THIS DRAWING IS THE PROPERTY OF ANALOG DEVICES INC. IT IS NOT TO BE REPRODUCED OR COPIED, IN WHOLE OR IN PART, OR USED IN FURNISHING INFORMATION TO OTHERS, OR FOR ANY OTHER PURPOSE DETRIMENTAL TO THE INTERESTS OF ANALOG DEVICES.
THE EQUIPMENT SHOWN HEREON MAY BE PROTECTED BY PATENTS OWNED OR CONTROLLED BY ANALOG DEVICES.

RELAY CONTROL CHART

CONTROL	CODE	DEVICE	FUNCTION	CONNECTOR

JUMPER TABLE

JP#	ON	OFF
1		
2		
3		
4		
5		

* SEE ASSEMBLY INSTRUCTIONS

REVISIONS

REV	DESCRIPTION	DATE	APPROVED
A	INITIAL RELEASE	10MAY19	H.N.
B	PER ECR-092781	07FEB20	H.N.
C	PER ECR-097572	17AUG20	H.N.
C1	PER ECR-098120	03SEP20	H.N.

P.O SPEC.	BK/BD SPEC.	SOCKET OEM	OEM PART#	HANDLER

	DATE
TEMPLATE ENGINEER -	
HARDWARE SERVICES -	
HARDWARE SYSTEMS -	
TEST ENGINEER -	
COMPONENT ENGINEER -	
TEST PROCESS -	
HARDWARE RELEASE -	
DESIGNER M. LAGO	07FEB20
PTD ENGINEER H. NGUYEN	07FEB20
CHECKER -	

SCHEMATIC

ANALOG DEVICES

HW TYPE : Customer Evaluation Z
Product(s): ADL8150
: ADL8150
PACKAGE : 16-lead 3X3X0.75 LFCSP-family
: Pitch-pitch StyleVendor Style
<User Define>
<User Define>
<User Define>

MASTER PROJECT TEMPLATE: TBD
TESTER TEMPLATE: no_template

UNLESS OTHERWISE SPECIFIED DIMENSIONS ARE IN INCHES
TOLERANCES
DECIMALS X.XX +-0.010 X.XXX +-0.005
FRACTIONS +-1/32
ANGLES +-2

DRAWING NO. 02_057554
REV. C1
SIZE D | SCALE 1:1 | CODE ID NO. CodeID | SHEET 1 OF 2

REVISIONS			
REV	DESCRIPTION	DATE	APPROVED

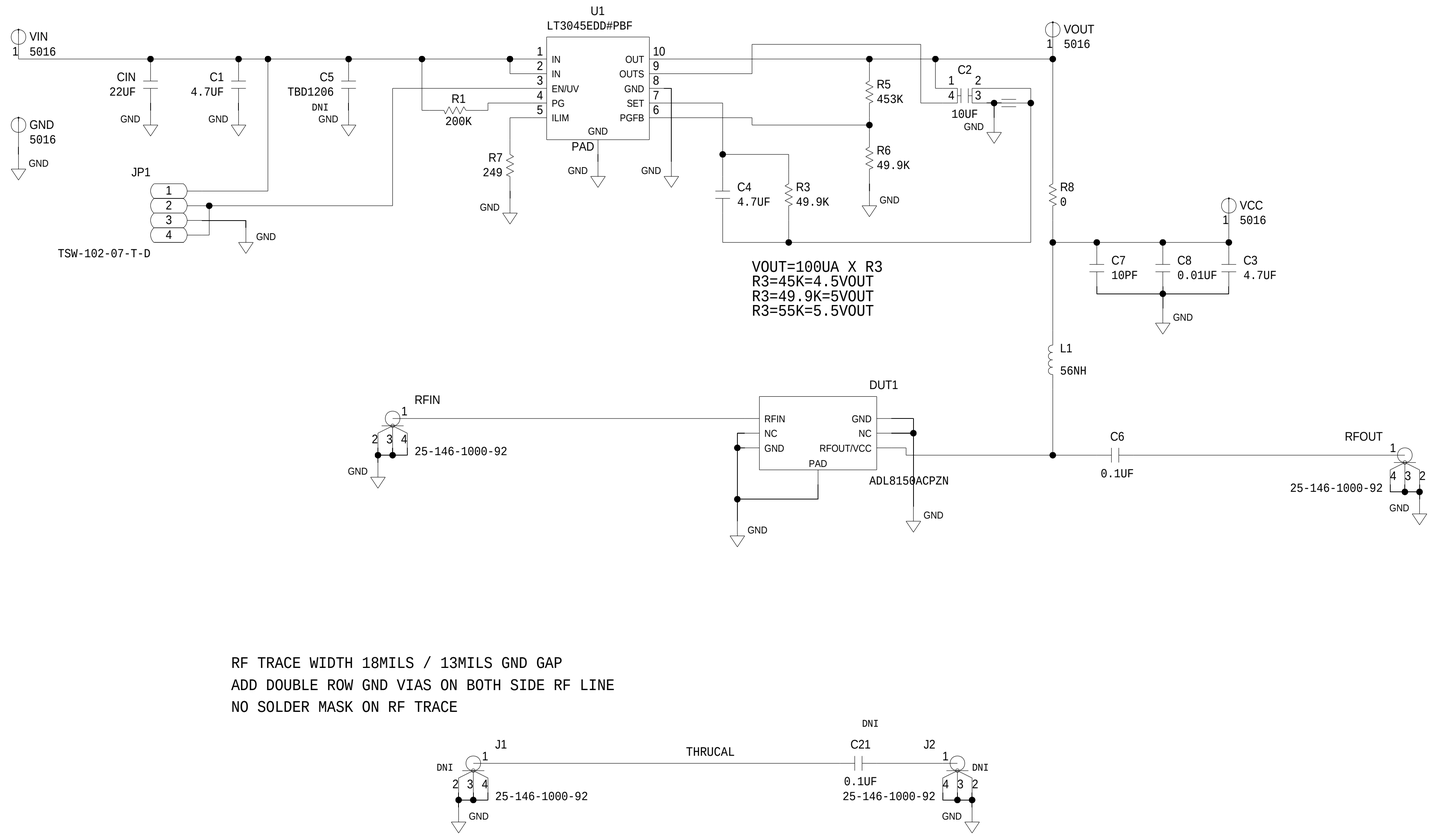

RF TRACE WIDTH 18MILS / 13MILS GND GAP
ADD DOUBLE ROW GND VIAS ON BOTH SIDE RF LINE
NO SOLDER MASK ON RF TRACE

ANALOG DEVICES

SCHEMATIC

HW TYPE : Customer Evaluation Z
Product(s): ADL8150
: ADL8150

THIS DRAWING IS THE PROPERTY OF ANALOG DEVICES INC.
IT IS NOT TO BE REPRODUCED OR COPIED, IN WHOLE OR
IN PART, OR USED IN FURNISHING INFORMATION TO OTHERS,
OR FOR ANY OTHER PURPOSE DETRIMENTAL TO THE INTERESTS
OF ANALOG DEVICES.
THE EQUIPMENT SHOWN HEREON MAY BE PROTECTED BY PATENTS
OWNED OR CONTROLLED BY OWNED ANALOG DEVICES.

DESIGN VIEW	DRAWING NO.	REV
<DESIGN_VIEW>	02_057554	C1

PTD ENGINEER	SIZE	SCALE	SHEET
H. NGUYEN	D	1:1	SHEET 2 OF 2