THIS DRAWING IS THE PROPERTY OF ANALOG DEVICES INC. IT IS NOT TO BE REPRODUCED OR COPIED, IN WHOLE OR IN PART, OR USED IN FURNISHING INFORMATION TO OTHERS, OR FOR ANY OTHER PURPOSE DETRIMENTAL TO THE INTERESTS OF ANALOG DEVICES.
THE EQUIPMENT SHOWN HEREON MAY BE PROTECTED BY PATENTS OWNED OR CONTROLLED BY ANALOG DEVICES.

RELAY CONTROL CHART

CONTROL	CODE	DEVICE	FUNCTION	CONNECTOR

P.O SPEC.	BK/BD SPEC.	SOCKET OEM	OEM PART#	HANDLER

JUMPER TABLE

JP#	ON	OFF
1		
2		
3		
4		
5		

* SEE ASSEMBLY INSTRUCTIONS

REVISIONS

REV	DESCRIPTION	DATE	APPROVED
A	INITIAL RELEASE	03/2018	H.N.
B	AS PER ECR-085849	26MAR18	H.NGUYEN
B1	AS PER ECR-086787	25APR19	V. MANLAPAZ
C	AS PER ECR-090778	24OCT19	V. MANLAPAZ

		DATE
TEMPLATE ENGINEER	-	
HARDWARE SERVICES	-	
HARDWARE SYSTEMS	-	
TEST ENGINEER	-	
COMPONENT ENGINEER	-	
TEST PROCESS	-	
HARDWARE RELEASE	-	
DESIGNER	J.AHEARN	03/2018
PTD ENGINEER	H.NGUYEN	03/2018
CHECKER	-	

SCHEMATIC

ANALOG DEVICES

HW TYPE : Customer Evaluation
Product(s): ADPA7005
: ADPA7007AEHZ
PACKAGE : 18-lead 7X7X1.92 LFCSP_CAV-family
: Pitch-pitch StyleVendor Style

<User Define>
<User Define>
<User Define>

MASTER PROJECT TEMPLATE: TBD
TESTER TEMPLATE: no_template

UNLESS OTHERWISE SPECIFIED DIMENSIONS ARE IN INCHES
TOLERANCES
DECIMALS: X.XX +-0.010, X.XXX +-0.005
FRACTIONS: +-1/32
ANGLES: +-2

DRAWING NO. 02_049184
REV. C

SIZE D | SCALE 1:1 | CODE ID NO. CodeID | SHEET 1 OF 2

REVISIONS			
REV	DESCRIPTION	DATE	APPROVED

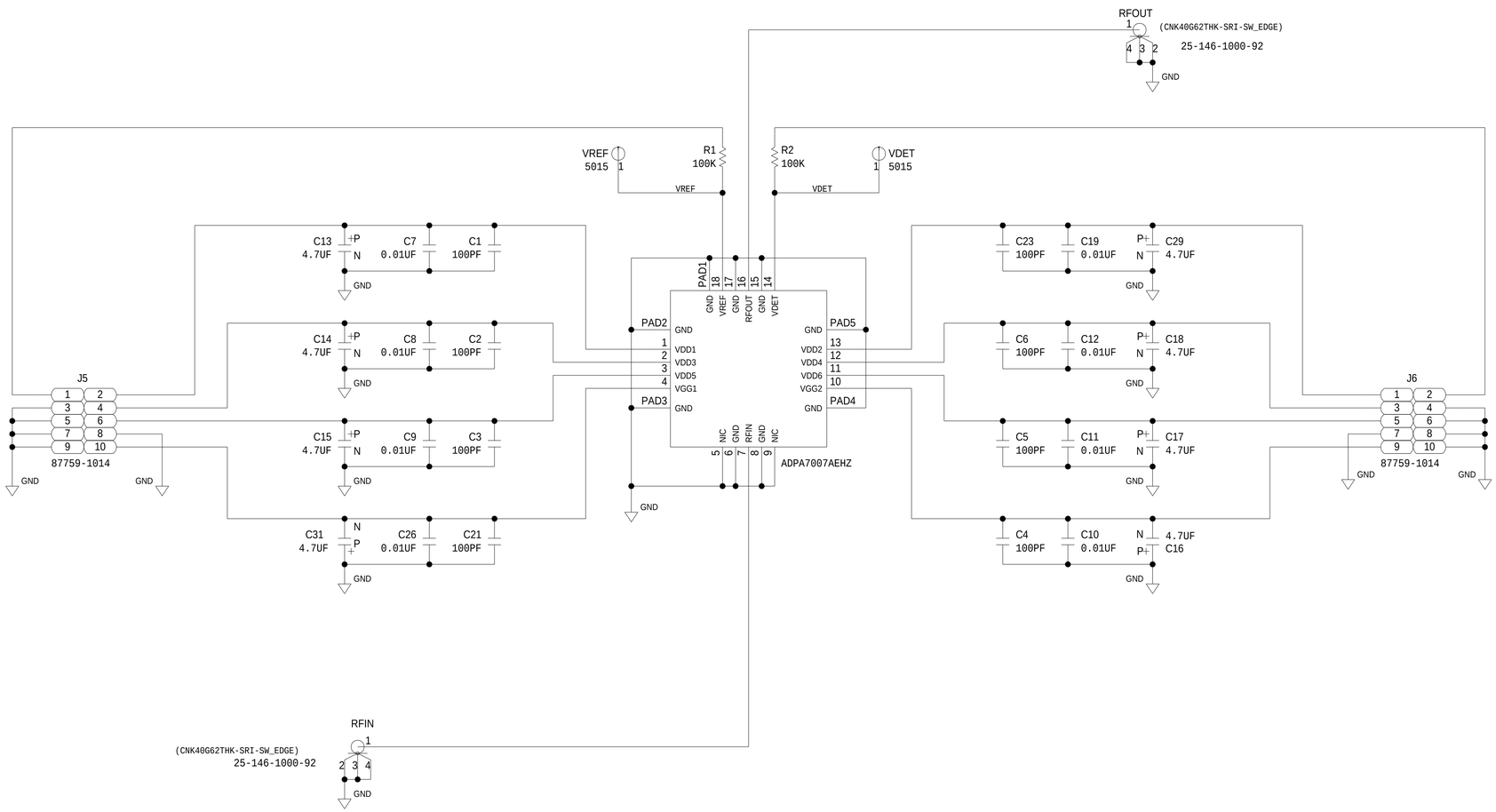

ANALOG DEVICES

SCHEMATIC

HW TYPE : Customer Evaluation
Product(s): ADPA7005
: ADPA7007AEHZ

THIS DRAWING IS THE PROPERTY OF ANALOG DEVICES INC.
IT IS NOT TO BE REPRODUCED OR COPIED, IN WHOLE OR
IN PART, OR USED IN FURNISHING INFORMATION TO OTHERS,
OR FOR ANY OTHER PURPOSE DETRIMENTAL TO THE INTERESTS
OF ANALOG DEVICES.
THE EQUIPMENT SHOWN HEREON MAY BE PROTECTED BY PATENTS
OWNED OR CONTROLLED BY OWNED ANALOG DEVICES.

DESIGN VIEW	DRAWING NO.	REV
<DESIGN_VIEW>	02_049184	C

PTD ENGINEER	SIZE	SCALE	SHEET 2 OF 2
H.NGUYEN	D	1:1	