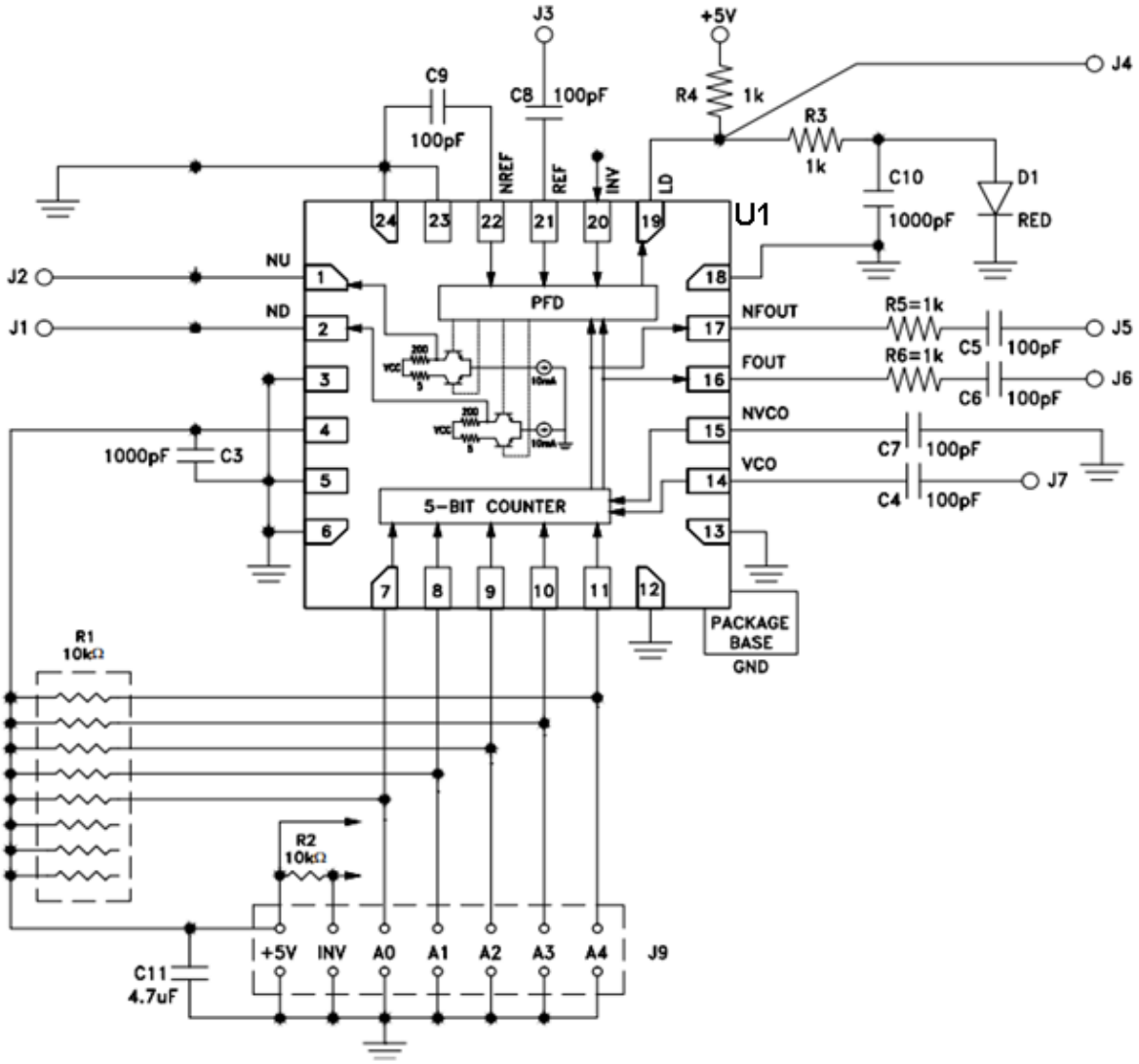Schematic EV1HMC4069LP4