REVISION HISTORY				
ECO	REV	DESCRIPTION	APPROVED	DATE
–	1	PRODUCTION	EDWIN L.	04-20-11

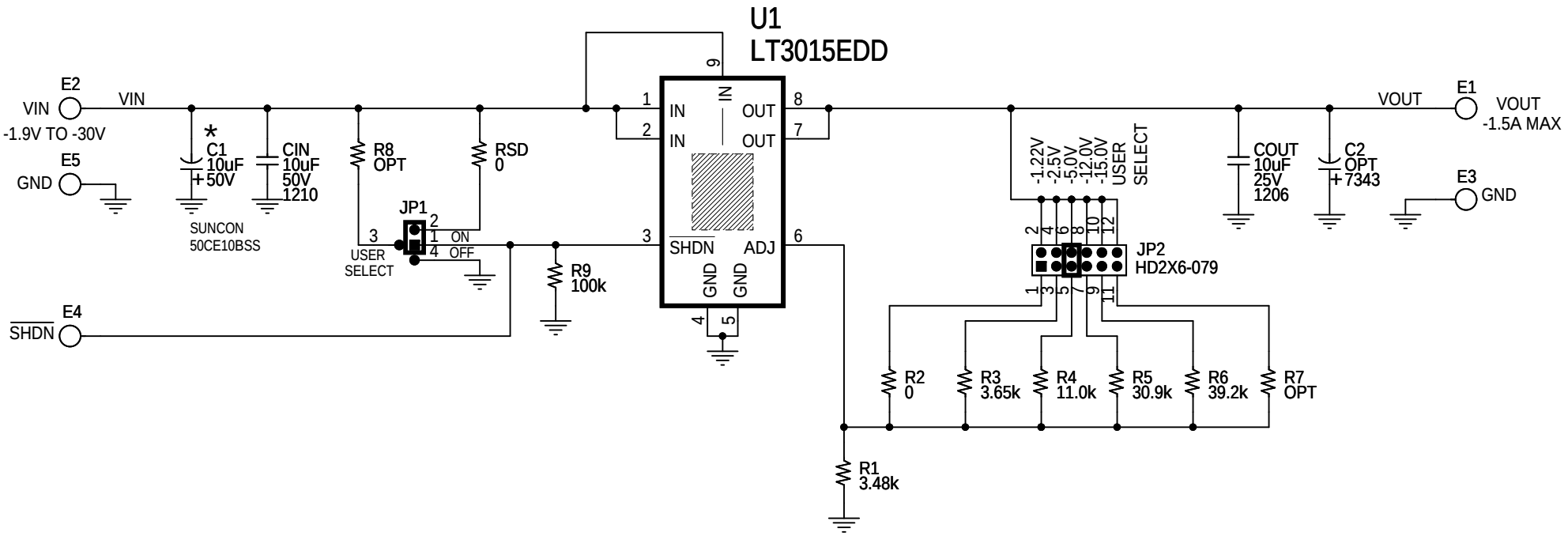

* CAPACITOR C1 IS AN OPTIONAL PART. IT WAS INSERTED ON THE DC1728A TO DAMPEN THE (POSSIBLE) RINGING VOLTAGE DUE TO THE USE OF LONG INPUT LEADS. ON A NORMAL, TYPICAL PCB, WITH SHORT TRACES, THE CAPACITOR IS NOT NEEDED. SEE APPLICATION NOTE AN88 FOR MORE DETAILS.

NOTES: UNLESS OTHERWISE SPECIFIED

1. ALL RESISTORS ARE IN OHMS, 0402.
   ALL CAPACITORS ARE IN MICROFARADS.
2. INSTALL SHUNTS AS SHOWN.

CUSTOMER NOTICE

LINEAR TECHNOLOGY HAS MADE A BEST EFFORT TO DESIGN A CIRCUIT THAT MEETS CUSTOMER-SUPPLIED SPECIFICATIONS; HOWEVER, IT REMAINS THE CUSTOMER'S RESPONSIBILITY TO VERIFY PROPER AND RELIABLE OPERATION IN THE ACTUAL APPLICATION. COMPONENT SUBSTITUTION AND PRINTED CIRCUIT BOARD LAYOUT MAY SIGNIFICANTLY AFFECT CIRCUIT PERFORMANCE OR RELIABILITY. CONTACT LINEAR TECHNOLOGY APPLICATIONS ENGINEERING FOR ASSISTANCE.

THIS CIRCUIT IS PROPRIETARY TO LINEAR TECHNOLOGY AND SUPPLIED FOR USE WITH LINEAR TECHNOLOGY PARTS.

APPROVALS	
PCB DES.	KT
APP ENG.	EDWIN L.

SCALE = NONE

LINEAR TECHNOLOGY
1630 McCarthy Blvd.
Milpitas, CA 95035
Phone: (408)432-1900 www.linear.com
Fax: (408)434-0507
LTC Confidential-For Customer Use Only

TITLE: SCHEMATIC

1.5A, LOW NOISE, NEGATIVE REGULATOR WITH PRECISION CURRENT LIMIT

SIZE	IC NO.	REV.
N/A	LT3015EDD DEMO CIRCUIT 1728A	1

DATE: Wednesday, April 20, 2011

SHEET 1 OF 1