THIS DRAWING IS THE PROPERTY OF ANALOG DEVICES INC. IT IS NOT TO BE REPRODUCED OR COPIED, IN WHOLE OR IN PART, OR USED IN FURNISHING INFORMATION TO OTHERS, OR FOR ANY OTHER PURPOSE DETRIMENTAL TO THE INTERESTS OF ANALOG DEVICES.
THE EQUIPMENT SHOWN HEREON MAY BE PROTECTED BY PATENTS OWNED OR CONTROLLED BY ANALOG DEVICES.

## RELAY CONTROL CHART

| CONTROL | CODE | DEVICE | FUNCTION | CONNECTOR |
|---|---|---|---|---|
| | | | | |
| | | | | |
| | | | | |

| REVISIONS | | | |
|---|---|---|---|
| REV | DESCRIPTION | DATE | APPROVED |
| | | | |

# LT3470A INVERTING

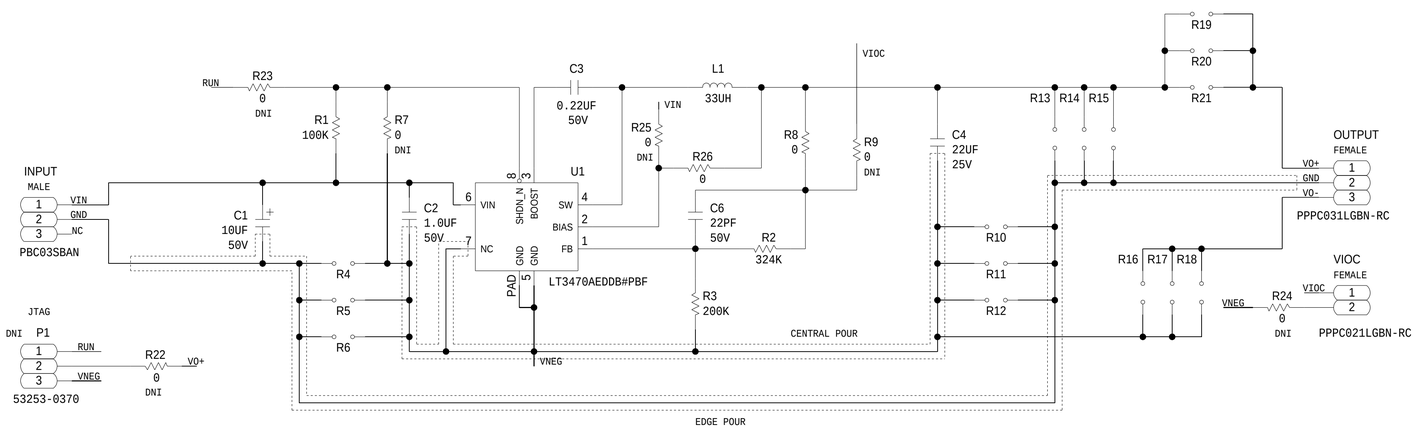


ANALOG DEVICES

THIS DRAWING IS THE PROPERTY OF ANALOG DEVICES INC.
IT IS NOT TO BE REPRODUCED OR COPIED, IN WHOLE OR
IN PART, OR USED IN FURNISHING INFORMATION TO OTHERS,
OR FOR ANY OTHER PURPOSE DETRIMENTAL TO THE INTERESTS
OF ANALOG DEVICES.
THE EQUIPMENT SHOWN HEREON MAY BE PROTECTED BY PATENTS
OWNED OR CONTROLLED BY OWNED ANALOG DEVICES.

SCHEMATIC

HW TYPE : SCP EVAL-Z
Product(s): LT3470A
: LT3470A

| DESIGN VIEW | DRAWING NO. | REV |
|---|---|---|
| <DESIGN_VIEW> | 02_051162 | C |

| PTD ENGINEER | SIZE | SCALE | SHEET 2 OF 2 |
|---|---|---|---|
| J VIERNES | D | 1:1 | |