1816B_Rev1.pcb - Fri Jul 26 08:37:06 2013

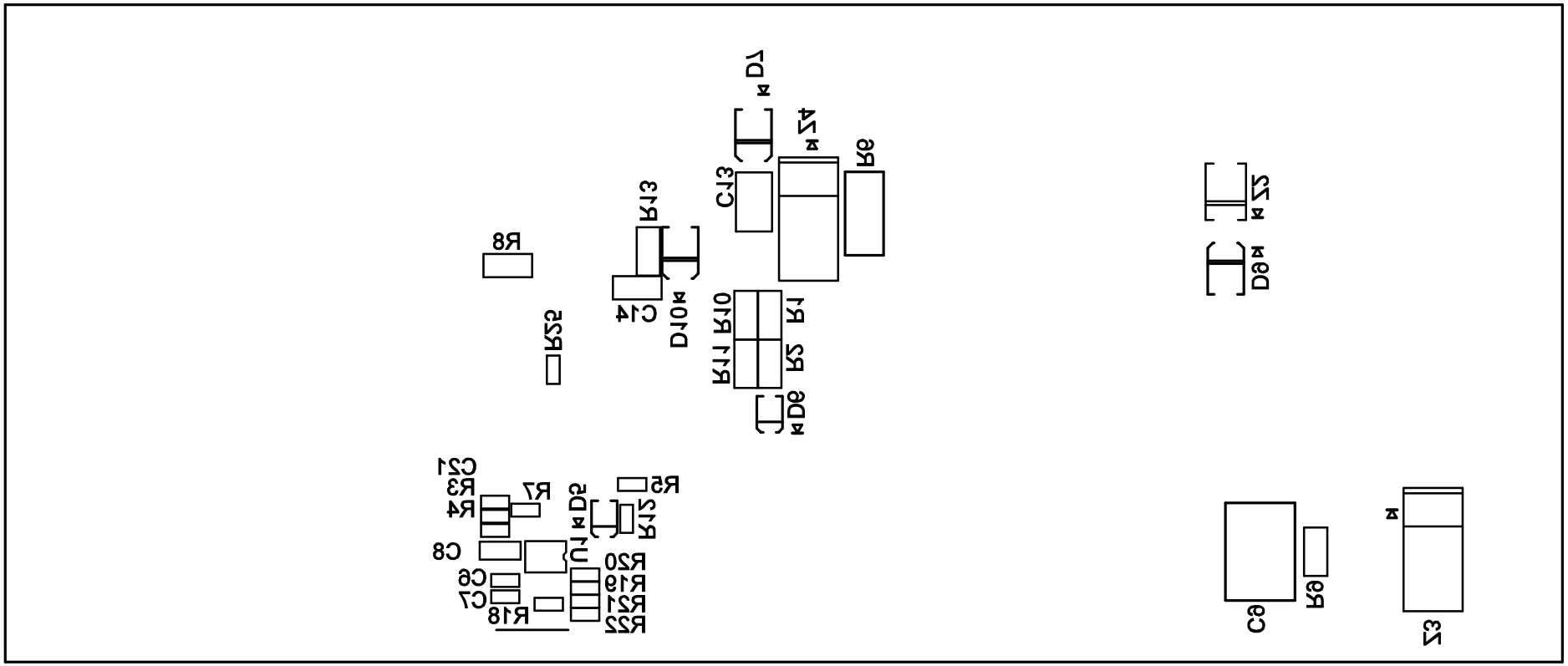

LINEAR TECHNOLOGY CORPORATION

DC1816B REV 1 DATE: Apr 08, 2013

BTTM SILKSCREEN