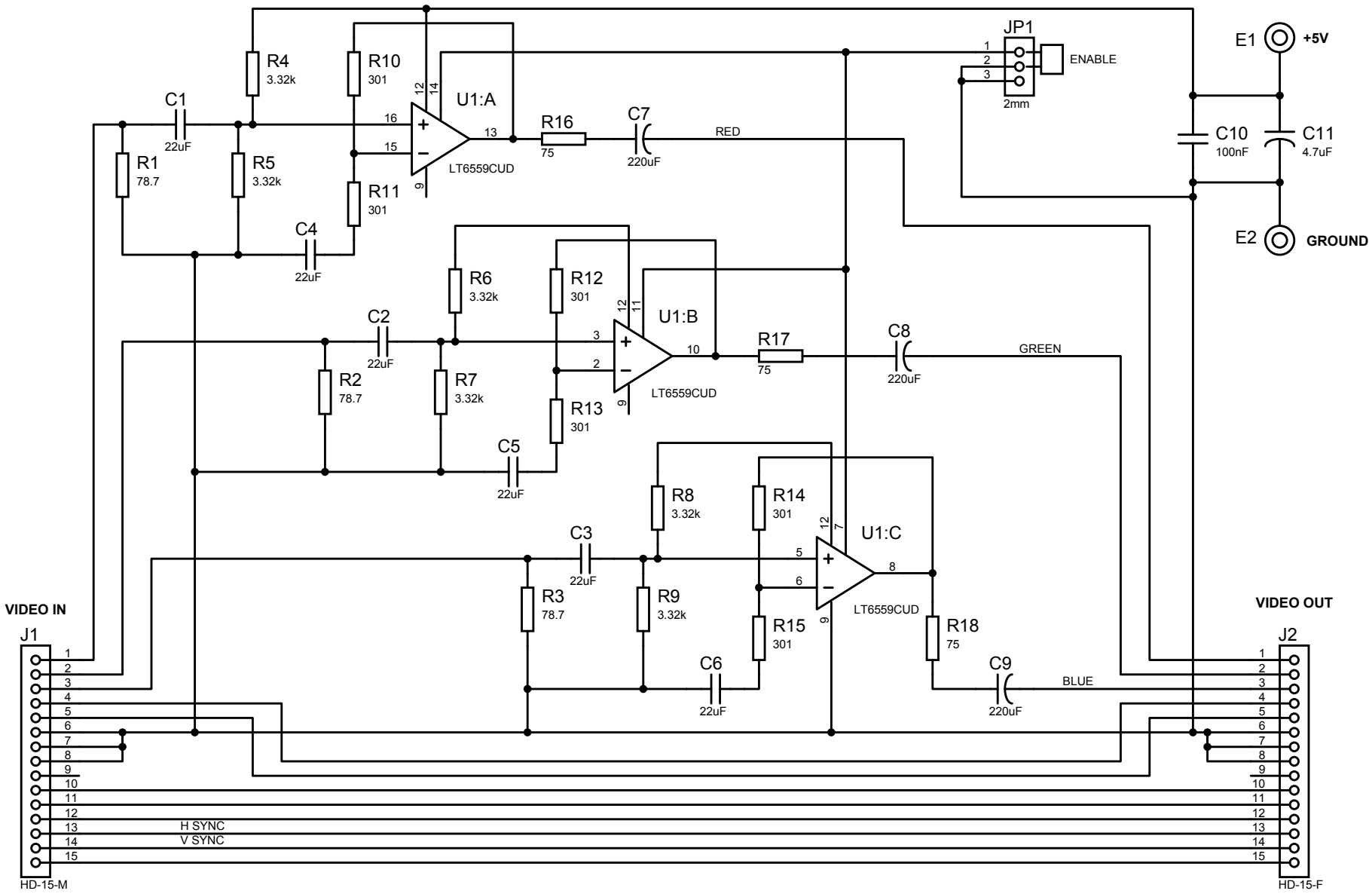

FILE NAME:	LT6559demo.DSN	DATE:	3/27/2006
DESIGN TITLE:	DC1063A	PAGE:	1 of 1
PATH:	C:\Projects\Applications\DC1063_LT6559\LT6559demo.DSN		
BY: J. Munson	REV: A	TIME: 1:51:30 PM	