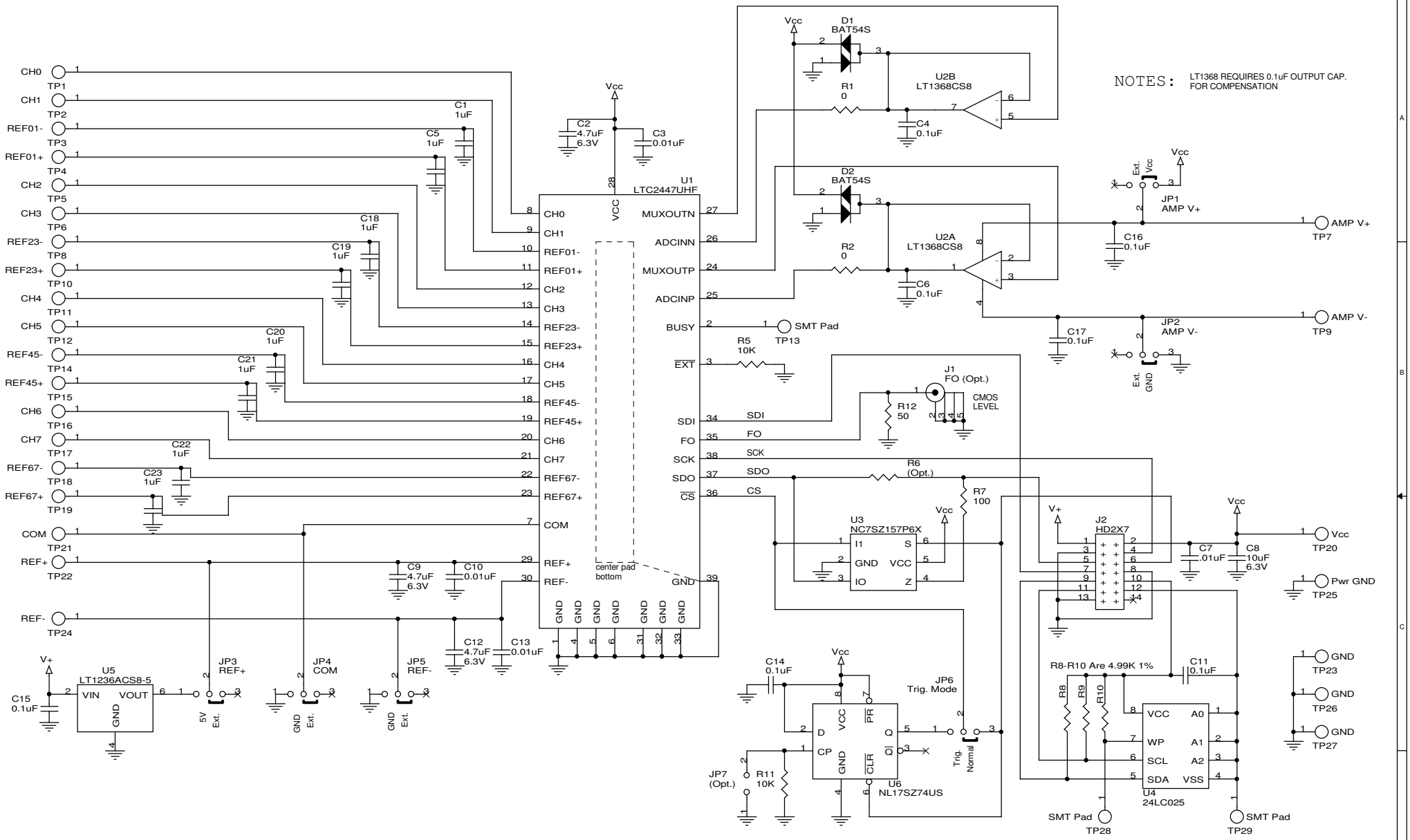

NOTES:

LTC CONFIDENTIAL - FOR CUSTOMER USE ONLY

Customer Notice

Linear Technology Has Made A Best Effort To Design A Circuit That Meets Customer-Supplied Specifications; However, It Remains The Customer's Responsibility To Verify Proper And Reliable Operation In The Actual Application. Component Substitution And Printed Circuit Board Layout May Significantly Affect Circuit Performance Or Reliability. Contact Linear Technology Applications Engineering For Assistance.

This Circuit Is Proprietary To Linear Technology And Supplied For Use With Linear Technology Parts.

LINEAR TECHNOLOGY CORPORATION
1630 McCARTHY BLVD.
MILPITAS, CA. 95035-7487
VOICE (408) 432-1900 FAX (408) 434-0507

Title: 24-Bit High Speed 4-/8-Channel Delta Sigma ADC

Size | Document Number: Demo Circuit 846A LTC2447UHF | Rev

Date: Wednesday, November 24, 2004 | Sheet 1 of 1