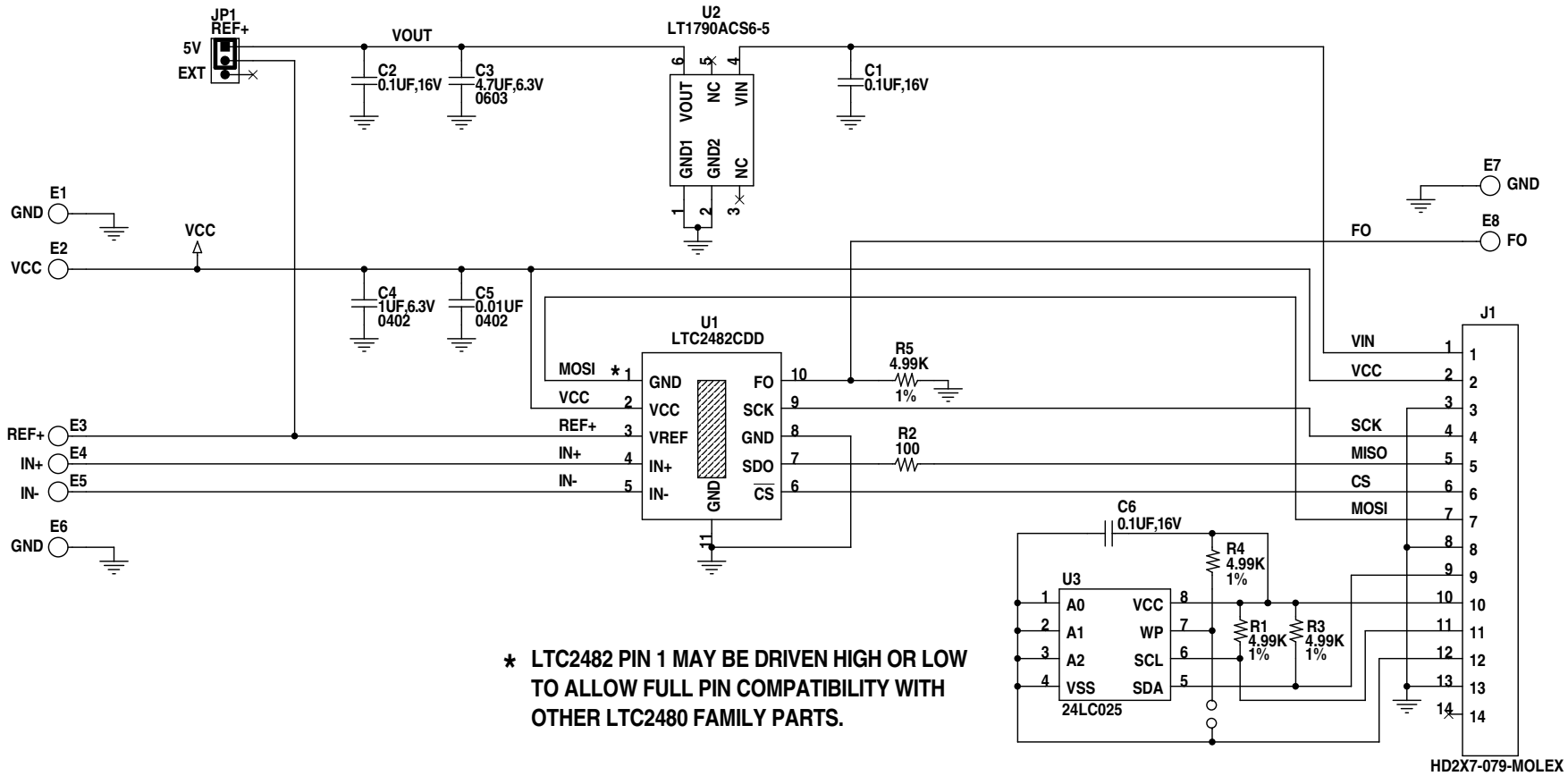

* LTC2482 PIN 1 MAY BE DRIVEN HIGH OR LOW TO ALLOW FULL PIN COMPATIBILITY WITH OTHER LTC2480 FAMILY PARTS.

NOTES: UNLESS OTHERWISE SPECIFIED

1. ALL RESISTORS ARE IN OHMS, 0402.
   ALL CAPACITORS ARE 0402.
2. INSTALL SHUNT ON JP1-JP2 PIN 1 AND 2.

CUSTOMER NOTICE

LINEAR TECHNOLOGY HAS MADE A BEST EFFORT TO DESIGN A CIRCUIT THAT MEETS CUSTOMER-SUPPLIED SPECIFICATIONS; HOWEVER, IT REMAINS THE CUSTOMER'S RESPONSIBILITY TO VERIFY PROPER AND RELIABLE OPERATION IN THE ACTUAL APPLICATION. COMPONENT SUBSTITUTION AND PRINTED CIRUIT BOARD LAYOUT MAY SIGNIFICANTLY AFFECT CIRCUIT PERFORMANCE OR RELIABILITY. CONTACT LINEAR TECHNOLOGY APPLICATIONS ENGINEERING FOR ASSISTANCE.

THIS CIRCUIT IS PROPRIETARY TO LINEAR TECHNOLOGY AND SUPPLIED FOR USE WITH LINEAR TECHNOLOGY PARTS.

CONTRACT NO.

APPROVALS

DRAWN: KIM T.

CHECKED:

APPROVED:

ENGINEER: MARK T.

DESIGNER:

LINEAR TECHNOLOGY

1630 McCarthy Blvd.
Milpitas, CA 95035
Phone: (408)432-1900
Fax: (408)434-0507
LTC Confidential-For Customer Use Only

TITLE: SCHEMATIC

16-BIT DELTA SIGMA ADC

SIZE	DWG NO.	REV
A	DC941A * LTC2482CDD	A

DATE: Wednesday, June 15, 2005

SHEET 1 OF 1