REVISIONS			
REV		APPR	DATE

Silkscreen Top

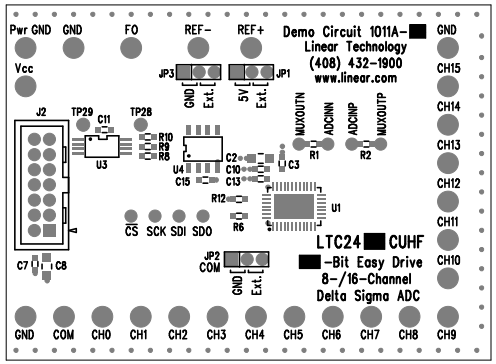

Install Shunts on JP1 = 5V
JP2 = Gnd
JP3 = Ext.

Table

ASSEMBLY	U1	BITS
DC1011A-A	LTC2498CUHF	24
DC1011A-B	LTC2496CUHF	16
DC1011A-C	LTC2494CUHF	16/PGA

NOTES :

1. Unused SMD components should be free of Solder.
2. Fill up all vias with solder.

Assembly Drawing Top

APPROVALS	INIT	DATE
DRAWN		
CHECK		
DESIGN		
ENGR		
Scale = None		

LINEAR TECHNOLOGY
1630 McCarthy Blvd.
Milpitas, CA 95035
PH: (408)432-1900

Title: 24-/16-Bit Easy Drive
8-/16-Channel Delta Sigma ADC

Size:	Demo Board:	Rev.
None	DC1011A-A/B/C	A

Design # | Sht: 1 of 1