REVISION HISTORY				
ECO	REV	DESCRIPTION	APPROVED	DATE
-	03	PRODUCTION	KY	3-30-2020

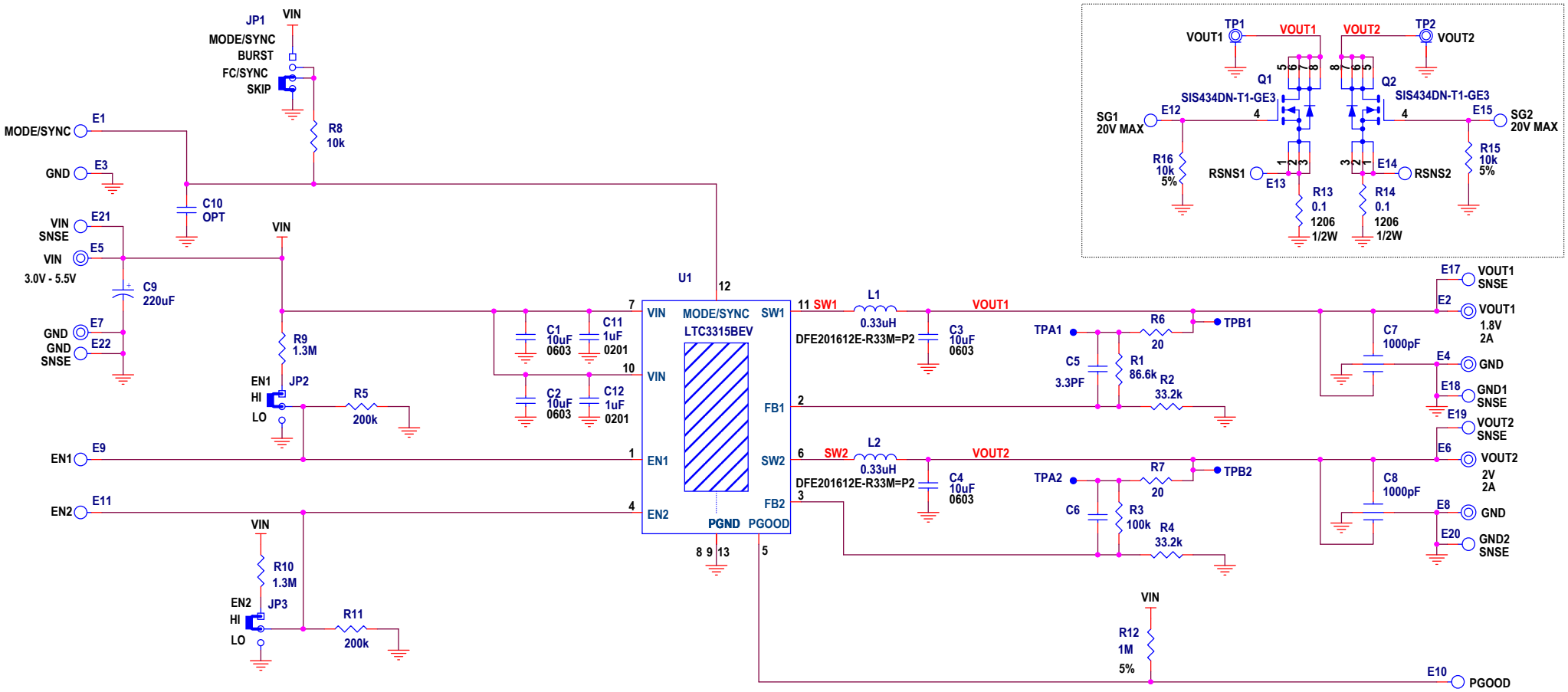

PCA ADDITIONAL PARTS

MP1	STANDOFF,NYLON,SNAP-ON,0.25" (6.4mm)
MP2	STANDOFF,NYLON,SNAP-ON,0.25" (6.4mm)
MP3	STANDOFF,NYLON,SNAP-ON,0.25" (6.4mm)
MP4	STANDOFF,NYLON,SNAP-ON,0.25" (6.4mm)
LB1	LABEL
STNCL1	TOOL, STENCIL, 700-DC2748A REV03
PCB1	PCB, DC2748A REV03

NOTES: UNLESS OTHERWISE SPECIFIED
1. RESISTORS: OHMS, 0402, 1%, 1/16W
2. CAPACITORS: 0402

CUSTOMER NOTICE

LINEAR TECHNOLOGY HAS MADE A BEST EFFORT TO DESIGN A CIRCUIT THAT MEETS CUSTOMER-SUPPLIED SPECIFICATIONS; HOWEVER, IT REMAINS THE CUSTOMER'S RESPONSIBILITY TO VERIFY PROPER AND RELIABLE OPERATION IN THE ACTUAL APPLICATION. COMPONENT SUBSTITUTION AND PRINTED CIRCUIT BOARD LAYOUT MAY SIGNIFICANTLY AFFECT CIRCUIT PERFORMANCE OR RELIABILITY. CONTACT LINEAR TECHNOLOGY APPLICATIONS ENGINEERING FOR ASSISTANCE.

THIS CIRCUIT IS PROPRIETARY TO LINEAR TECHNOLOGY AND SUPPLIED FOR USE WITH LINEAR TECHNOLOGY PARTS.

APPROVALS	
PCB DES.	NC
APP ENG.	KY

SCALE = NONE

ANALOG DEVICES
POWER BY LINEAR™
www.analog.com

TITLE: SCHEMATIC
3V TO 5.5V, DUAL 6MHz, 2A
SYNCHRONOUS STEP-DOWN DC/DCs

SIZE | IC NO. LTC3315B | REV. 03
DEMO CIRTCUIT DC2748A

DATE: 3-30-2020 | SHEET 1 OF 1