DESCRIPTION

Demonstration circuit DC1429A is a high efficiency step-down DC/DC converter featuring LTC3642 with internal high side and synchronous power switches that draws only 10µA quiescent current. It has a wide 4.5V to 45V input range and internal over voltage monitor capable of protecting the part through 60V surges. The jumper selectable output is up to 5V. LTC3642 can supply up to 50mA load current with a programmable peak current limit that provides a simple method for optimizing efficiency in lower current applications. With no compensation required, LTC3642 is easily configured with minimal components. **Gerber files for this circuit are available. Call the LTC Factory.**

Table 1. Performance Summary (T_A = 25ºC)

PARAMETER	CONDITION	VALUE
Input Voltage		4.5V to 45V
Output Voltage V_{OUT}	I_{OUT}=1mA to 50mA, V_{IN}=10V	V_{OUT} ± 2.7% (LTC3642 Output adjustable version) V_{OUT} ± 1.3% (LTC3642-3.3 Fixed 3.3V version) V_{OUT} ± 1.3% (LTC3642-5 Fixed 5.0V version)
Maximum Output Current		50mA
DC Supply Current	Active Mode, V_{IN}=10V, I_O=0A	110µA
Nominal Switching Frequency	Inductance=100µH, V_{IN}=30V	350kHz

QUICK START PROCEDURE

The DC1429A is easy to set up to evaluate the performance of the LTC3642. For a proper measurement equipment configuration, set up the circuit according to the diagram in Figure 2.

NOTE: When measuring the input or output voltage ripple, care must be taken to avoid a long ground lead on the oscilloscope probe. Measure the input or output voltage ripple by touching the probe tip directly across the V_{IN} or V_{OUT} and GND terminals. See the Measurement Equipment Setup diagram in Figure 1 for proper scope probe technique. To reduce the output voltage ripple further additional capacitor of 100µF can be added in parallel.

Please follow the procedure outlined below for proper operation.

1. Connect the input power supply to the V_{IN} and GND terminals. Connect the load between the V_{OUT} and GND terminals. Refer to Figure 2 for the proper measurement equipment setup.

2. Before proceeding to operation, insert jumper shunt XJP1 into the OFF position and insert jumper shunt into XJP2, XJP3 or XJP4 for voltages of 1.8V, 3.3V or 5V respectively. Set the load output current to 20 mA.

3. Apply 6V at V_{IN}. Measure V_{OUT}; it should read 0V. If desired, one can measure the shutdown supply current at this point. The supply current will be about 3 µA in shutdown.

4. Turn on V_{OUT} by changing shunt XJP1 from the OFF position to the ON position. The out-

put voltage should measure according to the voltage set by the shunt jumper in XJP2, XJP3 or XJP4.

5. Vary the input voltage from 6V to 45V.

6. Vary the V_{OUT} load current from 1mA to 50mA, and the output voltage should be within a tolerance of ± 2.7%.

Warning - If the power for the demo board is carried in long leads, the input voltage at the part could "ring", which could affect the operation of the circuit or even exceed the maximum voltage rating of the IC. To eliminate the ringing, insert an electrolytic capacitor (for instance, Panasonic part # EEU-FC2A680L, 68µF/100V) on the pads between the input power and return terminals on the bottom of the demo board. The (greater) ESR of the electrolytic will dampen the (possible) ringing voltage due to the use of long input leads. On a normal, typical PCB, with short traces, the capacitor is not needed.

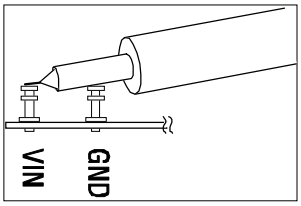

Figure 1. Measuring Input or Output Ripple

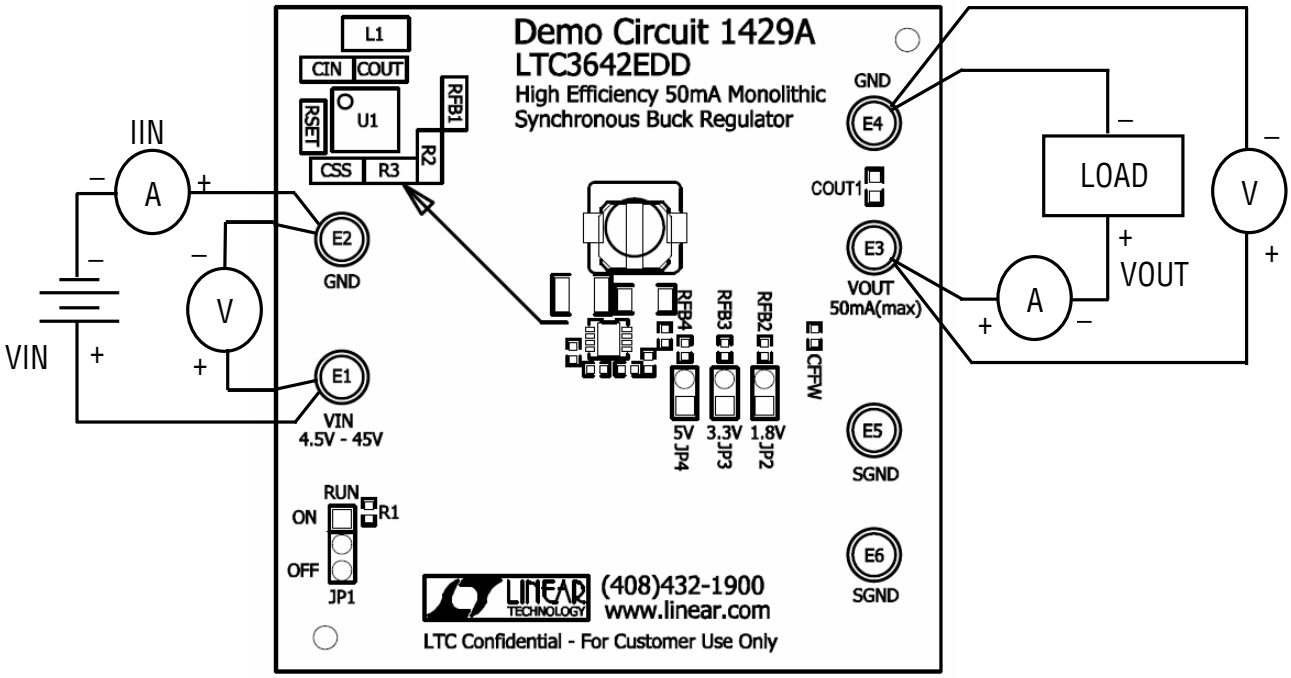

Figure 2. Equipment setup to test LTC3642

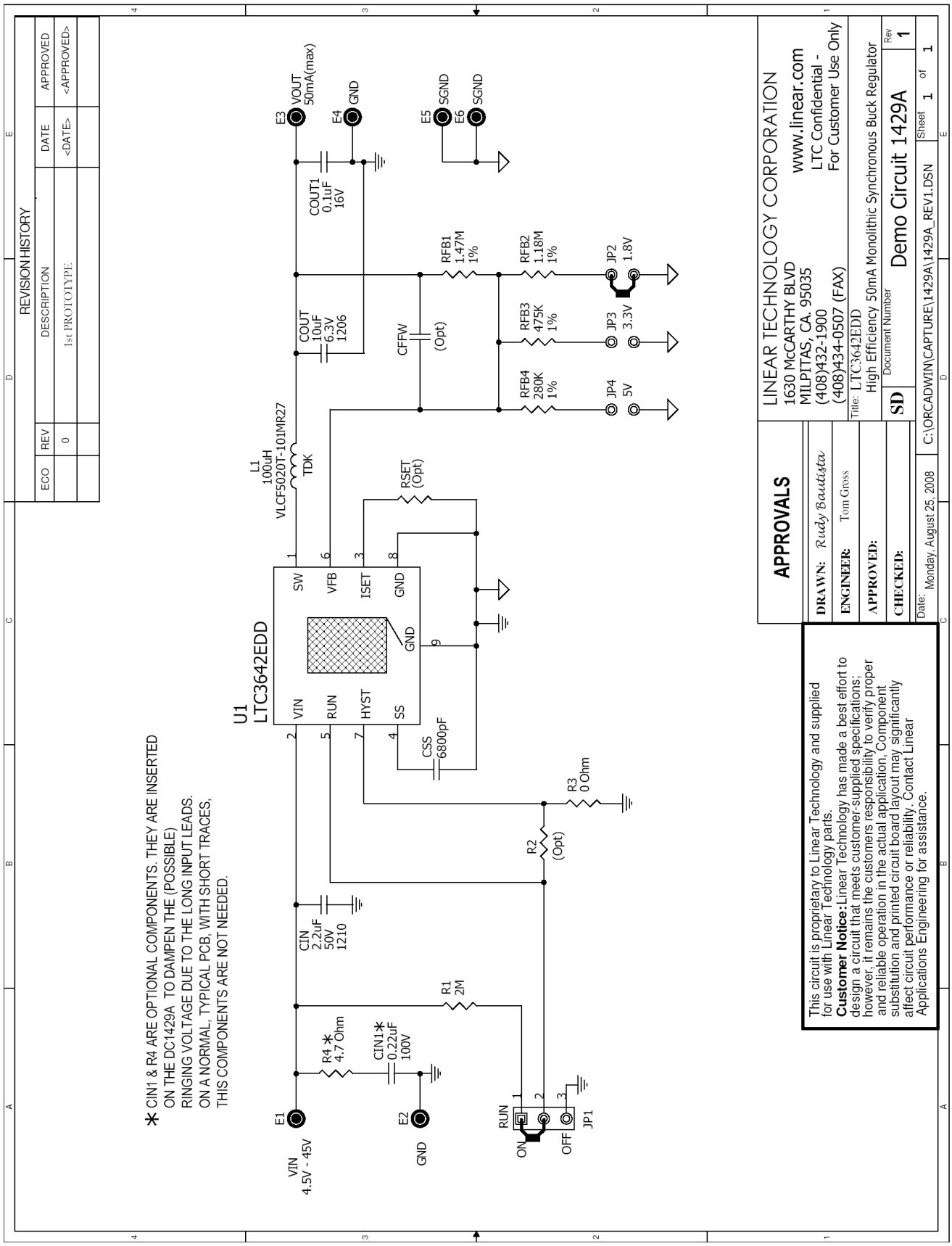
REVISION HISTORY
ECO
REV
DESCRIPTION
DATE
APPROVED
0
1st PROTOTYPE
<DATE>
<APPROVED>
U1
LTC3642EDD
VIN
RUN
HYST
SS
SW
VFB
ISET
GND
L1
100uH
VLCF5020T-101MR27
TDK
CIN
2.2uF
50V
1210
CIN1*
0.22uF
100V
R4 *
4.7 Ohm
R1
2M
R2
(Opt)
R3
0 Ohm
CSS
6800pF
RSET
(Opt)
COUT
10uF
6.3V
1206
COUT1
0.1uF
16V
CFFW
(Opt)
RFB1
1.47M
1%
RFB2
1.18M
1%
RFB3
475K
1%
RFB4
280K
1%
E1
VIN
4.5V - 45V
E2
GND
E3
VOUT
50mA(max)
E4
GND
E5
SGND
E6
SGND
JP1
RUN
ON
OFF
JP2
1.8V
JP3
3.3V
JP4
5V
* CIN1 & R4 ARE OPTIONAL COMPONENTS. THEY ARE INSERTED
ON THE DC1429A TO DAMPEN THE (POSSIBLE)
RINGING VOLTAGE DUE TO THE LONG INPUT LEADS.
ON A NORMAL, TYPICAL PCB, WITH SHORT TRACES,
THIS COMPONENTS ARE NOT NEEDED.
APPROVALS
DRAWN: Rudy Bautista
ENGINEER: Tom Gross
APPROVED:
CHECKED:
Date: Monday, August 25, 2008
LINEAR TECHNOLOGY CORPORATION
1630 McCARTHY BLVD
MILPITAS, CA. 95035
(408)432-1900
(408)434-0507 (FAX)
www.linear.com
LTC Confidential -
For Customer Use Only
Title: LTC3642EDD
High Efficiency 50mA Monolithic Synchronous Buck Regulator
SD
Document Number
Demo Circuit 1429A
Rev
1
C:\ORCADWIN\CAPTURE\1429A\1429A_REV1.DSN
Sheet 1 of 1
This circuit is proprietary to Linear Technology and supplied for use with Linear Technology parts.
Customer Notice: Linear Technology has made a best effort to design a circuit that meets customer-supplied specifications; however, it remains the customers responsibility to verify proper and reliable operation in the actual application, Component substitution and printed circuit board layout may significantly affect circuit performance or reliability. Contact Linear Applications Engineering for assistance.

Item	*Qty*	*Reference*	*Part Description*	*Manufacturer / Part #*
REQUIRED CIRCUIT COMPONENTS				
1	1	CIN	Cap., X5R 2.2uF 50V 20%	TDK C3225X5R1H225MB
2	1	COUT	Cap., X5R 10uF 6.3V 20%	TDK C3216X5R0J106M
3	1	COUT1	Cap., X7R 0.1uF 16V 20%	AVX 0603YC104MAT
4	1	CSS	Cap., X5R 6800pF 25V 20%	AVX 04023D682MAT2A
5	1	L1	Inductor, 100uH	TDK VLCF5020T-101MR27
6	1	RFB1	Res., Chip 1.47M 0.06W 1%	Vishay CRCW04021M47FKED
7	1	RFB2	Res., Chip 1.18M 0.06W 1%	Vishay CRCW04021M18FKED
8	1	R1	Res., Chip 2M 0.06W 5%	Vishay CRCW04022M00JNED
9	1	U1	I.C., Volt. Reg.	Linear Tech. Corp. LTC3642EDD
ADDITIONAL DEMO BOARD CIRCUIT COMPONENTS				
1	0	CFFW (Opt)	Cap., NPO 22pF 25V 10%	AVX 04023A220KAT2A
2	1	CIN1	Cap., X7R 0.22uF 100V 20%	AVX 12061C224MAT2A
3	1	R4	Res., Chip 4.7 Ohm 0.25W 5%	Vishay CRCW12064R70JNED
4	0	R2 (Opt)	Res., Chip 715K 0.06W 1%	Vishay CRCW0402715KFKED
5	1	R3	Res/Jumper, Chip 0 Ohm 1/16W 1 AMP	Vishay CRCW04020000Z0EA
6	1	RFB3	Res., Chip 475K 0.06W 1%	Vishay CRCW0402475KFKED
7	1	RFB4	Res., Chip 280K 0.06W 1%	Vishay CRCW0402280KFKED
8	0	RSET (Opt)	Res., 0402 TBD	
HARDWARE FOR DEMO BOARD ONLY				
1	6	E1,E2,E3,E4,E5,E6	Turret, Testpoint	Mill Max 2501-2-00-80-00-00-07-0
2	1	JP1	Headers, 3 Pins 2mm Ctrs.	Samtec TMM-103-02-L-S
3	3	JP2,JP3,JP4	Jumper, 2pins 2mm Ctrs.	Samtec TMM-102-02-L-S
4	2	XJP1,XJP2	Shunt, 2mm Ctrs.	Samtec 2SN-BK-G
5	1		FAB, PRINTED CIRCUIT BOARD	DEMO CIRCUIT 1429A
6	1		STENCIL	STENCIL