REVISION HISTORY				
ECO	REV	DESCRIPTION	DATE	APPROVED
	2	PROD	10/06/17	VK

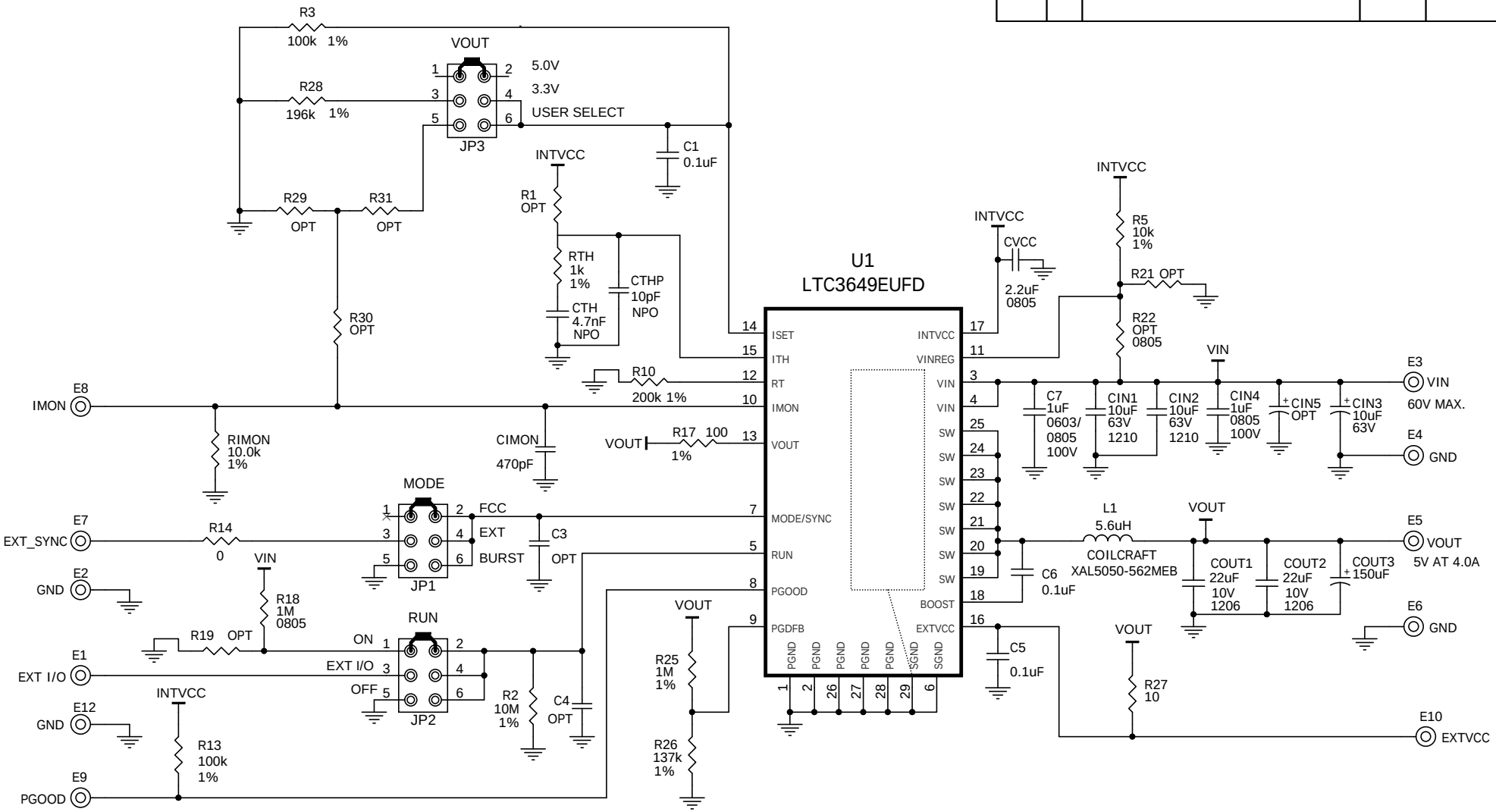

NOTES: UNLESS OTHERWISE SPECIFIED,

1. ALL CAPACITORS AND RESISTORS ARE 0603.
2. ALL RESISTORS ARE 5%.

CUSTOMER NOTICE

LINEAR TECHNOLOGY HAS MADE A BEST EFFORT TO DESIGN A CIRCUIT THAT MEETS CUSTOMER-SUPPLIED SPECIFICATIONS; HOWEVER, IT REMAINS THE CUSTOMER'S RESPONSIBILITY TO VERIFY PROPER AND RELIABLE OPERATION IN THE ACTUAL APPLICATION. COMPONENT SUBSTITUTION AND PRINTED CIRCUIT BOARD LAYOUT MAY SIGNIFICANTLY AFFECT CIRCUIT PERFORMANCE OR RELIABILITY. CONTACT LINEAR TECHNOLOGY APPLICATIONS ENGINEERING FOR ASSISTANCE.

THIS CIRCUIT IS PROPRIETARY TO LINEAR TECHNOLOGY AND SUPPLIED FOR USE WITH LINEAR TECHNOLOGY PARTS.

APPROVALS	
PCB DES.	MJ
APP ENG.	VK

SCALE = NONE

LINEAR TECHNOLOGY
1630 McCarthy Blvd.
Milpitas, CA 95035
Phone: (408)432-1900 www.linear.com
Fax: (408)434-0507

LTC CONFIDENTIAL - FOR CUSTOMER USE ONLY

TITLE: SCHEMATIC

HIGH VOLTAGE HIGH EFFICIENCY SYNCHRONOUS BUCK REGULATOR

SIZE	IC NO.	REV.
N/A	LTC3649EUFD28 DEMO CIRCUIT 2112A	2

DATE: Thursday, May 03, 2018 SHEET 1 OF 1