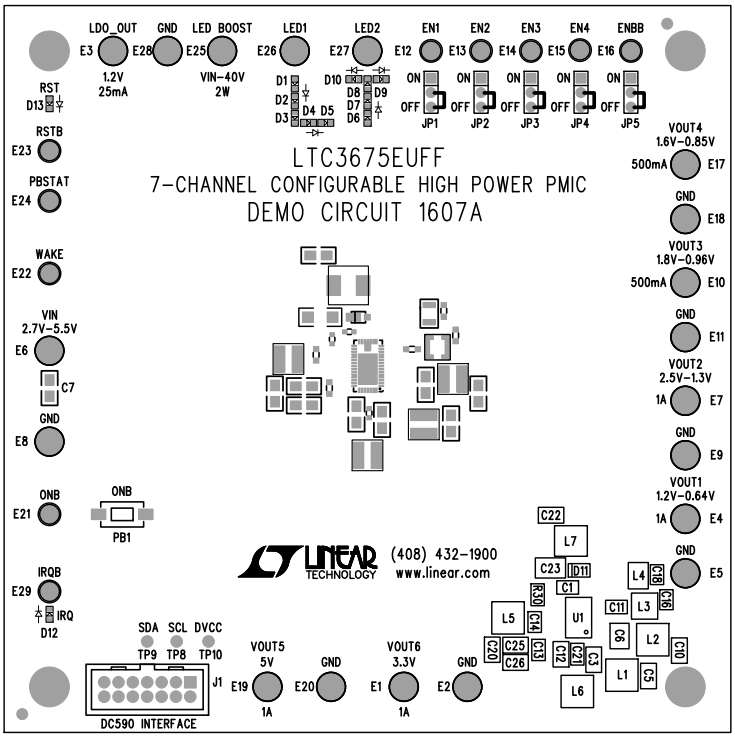

REVISION HISTORY				
ECO	REV	DESCRIPTION	APPR	DATE
–	1	PRODUCTION FAB	MARTY M.	06-16-10

NOTES: UNLESS OTHERWISE SPECIFIED

1. WORKMANSHIP SHALL BE IN ACCORDANCE WITH IPC-A-610.
2. ASSEMBLY PROCESS SHALL INCLUDE: REFLOW SOLDER TOP SIDE SMD.
3. PARTS TO OMIT WILL BE SPECIFIED ON THE BILL OF MATERIALS
   LOCATIONS OF OMITTED PARTS SHALL BE FREE OF SOLDER.
   MASK THE SOLDER STENCIL WHERE SMT PARTS ARE OMITTED.
4. INSTALL SHUNTS AS SHOWN ON ASSY DRAWING.
5. DEPANELIZE BOARDS AFTER ASSEMBLY AND ROUTE-OUT THE BREAKOUT TABS ON FOUR SIDES OF THE BOARD EDGE.
6. INSTALL TURRETS AS SHOWN BELOW:

(10 PLCS) : MILL-MAX 2308-2 AND (19 PLCS) : MILL-MAX 2501-2

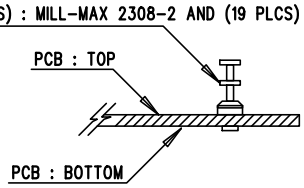

DIODE D11 ORIENTATION

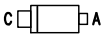

D1-10, D12 AND D13 LED PART ORIENTATION

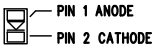

BOTTOM VIEW

TOP SILKSCREEN
LINEAR TECHNOLOGY
DC1607A-1 * LTC3675EUFF
7-CHANNEL CONFIGURABLE HIGH POWER PMIC
DATE: 06-16-10

APPROVALS		
	INIT	DATE
PCB DES.	NC	06-16-10
APP ENG.	MARTY M.	06-16-10
SCALE = NONE		

LINEAR TECHNOLOGY
1630 MCCARTHY BLVD
MILPITAS, CA 95035
PH: (408)432-1900
www.linear.com
LTC CONFIDENTIAL-
FOR CUSTOMER USE ONLY

TITLE: TOP ASSEMBLY DRAWING
7-CHANNEL CONFIGURABLE HIGH POWER PMIC

SIZE	IC NO.	REV.
N/A	LTC3675EUFF DEMO CIRCUIT 1607A	1

FILENAME: DC1607A-1.PCB | SHT 1 of 2