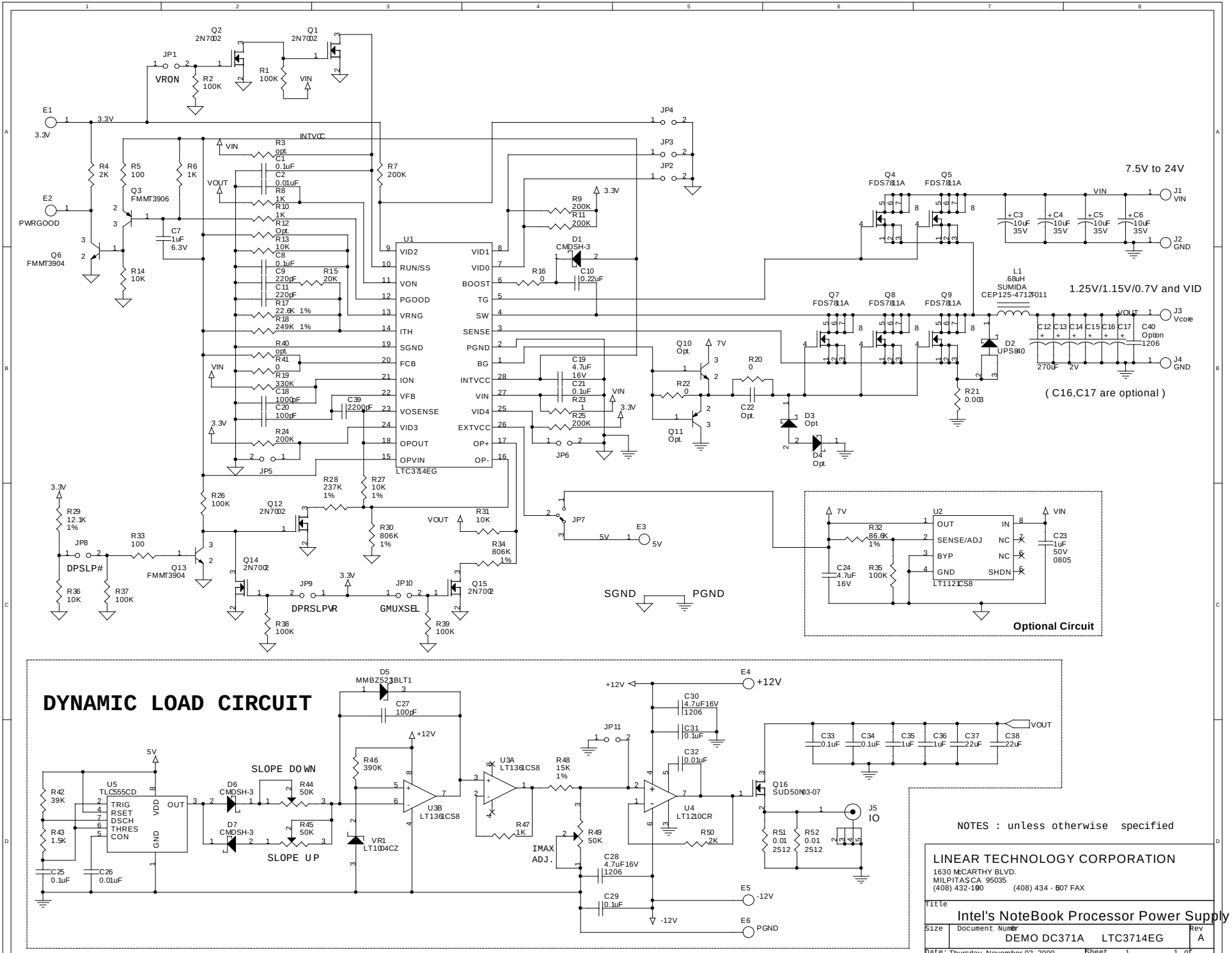
DYNAMIC LOAD CIRCUIT
7.5V to 24V
1.25V/1.15V/0.7V and VID
(C16,C17 are optional)
Optional Circuit
SGND
PGND
VRON
PWRGOOD
DPSLP#
DPRSLPVR
GMUXSEL
SLOPE DOWN
SLOPE UP
IMAX ADJ.
IO
NOTES : unless otherwise specified
LINEAR TECHNOLOGY CORPORATION
1630 McCARTHY BLVD.
MILPITAS, CA 95035
(408) 432-1900 (408) 434-0507 FAX
Intel's NoteBook Processor Power Supply
DEMO DC371A LTC3714EG
Thursday, November 02, 2000