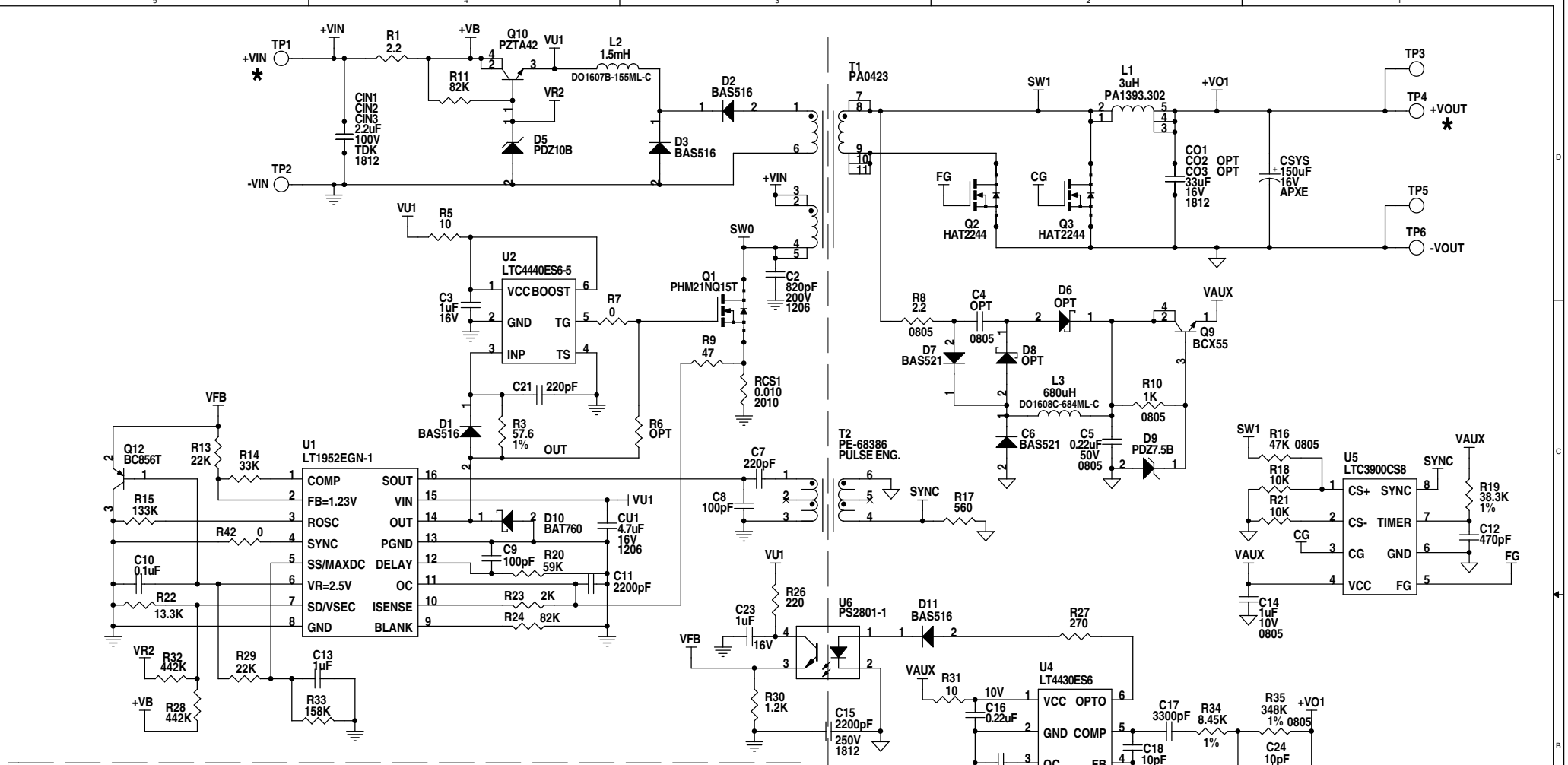

NOTES: UNLESS OTHERWISE SPECIFIED

1. ALL RESISTORS ARE IN OHMS, 0603.
   ALL CAPACITORS ARE IN MICROFARADS, 0603.

* FOR ASSEMBLY

VERSIONS	VIN	VOUT
-A	34V-75V	3.3V@30A
-B	18V-36V	5V@20A
-C	36V-72V	12V@12A
-D	36V-72V	28V@4A

CUSTOMER NOTICE

LINEAR TECHNOLOGY HAS MADE A BEST EFFORT TO DESIGN A CIRCUIT THAT MEETS CUSTOMER-SUPPLIED SPECIFICATIONS; HOWEVER, IT REMAINS THE CUSTOMER'S RESPONSIBILITY TO VERIFY PROPER AND RELIABLE OPERATION IN THE ACTUAL APPLICATION. COMPONENT SUBSTITUTION AND PRINTED CIRUIT BOARD LAYOUT MAY SIGNIFICANTLY AFFECT CIRCUIT PERFORMANCE OR RELIABILITY. CONTACT LINEAR TECHNOLOGY APPLICATIONS ENGINEERING FOR ASSISTANCE.

THIS CIRCUIT IS PROPRIETARY TO LINEAR TECHNOLOGY AND SUPPLIED FOR USE WITH LINEAR TECHNOLOGY PARTS.

CONTRACT NO.

APPROVALS

DRAWN: KIM T.

CHECKED:

APPROVED:

ENGINEER: GORAN P.

DESIGNER:

LINEAR TECHNOLOGY
1630 McCarthy Blvd.
Milpitas, CA 95035
Phone: (408)432-1900
Fax: (408)434-0507
LTC Confidential-For Customer Use Only

TITLE:

ISOLATED DC/DC POWER CONVERTER

SIZE A | DWG NO. DC968A2-C | REV A2-C

LT1952EGN-1, LTC3900CS8, LT4430ES6

DATE: Wednesday, January 21, 2009 | SHEET 1 OF 1