This circuit is proprietary to Linear Technology and supplied for use with Linear Technology parts.
Customer Notice: Linear Technology has made a best effort to design a circuit that meets customer-supplied specifications; however, it remains the customer's responsibility to verify proper and reliable operation in the actual application. Component substitution and printed circuit board layout may significantly affect circuit performance or reliability. Contact Linear Applications Engineering for assistance.

REVISION HISTORY

ECO	REV	DESCRIPTION	DATE	APPROVED
	0	1st Prototype	xx/xx/07	

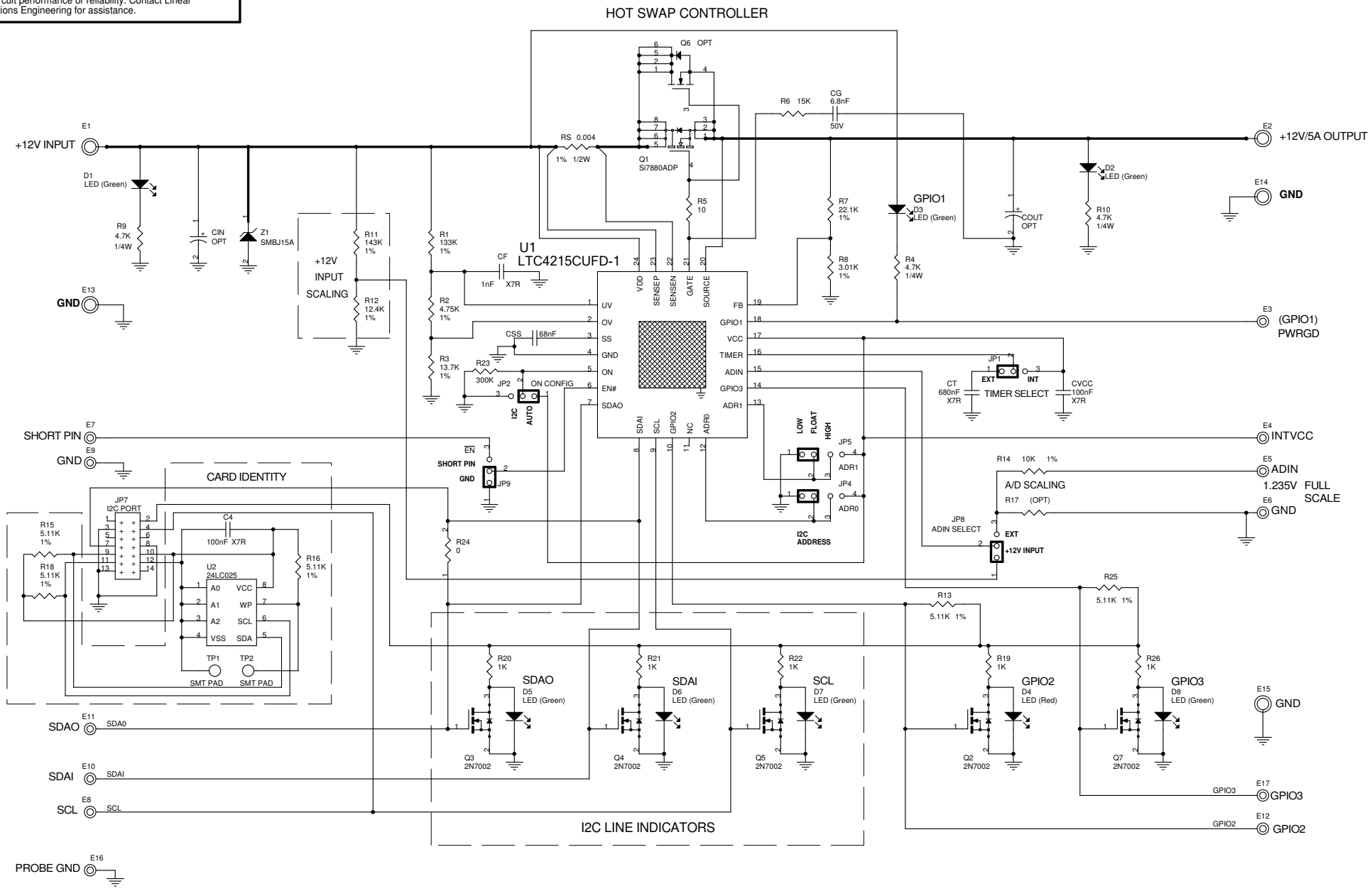

APPROVALS	LINEAR TECHNOLOGY CORPORATION
DRAWN: Rudy Bautista	1630 McCARTHY BLVD MILPITAS, CA. 95035 (408)432-1900 (408)434-0507 (FAX)
ENGINEER: VLAD OSTREROV	www.linear.com LTC Confidential - For Customer Use Only
APPROVED:	Title: SCH, LTC4215CUFD-1, HOT SWAP CONTROLLER WITH CURRENT AND VOLTAGE MONITOR
CHECKED:	Size / Document Number: DEMO CIRCUIT 1243A — Rev 1
Date: Tuesday, April 29, 2008	C:\ORCADWIN\CAPTURE\1243A\1243A_REV1.DSN — Sheet 1 of 1