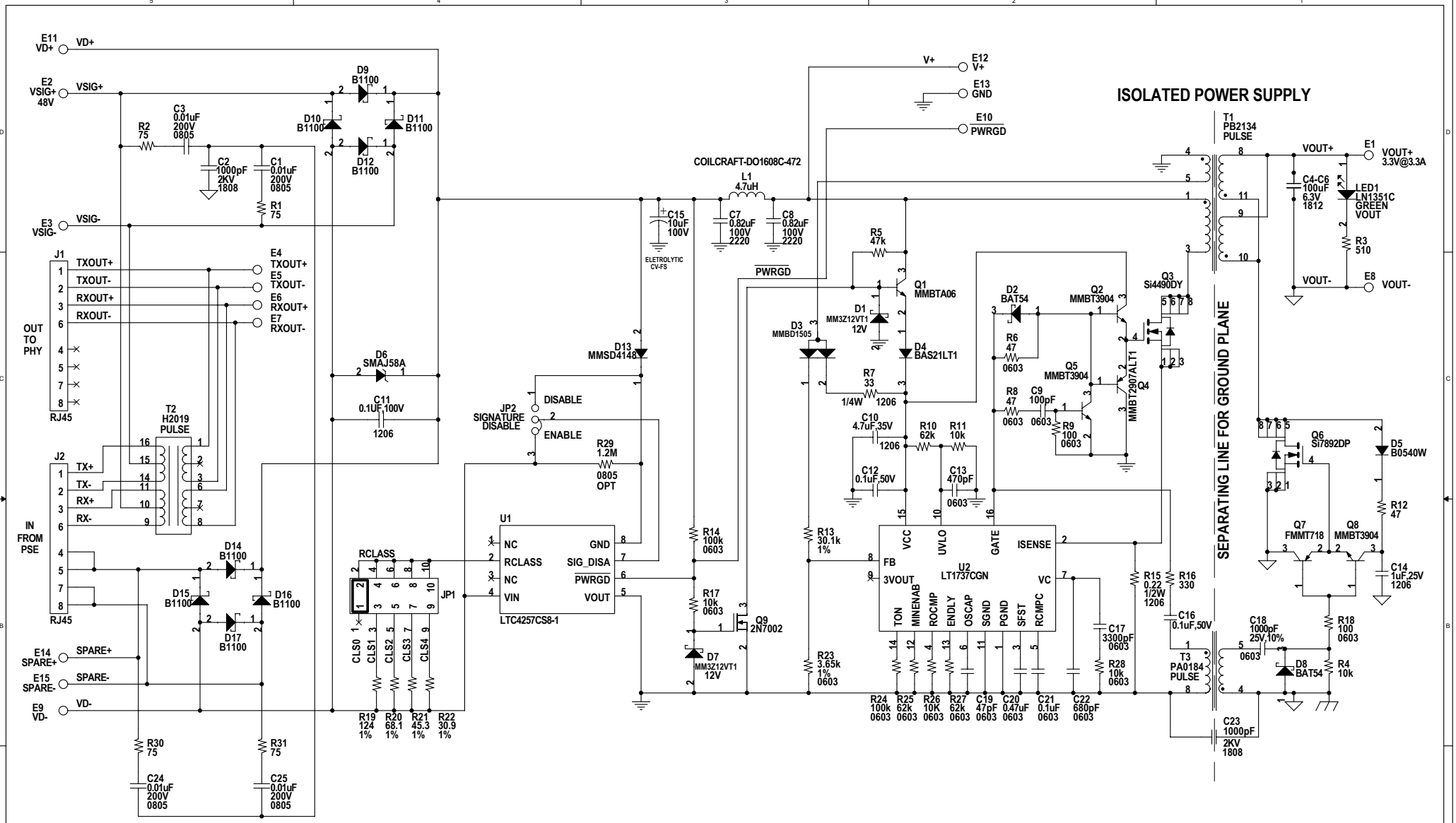

NOTES: UNLESS OTHERWISE SPECIFIED

1. ALL RESISTORS ARE IN OHMS, 1/10W, 5%, 0805.
2. ALL CAPACITORS ARE IN MICROFARAD, 25V, 0805.
3. INSTALL SHUNTS ON JP1 PIN 1 & 2, JP2 PIN 2 AND 3.

CUSTOMER NOTICE

LINEAR TECHNOLOGY HAS MADE A BEST EFFORT TO DESIGN A CIRCUIT THAT MEETS CUSTOMER-SUPPLIED SPECIFICATIONS; HOWEVER, IT REMAINS THE CUSTOMER'S RESPONSIBILITY TO VERIFY PROPER AND RELIABLE OPERATION IN THE ACTUAL APPLICATION. COMPONENT SUBSTITUTION AND PRINTED CIRUIT BOARD LAYOUT MAY SIGNIFICANTLY AFFECT CIRCUIT PERFORMANCE OR RELIABILITY. CONTACT LINEAR TECHNOLOGY APPLICATIONS ENGINEERING FOR ASSISTANCE.

THIS CIRCUIT IS PROPRIETARY TO LINEAR TECHNOLOGY AND SUPPLIED FOR USE WITH LINEAR TECHNOLOGY PARTS.

CONTRACT NO.

APPROVALS

DRAWN: KIM T.

CHECKED:

APPROVED:

ENGINEER: DILIAN R.

DESIGNER:

LINEAR TECHNOLOGY
1630 McCarthy Blvd.
Milpitas, CA 95035
Phone: (408)432-1900
Fax: (408)434-0507
LTC Confidential-For Customer Use Only

TITLE: SCHEMATIC

POWER-OVER-ETHERNET INTERFACE CONTROLLER

SIZE	DWG NO.	REV
A	DC671A-2 * LTC4257CS8-1	A

DATE: Friday, April 09, 2004

SHEET 1 OF 1