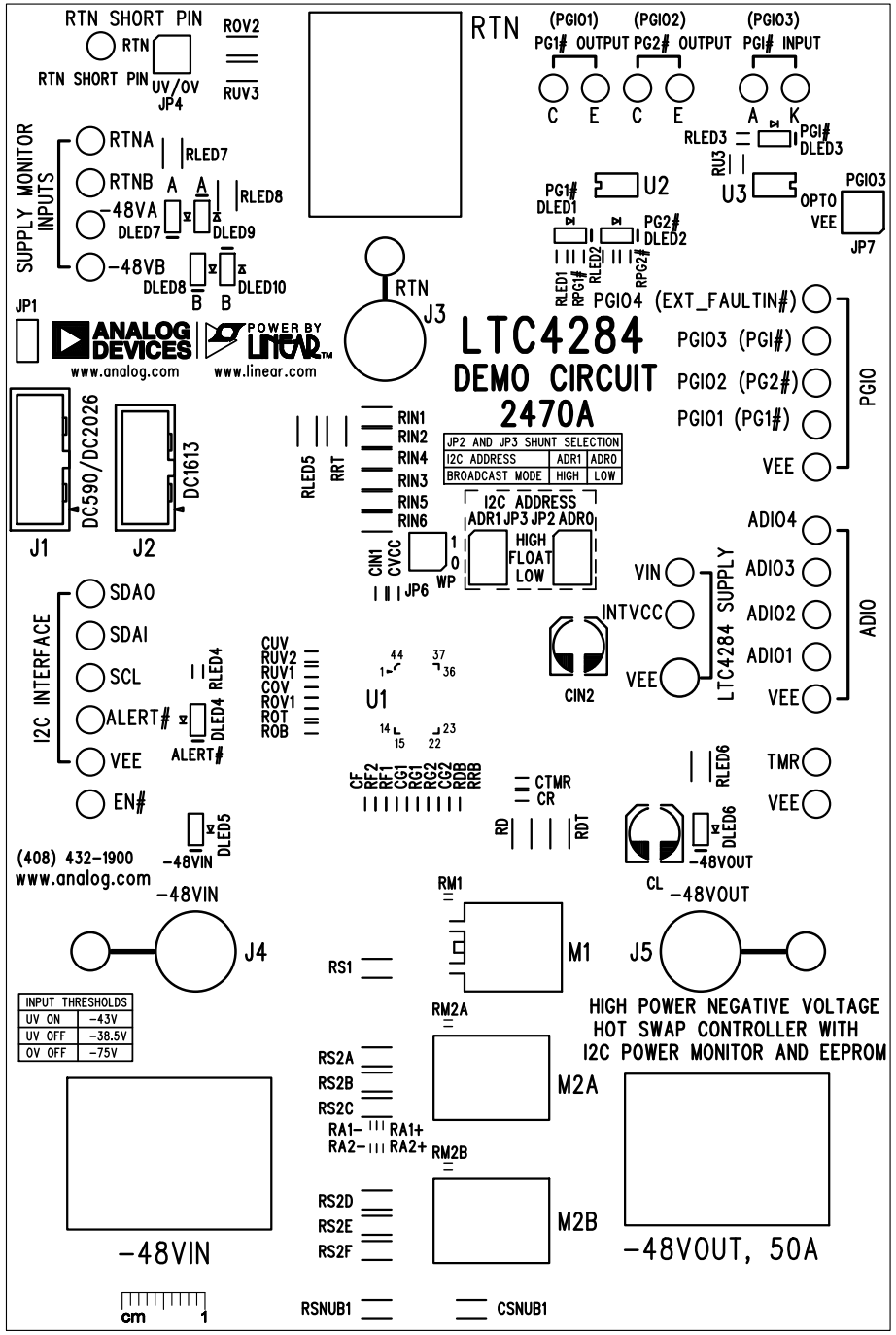


TOP SILKSCREEN DATE: 05-22-18

ANALOG DEVICES

DC2470-3 LTC4284IUHG

HIGH POWER NEGATIVE VOLTAGE HOT SWAP CONTROLLER WITH I2C POWER MONITOR AND EEPROM