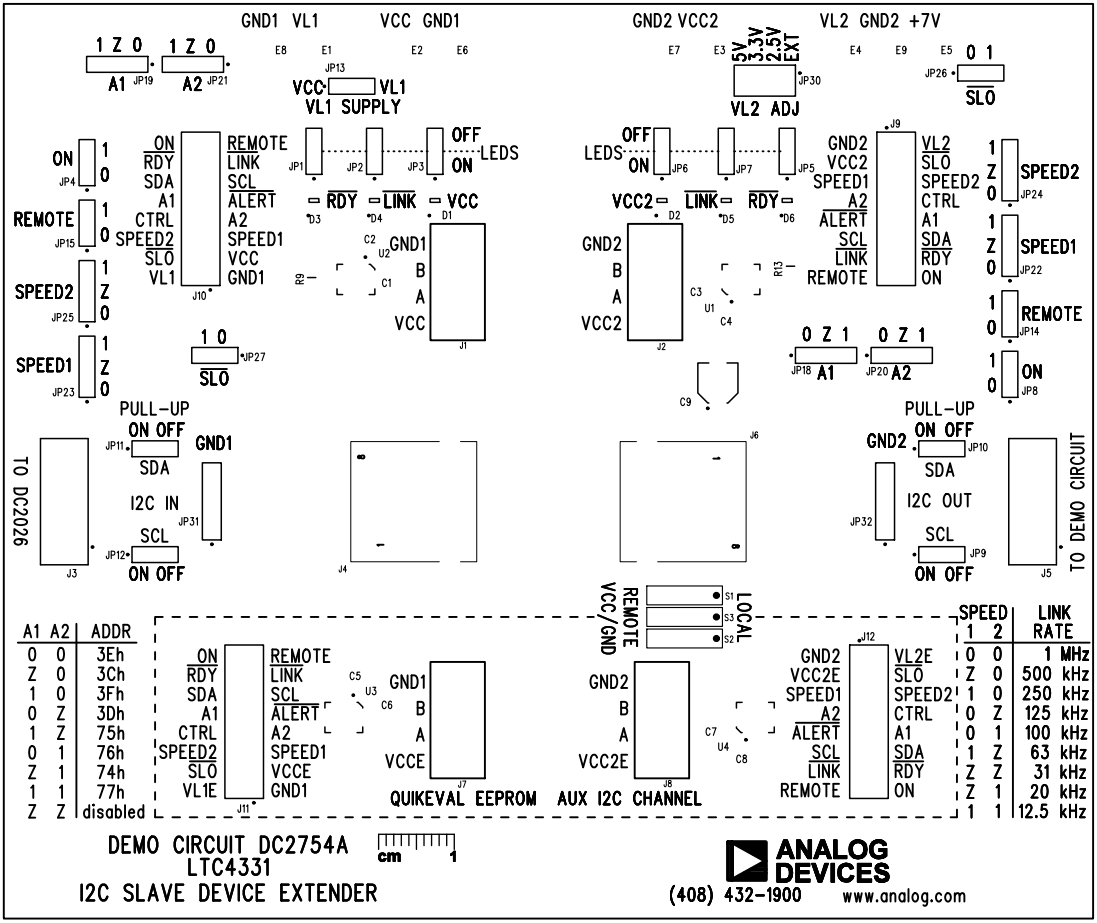

TOP SILKSCREEN
ANALOG DEVICES
DC2754A * LTC4331
I2C SLAVE DEVICE EXTENDER DEMO CIRCUIT
DATE: 4 OCT 18