DEMO CIRCUIT 1422
QUICK START GUIDE

LTC6605-7, LTC6605-10 and LTC6605-14
7MHz, 10MHz and14MHz, Dual, Matched, Filter/Amplifier

DESCRIPTION

Demonstration circuit 1422 features the LT6605-XX series of a dual, matched, fully differential 2nd order lowpass filter and amplifier. A DC1422 is available in three assemblies (refer to Table 1). The typical -3dB frequency (f3dB) of an LT6605-7, an LTC6605-10 and an LTC6605-14 is 7MHz, 10MHz and 14MHz respectively. However each LTC6605-XX the f3dB frequency can be set with one external resistor per channel in a small range listed on Table 2 (refer to Figure 3 and Table 2 of an LTC6605-XX data sheet).

The LTC6605-XX Internal laser-trimmed resistors and capacitors implement a very well matched (in gain and phase) 2nd order lowpass filter response. The LT6605-XX combines a two fully differential matched amplifiers and 2nd order lowpass filters for driving the differential inputs of a dual Analog to Digital Converter (ADC) and band-limiting the baseband signal of a digital communications receiver.

A DC1422 is configured as an AC coupled unity gain filter/amplifier using the lowest f3dB frequency in the range of Table 2 (6.5MHz, 9.7MHz and 12.4MHz for a -7, a -10 and a -14 respectively). Surface mount pads for 0603 passive components provide options to configure a DC1422 for gains greater than one and as 2nd order lowpass filter circuits as shown in an LTC6605-XX data sheet.

Connection to a differential input and output of a DC1422 is through SMA connectors. An on-board jumper with shunts configures the LTC6605-XX for full power, low power or shut-down operation.

Design files for this circuit board are available.
Call the LTC factory.

, LTC and LT are registered trademarks of Linear Technology Corporation.

Table 1. The DC1422 Assemblies

ASSEMBLY	Filter IC
DC1422A-A	LTC6605-7
DC1422A-B	LTC6605-10
DC1422A-C	LTC6605-14

Table 2. Resistor Set f3dB Range

Filter IC	f3dB Range
LTC6605-7	6.5MHz – 10MHz
LTC6605-10	9.7MHz – 14MHz
LTC6605-14	12.4MHz – 20MHz

Figure 1. The DC1422 Top Silk Screen

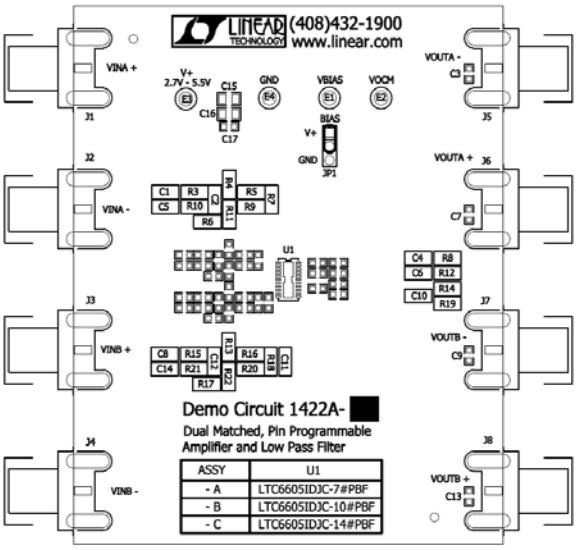

QUICK START SET UP

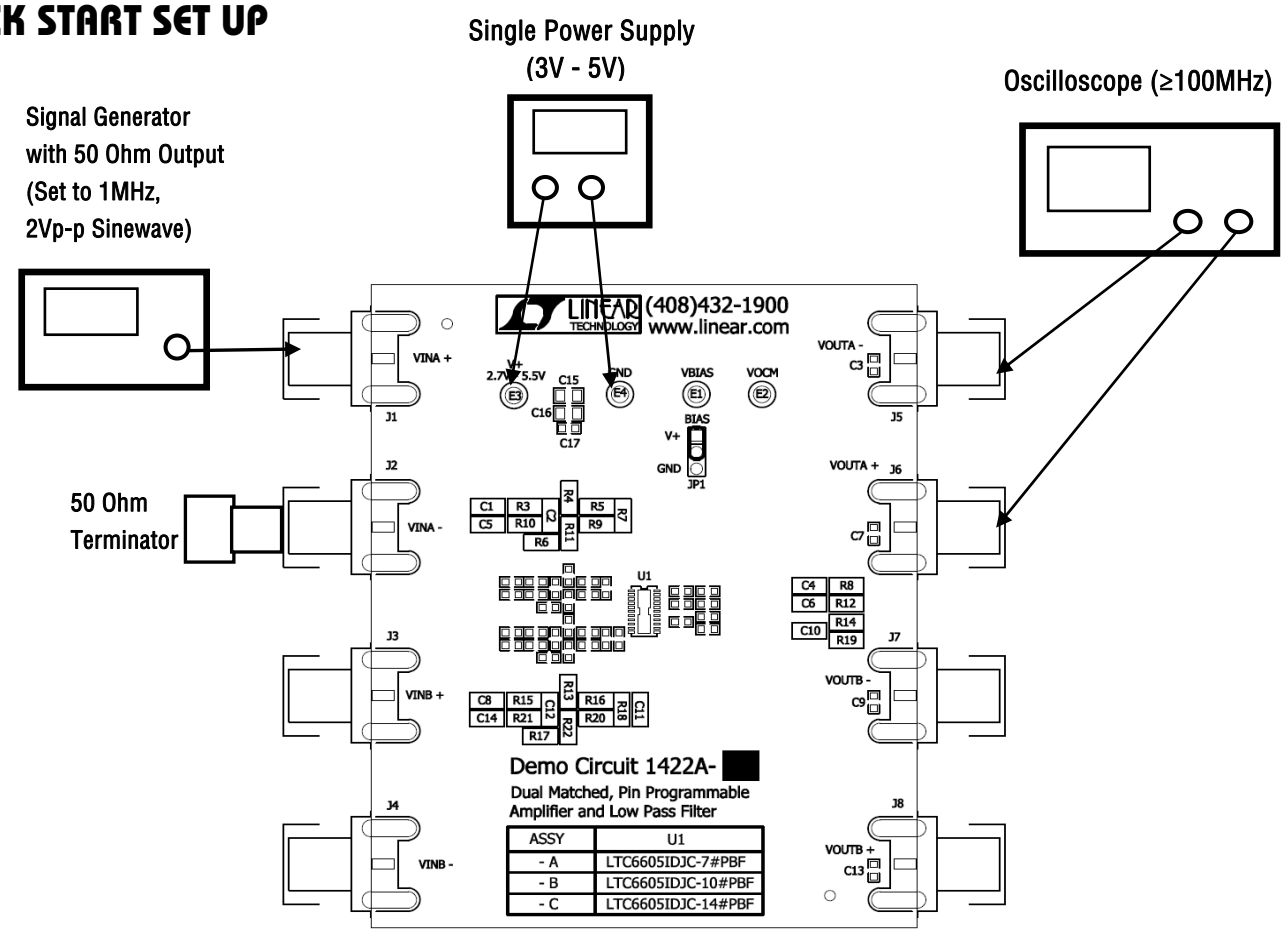

Figure 2. Single Supply Test Set Up Connections
(set the JP1 shunt to V+)

Quick Test Procedure

A DC1422 has two pairs of differential inputs, VINA+/VINA- and VINB+/VINB- and two pairs of differential outputs VOUTA+ /VOUTA- and VOUTB+/VOUTB-.

1. Testing the VINA to VOUTA Signal Path.

Connect a DC1422 board as shown in Figure 2 (connect signal generator to VINA+ and terminate VINA- with a 50 ohm terminator). Set the generator for a 1MHz, 2Vp-p, and sinewave. The oscilloscope channels connected to VOUTA- and VOUTA+ show a 1MHz, 1Vp-p, sinewave (see Note 1).

2. Testing the VINB to VOUTB Signal Path.

Connect signal generator to VINB+ and terminate VINB- with a 50 ohm terminator. Set the generator for a 1MHz, 2Vp-p, and sinewave. Connect oscilloscope channel 1 to VOUTB- and channel 2 to VOUTB+. The oscilloscope channels connected to VOUTB- and VOUTB+ show a 1MHz, 1Vp-p, sinewave.

Note: For unity gain testing the DC1422 inputs must be ideally driven by a zero ohm source (the outputs of a high speed differential amplifier). However, if the 50 ohm impedance of the generator's output and terminator is in series with the input resistors then the gain is less than one and the filter's Q value is affected (refer to the filter equations of Figure 3 in the LTC6605-7 data sheet).

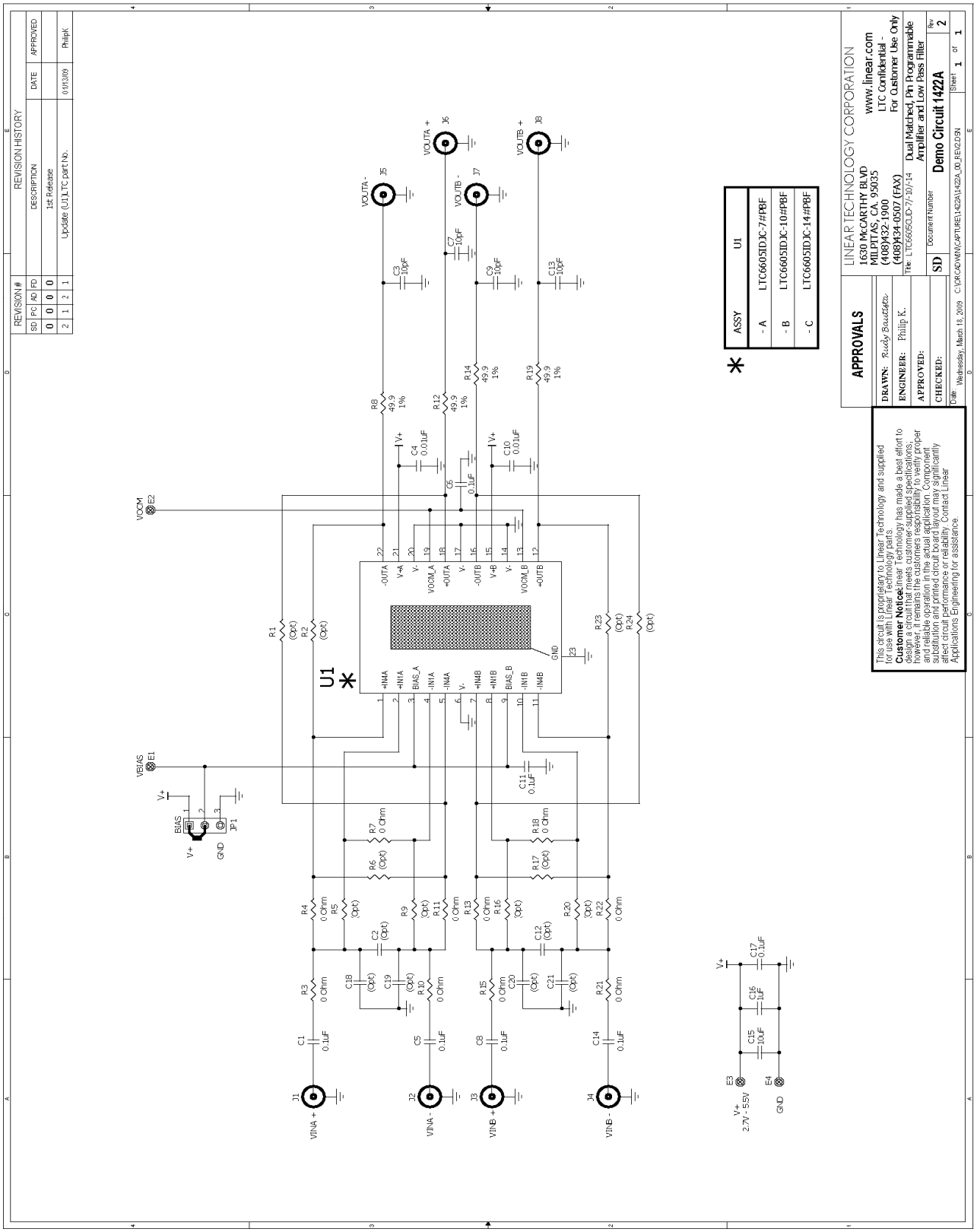
REVISION HISTORY
REVISION #
DESCRIPTION
DATE
APPROVED
1st Release
Update (U1) LTC part No.
01/13/09
PhilipK
U1
VIN-A +
VIN-A -
VIN-B +
VIN-B -
VOUTA -
VOUTA +
VOUTB -
VOUTB +
VCOM
VBIAS
V+
GND
V+ 2.7V - 5.5V
ASSY
U1
- A
LTC6605IDJC-7#PBF
- B
LTC6605IDJC-10#PBF
- C
LTC6605IDJC-14#PBF
APPROVALS
DRAWN: Rudy Bautista
ENGINEER: Philip K.
APPROVED:
CHECKED:
LINEAR TECHNOLOGY CORPORATION
1630 McCARTHY BLVD
MILPITAS, CA. 95035
(408)432-1900
(408)434-0507 (FAX)
www.linear.com
LTC Confidential - For Customer Use Only
Dual Matched, Pin Programmable Amplifier and Low Pass Filter
Demo Circuit 1422A
Document Number
SD
Rev 2
Sheet 1 of 1
This circuit is proprietary to Linear Technology and supplied for use with Linear Technology parts.
Customer Notice: Linear Technology has made a best effort to design a circuit that meets customer-supplied specifications; however, it remains the customers responsibility to verify proper and reliable operation in the actual application. Component substitution and printed circuit board layout may significantly affect circuit performance or reliability. Contact Linear Applications Engineering for assistance.

DC1422 Parts List

Qty	Reference	Part Description	Manufacturer / Part #
7	C1,C5,C6,C8,C11,C14,C17	Cap., X7R 0.1uF 25V 10% 0603	AVX 06033C104KAT2A
0	C2,C12,C18,C19,C20,C21 (Opt)	Cap., 0603	
4	C3,C7,C9,C13	Cap., NPO 10pF 25V 10% 0603	AVX 06033A100KAT2A
2	C10,C4	Cap., X7R 0.01uF 25V 10% 0603	AVX 06033C103KAT2A
1	C15	Cap., X5R 10uF 10V 20% 0805	TDK C2012X5R1A106M
1	C16	Cap., X7R 1uF 16V 10% 0805	TDK C2012X7R1C105K
4	E1,E2,E3,E4	Turret, Testpoint 0.063"	Mill Max 2308-2-00-80-00-00-07-0
1	JP1	Headers, 3 Pins 2mm Ctrs.	CommConn Con Inc. 2802S-03G2
8	J1,J2,J3,J4,J5,J6,J7,J8	Conn., SMA 50-Ohm	E.F. JOHNSON 142-0701-851
0	R1,R2,R5,R6,R9,R16,R17, (Opt)	Res., 0603	
	R20,R23,R24		
10	R3,R4,R7,R10,R11,R13,R15,	Res/Jumper, Chip 0 Ohm 1/16W 1 AMP 0603	Vishay CRCW06030000ZOEA
	R18,R21,R22		
4	R8,R12,R14,R19	Res., Chip 49.9 0.06W 1% 0603	Vishay CRCW060349R9FKEA
1	XJP1	Shunt, 2mm Ctrs.	Samtec 2SN-BK-G
1		FAB, 1422A_Rev1	Demo Circuit 1422A
	VERSION A-A:		
1	U1	I.C.	Linear Tech. LTC6605IDJC-7#PBF
	VERSION A-B:		
1	U1	I.C.	Linear Tech. LTC6605IDJC-10#PBF
	VERSION A-C:		
1	U1	I.C.	Linear Tech. LTC6605IDJC-14#PBF