REVISION HISTORY				
ECO	REV	DESCRIPTION	APPROVED	DATE
—	1	PRODUCTION	HTOO K.	10-10-17

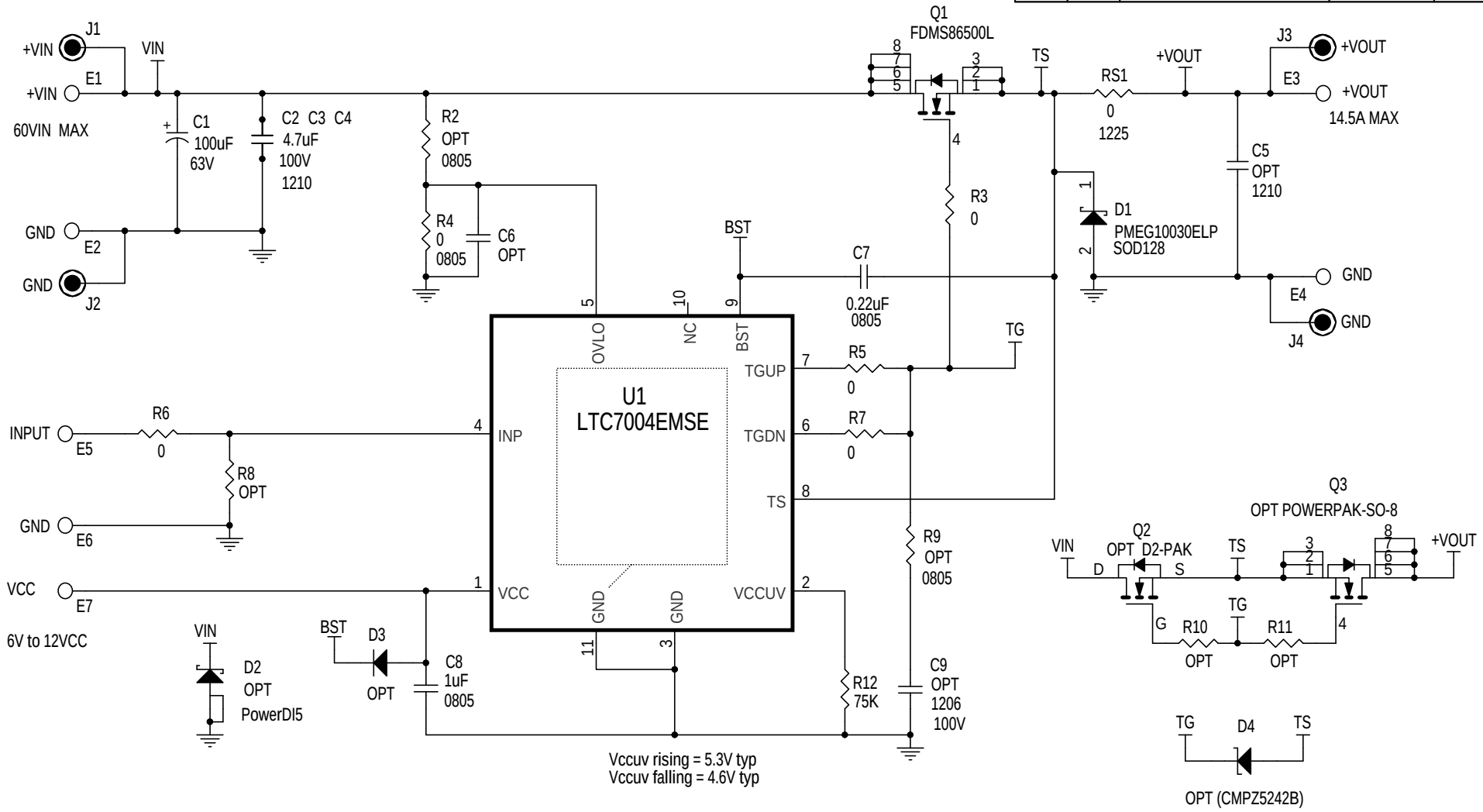

Note: OPT = (OPT) = Optional = Not Used

Note: Unless otherwise specified:
All resistors are in ohms, 1%, 0603.
All capacitors are in microfarads 0603.
All capacitors are 25V.
1/16W = 0402, 1/10W = 0603, 1/8W = 0805,
1/4W = 1206, 1/2W =1210, 1W = 2512.

4.7uF 100V Murata GRM32DC72A475ME01 (1210, X7S, -75% at 60V).
100uF 63V Wurth Electronic 860040775006 (10x12.5mm)
640mA @100KHz@105°C, 0.34Ohm@100KHz).
0 Ohm 1225 TEPRO RN5326
Fairchild FDMS86500L (60, 3.7mOh max and 117nCtyp at 10V).

CUSTOMER NOTICE

LINEAR TECHNOLOGY HAS MADE A BEST EFFORT TO DESIGN A CIRCUIT THAT MEETS CUSTOMER-SUPPLIED SPECIFICATIONS; HOWEVER, IT REMAINS THE CUSTOMER'S RESPONSIBILITY TO VERIFY PROPER AND RELIABLE OPERATION IN THE ACTUAL APPLICATION. COMPONENT SUBSTITUTION AND PRINTED CIRCUIT BOARD LAYOUT MAY SIGNIFICANTLY AFFECT CIRCUIT PERFORMANCE OR RELIABILITY. CONTACT LINEAR TECHNOLOGY APPLICATIONS ENGINEERING FOR ASSISTANCE.

THIS CIRCUIT IS PROPRIETARY TO LINEAR TECHNOLOGY AND SUPPLIED FOR USE WITH LINEAR TECHNOLOGY PARTS.

APPROVALS	
PCB DES.	LT
APP ENG.	HTOO K.

SCALE = NONE

LINEAR TECHNOLOGY
1630 McCarthy Blvd.
Milpitas, CA 95035
Phone: (408)432-1900 www.linear.com
Fax: (408)434-0507
LTC Confidential-For Customer Use Only

TITLE: SCHEMATIC

FAST 60V HIGH-SIDE NMOS STATIC SWITCH DRIVER

SIZE	IC NO.	REV.
N/A	LTC7004EMSE DC2750A	1

DATE: Tuesday, October 10, 2017 SHEET 1 OF 1