NOTE

All references to the 6061A also pertain to the 6060B.

6060B/6061A

SYNTHESIZED RF SIGNAL GENERATOR

Instruction Manual

P/N 893052
MAY 1992
©1992, John Fluke Mfg. Co.,Inc. All Rights Reserved. Litho in U.S.A.

Giga-tronics

Table of Contents

SECTION	TITLE	PAGE
1	**INTRODUCTION AND SPECIFICATIONS**	**1-1**
	1-1. INTRODUCTION	1-1
	1-2. UNPACKING THE GENERATOR	1-1
	1-3. SAFETY	1-1
	1-4. OPERATOR INFORMATION CARD	1-2
	1-5. GENERATOR DESCRIPTION	1-2
	1-6. Controller Functions	1-2
	1-10. Frequency	1-3
	1-11. Reference	1-3
	1-12. Amplitude	1-3
	1-13. Modulation	1-3
	1-14. OPTIONS AND ACCESSORIES	1-4
	1-15. RECOMMENDED TEST EQUIPMENT	1-4
	1-16. MNEMONICS	1-5
	1-17. SIGNAL GENERATOR SPECIFICATIONS	1-5
2	**INSTALLATION AND OPERATION**	**2-1**
	2-1. INTRODUCTION	2-1
	2-2. INITIAL INSPECTION	2-1
	2-3. SETTING UP THE GENERATOR	2-1
	2-4. Line Power Requirements	2-1
	2-5. Line Voltage and Fuse Selection	2-1
	2-6. IEEE-488 Address	2-2
	2-7. RACK OR BENCH MOUNTING THE GENERATOR	2-2
	2-8. GENERAL OPERATING INFORMATION	2-3
	2-9. Familiarization	2-3
	2-10. Local Versus Remote Operation	2-3
	2-11. Power-On Sequence	2-3
	2-12. Changing Output Parameters	2-3
	2-13. Function Entry	2-9
	2-14. Bright-Digit Edit Operation	2-11
	2-15. Step Operation	2-11
	2-16. Status and Clear Entries	2-12
	2-17. RF Output On/Off	2-12
	2-18. Modulation On/Off and Rate	2-12
	2-19. Memory	2-12
	2-20. Special Function	2-13

(Continued on page ii)

SECTION		TITLE	PAGE
	2-21.	OPERATING REFERENCE MATERIAL	2-13
	2-22.	Amplitude and Frequency Entry	2-13
	2-23.	Amplitude Fixed Range	2-15
	2-24.	Amplitude Units Conversion	2-16
	2-25.	Bright-Digit Edit Entry	2-17
	2-26.	Memory Entry	2-19
	2-27.	Modulation Entry	2-20
	2-28.	Relative Function	2-22
	2-29.	RF Output On/Off Entry	2-23
	2-30.	Special Function Entry	2-24
	2-31.	Status and Clear Entry	2-24
	2-32.	Step Entry	2-26
	2-33.	REMOTE OPERATION (IEEE-488 INTERFACE)	2-27
	2-34.	Setting Up The IEEE-488 Interface	2-28
	2-35.	Programming Commands	2-29
	2-36.	Programming Examples	2-29
	2-40.	Interface Functions	2-38
	2-41.	Address Mode	2-38
	2-46.	Talk-Only Mode	2-41
	2-47.	Listen-Only Mode	2-42
	2-48.	Command Syntax	2-42
	2-52.	Command Descriptions	2-44
	2-60.	Command Processing	2-60
	2-63.	Timing Data	2-61
	2-69.	Power-on Conditions	2-63
3		**THEORY OF OPERATION**	**3-1**
	3-1.	INTRODUCTION	3-1
	3-2.	GENERAL DESCRIPTION	3-1
	3-3.	Front Section	3-1
	3-4.	Module Section	3-1
	3-5.	Rear Section	3-1
	3-6.	FUNCTIONAL DESCRIPTION	3-2
	3-7.	Level	3-2
	3-8.	Amplitude Modulation	3-3
	3-9.	Frequency	3-3
	3-10.	Frequency Modulation	3-4
	3-11.	SOFTWARE OPERATION	3-4
	3-12.	User Interface	3-4
	3-13.	Amplitude Control	3-5
	3-14.	Attenuators	3-5
	3-15.	Level DAC	3-5
	3-16.	Temperature Compensation	3-5
	3-17.	Reverse Power Protector	3-5
	3-18.	Frequency Reference Control	3-6
	3-19.	Frequency Control	3-6
	3-20.	Modulation On/Off	3-6
	3-21.	Modulation Frequency	3-6
	3-22.	Amplitude Modulation	3-6
	3-23.	Frequency Modulation	3-6
	3-24.	FM Deviation	3-7
	3-25.	Self Test	3-7
	3-26.	Service Special Functions	3-8

(Continued on page iii)

SECTION	TITLE	PAGE

3-27. Service IEEE-488 Commands 3-8
3-28. Status Signals 3-10
3-29. DETAILED CIRCUIT DESCRIPTIONS 3-10
3-30. A1A1 Display PCA 3-11
3-37. A1A2 Switch PCA 3-11
3-38. A2A1 Synthesizer PCA 3-12
3-50. A2A2 VCO PCA 3-20
3-51. A2A4 Output PCA 3-21
3-57. A2A5 Attenuator/RPP Assembly 3-25
3-58. A2A7 Controller PCA 3-26
3-67. A2A8 Non-Volatile Memory PCA 3-27
3-70. A3A1 Power Supply PCA 3-28
3-71. A3A3 IEEE-488 Interface Assembly 3-28
3-73. A5A1 Medium-Stability Reference PCA 3-29

4 MAINTENANCE 4-1

4-1. INTRODUCTION 4-1
4-2. SERVICE METHODS 4-1
4-3. Fluke Service 4-1
4-4. Module Replacement 4-1
4-5. Parts Replacement 4-1

4A PERFORMANCE TESTS 4A-1

4A-1. INTRODUCTION 4A-1
4A-2. TEST EQUIPMENT 4A-1
4A-3. POWER-ON TEST 4A-3
4A-4. FREQUENCY ACCURACY TEST 4A-3
4A-4A. SYNTHESIS TEST 4A-4
4A-5. HIGH-LEVEL ACCURACY TEST 4A-5
4A-6. MID-LEVEL ACCURACY TEST 4A-6
4A-7. LOW-LEVEL ACCURACY TEST 4A-8
4A-8. ALTERNATE-LEVEL ACCURACY TEST 4A-9
4A-9. OUTPUT LEAKAGE TEST 4A-11
4A-10. ALTERNATE OUTPUT LEAKAGE TEST 4A-11
4A-11. HARMONIC AND SPURIOUS TEST 4A-12
4A-12. MODULATION TESTS 4A-14
4A-13. VSWR TESTS 4A-19

4B ACCESS PROCEDURES 4B-1

4B-1. INTRODUCTION 4B-1
4B-2. LOCATION OF MAJOR ASSEMBLIES 4B-1
4B-3. ACCESS INSTRUCTIONS 4B-1
4B-4. Removing the Front Section 4B-1
4B-5. Removing the Rear Section 4B-2
4B-6. Removing the A2A1 Synthesizer PCA 4B-2
4B-7. Removing the A2A4 Output PCA 4B-2
4B-8. Removing the A2A5 Attenuator/RPP Assembly 4B-2
4B-9. Removing the A2A1 VCO PCA 4B-2

(Continued on page iv)

SECTION	TITLE	PAGE
4C	**CALIBRATION ADJUSTMENTS**	**4C-1**
4C-1.	INTRODUCTION	4C-1
4C-2.	SAFETY	4C-1
4C-3.	POWER SUPPLY ADJUSTMENT	4C-1
4C-4.	EXTERNAL MODULATION LEVEL INDICATOR ADJUSTMENT	4C-2
4C-5.	OUTPUT ASSEMBLY ADJUSTMENT	4C-4
4C-6.	Level DAC Offset Adjustment	4C-4
4C-7.	Modulation Oscillator Level Adjustment	4C-6
4C-8.	Detector Offset Adjustment	4C-7
4C-9.	AM Depth Adjustment	4C-8
4C-10.	RF Level Adjustment	4C-9
4C-11.	Het Level Adjustment	4C-10
4C-12.	SYNTHESIZER ASSEMBLY ADJUSTMENT	4C-10
4C-13.	FM Adjustments	4C-11
4C-14.	20-kHz and 40-kHz Notch Filter Adjustments	4C-13
4C-15.	VCO Voltage-Clamp Ajustment, R104 and R125	4C-14
4C-16.	800-MHz Oscillator Adjustment	4C-14
4C-17.	10-MHz Lock-Range Centering Adjustment	4C-15
4C-18.	Reference Frequency Adjustment, R230	4C-16
4D	**TROUBLESHOOTING AND REPAIR**	**4D-1**
4D-1.	INTRODUCTION	4D-1
4D-2.	MODULE REPLACEMENT	4D-1
4D-3.	Power Supply PCA, A3A1	4D-2
4D-5.	Synthesizer PCA, A2A1	4D-2
4D-6.	VCO PCA, A2A2	4D-2
4D-7.	Output PCA, A2A4	4D-3
4D-8.	Controller PCA, A2A7	4D-3
4D-9.	Display PCA, A1A1	4D-3
4D-10.	Attenuator/RPP PCA A2A5	4D-3
4D-11.	IEEE-488 Interface PCA, A3A3A1	4D-3
4D-12.	Non-Volatile Memory PCA, A2A8	4D-3
4D-13.	PARTS REPLACEMENT	4D-3
4D-14.	TROUBLESHOOTING	4D-4
4D-15.	Service Special Functions	4D-4
4D-16.	UNCAL Conditions	4D-5
4D-17.	Self Test/Error Codes Description	4D-5
4D-22.	Check Output Signal	4D-8
4D-23.	Auxiliary Power Supply	4D-8
4D-24.	Check Power Supply Voltages	4D-9
4D-25.	DIGITAL AND CONTROL TROUBLESHOOTING	4D-10
4D-26.	Control Activity	4D-10
4D-27.	Latch Control	4D-10
4D-28.	Microprocessor Kernel	4D-10
4D-29.	Power Reset	4D-11
4D-30.	Microprocessor Inputs	4D-11
4D-31.	IEEE-488 Interrupt	4D-11
4D-32.	Microprocessor Bus	4D-11
4D-33.	Address Decoder	4D-11
4D-34.	Display and Controls	4D-11

(Continued on page v)

SECTION	TITLE	PAGE
	4D-35. SYNTHESIZER TROUBLESHOOTING	4D-13
	4D-36. Reference Circuitry Check	4D-13
	4D-37. Main Phase Lock Loop	4D-13
	4D-38. Sub-Synthesizer and HET (800 MHz), 40-MHz Loop	4D-16
	4D-39. FM Circuitry	4D-16
	4D-40. LEVEL TROUBLESHOOTING	4D-17
	4D-41. Output Assembly Test Point Signal Information	4D-17
	4D-42. ATTENUATOR LEVEL CONTROL	4D-17
	4D-43. Attenuator Check	4D-17
	4D-44. Unleveled Condition	4D-19
	4D-45. AM TROUBLESHOOTING	4D-20
	4D-46. Internal/External AM	4D-20
	4D-47. ALC Loop Control Voltage	4D-21
	4D-48. Detector Linearity	4D-21
	4D-49. RPP Control	4D-21
5	**LIST OF REPLACEABLE PARTS**	**5-1**
	TABLE OF CONTENTS	5-1
	5-1. INTRODUCTION	5-3
	5-2. HOW TO OBTAIN PARTS	5-3
	5-3. MANUAL STATUS INFORMATION	5-3
	5-4. SERVICE CENTERS	5-3
6	**OPTIONS**	**6-1**
	TABLE OF CONTENTS	6-1
7	**SCHEMATIC DIAGRAMS**	**7-1**
	TABLE OF CONTENTS	7-1

List of Tables

TABLE	TITLE	PAGE
1-1.	Signal Generator Specification for 6060B	1-6
1-2.	Signal Generator Specification for 6061A	1-11
2-1.	Front Panel Controls, Indicators, and Connectors	2-5
2-2.	Rear Panel Controls, Connectors, and Switches	2-10
2-3.	Instrument Preset State	2-11
2-4.	Special Functions	2-14
2-5.	UNCAL Error Codes	2-25
2-6.	REJect ENTRY Codes	2-25
2-7.	Index of IEEE-488 Commands	2-29
2-8.	IEEE-488 Commands	2-30
2-9.	IEEE-488 Interface Functions List	2-38
2-10.	IEEE-488 Address Mode Message Descriptions	2-39
2-11.	Suffix Types	2-45
2-12.	Learn Character to Hexadecimal Conversion	2-53
2-13.	Interface Mode Commands	2-54
2-14.	Self-Test Error Codes	2-56
2-15.	Input/Output Monitor Commands	2-58
2-16.	Read/Write Monitor Commands	2-59
2-17.	Hardware Control Monitor Commands	2-59
2-18.	SRQ Mask and Status Values	2-60
2-19.	Command-Parsing Time	2-62
2-20.	Typical Programming Time of the Generator Functions	2-62
2-21.	IEEE-488 Power-On State	2-63
3-1.	Power Supply Rectifier Configurations	3-28
4A-1.	Recommended Test Equipment	4A-2
4A-2.	Modulation Tests Requirements	4A-14
4A-3.	AM Test Conditions	4A-17
4A-4.	AM Depth Range	4A-17
4D-1.	Module Exchange Assemblies	4D-2
4D-2.	Self Test Display Field	4D-5
4D-3.	AAA Field AM and FM Tests	4D-6
4D-4.	BBB Field Test Results	4D-7
4D-5.	CCC Field Test Results	4D-7
4D-6.	DDD Field Test Results	4D-7
4D-7.	Band, Filter, and Frequency Programming Data	4D-8
4D-8.	Power Supply Characteristics	4D-9
4D-9.	Address Codes for the Front Panel Keys	4D-12
4D-10.	Synthesizer PCA Test Points	4D-14
4D-11.	Frequency Reference Control	4D-15

(Continued on page viii)

TABLE	TITLE	PAGE
4D-13.	FM DAC Control	4D-17
4D-14.	Output PCA Test Points	4D-18
4D-15.	Attenuator Level Control	4D-19
4D-16.	Attenuator Levels	4D-19
4D-17.	Modulation On/Off Control	4D-20
4D-18.	Modulation Frequency Control	4D-20

List of Illustrations

FIGURE	TITLE	PAGE
Frontispiece	6061A Synthesized RF Signal Generator	*x*
2-1.	Fuse/Filter/Line Voltage Selection Assembly	2-2
2-2.	6061A Outside Dimensions	2-4
2-3.	Front Panel Controls, Indicators, and Connectors	2-5
2-4.	Rear Panel Controls, Connectors, and Switches	2-10
2-5.	6061A Signal Generator Connected to a 1722A	2-28
2-6.	6061A IEEE-488 Bus Connected to a 6061A IEEE-488 Bus	2-42
2-7.	Learn String Example	2-47
3-1.	Triple-Modulus Prescaler Operation	3-14
3-2.	N-Divider Operation	3-15
3-3.	N-Divider Timing Diagram	3-16
4A-1.	Two-Turn Loop	4A-1
4A-2.	High-Level Accuracy Test Conditions	4A-6
4A-3.	High-Level Accuracy Test Conditions	4A-7
4A-4.	Alternate-Level Accuracy Equipment Setup	4A-10
4C-1.	Power Supply Test Points	4C-3
4C-2.	Module Plate, Bottom View	4C-5
4C-3.	Module Plate, Top View	4C-12

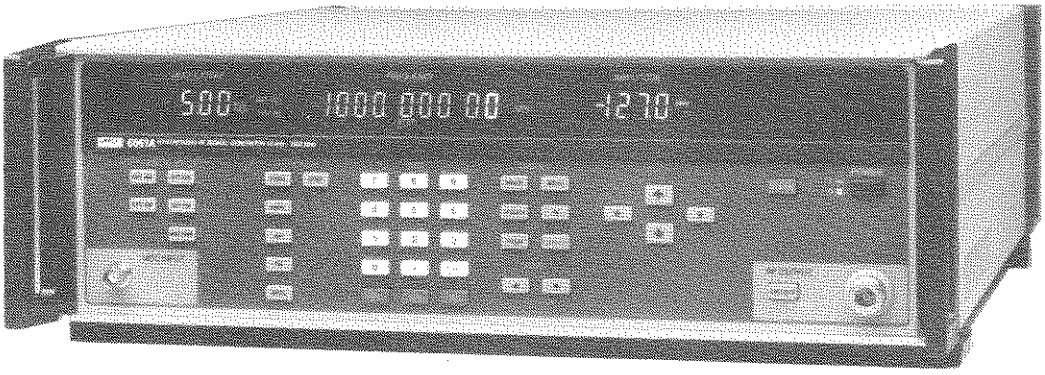

6061A Synthesized RF Signal Generator

Section 1
Introduction and Specifications

1-1. INTRODUCTION

The 6061A Synthesized RF Signal Generator (referred to as the Generator or instrument) is a fully-programmable, precision, synthesized signal generator. The Generator is designed for applications that require good modulation, frequency accuracy, and output level performance with moderate spectral purity. It is well suited for testing a wide variety of RF components and systems including filters, amplifiers, mixers, and radios, particularly on-channel radio testing.

1-2. UNPACKING THE GENERATOR

This shipping container should include a 6061A Signal Generator, an Operator Information Card, a Getting Started Manual, an Instruction Manual, and a line power cord. Any accessories ordered for the Generator are shipped in a separate container.

Section 2, Installation and Operation, gives instructions on inspecting your new Generator, and what to do if the instrument arrives with shipping damage. Reshipment information is also included.

1-3. SAFETY

This instruction manual contains information, warnings, and cautions that should be followed to ensure safe operation and to maintain the Generator in a safe condition.

The Generator is designed primarily for indoor use, and it may be operated in temperatures from 0°C to and 50°C without degradation of its safety.

WARNING

TO AVOID ELECTRIC SHOCK, USE A POWER CORD THAT HAS A THREE-PRONG PLUG. IF YOU DO NOT USE A PROPER POWER CORD, THE 6061A CASE CAN DEVELOP AN ELECTRICAL POTENTIAL ABOVE EARTH GROUND.

CAUTION

To avoid damage to the 6061A, check that the rear panel line voltage selection card and fuse are correct for the line voltage in your area. The correct line voltage and fuse combinations are:

LINE VOLTAGE	FUSE
100/120V ac, ±10%, 47 Hz to 63 Hz	1.5 AMP
220/240V ac, ±10%, 47 Hz to 63 Hz	.75 AMP

1-4. OPERATOR INFORMATION CARD

The Operator Information Card has an adhesive backing so it may be affixed to the top of the Generator in bench applications or to the operator console in remote applications. A copy of the card is located at the end of Section 8 of this manual as a convenient reference or for duplication.

1-5. GENERATOR DESCRIPTION

Fundamental features of the Generator are as follows:

0.01-MHz to 1050-MHz frequency range in 10-Hz steps

+13-dB to -127-dBm level range in 0.1-dB steps

AM and FM, internal or external

Internal 400-Hz and 1000-Hz modulation oscillator

Relative frequency and amplitude

Volts/dBm conversion

Store/recall memory

Master/slave for frequency, amplitude, and modulation step (IEEE-488 Interface controlled.)

Fluorescent display

5 1/4-inches high, rack mountable

1-6. Controller Functions

The Controller microprocessor controls all operator interface functions, performs background operations such as status checks, and updates (strobes) the front panel displays. Whether you are using local control with the front panel, or remote control with the IEEE-488 Interface, the microprocessor provides self test and diagnostic capability. Economical instrument performance is achieved by using software compensation EPROMs and accuracy-enhancement circuitry.

1-7. LOCAL CONTROL

The value of the basic output parameters of the Generator, i.e., amplitude, frequency, or modulation can be controlled in three ways:

Direct numeric entry

Incrementing or decrementing the bright digit

Step-up or step-down entry where the step size can be operator programmed

Other controls provide selection of the POWER ON/OFF, RF OUTPUT ON/OFF, MODULATION ON/OFF, internal/external frequency reference, and STATUS.

1-8. DISPLAY FIELD

The programmed values of modulation, frequency, and amplitude are displayed in the three display fields.

1-9. REMOTE-CONTROL PROGRAMMING

The IEEE-488 Interface allows the Generator to be remotely controlled with any IEEE-488 bus controller. The instrument can also be used on the IEEE-488 bus without a controller in a listen-only or talk-only mode by selecting the appropriate Generator rear panel IEEE-488 switch settings.

All instrument controls can be remotely controlled except the POWER ON/OFF and the rear panel REF INT/EXT switches. The IEEE-488 Interface provides additional commands not available with local control, such as data transfer and individual control of internal I/O control bits.

The IEEE-488 Interface allows two Generators to track amplitude, frequency, or modulation in a master/slave configuration when using the front panel step-up and step-down entries on one of the instruments. For instance, frequency tracking is convenient for tests involving mixers, and amplitude tracking is useful for two-tone intermodulation testing.

1-10. Frequency

The specified frequency range is 0.01 to 1050 MHz. The frequency is synthesized from a 10-MHz reference and provides an output resolution of 10 Hz over the entire frequency range. The relative frequency mode allows the frequency to be programmed in relation to a center frequency or an offset frequency. This is convenient for testing filters and mixers. The output frequency stability and accuracy depends on the reference, whether that reference is internal or external.

1-11. Reference

The internal frequency reference is a 10-MHz ambient crystal oscillator. If Option -130 High-Stability Reference or the Option -132 Medium-Stability Reference is installed, that oscillator is locked to the internal crystal oscillator. With the rear panel REF INT/EXT switch set to INT, the Generator output frequency is synthesized from the internal 10-MHz crystal oscillator reference, and the internal oscillator (timebase) signal is available at the 10 MHz OUT connector.

The Generator can be operated from an external 10-MHz timebase by setting the rear panel REF INT/EXT switch to EXT and applying a timebase signal to the REF IN connector.

With the REF INT/EXT switch set to EXT, the Generator can be operated from an external 1-, 2-, 2.5-, 5-, or 10-MHz, 0.3V to 4V peak-to-peak sine or square-wave reference applied to the REF IN connector. In either position of the INT/EXT switch, the selected reference is available as a 10-MHz signal at the rear panel 10 MHz OUT connector.

1-12. Amplitude

The Generator has a specified signal level range from +13 to -127 dBm with programming limits of +19 and -147.4 dBm. This corresponds to specified terminated voltages of 1V to 0.1 μV and limits of 2V to 0.01 μV, respectively. The maximum usable signal level is approximately +15 dBm. The level entry can be in dBm or volts, or it can be converted from one to the other. In addition, the relative amplitude mode allows you to account for cascaded gain or loss, or to display the level (in dB) relative to 1 μV or 1 mV.

1-13. Modulation

Both internal and external amplitude modulation and frequency modulation capability is available. The internal modulation oscillator is selectable between 400 Hz and 1000 Hz.

AM depths of 0% to 99% are available in 1% steps. FM deviation ranges of 1 kHz, 10 kHz, and 100 kHz are available in steps of 1 Hz, 10 Hz, and 100 Hz, respectively.

1-14. OPTIONS AND ACCESSORIES

The following options are available for the Generator:

Option -130 High-Stability (Ovened) Reference
Option -132 Medium-Stability Reference
Option -830 Rear RF OUT and MOD IN Connectors

Section 6 provides more detailed information on the options.

The following accessories are included with each Generator:

DESCRIPTION	PART NUMBER	QUANTITY
Operator Information Card	812461	1
Getting Started Manual	812503	1
Instruction Manual	893052	1
Line Power Cord	284174	1
BNC Dust Cap	478982	1

DESCRIPTION	ACCESSORY NO.
Rack Mount Kit. Includes M05-205-600 (5 1/4-inch Rack Mount Ears) and M00-280-610 (24-inch Rack Slides)	Y6001
Attenuator,50 ohms, 6 dB, BNC	Y9100
Attenuator,50 ohms, 14 dB, BNC	Y9101
Attenuator,50 ohms, 20 dB, BNC	Y9102
50 ohms Feed-through Termination, BNC	Y9103
IEEE-488 Shielded Cable, 1 meter	Y8021
IEEE-488 Shielded Cable, 2 meters	Y8022
IEEE-488 Shielded Cable, 4 meters	Y8023
Coaxial Cable, 50 ohms, 3 feet, BNC (m) both ends	Y9111
Coaxial Cable, 50 ohms, 6 feet, BNC (m) both ends	Y9112
Min-Loss Pad, 50 ohms to 75 ohms	Y9301
Adapter, N to BNC, 75 ohms	Y9307
Adapter, N to BNC, 50 ohms	Y9308
Coaxial Cable, N male to N male, 6 ft	Y9315
Cap, Non-shorting, BNC	Y9316
50 ohms Termination, N	Y9317
50 ohms Coaxial Switch	PM 2122/02
Test Team Software	PM 2240/002

1-15. RECOMMENDED TEST EQUIPMENT

The test equipment recommended for the performance tests, calibration adjustments, and troubleshooting are listed in Table 4A-1. This equipment is assumed to be calibrated to the manufacturer's specifications. If the recommended test equipment is not available, equivalent test equipment can be substituted.

1-16. MNEMONICS

The mnemonics used on the schematics, block diagrams, wiring diagrams, truth tables, and in the text, are listed in Figure 8-1.

1-17. SIGNAL GENERATOR SPECIFICATIONS

Unless otherwise noted, the following performance is guaranteed over the specified environmental and ac power line conditions 20 minutes after turn-on. Table 1-1 lists the Generator specifications for 6060B and Table 1-2 lists the Generator specifications for 6061A.

Table 1-1. Signal Generator Specifications for 6060B

Warranted performance, 20 minutes after turn-on within operating temperature range.

FREQUENCY (8 1/2-Digit Display)

RANGE	0.01 MHz to 1050.0 MHz in 3 bands: 0.01 MHz to 244.99999 MHz, 245 MHz to 511.99999 MHz, 512 MHz to 1050 MHz.
RESOLUTION	10 Hz.
ACCURACY	Same as reference (See REFERENCE).
REFERENCE (Internal)	The unit operates on an internal free-air 10-MHz crystal oscillator, aging <±0.5 ppm/month and <±10 ppm for 25°C, ±25°C. Internal reference signal (10 MHz) available at rear connector, level >0 dBm, terminated in 50 ohms.
REFERENCE (External)	Accepts 1, 2, 2.5, 5, or 10-MHz signal. Level of 0.3V to 4.0V p-p into 50 ohm termination.

AMPLITUDE (3 1/2-Digit Display)

RANGE (Indicated)	+13 (+13 peak on AM) to -127 dBm; (Autoranging 6-dB step attenuator).
RESOLUTION	0.1 dB (<1% or 1 nV in volts).
ACCURACY	±1.0 dB (20°C ±5°C) at and above 0.4 MHz; below 0.4 MHz ±2 dB at or above -100 dBm and ±3 dB below -100 dBm.
SOURCE SWR	<1.5 below 1 dBm and at or above 0.4 MHz; <2.0 elsewhere.

SPECTRAL PURITY (CW ONLY)

SPURIOUS	<-60 dBc for offsets greater than 10 kHz. Fixed frequency spurs are <-60 dBc or <-140 dBm whichever is larger. <-55 dBc for frequencies <100 kHz.
	NOTE
	"dBc" refers to decibels relative to the carrier frequency, or in this case, relative to the signal level.
HARMONICS	<-30 dBc from 0.1 MHz to 1050 MHz. <-26 dBc from 0.01 MHz to 0.1 MHz.

Table 1-1. Signal Generator Specifications for 6060B (cont)

RESIDUAL FM (rms in 0.3-kHz to 3-kHz Band)	<10 Hz for 245 MHz to 512 MHz; <20 Hz elsewhere (20°C ±5°C).
RESIDUAL FM (rms in 0.05-kHz to 15-kHz Band)	<22 Hz for 245 MHz to 512 MHz; <44 Hz elsewhere (20°C ±5°C).
RESIDUAL AM (in 0.05-kHz to 15-kHz Band)	<-60 dBc.
AMPLITUDE MODULATION (2-Digit Display)	
DEPTH RANGE	0% to 99%.
RESOLUTION	1%.
ACCURACY	±(2% + 4% of setting) for internal rates, for depths 90% or less and peak amplitude of +13 dBm or less.
DISTORTION	<1.5% total harmonic distortion (THD) to 30% AM, <3% to 70% AM, <5% to 90% AM at internal rates, except for frequency >950 MHz and carrier power >+8 dBm, where specified performance is <3% THD to 70% AM, <5% THD to 90% AM.
BANDWIDTH (3 dB)	20 Hz to 30 kHz.
INCIDENTAL FM	<0.3f_m for internal rates and 30% AM.
FREQUENCY MODULATION (3-Digit Display)	
DEVIATION RANGES	100 Hz to 999 Hz, 1 kHz to 9.99 kHz, and 10 kHz to 99.9 kHz.
MAXIMUM DEVIATION	Lesser of 99.9 kHz and 2$f_m f_o$ above 245 MHz, or 2f_m (f_o+800) below 245 MHz, where f_o is in MHz; (f_o -100)/3 kHz, below 0.4 MHz (f_o in kHz).
RESOLUTION	3 digits.
ACCURACY	±7% for rates of 0.3 kHz to 20 kHz (0.3 to 1 kHz for f_o <0.4 MHz) and >100-Hz deviation.
DISTORTION	<1% THD for rates of 0.3 kHz to 20 kHz (0.3 to 1 kHz for f_o <0.4 MHz) and >100-Hz deviation.
BANDWIDTH (3dB)	0.02 kHz to 100 kHz; unspecified for f_o <0.4 MHz.
INCIDENTAL AM	<1% AM at 1-kHz rate, to a maximum deviation or 50 kHz.

Table 1-1. Signal Generator Specifications for 6060B (cont)

MODULATION SOURCE

INTERNAL	0.4 kHz or 1 kHz, ±3% for 20°C to 30°C; add ±0.1%/°C outside this range.
EXTERNAL	±5V max.; 1V peak provides indicated modulation index. Nominal input impedance is 600 ohms.
MODES	Any combination of internal AM, internal FM, external AM, and external FM. Modulation may also be disabled. The nominal input impedance with both external AM and external FM enabled is 560 ohms.

GENERAL

TEMPERATURE	
Operating	0°C to 50°C (32°F to 122°F).
Non-Operating	-40°C to 75°C (-40°F to 167°F).
HUMIDITY RANGE	
Operating	95% to 30°C, 75% to 40°C, 45% to 50°C.
ALTITUDE	
Operating	Up to 10,000 ft.
VIBRATION	
Non-Operating	5 Hz to 15 Hz at 0.06 inch, 15 Hz to 25 Hz at 0.04 inch, and 25 Hz to 55 Hz at 0.02 inch, double amplitude (DA).
SHOCK	
Non-Operating	Bench handling per MIL T 28800C Class 5, Style E.

ELECTROMAGNETIC COMPATIBILITY ..... The radiated emissions induce <3 uV (<1 uV of the Generator's output signal) into a 1-inch diameter, 2-turn loop, 1-inch from any surface as measured into a 50-ohm receiver.

Also complies with the following standards:

CE03 of MIL-STD-461B (Power and interconnecting leads), 0.015 MHz to 50 MHz.

RE02 of MIL-STD-461B (14 kHz to 10 GHz).

FCC Part 15 (j), class A.

CISPR 11.

SIZE	Width	Height	Depth
	43 cm	13.3 cm	50.8 cm
	17 in	5.25 in	20 in

Table 1-1. Signal Generator Specifications for 6060B (cont)

POWER ..... 100, 120, 220, 240V ac ±10%, 47 to 63 Hz, <180 VA (<15 VA, with Option -130 installed, and the Generator turned off (standby).

WEIGHT ..... <15.7 kg (35 lbs).

NON-VOLATILE MEMORY

50 instrument states are retained for 2 years (typically), even without ac line power applied.

REVERSE POWER PROTECTION

PROTECTION LEVEL ..... Up to 50 watts from a 50-ohm source, 0.01 MHz to 1050 MHz. Withstands up to 50V dc. Protection is not provided when the Generator is off.

6060B OPTION -130 HIGH STABILITY REFERENCE

AGING RATE ..... $<\pm 5 \times 10^{-10}$/day, after 21 days continuous operation.

TEMPERATURE STABILITY ..... $<\pm 2 \times 10^{-10}/^{\circ}C$ (oven remains powered in standby).

6060B OPTION -132 MEDIUM STABILITY REFERENCE

AGING RATE ..... $<\pm 1 \times 10^{-7}$/month after 5 days continuous operation.

TEMPERATURE STABILITY ..... $<\pm 1 \times 10^{-7}/^{\circ}C$ (0 to 50°C) (no powered standby).

6060B OPTION -488 IEEE-488 INTERFACE (IEEE Std 488-1978)

INTERFACE FUNCTIONS ..... SH1, AH1, T5, TE0, L3, LE0, SR1, RL1, PP0, DC1, DT1, C0, and E1.

SUPPLEMENTAL CHARACTERISTICS

The following characteristics are provided to assist in the application of the Generator and to describe the typical performance that can be expected.

FREQUENCY SWITCHING SPEED ..... <70 ms to be within 100 Hz.

AMPLITUDE SWITCHING SPEED ..... <100 ms to be within 0.1 dB.

AMPLITUDE RANGE ..... Programmable to +19 dBm and -147.4 dBm, usable to +15 dBm. Fixed-range, selected by special function, allows for more than 12 dB of vernier without switching the attenuator.

NOISE (at 20-kHz offset) ..... <-122 dBc/Hz (except <-116 dBc/Hz below 245 MHz and above 512 MHz).

Table 1-1. Signal Generator Specifications for 6060B (cont)

RESIDUAL FM (rms in 0.3 to 3 kHz)	Approximately a linear function of output frequency between the following typical band-edge values: 10 Hz at 0.1 MHz to 12 Hz at 244.99999 MHz. 3 Hz at 245 MHz to 5 Hz at 511.99999 MHz. 6 Hz at 512 MHz to 12 Hz at 1050 MHz.
EXTERNAL MODULATION	Annunciators indicate when a 1V peak signal is applied, ±2%, over a 0.02-kHz to 100-kHz band.
IEEE	All controls except the power switch and the internal/external reference switch are remotely programmable via IEEE-488 Interface (Std 488-1978). All status including the option complement are available remotely. The Store/Recall memory data may be transferred via an external controller. In talk-only, the appropriate commands are generated when the front panel step-up and step-down entries are made to control another 6060B, a 6060A, a 6070A, or a 6071A. (The 6070A and 6071A only have FREQUENCY STEP.)
FREQUENCY DRIFT	<1 ppm/hr after 1-hour warmup at constant ambient temperature using internal free-air crystal.

Table 1-2. Signal Generator Specifications for 6061A

Warranted performance, 20 minutes after turn-on within operating temperature range.

FREQUENCY (8 1/2-Digit Display)

RANGE	0.01 MHz to 1050.0 MHz in 3 bands: 0.01 MHz to 244.99999 MHz, 245 MHz to 511.99999 MHz, 512 MHz to 1050 MHz.
RESOLUTION	10 Hz.
ACCURACY	Same as reference (See REFERENCE).
REFERENCE (Internal)	The unit operates on an internal free-air 10-MHz crystal oscillator, aging <±0.5 ppm/month and <±10 ppm for 25°C, ±25°C. Internal reference signal (10 MHz) available at rear connector, level >0 dBm, terminated in 50 ohms.
REFERENCE (External)	Accepts 1, 2, 2.5, 5, or 10-MHz signal. Level of 0.3V to 4.0V p-p into 50 ohm termination.

AMPLITUDE (3 1/2-Digit Display)

RANGE (Indicated)	+13 (+13 peak on AM) to -127 dBm; (Autoranging 6-dB step attenuator).
RESOLUTION	0.1 dB (<1% or 1 nV in volts).
ACCURACY	±1.0 dB (20°C ±5°C) at and above 0.4 MHz; below 0.4 MHz ±2 dB at or above -100 dBm and ±3 dB below -100 dBm.
SOURCE VSWR	<1.5 below 1 dBm and at or above 0.4 MHz; <2.0 elsewhere.

SPECTRAL PURITY (CW ONLY)

SPURIOUS	<-60 dBc for offsets greater than 10 kHz. Fixed frequency spurs are <-60 dBc or <-140 dBm whichever is larger. <-55 dBc for frequencies <100 kHz.
	NOTE
	"dBc" refers to decibels relative to the carrier frequency, or in this case, relative to the signal level.
HARMONICS	<-30 dBc from 0.1 MHz to 1050 MHz. <-26 dBc from 0.01 MHz to 0.1 MHz.
RESIDUAL FM (rms in 0.3-kHz to 3-kHz Band)	<6 Hz for 245 MHz to 511.9999 MHz; <12 Hz elsewhere.

Table 1-2. Signal Generator Specifications for 6061A (cont)

RESIDUAL FM (rms in 0.05-kHz to 15-kHz Band)	<9 Hz for 245 MHz to 511.9999 MHz; <18 Hz elsewhere.
RESIDUAL FM (CCITT Weighting) ...	<5 Hz for 245 MHz to 511.9999 MHz; <10 Hz elsewhere.
RESIDUAL AM (in 0.05-kHz to 15-kHz Band)	<-60 dBc.
AMPLITUDE MODULATION (2-Digit Display)	
DEPTH RANGE	0% to 99%.
RESOLUTION	1%.
ACCURACY	±(2% + 4% of setting) for internal rates, for depths 90% or less and peak amplitude of +13 dBm or less.
DISTORTION	<1.5% total harmonic distortion (THD) to 30% AM, <3% to 70% AM, <5% to 90% AM at internal rates, except for frequency >950 MHz and carrier power >+8 dBm, where specified performance is <3% THD to 70% AM, <5% THD to 90% AM.
BANDWIDTH (3 dB)	20 Hz to 30 kHz.
INCIDENTAL FM	<0.3f_m for internal rates and 30% AM.
FREQUENCY MODULATION (3-Digit Display)	
DEVIATION RANGES	100 Hz to 999 Hz, 1 kHz to 9.99 kHz, and 10 kHz to 99.9 kHz.
MAXIMUM DEVIATION	Lesser of 99.9 kHz and $2f_m f_o$ above 245 MHz, or $2f_m$ (f_o+800) below 245 MHz, where f_o is in MHz; (f_o -100)/3 kHz, below 0.4 MHz (f_o in kHz).
RESOLUTION	3 digits.
ACCURACY	±7% for rates of 0.3 kHz to 20 kHz (0.3 to 1 kHz for f_o <0.4 MHz) and >100-Hz deviation.
DISTORTION	<1% THD for rates of 0.3 kHz to 20 kHz (0.3 to 1 kHz for f_o <0.4 MHz) and >100-Hz deviation.
BANDWIDTH (3dB)	0.02 kHz to 100 kHz; unspecified for f_o <0.4 MHz.
INCIDENTAL AM	<1% AM at 1-kHz rate, to a maximum deviation or 50 kHz.

Table 1-2. Signal Generator Specifications for 6061A (cont)

MODULATION SOURCE	
INTERNAL	0.4 kHz or 1 kHz, ±3% for 20°C to 30°C; add ±0.1%/°C outside this range.
EXTERNAL	±5V max.; 1V peak provides indicated modulation index. Nominal input impedance is 600 ohms.
MODES	Any combination of internal AM, internal FM, external AM, and external FM. Modulation may also be disabled. The nominal input impedance with both external AM and external FM enabled is 560 ohms.
GENERAL	
TEMPERATURE	
Operating	0°C to 50°C (32°F to 122°F).
Non-Operating	-40°C to 75°C (-40°F to 167°F).
HUMIDITY RANGE	
Operating	95% to 30°C, 75% to 40°C, 45% to 50°C.
ALTITUDE	
Operating	Up to 10,000 ft.
VIBRATION	
Non-Operating	5 Hz to 15 Hz at 0.06 inch, 15 Hz to 25 Hz at 0.04 inch, and 25 Hz to 55 Hz at 0.02 inch, double amplitude (DA).
SHOCK	
Non-Operating	Bench handling per MIL T 28800C Class 5, Style E.
IEEE-488 INTERFACE FUNCTIONS	SH1, AH1, T5, TE0, L3, LE0, SR1, RL1, PP0, DC1, DT1, C0, and E1.
ELECTROMAGNETIC COMPATIBILITY	The radiated emissions induce <3 uV (<1 uV of the Generator's output signal) into a 1-inch diameter, 2-turn loop, 1-inch from any surface as measured into a 50-ohm receiver.

Also complies with the following standards:

CE03 of MIL-STD-461B (Power and interconnecting leads), 0.015 MHz to 50 MHz.

RE02 of MIL-STD-461B (14 kHz to 10 GHz).

FCC Part 15 (j), class A.

CISPR 11.

Table 1-2. Signal Generator Specifications for 6061A (cont)

SIZE	Width	Height	Depth
	43 cm	13.3 cm	50.8 cm
	17 in	5.25 in	20 in

POWER ..... 100, 120, 220, 240V ac ±10%, 47 to 63 Hz, <180 VA (<15 VA, with Option -130 installed, and the Generator turned off (standby).

WEIGHT ..... <15.7 kg (35 lbs).

NON-VOLATILE MEMORY

50 instrument states are retained for 2 years (typically), even without ac line power applied.

REVERSE POWER PROTECTION

PROTECTION LEVEL ..... Up to 50 watts from a 50-ohm source, 0.01 MHz to 1050 MHz. Withstands up to 50V dc. Protection is not provided when the Generator is off.

OPTION -130 HIGH STABILITY REFERENCE

AGING RATE ..... $<\pm 5 \times 10^{-10}$/day, after 21 days continuous operation.

TEMPERATURE STABILITY ..... $<\pm 2 \times 10^{-10}/^{\circ}C$ (oven remains powered in standby).

OPTION -132 MEDIUM STABILITY REFERENCE

AGING RATE ..... $<\pm 1 \times 10^{-7}$/month after 5 days continuous operation.

TEMPERATURE STABILITY ..... $<\pm 1 \times 10^{-7}/^{\circ}C$ (0 to 50°C) (no powered standby).

SUPPLEMENTAL CHARACTERISTICS

The following characteristics are provided to assist in the application of the Generator and to describe the typical performance that can be expected.

FREQUENCY SWITCHING SPEED ..... <70 ms to be within 100 Hz.

AMPLITUDE SWITCHING SPEED ..... <100 ms to be within 0.1 dB.

AMPLITUDE RANGE ..... Programmable to +19 dBm and -147.4 dBm, usable to +15 dBm. Fixed-range, selected by special function, allows for more than 12 dB of vernier without switching the attenuator.

NOISE (at 20-kHz offset) ..... <-122 dBc/Hz (except <-116 dBc/Hz below 245 MHz and above 512 MHz).

RESIDUAL FM (rms in 0.3 to 3 kHz) 5 Hz for 245 MHz to 511.99999 MHz; 10 Hz elsewhere.

Table 1-2. Signal Generator Specifications for 6061A (cont)

EXTERNAL MODULATION	Annunciators indicate when a 1V peak signal is applied, ±2%, over a 0.02-kHz to 100-kHz band.
IEEE	All controls except the power switch and the internal/external reference switch are remotely programmable via IEEE-488 Interface (Std 488-1978). All status including the option complement are available remotely. The Store/Recall memory data may be transferred via an external controller. In talk-only, the appropriate commands are generated when the front panel step-up and step-down entries are made to control another 6061A, a 6060B, a 6060A, a 6070A, or a 6071A. (The 6070A and 6071A only have FREQUENCY STEP.)
FREQUENCY DRIFT	<1 ppm/hr after 1-hour warmup at constant ambient temperature using internal free-air crystal.

Section 2
Installation and Operation

2-1. INTRODUCTION
This section describes how to install and operate the Generator. This section contains information for an initial inspection, setting up the instrument, and local and remote operation.

2-2. INITIAL INSPECTION
The Generator is shipped in a special protective container that should prevent damage during shipment. Check the shipping order against the contents of the container, and report any damage or short shipment to the place of purchase or the nearest Fluke Technical Service Center. Instructions for inspection and claims are included on the shipping container.

If reshipment of the Generator is necessary, please use the original shipping container. If the original container is not available, use a container that provides adequate protection during shipment. It is recommended that the Generator be surrounded by at least three inches of shock-absorbing material on all sides of the container. Do not use loose fill to pad the shipping container. Loose fill allows the Generator to settle to one corner of the shipping container, which could result in the Generator being damaged during shipment.

2-3. SETTING UP THE GENERATOR
The following paragraphs describe how to set up the Generator for operation. This information includes: line power requirements, line voltage selection procedures, fuse replacement procedures, and rack mounting instructions.

2-4. Line Power Requirements
The Generator uses a line voltage of 100 or 120V ac rms (± 10%) with a 1.5A fuse; or 220V or 240V ac (± 10%) with a 0.75A fuse. The line frequency must be between 48 to 63 Hz. The power consumption of the instrument is <180 VA with a full option complement.

2-5. Line Voltage and Fuse Selection

CAUTION

Verify that the intended line power source matches the line voltage setting of your Generator before plugging in the line power cord.

Refer to Figure 2-1 to set the line voltage of the Generator to match your available source. Figure 2-1 also shows how to replace the line fuse of the Generator. The correct fuse value for each of the four line voltages is listed on a plate attached to the rear panel of the Generator.

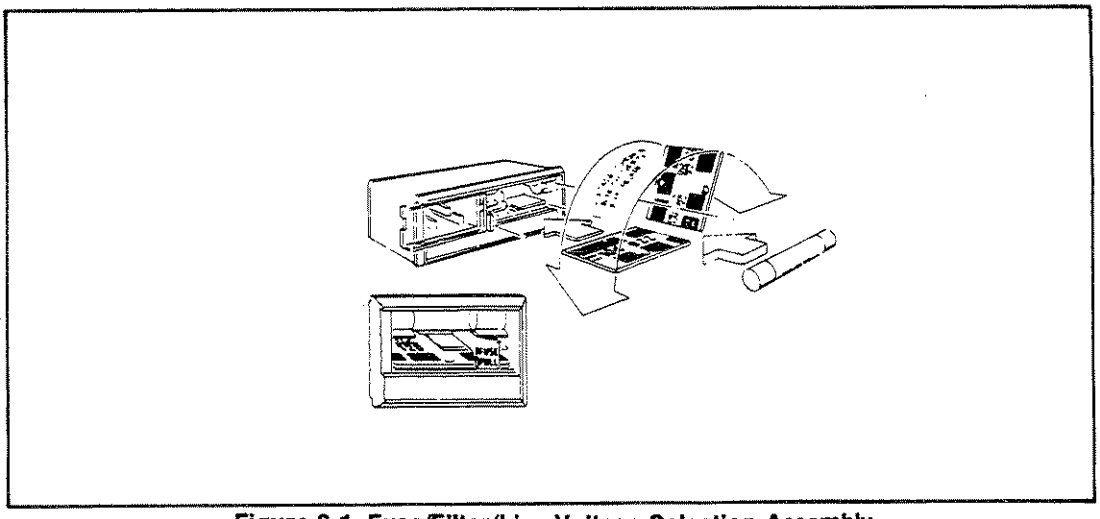

Figure 2-1. Fuse/Filter/Line Voltage Selection Assembly

2-6. IEEE-488 Address

The IEEE-488 address can be selected using the switches located next to the IEEE-488 connector on the rear panel. Talk-only and listen-only modes can also be selected on this switch.

2-7. RACK OR BENCH MOUNTING THE GENERATOR

CAUTION

Allow at least 3 inches of clearance behind and on each side of the Generator to ensure proper air circulation.

To meet the specified radiated emissions, the IEEE-488 connector must be terminated with a shielded IEEE-488 cable, such as a Fluke Y8021.

The Generator normally operates on an internal reference oscillator. However, if desired, the Generator can be operated on an external reference by setting the rear panel REF INT/EXT switch to EXT and connecting the external reference to the REF IN connector.

CAUTION

When operating on the internal reference, a 10-MHz signal is present at the 10 MHz OUT connector on the rear panel. To meet the specified radiated emissions, this connector must be terminated with a BNC non-shorting dust cap. A dust cap, JF 478982, is supplied with the Generator. If a cable is connected, it must be a double-shielded coaxial cable such as RG-223 terminated in a 50Ω load.

CAUTION

Output spectral degradation occurs if the Generator is operated on internal reference with an external reference signal applied.

The Generator may be placed directly on a work bench or mounted in a standard (24-inch deep) equipment rack. Use the Fluke Y6001 Rack Mount Kit for mounting the Generator on an equipment rack. Instructions for installing the Generator with the Rack

Mount Kit are provided in the kit. The outside dimensions of the Generator are shown in Figure 2-2. The Rack Mount Kit is composed of the following parts:

5-1/4-inch Rack Adapter, P/N M05-205-600
24-inch Rack Slides, P/N M00-280-610

2-8. GENERAL OPERATING INFORMATION

The following paragraphs contain general information on the operation of the Generator. This includes all the information required to familiarize the you with the instrument and the differences between local and remote operation.

2-9. Familiarization

Figure 2-3 shows the front panel controls, indicator, and connectors and Table 2-1 describes the features.

Figure 2-4 shows the rear panel controls, connectors, and switches and Table 2-2 describes the features.

2-10. Local Verses Remote Operation

There are two modes of controlling the output of the Generator. One mode uses the keys on the front panel; this is called local operation. The other mode is when an IEEE-488 controller is used to control the Generator. This is referred to as remote operation. An overview of local control is presented first. The next heading, Operating Reference Material, is divided into two parts. The first part covers local and remote control operations that have similar entry methods. The second part, Remote Operation, contains information on commands or descriptions that pertain only to remote operations.

2-11. Power-On Sequence

When the Generator is turned on, a power-on sequence is started. During the power-on sequence, the microprocessor tests the analog circuitry, the program ROM, the scratch-pad RAM, and the front panel displays. The front panel displays are tested by lighting all segments for a brief period at the same time the rest of the self tests are performed.

If any of the self tests fail, an error code is displayed. If the operator initiates any front panel entry before the power-on sequence is completed, the self test is aborted, and the Generator is set to the state it was in when turned off. Table 2-3 lists the Instrument Preset State. In addition, the RF output is turned on. Power-on instrument settings that relate to the IEEE-488 Interface are described in the Remote Operation paragraphs in this section. More detail on Power-on Self Tests are explained in Section 4D.

2-12. Changing Output Parameters

The four parameters of the Generator (i.e., frequency, amplitude, amplitude modulation (AM), and frequency modulation (FM)) may be changed by one of three methods:

FUNCTION-DATA-UNIT
Bright-Digit Edit
Step Entry

These different methods all accomplish the same result but use different approaches. The reason for this apparent redundancy is to reduce the chance of error during complex test procedures that require continuously resetting parameters or in those cases when a test is partly under remote control and only some of the parameters require changes.

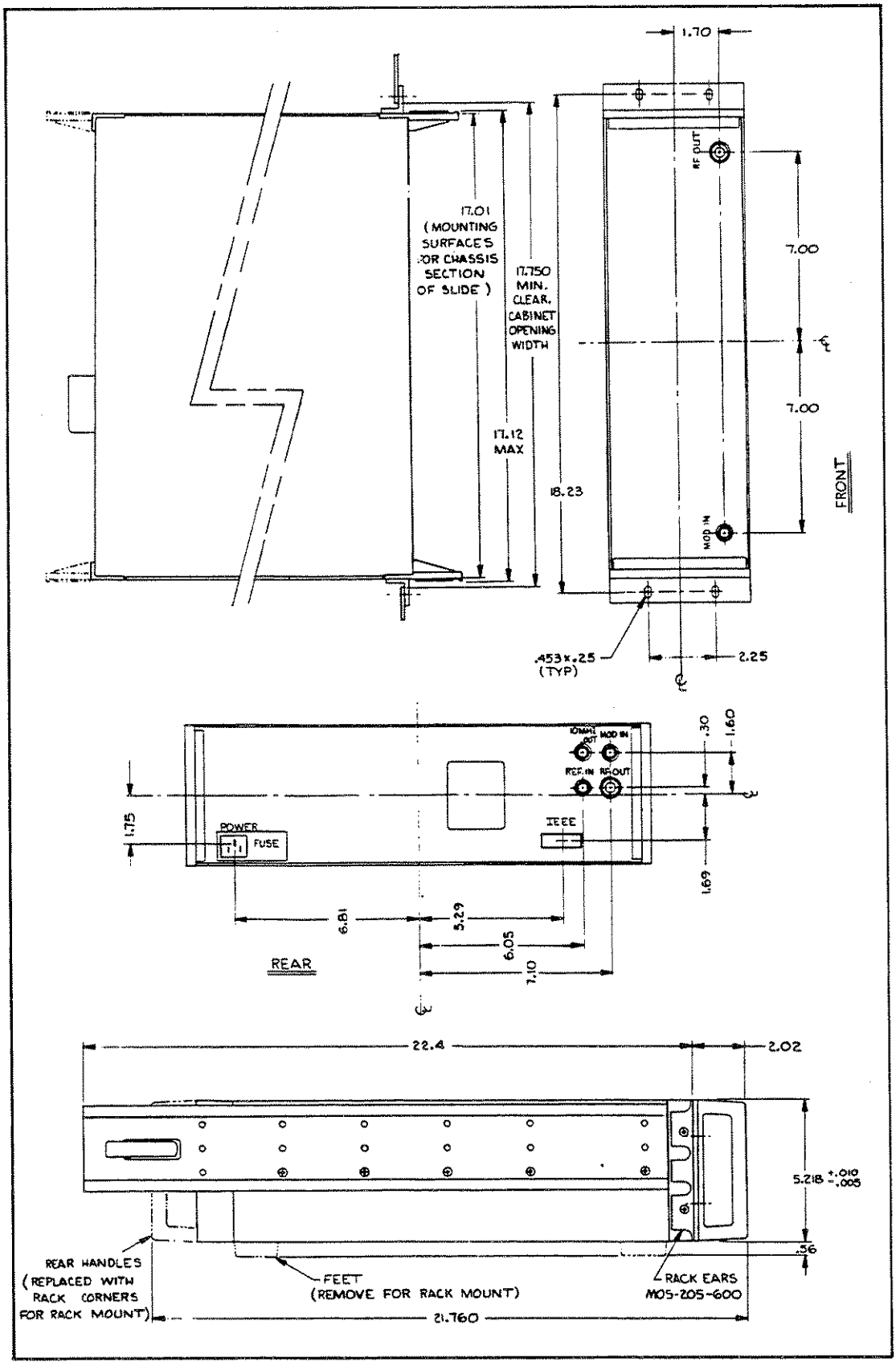

Figure 2-2. 6061A Outside Dimensions

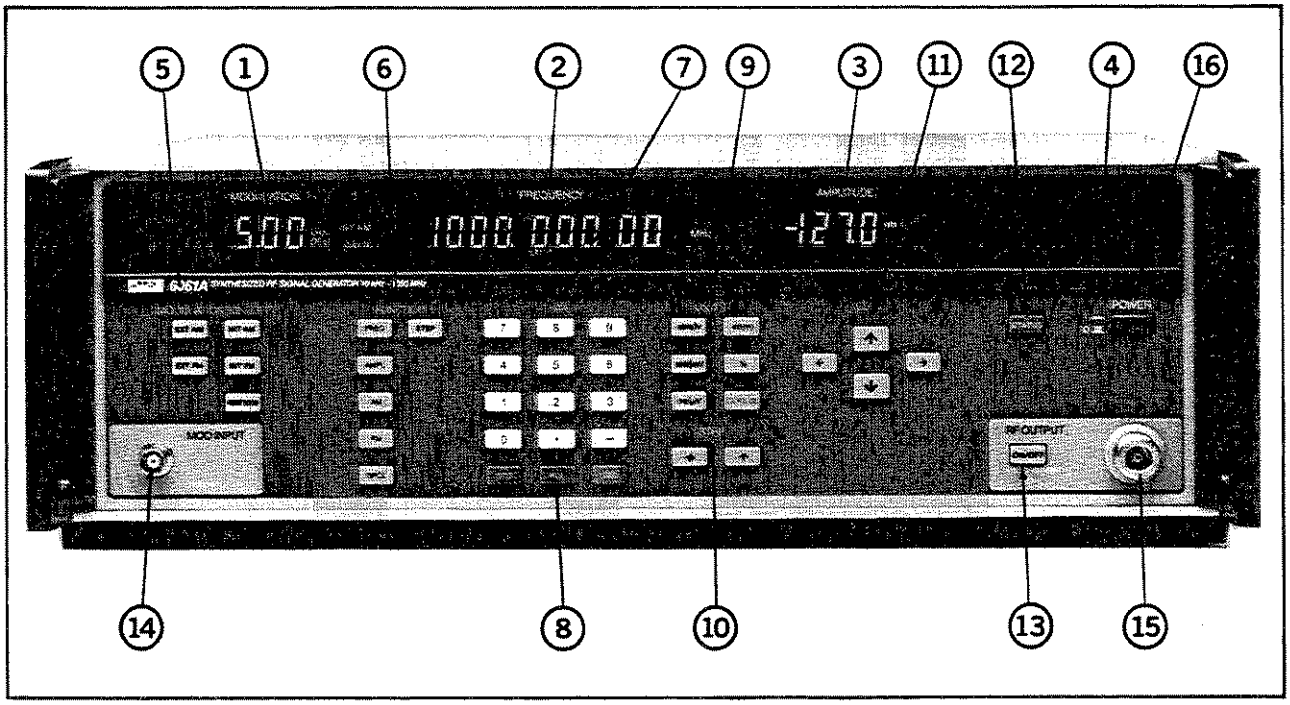

Figure 2-3. Front Panel Controls, Indicators, and Connectors

Table 2-1. Front Panel Controls, Indicators, and Connectors

1	MODULATION DISPLAY FIELD	A three-digit display, with associated indicators used to display the AM depth, FM deviation, source of modulation signal, and modulation frequency.
	INT AM	Indicates that the internal modulation oscillator signal is amplitude modulating the Generator.
	EXT AM	Indicates that the Generator is amplitude modulated by the signal connected to the MOD INPUT connector.
	INT FM	Indicates that the internal modulation oscillator signal is frequency modulating the Generator.
	EXT FM	Indicates that the Generator is frequency modulated by the signal connected to the MOD INPUT connector.
	STEP	Indicates that the Step [↑] or [↓] keys (Step Entry) affect the current Modulation display value.
	%	Indicates that the value displayed is the AM Depth in percent.
	kHz DEV	Indicates that the value displayed is the FM Deviation in kHz.
	400 Hz	Indicates that the internal modulating frequency is 400 Hz.
	1000 Hz	Indicates that the internal modulating frequency is 1000 Hz.
	EXT HI	Indicates that the external modulation signal is more than 2% above the nominal 1V peak requirement for calibrated operation.
	EXT LO	Indicates that the external modulation signal is more than 2% below the nominal 1V peak input requirement.

Table 2-1. Front Panel Controls, Indicators, and Connectors (cont)

(2)	FREQUENCY DISPLAY FIELD	An 8 1/2-digit display, with two indicators used to display the output frequency of the Generator. Also used to display the special function code, status error codes, or the memory location being stored or recalled, as well as relative and actual frequency, when 'REL' is lit, and step frequency.
	STEP	Indicates that the Step [↑] or [↓] keys (Step Entry) affect the output frequency.
	REL	Indicates that the displayed frequency is relative to a reference frequency.
(3)	AMPLITUDE DISPLAY FIELD	A 3 1/2-digit (and sign) display, with six indicators, used to display the output amplitude of the Generator into a 50-ohm load.
	STEP	Indicates that the Step [↑] or [↓] keys (Step Entry) affect the output amplitude.
	REL	Indicates that the displayed amplitude is relative to a reference amplitude.
	dBm	Indicates that the output amplitude is in decibels relative to one milliwatt.
	V	Indicates that the output amplitude is in volts.
	uV	Indicates that the output amplitude is in microvolts.
	mV	Indicates that the output amplitude is in millivolts.
(4)	STATUS DISPLAY FIELD	(Shown unlit.) The status display field is composed of 11 indicators used to denote the current status of the Generator or instrument entry.
	EXT REF	Indicates that the rear panel REF switch is in the EXT (external) position.
	REJ ENTRY	Lights when an invalid entry is made.
	UNCAL	Lights when a parameter entry is outside its specified range. This indicator flashes when any of the internal DACs have over- or under-flowed or when any abnormal operation is detected.
	RF OFF	Lights when the RF OUTPUT is disabled.
	REMOTE	Lights when the Generator is in the remote (IEEE-488 Interface) mode of operation.
	ADDR	Lights when the Generator is addressed to listen or talk.
	SRQ	Lights when the Generator has asserted the IEEE-488 SRQ signal.
(5)	MODULATION ON/OFF	Used to select type, source, and frequency of modulation. With the exception of the [400/1000] key, these keys operate as independent push-on/push-off switches for the given function. Any combination is allowed.
	INT AM	Enables internal amplitude modulation at the frequency annunciated by the '400/1000' Hz indicator.

Table 2-1. Front Panel Controls, Indicators, and Connectors (cont)

	INT FM	Enables internal frequency modulation at the frequency annunciated by the '400/1000' Hz indicator.
	EXT AM	Enables external amplitude modulation using the signal applied to the MOD INPUT connector.
	EXT FM	Enables external frequency modulation using the signal applied to the MOD INPUT connector.
	400/1000	Alternately sets the internal modulation oscillator's frequency to 400 or 1000 Hz. The selected frequency is displayed only when INT AM or INT FM is enabled.
(6)	FUNCTION	With the exception of the [STEP] and [SPCL] keys, these keys operate as interlocked switches that select the parameter to be entered or edited. For the [FREQ], [AMPL], [AM], and [FM] FUNCTION keys, the bright digit appears in the corresponding display of the selected function.
	FREQ	Selects the frequency parameter of the Generator to be programmed by using the DATA, EDIT, or STEP entry keys.
	AMPL	Selects the amplitude parameter of the Generator to be programmed by using the DATA, EDIT, or STEP entry keys.
	AM	Selects the amplitude modulation (AM) parameter of the Generator to be programmed by using the DATA, EDIT, or STEP entry keys.
	FM	Selects the frequency modulation (FM) parameter of the Generator to be programmed by using the DATA, EDIT, or STEP entry keys.
	SPCL	Enables the special function mode. Special functions are called up by a two-digit code, that is entered by using the DATA keys. Refer to the paragraphs on Special Function in this section for a detailed description and a list of the special functions.
	STEP	After one of the four parameter functions has been selected for programming, pressing this key allows you to program a step-wise change to that parameter. The step increase or decrease is then performed every time the STEP [↑] or [↓] keys are pressed.
(7)	DATA	A ten-digit (plus sign and decimal key) keypad used for entering a parameter's value, the special function code, or a memory recall/store location.
(8)	Memory	
	STO	Used with the DATA keys to store the current instrument state in a memory location. Memory locations 01 through 50 are available.
	RCL	Used with the DATA keys to recall an instrument state from a memory location. Memory locations 01 through 50 are available for operator-stored states; memory location 98 contains the Instrument Preset State (see Table 2-3.)

Table 2-1. Front Panel Controls, Indicators, and Connectors (cont)

SEQ	Sequentially recalls, in increasing location order, the instrument states stored in memory. While the [SEQ] key is pressed, successive memory locations are displayed. When the key is released, the location last displayed is recalled.
(9) UNITS	These keys, with the exception of [CLR/LCL], serve as the terminating keystroke of a function entry, thereby causing the Generator to be programmed. The amplitude units keys are also used during Amplitude Units Conversion entries.
MHz/V	Used with the [FREQ], [FM], and [AMPL] function keys to program the numerical DATA entries in terms of megahertz (frequency or frequency modulation) or volts (amplitude).
dB(m)	Used with the [AMPL] function key to program the numerical DATA entries in terms of decibels per milliwatt.
kHz/mV	Used with the [FREQ], [FM], and [AMPL] function keys to program the numerical DATA in terms of kilohertz (frequency or frequency modulation) or millivolts (amplitude).
%	Used with the [AM] function key to program the numerical DATA entries in terms of percentage AM depth.
Hz/uV	Used with the [FREQ], [FM], and [AMPL] function keys to program the numerical DATA in terms of hertz (frequency or frequency modulation) or microvolts (amplitude).
CLR/LCL	When the Generator is in local operation, this key is used to clear the current entry and returns the Generator to the previous state. When the instrument is in remote operation, this key is used to return local control.
(10) STEP	These two keys work in conjunction with the STEP Function key. These keys repeat while they remain pressed.
[↑]	After a parameter is set to the step function mode, and the 'STEP' indicator appears in the display field, this key increments the parameter by the step value previously programmed.
[↓]	After a parameter is set to the step function mode, and the 'STEP' indicator appears in the display field, this key decrements the parameter by the step value previously programmed.
(11) EDIT	These keys are used to position the bright digit within a display field and to increase or decrease the bright digit value. All four keys repeat while they remain pressed. The function keys are used to move the bright digit to the desired display field.
[↑]	Increases the bright-digit value.
[←]	Moves the bright digit one digit to the left.
[↓]	Decreases the bright-digit value.
[→]	Moves the bright digit one digit to the right.

Table 2-1. Front Panel Controls, Indicators, and Connectors (cont)

(12)	STATUS	A push-and-hold key that displays the Uncal and Reject Entry status codes in the MODULATION, FREQUENCY, and AMPLITUDE display fields.
(13)	ON/OFF	A push-on/push-off key (with a corresponding 'RF OFF' indicator in the STATUS display filed) that enables or disables the output of the Generator.
(14)	Connector	A BNC connector for input of a 1V peak, external modulation signal.
(15)	Connector	A standard RF connector at the output of the Generator.
(16)	POWER	A push-on/push-off detent switch that applies line power to the Generator.

2-13. Function Entry

Changing an instrument parameter with the FUNCTION-DATA-UNIT entry method of consists of:

Selecting the Function to be changed
Entering the new numerical value of the parameter
Selecting the Units of the numerical value (megahertz, millivolts, etc).

The command syntax for function entries is:

Select Function – Enter Data – Select Unit

1. Select one of the four parameters using the FUNCTION keys. The bright digit appears in the corresponding display field. The presence of the bright digit in the display field indicates that the value of the selected parameter is ready to be programmed or changed.

2. Enter the data with the DATA keys. The numerics appear in the appropriate display field.

3. Select a UNIT key. This gives the data its absolute value, and causes the microprocessor to internally program the Generator to the new state.

For the amplitude and frequency functions, the entered data programs the displayed value. If the relative mode is enabled, the displayed value may be different from the actual output value.

Once a function is selected, that parameter or feature remains in the active programming mode until a new function is selected. Data for a selected parameter must be followed by a unit value and must be within the range specified for the function. The display field flashes and, the 'REJ ENTRY' status indicator flashes if the entered data is not within the specified range. A rejected entry does not affect the output of the Signal Generator. The output of the Generator remains at its previous values until a new value is accepted.

A function entry may be terminated at any time by the [CLR|LCL] key or by selecting another function.

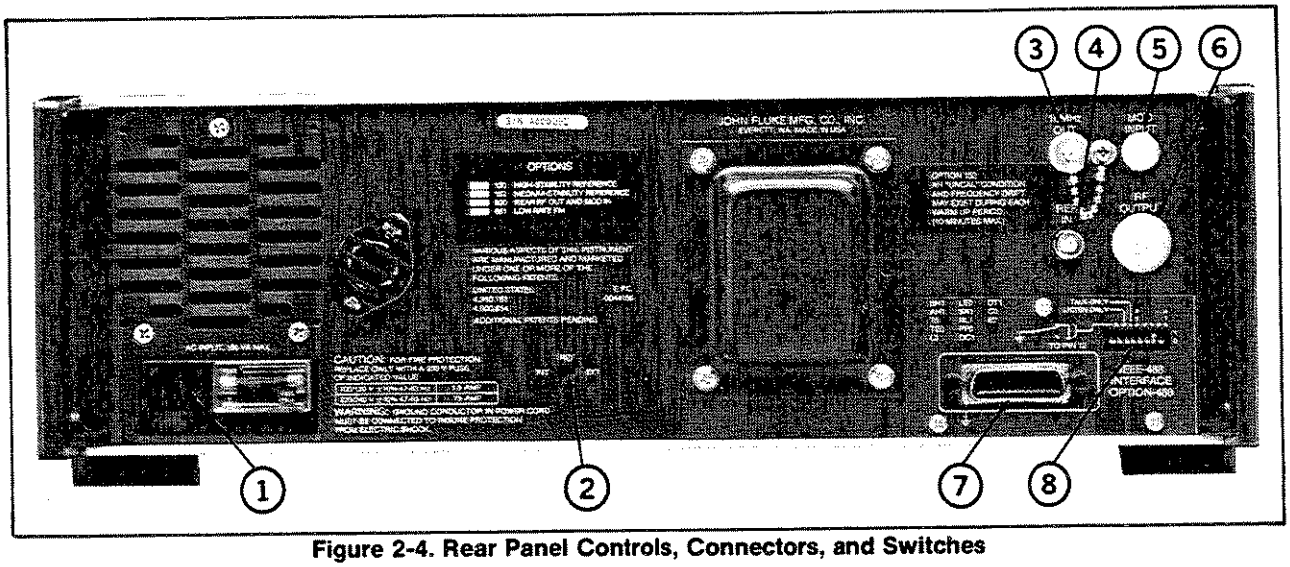

Figure 2-4. Rear Panel Controls, Connectors, and Switches

Table 2-2. Rear Panel Controls, Connectors, and Switches

1	AC INPUT	Permits operation from 100, 120, 220, or 240V ac. The number visible through the window on the selector card indicates the nominal line voltage to which the Generator must be connected. The line voltage is selected by orienting the selector card appropriately. A 1 1/2-ampere fuse is required for 100/120V operation; a 3/4-ampere fuse is required for 220/240V operation.
2	REF INT/EXT	Permits selection of the Generator frequency reference. When set to INT, the Generator operates on the internal reference, which is either the standard oscillator or the high-stability oscillator if either of the High-Stability References is installed. In either case, the internal 10-MHz reference signal is available at the 10 MHZ OUT connector. When set to EXT, the Generator reference is a 1, 2, 2.5, 5, or 10-MHz signal applied to the external REF IN connector.
3	10 MHZ OUT	10-MHz sine wave, >0 dBm level when terminated in 50 ohms.
4	REF IN	Accepts a 1, 2, 2.5, 5, or 10-MHz, 0.3V to 4V p-p sine wave or square wave signal into nominally 50 ohms.
5	MOD INPUT	Connector (BNC) is present only with the REAR RF OUT and MOD IN option to accept a 1V peak external modulation signal.
6	RF OUTPUT	Connector (type N) is present only with the REAR RF OUT and MOD IN option to provide the Generator output signal.
7	IEEE CONNECTOR	Allows remote operation of the Generator via the IEEE-488 bus.
8	IEEE ADDRESS SWITCH	Allows the selection of the Generator bus address.

2-14. Bright-Digit Edit Operation

Changing an instrument parameter by the edit entry method is the fastest way to make vernier (incremental) changes to one of the four parameters. The EDIT keys are used with the four parameter FUNCTION keys to position the bright digit in the desired display field and then increase or decrease the bright-digit value.

The command syntax for bright-digit edit entries is:

Select Display Field -- Position Bright Digit -- Change Bright-Digit Value

1. Use one of the four FUNCTION keys to position the bright digit in the appropriate display field.

2. Use the [→] or [←] EDIT keys to position the bright digit to the desired resolution, and use the [↑] or [↓] EDIT keys to increase or decrease the value of the bright digit.

The position of the bright digit within a display field is maintained when the bright digit is moved from one display field to another.

The repeat rate of the [↑] or [↓] EDIT keys may be changed to a faster or slower rate (a medium repeat rate is the default) with a special function code. Refer to the paragraphs on Special Function and the reference pages in this section for the method and code.

2-15. Step Operation

Changing parameters by the Step Entry method allows you to preset step-wise increments of a parameter then change that parameter (by the amount programmed in the step function) [↑] or [↓] with a single keystroke.

The command syntax for step entries is:

Select Step Function -- Enter Data -- Select Units -- Change Parameter

1. Select the parameter to be changed step-wise using one of the FUNCTION key.

2. Press the [STEP] key to enable the Step function.

3. Program the step amount using the DATA and UNIT keys.

4. The parameter value can now be changed, up or down by the programmed step amount by using the [↑] or [↓] STEP keys.

While the [STEP] key is pressed, the display field of the selected parameter shows the step amount. The 'STEP' indicator is lit in the display field currently affected by the [STEP] key.

The repeat rate of the [↑] or [↓] STEP keys may be changed to a faster or slower rate (a medium repeat rate is the default) with a Special Function code. Refer to the paragraphs on Special Functions and the reference material for the method and code.

A step entry is ignored when the result of that step entry would cause the value of the parameter to exceed its programmable limit.

2-16. Status and Clear Entries

The Status entry allows you to interrogate the Generator for an explanation of uncalibrated or rejected entry operation ('UNCAL' or 'REJ ENTRY') indicator is lit. Refer to the paragraphs on Status and Clear Entry in the reference section for a complete list of status codes.

The [CLR|LCL] key may be used to clear a partial DATA entry or clear the flashing 'REJ ENTRY' indicator.

2-17. RF Output On/Off

The RF OUTPUT [ON/OFF] key allows the operator to enable or disable the RF output of the Generator. This feature is useful in zeroing a power meter, finding the noise floor of a system, or determining the presence or source of an unknown signal.

On power-up, the RF output of the Generator assumes the state it was in when the Generator was turned off. Pressing the RF OUTPUT [ON/OFF] key disables the output of the Generator and causes the 'RF OFF' indicator (in the STATUS display field) to light. If the RF ON/OFF was off at power-on, pressing the [ON/OFF] key will enable output.

2-18. Modulation On/Off and Rate

The MODULATION ON/OFF keys allow you to select any combination of modulation or no modulation. The MODULATION display field indicates what combination of modulation has been selected. Each modulation key is a push-on push-off type (except the [400/1000] key).

The [400/1000] key toggles the internal modulation oscillator between 400 and 1000 Hz. The '400 Hz' and '1000 Hz' indicators are lit only when INT AM or FM modulation is enabled.

2-19. Memory

Memory entry using the [STO] key allows you to save up to 50 complete front panel settings for later recall.

The command syntax for memory operations follows. No memory location needs to be specified for the sequence operation.

Select Memory Function -- Enter Memory Location

To store the current front panel setting, press the [STO] key (located below the DATA keys). The last memory location stored or recalled is displayed in the FREQUENCY display field. Next, use the DATA keys to enter the two-digit memory location code. The location code must contain both digits (e.g., 01, 02, ...50). The two-digit code appears in the FREQUENCY display field as it is entered.

To recall a front panel setting, press the [RCL] key (located below the DATA keys). The last memory location stored or recalled is displayed in the FREQUENCY display field. Next, use the DATA keys to enter the memory location code of the desired front panel setting. Remember, the location code must contain both digits of the memory location code.

Memory location 98 contains the Instrument Preset State that can be recalled at any time.

The [SEQ] key allows the front panel settings stored in memory to be sequentially recalled. This process is activated by pressing the [SEQ] key at any time. When the [SEQ]

key is pressed, the memory location code of the currently recalled setting appears in the FREQUENCY display field, and the location is recalled. When the last memory location is reached (50), the [SEQ] key starts over at 01. The [SEQ] key repeats while pressed.

2-20. Special Function

Special Function Entries allow the operator to enable several special operating functions in the Generator. For example, special functions allow the operator to change the repeat rate of the STEP and EDIT keys, start the self tests, display the results of the power-up self tests, display the IEEE-488 address, enable relative and fixed-range features, and disable or enable special attenuation features. A complete list of the special functions available is presented in Table 2-4.

The command syntax for special function entries is as follows:

Select Special Function – Enter Special Function Code

The special function is selected by pressing the [SPCL] key. The special function code is entered using the DATA keys.

2-21. OPERATING REFERENCE MATERIAL

This reference section describes local and remote operation for each Generator function. The functions are arranged in alphabetical order. For each function, the syntax of the command, allowable data ranges, and other information is presented.

2-22. Amplitude and Frequency Entry

The following information describes how to control the carrier frequency and amplitude by the FUNCTION-DATA-UNIT entry sequence. This method applies to both normal and relative operations. The frequency display is a fixed-point display in MHz. The amplitude display is fixed point while displaying dBm but is floating point when displaying voltage units.

The RF OUTPUT [ON/OFF] must be enabled for the Generator to produce an output (see the reference material on RF OUTPUT ON/OFF Entry).

Command Syntax

Select Function – Enter Data – Select Unit

Summary

	COMMAND			RANGE	RESOLUTION	NOTES
Set Frequency						
Local:	[FREQ]	-- DATA --	[MHz|V] [kHz|mV] [Hz|uV]	0.01 to 1050 MHz	10 Hz	1,2
Remote:	"FR"	-- float --	"GZ" "MZ" "KZ" "HZ"	0.01 to 1050 MHz	10 Hz	1,3

Table 2-4. Special Functions

SPECIAL FUNCTION	OPERATION
00	Clears all currently set special functions.
02	Initiates self tests.
03	Display test. This test is detailed in Section 3.
04	Key test. This test is detailed in Section 3.
07	Set SRQ.
08	Reset SRQ.
09	Display instrument software revision level. Information appears in the MODULATION and FREQUENCY display fields for approximately 3 seconds or until another key is pressed.
10	Display IEEE-488 mode and address in decimal form.
11	Display self-test results. Zeros in the display fields indicate that the self tests have passed. See Section 4 for details of the self-test display.
12	Turn on displays.
13	Turn off all displays. All other functions still operate.
14	Initialize memory locations to Instrument Preset State. 'Sto' appears in the FREQUENCY display field for 3 seconds. If during this time, the [STO] key is pressed, all memory locations are initialized.
15	Latch test. This test is detailed in Section 4.
16	Display option loading. See "Interrogate Commands" in Section 2 for details.
17	Initiate self tests in troubleshoot mode. Stop at each self test that fails and display code for tests that have failed so far. Press any button to continue tests. CAUTION: The RF output may be programmed to levels as high as +19 dBm during this test.
20	Disable Relative Frequency. See reference page on Relative Function.
21	Enable Relative Frequency. See reference page on Relative Function.
30	Disable Relative Amplitude. See reference page on Relative Function.
31	Enable Relative Amplitude. See reference page on Relative Function.
70	Set repeat rate for EDIT and STEP keys to medium.
71	Set repeat rate for EDIT and STEP keys to fast.
72	Set repeat rate for EDIT and STEP keys to slow.
80	Enable Amplitude correction. Normal operation.
81	Disable Amplitude correction. If level accuracy is not critical, level correction circuitry can be disabled for improved programming speed. Level accuracy may be up to 7 dB low.
82	Disable attenuator correction. Useful as a troubleshooting tool. RF input to attenuator is flat.
83	Program alternate 24 dB attenuation. See Section 4.
84	Program alternate 24 dB attenuation. See Section 4.
85	Program alternate 24 dB attenuation. See Section 4.
86	Program alternate 24 dB attenuation. See Section 4.
90	Disable Amplitude Fixed Range. See reference material on Amplitude Fixed Range.
91	Enable Amplitude Fixed Range. See reference material on Amplitude Fixed Range.

```
Set Amplitude

    Local:  [AMPL] -- DATA  -- [dB(m)]     -127 to +13 dBm  0.1 dBm   2,4,5
                               [MHz|V]     0.1 uV to 1 V    3 digits
                               [kHz|mV]
                               [Hz|uV]

    Remote: "AP"   -- float -- "DB"        -127 to +13 dBm  0.1 dBm   3,4,5
                               "V"         0.1 uV to 1 V    3 digits
                               "MV"
                               "UV"
                               "NV"
```

Example

Set Frequency to 10.7 MHz and Amplitude to -7.5 dBm.

```
Local:  [FREQ] [1] [0] [.] [7] [MHz|V]
        [AMPL] [-] [7] [.] [5] [dB(m)]

Remote: "FR10.7MZ,AP-7.5DB"
```

Notes

1. Frequency ranging occurs at 245 and 512 MHz.

2. FUNCTION ([FREQ] or [AMPL]) remains selected until another FUNCTION or [STEP], [STO], [RCL], or [SPCL] is pressed.

3. float equals floating-point number.

4. Amplitude uncalibrated range from -147.4 to -127.1 dBm and from +13.1 to +19 dBm.

5. Amplitude ranging occurs at 1/2V, 1/4V, 1/8V, ... $1/2^{23}$V with AM off and 1/4V, 1/8V, 1/16V, ... $1/2^{24}$ V with AM on.

Related Operations

Amplitude Fixed Range
Bright-Digit Edit Entry
Relative Function
Step Entry

2-23. Amplitude Fixed Range

The following information describes how to use the Fixed-Range special function. This special function fixes the current amplitude range (holds the currently selected step of the Step Attenuator). This function allows monotonic and nontransient level control over a limited range around those levels where the Step Attenuator normally autoranges. This level control may be accomplished with the Bright-Digit Edit Entry only.

The level vernier in fixed range has at least 12 dB of range.

Command Syntax

Select Fixed Range – Enable or Disable

Summary

COMMAND	NOTES
Enable Fixed Range	
Local: [SPCL] [9] — [1]	1
Remote: "SP" "9" — "1"	
Disable Fixed Range	
Local: [SPCL] [9] — [0]	2
Remote: "SP" "9" — "0"	

Example

Set the Generator for monotonic and nontransient amplitude control (Bright-Digit Edit only) over the range of the vernier level control below 0.25V.

```
Local:  [AMPL] [.] [2] [5] [MHz|V]   [SPCL] [9] [1]

Remote: "AP.25V;SP91"
```

Notes

1. The amplitude range is fixed only for Bright-Digit Edit operations. Other methods of changing the amplitude cause the step attenuator to autorange if necessary.

2. With amplitude fixed range disabled, amplitude ranging occurs at 1/2V, 1/4V, 1/8V, ... $1/2^{23}$ V with AM off and 1/4V, 1/8V, 1/16V, ... $1/2^{24}$ V with AM on.

Related Operations

Bright-Digit Edit Entry
Relative Function

2-24. Amplitude Units Conversion

The following information describes how to convert the displayed amplitude level from dBm to volts and volts to dBm. The output of the Generator does not change during these operations.

Command Syntax

Select Amplitude Function -- Select Unit

Summary

COMMAND	NOTE
Convert dBm to volts	
Local: [AMPL] — [MHz|V] [kHz|mV] [Hz|uV]	1
Remote: "AP" — "V" "MV" "UV" "NV"	1

```
Convert volts to dBm

    Local:  [AMPL] -- [dB(m)]

    Remote: "AP"   -- "DB"
```

Example

Change the displayed amplitude of -10.0 dBm to its voltage equivalent.

```
Local:  [AMPL] [MHz|V]

Remote: "APV"
```

Note

1. Any voltage unit is accepted since the microprocessor automatically selects the units appropriate for the value being displayed.

Related Operations

Relative Function

2-25. Bright-Digit Edit Entry

The following information describes how to use a Bright-Digit Edit Entry to change an instrument parameter. The output frequency, amplitude and the modulation indices can be modified with this entry method.

The RF OUTPUT [ON/OFF] must be enabled for the Generator to produce an output. (See the reference material on RF OUTPUT [ON/OFF] Entry.)

Command Syntax

Select Display Field – Position Bright Digit – Change Bright-Digit Value

Summary

```
                                COMMAND                                NOTES
Edit Frequency

    Local:  [FREQ] -- EDIT [←]/[→] -- EDIT [↑]/[↓]                     1,2

    Remote: "FB"   -- float "GZ"    -- "KF" float                      3,4,5
                            "MZ"
                            "KZ"
                            "HZ"

Edit Amplitude

    Local:  [AMPL] -- EDIT [←]/[→] -- EDIT [↑]/[↓]                     1,2

    Remote: "AB"   -- float "DB"    -- "KA" float                      3,4,5
                            "V"
                            "MV"
                            "UV"
                            "NV"
```

```
Edit FM Deviation

    Local:  [FM]   — EDIT [←]/[→] — EDIT [↑]/[↓]      1,2

    Remote: "DB"   — float "GZ"    — "KD" float        3,4,5
                           "MZ"
                           "KZ"
                           "HZ"

Edit AM Depth

    Local:  [AM]   — EDIT [←]/[→] — EDIT [↑]/[↓]      1,2

    Remote: "PB"   — float "PC"    — "KP" float        3,4,5
```

Example 1

Edit the displayed amplitude of 9.7 dBm to 10.0 dBm.

```
Local:  Put the bright digit in the amplitude display by
        pressing [AMPL]. Select the least significant digit
        in that display by pressing EDIT [→] until the
        bright digit is on that digit. Increase the value of
        that digit by pressing EDIT [↑] three times.

Remote: "AB.1DB,KA3"
```

Example 2

Edit the displayed FM Deviation from 5.0 kHz to 3.0 kHz.

```
Local:  Put the bright digit in the FM display by pressing
        [FM]. Select the 1-kHz digit by pressing the EDIT [→]
        or EDIT [←] until the bright digit is on that digit.
        Decrease the value of that digit by pressing EDIT [↓]
        twice.

Remote: "DB1KZ,KD-2"
```

Notes

1. The bright-digit field remains selected until another display field is selected.
2. The bright-digit position is maintained for each of the four functions so that the bright digit can be moved from one display to another and back without losing its position in that previous display field.
3. float equals floating-point number.
4. In remote, the bright digit is positioned within a display field using a decade value and associated unit. Minus signs are ignored.
5. In remote, the bright digit is moved to the corresponding field and is increased or decreased by the signed integer following the "KF,KA,KD,KP" messages. The generic edit command "KB" may also be used to edit up or down the current bright-digit position. Positive integers do not require a sign.

Related Operations

Relative Function
Amplitude Fixed Range

2-26. Memory Entry

The following information describes how to use the memory function to store and recall front panel settings. The Generator has 50 memory locations that are retained for 2 years with the power off.

The sequence feature allows the operator to recall successive memory locations.

Command Syntax

Select Memory Function – Enter Memory Location

Summary

	COMMAND	NOTES
Store		
Local:	[STO] — [n] [n]	1,2,3
Remote:	"ST" — int	1,4
Recall		
Local:	[RCL] — [n] [n]	1,2,3
Remote:	"RC" — int	1,4
Sequence		
Local:	[SEQ]	5,6
Remote:	"SQ"	5

Example

Recall the Instrument Preset State as shown in Table 2-3 (located in memory location 98). Change the frequency parameter to 302 MHz, then store the new front panel setting in memory location 06.

```
Local:  [RCL] [9][8]   EDIT [↑] [↑]  [STO] [0][6]

Remote: "RC98,KF2,ST6"
```

Notes

1. The memory locations available for operator use are 01 through 50. Additionally, the following special memory locations are available:

   Memory location 00 contains a backup-memory location. After a recall (or sequence) operation it contains the last front panel setting. After a store operation, it contains the data in the stored memory location before the store operation. Thus, a recall operation can be reversed by recalling location 00.

   Memory location 98 contains the Instrument Preset State.

   Memory location 99 contains the present instrument state.

Table 2-3. Instrument Preset State

FUNCTION	SETTING
Frequency	300.00000 MHz
Frequency Step	1.00000 MHz
Amplitude	-10.0 dBm
Amplitude Step	1 dB
Modulation Rate	1000 Hz
AM Depth	30%
AM Depth Step	1 %
FM Deviation without/with Option -651	5.0/.5 kHz
FM Deviation Step without/with Option -651	100/10 Hz
Modulation Display	AM Depth
Bright-Digit Location	Frequency Bright Digit
Frequency Bright-Digit Position	1 MHz
Amplitude Bright-Digit Position	1 dBm
AM Bright-Digit Position	1 %
FM Bright-Digit Position without/with Option -651	10/1 Hz
Special Functions	20,30,70,80,90
INT AM	Off
EXT AM	Off
INT FM	Off
EXT FM	Off
Step Function	Frequency Step

2. In local control, two data digits must be entered to specify the memory location. The recall or store is performed when the second digit is released.

3. The last memory location specified (used for sequence operations) is displayed while the [STO] or [RCL] button is pressed.

4. int equals unsigned integer.

5. The sequence operation recalls the next higher memory location, starting from the last memory location stored or recalled. No memory location need to be specified. When the highest location is reached, the sequence starts over again at location 01.

6. While [SEQ] is pressed, the next memory location number is displayed and the memory location is recalled. This key is repeating.

2-27. Modulation Entry

The following information describes how to preset the modulation index (AM depth or FM deviation), internal modulation rate (400 or 1000 Hz), and how to select the modulation source (internal and/or external).

The FUNCTION-DATA-UNIT method of selecting the modulation index is summarized in the following command syntax. The indices may also be modified using Bright-Digit Edit or Step Entry. Since there is only one modulation display, the modulation index displayed is determined by the last modulation FUNCTION key pressed.

Command Syntax

Select Function -- Enter Data -- Select Unit

Summary

COMMAND	RANGE	RESOLUTION	NOTES
Set AM Depth			
Local: [AM] — DATA — [%]	0 to 99%	1%	1,2
Remote: "AM" — float — "PC"	0 to 99%	1%	1,3
Set FM Deviation			
Local: [FM] — DATA — [MHz|V] [kHz|mV] [Hz|uV]	0.1 to 99.9 kHz	3 digits	1,4
Remote: "FM" — float — "GZ" "MZ" "KZ" "HZ"	0.1 to 99.9 kHz	3 digits	1,3,4

Summary

COMMAND	NOTES
Select Modulation Rate	
Local: [400/1000]	5
Remote: "MR" "0" or "1"	6

Summary

COMMAND	NOTES
Enable or Disable Modulation	
Local: [INT AM] [INT FM] [EXT AM] [EXT FM]	7,8
Remote: "AI" "0" or "1" "FI" "0" or "1" "AE" "0" or "1" "FE" "0" or "1"	9

Example

Set the FM deviation to 5 kHz, the modulation rate to 400 Hz, and internally modulate the carrier.

Local: [FM] [5] [kHz] [INT FM] [400/1000]

Remote: "FM5KZ,MR0,FI1"

Notes

1. This operation does not change the Generator output unless the corresponding modulation is enabled.

2. Uncalibrated if peak amplitude exceeds +13 dBm or if AM depth exceeds 90% and AM is enabled.

3. float equals floating-point number.

4. Uncalibrated if FM is enabled and FM deviation is below 100 Hz or above (frequency -100 kHz)/3.

5. Toggles between 400 or 1000 Hz only. An indicator shows selected rate only if internal modulation is on.

6. "0" selects a modulation rate of 400 Hz; "1" selects 1000 Hz.

7. These are ON/OFF operations; any combination is allowed.

8. Two indicators 'EXT HI' and 'EXT LO' are lit when external modulation is on to indicate that the external modulation signal is 2% above or 2% below the nominal 1V peak input requirement.

9. "0" turns the modulation source off; "1" turns it on.

Related Operations

Bright-Digit Edit Entry
Step Entry

2-28. Relative Function

The following paragraphs describe how to change frequency and amplitude using the Relative mode. There are two steps:

1. Setting the reference

2. Changing the parameter relative to that reference

Setting the reference is done by setting the parameter to the desired value and then enabling the relative mode for that parameter. This causes the 'REL' indicator to light and the displayed value to be zero in the corresponding display. The Generator output does not change during these operations. In the relative mode, the usual means of changing the parameter may be used; i.e., FUNCTION-DATA-UNIT, Step, or Bright-Digit Edit Entry.

In the relative frequency mode, the actual frequency is the sum of the reference and the displayed frequency. The actual frequency may be displayed by pressing the [FREQ] key.

In the relative amplitude mode, the actual amplitude is the sum of the reference and the displayed amplitude when the reference and the displayed quantities have the same units. However, with mixed units (volts and dB), the actual amplitude is the voltage value scaled by the dB value. The actual amplitude may be displayed by pressing the [AMPL] key.

Command Syntax

Select Relative Function -- Enable or Disable

Summary

COMMAND	NOTE
Frequency	
Local: [SPCL] [2] — [0] or [1]	1
Remote: "SP" "2" — "0" or "1"	1
Amplitude	
Local: [SPCL] [3] — [0] or [1]	1
Remote: "SP" "3" — "0" or "1"	1

Example

Set the amplitude to –15 dBμV; i.e., 15 dB below 1 microvolt.

```
Local:  [AMPL] [1] [Hz|uV]  [SPCL] [3] [1] [AMPL] [-] [1] [5] [dB(m)]

Remote: "AP1UV,SP31,AP-15DB"
```

Note

1. 1 enables the relative function; 0 disables the relative function.

Related Operations

Amplitude and Frequency Entry
Bright-Digit Edit Entry
Step Entry

2-29. RF OUTPUT ON/OFF Entry

The following information describes how to enable the output of the Generator using the RF OUTPUT [ON/OFF] key and the corresponding remote code.

Command Syntax

RF Output On/Off

Summary

COMMAND	NOTE
RF Output On	
Local: RF OUTPUT [ON/OFF] when 'RF OFF' is on	1
Remote: "R01"	1
RF Output Off	
Local: RF OUTPUT [ON/OFF] when 'RF OFF' is off	
Remote: "R00"	

Notes

1. Turning the RF Output on resets the RPP circuitry if it has tripped.

2-30. Special Function Entry

The following information describes how to use the Special Function Entry to use the special operating functions of the Signal Generator. Table 2-4 lists the special functions available.

The special function code is a two-digit number. The first digit indicates the classification of the special function, and the second digit specifies the particular special function.

The special function is executed when the second special function code digit is entered. There are ten classes of special functions. The special functions in the 0(n) and 1(n) class cause an action to be performed. Classes 2(n) through 9(n) cause an instrument state to change. The status of classes 2(n) through 9(n) appears (left to right) in the frequency display field when the [SPCL] key is pressed.

Command Syntax

Select Special Function – Enter Special Function Code

	COMMAND	NOTE
Local:	[SPCL] — [n] [n]	
Remote:	"SP" — int	1

Example

Change the repeat rate of the EDIT and STEP keys to slow.

```
Local:  [SPCL] [7] [2]

Remote: "SP72"
```

Note

1. int equals unsigned integer.

Related Operations

Fixed Range
Relative Function

2-31. Status and Clear Entry

The Status entry allows you to interrogate the Generator for an explanation of either uncalibrated operation ('UNCAL'indicator is lit) or rejected entry operation (the 'REJ ENTRY' indicator is lit).

When either the 'UNCAL' or 'REJ ENTRY' indicator is lit, press and hold the [STATUS] key to display the Uncalibrated or Rejected Entry Error Code Message. These messages provide detailed information on the nature of the uncalibrated or rejected entry

condition. Table 2-5 contains a list and explanation of all the Uncalibrated Error Code Messages. Table 2-6 contains a list and explanation of all the Rejected Entry Error Code messages.

Table 2-5. UNCAL Error Codes

CODE	DESCRIPTION
000 000 000	= Indicates no UNCAL conditions
001 000 000	= FM deviation < 100 Hz (<10 Hz with Option -651)
002 000 000	= FM deviation > (freq -100 kHz)/3
*004 000 000	= Excess FM deviation, main or reference PLL unlocked
020 000 000	= AM depth > 90%
*000 010 000	= Main or reference PLL unlocked
000 000 001	= Level vernier below calibrated range or level < -127 dBm
000 000 002	= Peak (AM) amplitude > +13 dBm
*000 000 004	= Amplitude unleveled
*000 000 010	= Fixed-range level vernier at 0
*000 000 020	= Fixed-range level vernier at full scale
*000 000 040	= RPP tripped
000 000 100	= Level below -127 dBm
000 000 200	= Level correction disabled
*000 000 400	= RF output off

Table 2-6. REJect ENTRY Codes

CODE	DESCRIPTION
001 000 000	= FM deviation not between 0 and 99.9 kHz (9.99 kHz with Option -651)
002 000 000	= FM deviation Step not between 0 and 99.9 kHz (9.99 kHz with Option -651)
004 000 000	= AM depth not between 0 and 99%
010 000 000	= AM depth step not between 0 and 99%
020 000 000	= IEEE-488 command syntax error
040 000 000	= IEEE-488 input value out of range
100 000 000	= Special function requires IEEE option
200 000 000	= IEEE edit or step operation beyond allowed range
000 001 000	= Frequency not between 0.01 and 1050 MHz
000 004 000	= Frequency step not between 0 and 1050 MHz
000 040 000	= Invalid memory location
000 100 000	= Invalid data in memory
000 200 000	= Special function not allowed
000 000 001	= Output amplitude not between 10 nV and 2V
000 000 002	= Insufficient resolution for units conversion
000 000 004	= Units conversion to volts not allowed with reference in volts
000 000 010	= Units conversion to dB not allowed with reference in volts
000 000 020	= Amplitude step not between 0 and 166 dB or 0 and 1999V
000 000 040	= Units conversion on amplitude step not allowed
000 000 100	= Amplitude step and current amplitude display not in same units

The [CLR LCL] key may be used to clear a partial DATA entry or clear the flashing 'REJ ENTRY' indicator. Press the [STATUS] key while an 'UNCAL' indication exists to display the Uncal Error Codes in three fields:

Flashing codes (denoted by *) indicate abnormal operation or aberrated output. Non-flashing codes indicate operation outside specified range.

Press the [STATUS] key while the 'REJ ENTRY' indication exists to display the Reject Entry error codes:

2-32. Step Entry

The following information describes how to use the Step Entry function to change an instrument parameter. The RF OUTPUT [ON/OFF] must be enabled for the Generator to produce an output. (See the reference material on RF OUTPUT [ON/OFF] Entry.)

Command Syntax

Select Step Function – Enter Data – Select Units – Change Parameter

Summary

```
                COMMAND          RANGE            RESOLUTION      NOTES

Frequency

    Local:  [FREQ][STEP]--DATA --[MHz|V] --STEP [↑]/[↓]
                                 [kHz|mV]
                                 [Hz|uV]
                             0 to 1050 MHz   10 Hz

    Remote: "FS"         --float--"GZ"    --"FU"/"FD"
                                 "MZ"
                                 "KZ"
                                 "HZ"
                             0 to 1050 MHz   10 Hz            1,2

Amplitude

    Local: [AMPL][STEP]--DATA --[dB(m)]  -- STEP [↑]/[↓]
                                [MHz|V]
                                [kHz|mV]
                                [Hz|uv]
                             0 to 166 dB     0.1 dB
                             0 nV to 1999 V  3 digits

    Remote: "LS"         --float--"DB"     --"LU"/"LD"
                                "V"
                                "MV"
                                "UV"
                                "NV"
                             0 to 166 dB     0.1 dB          1,2
                             0 nV to 1999V   3 digits        1,2

FM deviation

    Local:  [FM][STEP]  --DATA --[MHz|V] -- STEP [↑]/[↓]
                                 [kHz|mV]
                                 [Hz|uV]
                             0 to 99.9kHz    3 digits         3
```

```
    Remote: "DS"        —float—"GZ"     —"DU"/"DD"
                                "MZ"
                                "KZ"
                                "HZ"
                          0 to 99.9kHz    3 digits          1,2,3
AM depth

    Local:  [AM][STEP]  —DATA —[%]      — STEP [↑]/[↓]
                          0 to 99%        1%

    Remote: "PS"        —float—"PC"     —"PU"/"PD"
                          0 to 99%        1%                1,2
```

Example

Recall the Instrument Preset State: [RCL] [9] [8]. Step the displayed frequency of 300 MHz, in 10-MHz steps, to 270 MHz.

```
Local:  [FREQ]   [STEP]   [1] [0] [MHz|V]   [↓] [↓] [↓]STEP

Remote: "FS10MZ,FD,FD,FD"
```

Notes

1. float equals floating-point number.

2. Entering the step size from IEEE-488 does not select the step function. For example, "FS10MZ" does not select the step function; "FD" or "FU" must be used to select the frequency step function. The generic step up/down commands "SU" and "SD" may be used to step the current step function.

Related Operations

Relative Function

2-33. REMOTE OPERATION (IEEE-488 INTERFACE)

The following paragraphs describe how to operate the Generator using the IEEE-488 Interface. The IEEE-488 Interface allows you to program the Generator and operate instrument functions via the IEEE-488 bus (with the exception of the front panel POWER switch and the rear panel REF INT/EXT switch). The IEEE-488 Interface also provides additional programming features not accessible from the front panel.

The rest of this section is divided into two parts: the first part describes how to set up the Generator for operation on the IEEE-488 bus and gives some typical programming examples. The first part also includes a complete list of the programming commands recognized by the Generator software.

The second part describes the implementation of the IEEE-488 interface and programming features that are accessible only from the IEEE-488 Interface. The second

part includes typical timing data, provided as an aid to system programmers. This information can assist in writing programs that have greater speed and efficiency.

The Generator can be used with any IEEE-488 controller in the normal addressed mode. The following two additional modes are available for operation without a controller:

Listen-only mode
Talk-only mode

In the listen-only mode, the Generator responds to all data messages on the IEEE-488 bus. In the talk-only mode, the Generator sends commands on the IEEE-488 bus to program another 6061A or 6060B Generator (or a 607xA with some restrictions).

2-34. Setting Up the IEEE-488 Interface

Figure 2-5 shows a 6061A Signal Generator connected to a 1722A via the IEEE-488 bus.

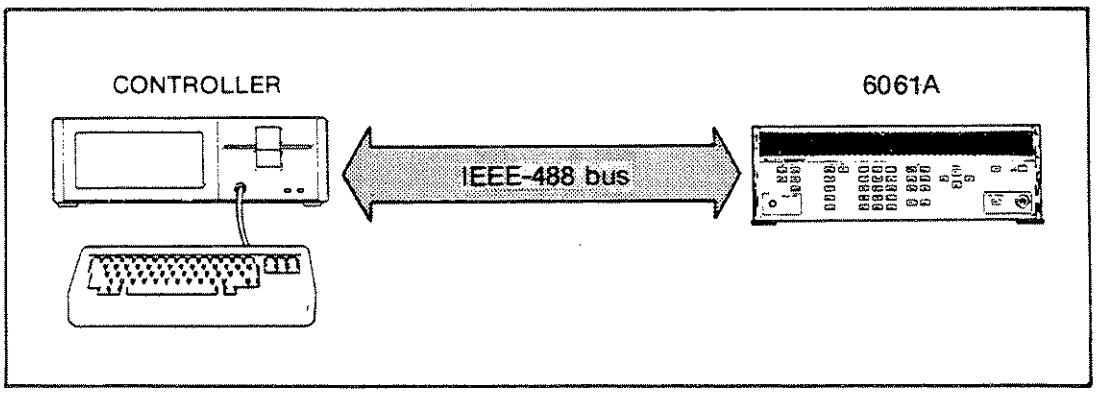

Figure 2-5. 6061A Signal Generator Connected to a 1722A

Use the following procedure to set up the Generator with the IEEE-488 Interface:

1. Connect a standard IEEE-488 cable between the Generator and the IEEE-488 device.

NOTE

The IEEE-488 Interface signal SHIELD (pin 12) can be disconnected (when using an IEEE-488 cable with a metallic hood) from instrument ground. To do this, use the left most address switch (as viewed from the rear panel).

2. Select the IEEE-488 address and mode as follows:

   a. For control of the Generator with a controller, set both the LISTEN ONLY and TALK ONLY switches to 0 (down). Set switches a1 through a5 to the desired address 0 through 30. For example, for an address of 1, set switches a2, a3 a4, and a5 to 0 (down), and set switch a1 to 1 (up).

   b. For talk-only operation, set the TALK ONLY switch to 1 (up).

   c. For listen-only operation, set the LISTEN ONLY switch to 1 (up) and the TALK ONLY switch to 0 (down).

3. Verify the address and mode:

a. Press the [SPCL] and the [1][0] keys. Verify that the selected address appears in decimal in the Frequency display field.

b. If the talk-only mode or listen-only mode has been selected, "to" or "lo" appears to the left of the address in the Frequency display field.

NOTE

The address switches are continuously monitored except when in remote. The TALK ONLY and LISTEN ONLY switches are only read when the Generator is powered on.

2-35. Programming Commands

After the address and mode have been set, the Generator can be programmed by an IEEE-488 controller or from another Generator. Tables 2-7 and 2-8 and the programming examples following them provide the basic information on how to program the Generator.

More details about the commands can be found in two places. Commands that are available from the front panel are described in the first part of this section. Those commands that are only available from the IEEE-488 Interface are described in the Commands Descriptions paragraphs later in this section of the manual.

Table 2-7 is an index for the IEEE-488 Commands used in Table 2-8. This index is a list of the command headers according to function. Table 2-8 lists all the remote commands that are recognized by the Generator. The commands are listed alphabetically by function.

2-36. Programming Examples

The following three examples show how to use the IEEE-488 bus and use a variety of controllers to program the Generator. In the first example, a Fluke 1722A Controller is used to program the Generator. In the second example, two Generators are configured to track each other in frequency. In the third example, a 1722A is used to program the Generator with the frequency step up controlled by the trigger command.

Table 2-7. Index of IEEE-488 Commands

FUNCTION	COMMAND HEADERS
Amplitude Entry	AP, SP3x, RA, SP8x, SP9x
Binary Learn Commands	LI, LM
Clear Commands	CB, CE, CL
Edit Entry	AB, DB, FB, PB, KB, KA, KD, KF, KP
Frequency Entry	FR, SP2x, RF
Interface Mode Commands	EM, RM, TM, VM, UM, @
Interrogate Commands	ID, IE, II, IO, IR, IT, IU, IV
Memory Entry	RC, ST, SQ
Modulation Entry	AM, AE, AI, FM, FE, FI, MR, MF
Monitor Commands	IB, OB, OD, RB, RW, DW, WB, WW, XA, XB, XD, XR
RF ON/OFF Entry	RO
Special Function Entry	SP
SRQ Commands	IM, SM, XF
Step Entry	FS, LS, PS, DS, SU, SD, FU, FD, LU, LD, PU, PD, DU, DD
Trigger Commands	CT, TR

Table 2-8. IEEE-488 Commands

COMMAND USE	COMMAND HEADER	COMMAND NUMERIC	COMMAND SUFFIX	COMMENTS
AMPLITUDE ENTRY				
Program Amplitude	AP	float	V MV UV NV DB	Program displayed amplitude in units of: volts millivolts microvolts nanovolts dB or dBm
Convert Amplitude Units	AP	none	V MV UV NV DB	Change amplitude units to: volts volts volts volts dB or dBm
Relative Amplitude	SP	30/31	none	Disable/enable relative amplitude operation
Relative Amplitude	RA	0/1		Alternate programming command for disable/enable relative amplitude operation.
Level Correction	SP	80 81 82	none	Enable all level correction. Disable all level correction. Disable attenuator correction.
Amplitude Fixed Range	SP	90/91	none	Disable/enable amplitude fixed-range operation.
BINARY LEARN COMMANDS				
Store a Front Panel Setup	LI	int	string	The Generator stores the string into the memory location specified by int. See the Command Descriptions paragraph for decoding the learn string.
Send a Front Panel Setup	LM	int	none	The Generator responds with the contents of the memory location specified by int. See the Command Descriptions paragraph for decoding the learn string.
CLEAR COMMANDS				
Clear IEEE-488 Output Buffer	CB	none	none	Clears IEEE-488 output buffer.
Clear error	CE	none	none	Clears the IEEE-488 rejected entry status.
Device Clear	CL	none	none	Clears the instrument state.
EDIT ENTRY				
Position Amplitude	AB	float	V MV	Position the bright digit in the AMPLITUDE display with

Table 2-8. IEEE-488 Commands (cont)

Bright Digit			UV NV DB	the stated resolution. For example, enter "AB10MV" for 10-mV resolution.
Position FM Bright Digit	DB	float	GZ MZ KZ HZ	Position the bright digit in the FM display with the stated resolution. For example, enter "DB1KZ" for 1-kHz resolution.
Position Frequency Bright Digit	FB	float	GZ MZ KZ HZ	Position the bright digit in the FREQUENCY display with the stated resolution. For example, enter "FB1MZ" for 1-MHz resolution.
Position AM Bright Digit	PB	float	PC	Position the bright digit in the AM display with the stated resolution. For example, enter "PB1PC" for 1% resolution.
Edit	KB	float	none	Edit the current bright digit by float counts.
Edit Amplitude	KA	float	none	Move the bright digit to the AMPLITUDE display and edit amplitude by float counts.
Edit FM	KD	float	none	Move the bright digit to the FM display and edit FM by float counts.
Edit Frequency	KF	float	none	Move the bright digit to the FREQUENCY display and edit frequency by float counts.
Edit AM	KP	float	none	Move the bright digit to the AM display and edit AM by float counts.
FREQUENCY ENTRY				
Frequency Programming	FR	float	 GZ MZ KZ HZ	Program displayed frequency in units of: gigahertz megahertz kilohertz hertz
Relative Frequency	SP	20/21	none	Disable/enable relative frequency operation.
Relative Frequency	RF	0/1	none	Alternate programming command for disable/enable relative frequency operation.
INTERFACE MODE COMMANDS				
Error Mode	EM	0/1	none	Disable/enable the clear error mode. If disabled, the IEEE-488 error status is cleared only when interrogated. If enabled, the error status is cleared when a new message is processed.

Table 2-8. IEEE-488 Commands (cont)

Record Mode	RM	0/1	none	Disable/enable the record mode. If disabled, the message unit is a command. If enabled, a message unit is a record. The message unit is the smallest group of characters that the Generator processes.
Record Terminator Mode	TM	0/1	none	Selects the LF/CR character as the record terminator. The record terminator is used on input in the record mode and is sent following all output.
Output Valid Mode	VM	0/1	none	Disable/enable the output valid mode. In the output valid mode, the Generator waits to process commands until the RF output has become valid.
Unbuffered Mode	UM	0/1	none	Disable/enable the unbuffered mode. If disabled, all input is buffered. If enabled, only one message unit is buffered.
"@" Modes	@	int	none	The "@" command may be used as an alternate method of programming interface modes.
INTERROGATE COMMANDS				
Instrument Identification	ID		none	The Generator responds with its model number ("6060B").
Elapsed Time Indicator	IE	none	none	The Generator responds with the total operating time since the Generator was manufactured.
Interface Modes	II	none	none	Interrogate the interface modes selected. The Generator responds with an unsigned integer.
Option Loading	IO	none	none	Interrogate the option loading. The Generator responds with the message: d1, d2, d3 d1 is the instrument code. d2 is the digital and synthesizer options. d3 is the output options. See the Interrogate Commands paragraphs for details.
Rejected Entry	IR	none	none	Interrogates the rejected entry error codes. The Generator responds with three octal fields: "AAAAA,BBBBB,CCCCC". See Table 2-6 for a list of rejected entry error codes.
Self Test	IT	none		Interrogates the results of the self tests. The Generator responds with the self-test results. See paragraph 4D-20 for self-test codes.

Table 2-8. IEEE-488 Commands (cont)

UNCAL	IU	none	none	Interrogates the uncalibrated output error codes. The Generator responds with three octal fields: "AAAAA,BBBBB,CCCCC". See Table 2-5 for a list of uncal error codes.
Software Version	IV	none	none	Interrogate the software version. The Generator responds with the status message: "Vxx.x" where x's are decimal digits representing the current software revision level.
MEMORY ENTRY				
Recall	RC	int	none	Recall the front panel setup stored at the memory location specified by int.
Store	ST	int	none	Store the current front panel setup at the memory location specified by int.
Sequence	SQ	none	none	Sequence (recall) to the next higher memory location.
MODULATION ENTRY				
Program AM	AM	float	PC	Program AM depth in percent.
External AM	AE	0/1	none	Disable/enable external AM modulation.
Internal AM	AI	0/1	none	Disable/enable internal AM modulation.
Program FM	FM	float	 GZ MZ KZ HZ	Program FM deviation in units of: gigahertz megahertz kilohertz hertz
External FM	FE	0/1	none	Disable/enable external FM modulation.
Internal FM	FI	0/1	none	Disable/enable internal FM modulation.
Program Mod Freq	MR	0/1	none	Program modulation frequency to 400 Hz/1000 Hz.
Program Mod Freq	MF	float	 GZ MZ KZ HZ	Program modulation frequency in units of: gigahertz megahertz kilohertz hertz
MONITOR COMMANDS				
Input Bit	IB	none	BIT Desig-nator	Respond with the value of the designated hardware bit.
Output Bit	OB	0/1	BIT Desig-nator	Set the designated hardware bit to 0 or 1.

Table 2-8. IEEE-488 Commands (cont)

Output Dac	OD	int	DAC Desig-nator	Set the value of the desig-nated hardware DAC to the value specified by int.
Read Byte	RB	int	none	Read the value of the addressed byte. The Generator responds with an unsigned integer.
Read Word	RW	int	none	Read the value of the addressed word. The Generator responds with an unsigned integer.
Define Write Address	DW	int	none	Defines the address to be used by the write byte/word commands.
Write Byte	WB	int	none	Write int into the address specified with the define write address command.
Write Word	WW	int	none	Write int into the address specified with the define write address command.
Read Attenuation	XA	none	none	Read the current attenua-tion. The Generator responds with an unsigned integer.
Write Attenuation	XB	none	none	Change attenuation to 6dB times the unsigned integer. The integer can be 0 to 23.
Set Frequency Direct	XD	float	GZ MZ KZ HZ	Set the frequency hardware directly to the specified synthesizer frequency.
RF Output	XR	0/1	none	"XR0" programs all attenuation. "XR1" restores attenuation to its previous state.
RF ON/OFF ENTRY				
RF Output	RO	0/1	none	Turn RF output off/on.
SPECIAL FUNCTION ENTRY				
Special Functions	SP	00 02 03 04 07/08 09 10 11 12/13 14 15 20/21 30/31 70 71 72 80 81 82 83-86 90/91		Clears all special functions Initiates self test Display check Key check Set/reset SRQ Display S/W rev and instr ID Display IEEE-488 address Display self-test results Turn on/off display Initialize memory Latch test Disable/enable relative freq Disable/enable relative ampl Medium key repeat rate Fast key repeat rate Slow key repeat rate Enable all level correction Disable all level correction Disable attenuator correction Program alternate 24dB attens Disable/enable ampl fixed ring

Table 2-8. IEEE-488 Commands (cont)

SRQ COMMANDS				
Interrogate SRQ Mask	IM	none	none	Interrogate the SRQ mask. The Generator responds with the decimal value of the SRQ mask.
Set SRQ	SM	int	none	The SRQ mask is set to int.
Local Operation Alert Mode	XF	0/1	none	Disable/enable a mode to set SRQ each time a local entry is made. This SRQ is enabled by setting the front panel bit in the SRQ mask.
STEP ENTRY				
Program FREQ STEP Size	FS	float	GZ MZ KZ HZ	Program frequency step size in units of: gigahertz megahertz kilohertz hertz
Program AMPL STEP Size	LS	float	V MV UV NV DB	Program amplitude step size in units of: volts millivolts microvolts nanovolts dB or dBm
Program AM STEP Size	PS	float	PC	Program AM step size in percent.
Program FM STEP Size	DS	float	GZ MZ KZ HZ	Program FM step size in units of: gigahertz megahertz kilohertz hertz
Step Up/Down	SU/SD	none	none	Step the currently selected step function up/down one step.
Step Up/Down Frequency	FU/FD	none	none	Change the current step function to frequency and step frequency up/down one step.
Step Up/Down Amplitude	LU/LD	none	none	Change the current step function to amplitude and step amplitude up/down one step.
Step Up/Down AM	PU/PD	none	none	Change the current step function to AM and step AM up/down one step.
Step Up/Down FM	DU/DD	none	none	Change the current step function to FM and step FM up/down one step.
TRIGGER COMMANDS				
Configure Trigger	CT	string	none	Configures the trigger. Each time a trigger command or a group execute trigger interface message is received, the Generator executes the string of commands. The string record must end with a record terminator.

Table 2-8. IEEE-488 Commands (cont)

Trigger	TR	none	none	Trigger command. Equivalent to the group execute interface message. Upon processing the trigger command, the Generator executes the string, which has been preprogrammed with the configure trigger command.
SERVICE COMMANDS				
Interrogate Attenuator Counts	IA	none	none	The Generator responds with seven counts. Each count indicates the total number of actuations for one of the seven attenuator sections in the Generator.
Interrogate Error Log	IL	none	none	The Generator responds with ten error log entries. Each entry is an uncal error code or a self test result and the elapsed time of when the error was logged.
Keyboard Test	KT	none	none	The Generator responds with the code for each of the front panel keys pressed (see Table 4D-9.)

2-37. PROGRAMMING EXAMPLE 1

Use the following procedure to program the Generator with a Fluke 1722A Instrument Controller to this state:

Frequency	210 MHz
Amplitude	6 dBm
Modulation Freq.	1000 Hz
FM	5 kHz
Internal FM	ON
AM	15%
External AM	ON

1. Connect the Generator to the Controller with an IEEE-488 cable.
2. Set the address switch of the Generator as follows (as viewed from the rear of the instrument):

   00000010

3. Enter the following program into the Controller:

```
1   ! Fluke 1722A BASIC program to control a 6061A.
2   ! The Address of the 6061A is 2.
3   A% = 2%
10  ! Clear the 6061A so that it is in a known state.
15  INIT PORT 0
20  REMOTE @A% \ CLEAR @A%
100 ! SET THE 6061A.
110 PRINT @A%, "FR210MZ,AP6DB,MR1,FM5KZ,FI1,AM15PC,AE1"
999 END
```

4. Run the program by typing on the Controller "RUN ⟨RETURN⟩".

2-38. PROGRAMMING EXAMPLE 2

The 6061A Signal Generator can be connected to an other 6061A Signal Generator in a master-slave configuration. In the following example, two Generators are configured to track each other in frequency. This configuration may be used to track frequency, amplitude, AM, or FM.

1. Connect two 6061A Signal Generators together with an IEEE-488 cable.

2. Set the rear panel address switch of the first Generator (talker) as follows:

   00100000

3. Set the rear panel address switch of the second Generator (listener) as follows:

   01000000

4. Manually program the talker Generator as follows:

FUNCTION	VALUE	KEY SEQUENCE
Frequency	210 MHz	[FREQ] [2] [1] [0] [MHz|V]
Step Function	Frequency	[FREQ] [STEP]
Frequency Step	1.25 kHz	[1] [.] [2] [5] [kHz|mV]

5. Manually program the listener Generator as follows:

FUNCTION	VALUE	KEY SEQUENCE
Frequency	195 MHz	[FREQ] [1] [9] [5] [MHz|V]
Step Function	Frequency	[FREQ] [STEP]
Frequency Step	1.25 kHz	[1] [.] [2] [5] [kHz|mV]

6. On the talker Generator, press the [▲] STEP or [▼] STEP keys. Each time the key is pressed, the frequency of both Generators increases or decreases by 1.25 kHz (the Frequency Step) at frequencies 15 MHz apart.

Different functions on each Generator can be programmed to track in the master-slave configuration. In other words, while the master Generator can be programmed to step increase 25 kHz FM, the Slave Generator can be programmed to step 25% AM.

NOTE

To use the step function feature for other functions, change the step function on the Generators to the desired functions.

2-39. PROGRAMMING EXAMPLE 3

In the following example, the Generator is programmed by a Fluke 1722A Controller (via the IEEE-488 bus) to the same state as in Programming Example 1. Additionally, the frequency step size is set to 1.25 kHz, and the trigger buffer is programmed to execute the step up command when the trigger command is received. The SRQ mask of the Generator is set to generate an SRQ when the RF output has settled and the Generator is ready for more input from the bus.

The program then enters a loop where it waits for the ready SRQ, sends the GET (group execute trigger) interface message to step up the frequency, and waits again. At this time you should do the following:

1. Connect the Generator to the Controller with an IEEE-488 cable.

2. Set the rear panel address switch of the Generator as follows:

   00000111

3. Enter the following program into the Controller:

```
 1  ! Fluke 1722A BASIC program to control a 6061A.
 2  ! The Address of the 6061A is 2.
 3  A% = 2%
10  ! Clear the 6061A so that it is in a known state.
15  INIT PORT 0
20  REMOTE @A% \ CLEAR @A%
100 ! SET THE 6061A.
110 PRINT @A%, "FR21OMZ.AP6DB.MR1.FM5KZ.FI1.AM15PC.AE1"
120 ! Set the frequency step, output valid mode,
121 ! and configure the trigger buffer.
130 PRINT @A%, "FS1.25KZ.VM1.CTSU"
140 ! Set the SRQ mask to enable "output valid" SRQ
150 PRINT @A%, "SM16"
160 ! Wait for above commands to finish processing
170 WAIT 1000 \ S% = SPL (A%)
180 ! Trigger the first step up
190 TRIG @A%
300 ! Wait for SRQ
310 ON SRQ GOTO 800
320 WAIT FOR SRQ
800 OFF SRQ
810 ! Check the serial poll response
820 S% = SPL(A%)
830 IF (S% AND 64%+16%) <> 80% THEN PRINT s%;" Bad Serial Poll Response"
840 ! Trigger the next step up
850 TRIG @A%
860 ! Resume operation-- waiting for next SRQ
870 RESUME 300
999 END
```

4. Run the program by typing on the Controller "RUN ⟨RETURN⟩".

2-40. Interface Functions

The Generator implements a subset of interface functions defined by the IEEE Standard 488-1978. Table 2-9 summarizes the interface functions implemented. This section describes the operation of the Generator in response to interface messages associated with each interface function.

Table 2-9. IEEE-488 Interface Functions List

FUNCTION	DESCRIPTION
SH1	Complete source handshake capability
AH1	Complete acceptor handshake capability
T5	Basic talker, Talk only, Serial poll, Unaddressed if MLA
TE0	No extended talker capability
L3	Basic listener, Listen only, Unaddressed if MTA
LE0	No extended listener capability
SR1	Complete service request capability
RL1	Complete remote/local capability
PP0	No parallel poll capability
DC1	Complete device clear capability
DT1	Complete device trigger capability
C0	No controller capability
E1	Open-collector drivers

2-41. Address Mode

In the address mode, the Generator may be operated from local (using the Front Panel keys) or from remote (using the IEEE-488 Interface). The following paragraphs describe the operation of the Generator in both states and transitions between the states.

The available IEEE-488 messages and their descriptions for the address mode of operation are presented in Table 2-10.

2-42. LOCAL OPERATION

The Generator powers up in the local mode. When in local mode, the following conditions are present:

The front panel indicator REM, is not lit.

Table 2-10. IEEE-488 Address Mode Message Descriptions

MESSAGE	DESCRIPTION
pon Power-On	
Talker Operation	When powered up, the Generator generates a Power-On message (pon) and clears its output buffer. The Generator is not addressed to talk when powered up.
Listener Operation	The Generator is not addressed to listen when the power is turned on.
Service Request Operation	The state of the Service Request (SRQ) signal on pon is determined by the SRQ mask. Because of the non-volatile memory, the SRQ mask is the same as when the power was removed. Therefore, if the SRQ mask enables the power on, output valid, or ready SRQs, the SRQ signal will be true during pon.
MTA My Talk Address	
Talker Operation	The Generator is addressed to talk upon receipt of the MTA message. The front panel 'ADDR' indicator is lit while the Generator is addressed to talk.
Listener Operation	The Generator unlistens when the MTA message is received.
MLA My Listen Address	
Talker Operation	The Generator untalks when the MLA message is received.
Listener Operation	The Generator is addressed to listen when the MLA message is received. The front panel 'ADDR' indicator of the Generator is lit while the Generator is addressed to listen.
Data	
Talker Operation	The Generator sends data to the IEEE-488 bus only when requested by a programming data message. Message formats are described in the Command Description paragraphs. An End of Record (EOR) character is sent with EOI asserted following all outputs. The EOR character is either a carriage return or a line feed, depending on the setting of the terminator mode. The parity bit is always zero. Multiple output requests are buffered until the buffer is full. Processing of programming data messages is stopped until the buffer is no longer full. The buffer can be cleared with the Clear Buffer command ("CB"). The buffer is also cleared on power up (pon), with a Clear Command ("CL"), or with a Device Clear interface message (DCL or SDC).
Listener Operation	Command syntax, error processing, and input buffer overflow are described in the paragraphs on Command Processing. Refer to Table 2-8 for a list of IEEE-488 commands that are recognized by the Generator.

Table 2-10. IEEE-488 Address Mode Message Descriptions (cont)

MESSAGE	DESCRIPTION
IFC Interface Clear	
Talker Operation	The Generator untalks and unlistens when the IFC message is received.
Listener Operation	The Generator unlistens and untalks when the IFC message is received.
OTA Other Talk Address	
Talker Operation	The Generator untalks when the OTA message is received.
SPE Serial Poll Enable	
Talker Operation	After receiving the SPE message, the Generator responds with the serial poll status byte, if addressed to talk.
SPD Serial Poll Disable	
Talker Operation	After receiving the SPD message, the Generator resumes normal talk operation.
ULA Unlisten Address	
Listener Operation	The Generator unlistens when the ULA message is received.
RSV Request Service	
Service Operation	The front panel SRQ indicator is lit when the rsv message is sent. The Generator may request service for several reasons. Each reason for service request can be individually masked with the set mask command ("SM"). The service request mask can be interrogated with the interrogate mask command ("IM").
DCL Device Clear	
Clear Operation	The DCL message is ignored when in local. When the DCL message is received (during remote operation) the Generator is cleared. Any characters in the input buffer are cleared followed by the same operation as the clear command ("CL"). The operation of the DCL message is identical to the operation of the selected device clear (SDC) message. The cleared state of the Generator is described in the paragraphs on Power-On Conditions.
SDC Selected Device Clear	
Clear Operation	The SDC message is ignored during local operation. When the SDC message is received (during remote operation), the Generator is cleared. Any characters in the input buffer are cleared followed by the same operation as the clear command ("CL"). The operation of the SDC message is identical to the operation of the device clear (DCL) message. The cleared state of the Generator is described in the paragraphs on Power-On Conditions.

Table 2-10. IEEE-488 Address Mode Message Descriptions (cont)

MESSAGE	DESCRIPTION
GET Group Execute Trigger	
Trigger Operation	The GET message is ignored during local operation. When the GET message is received (during remote operation), the Generator executes a command string that has been preprogrammed with the Configure Trigger command ("CT"). The operation of the GET message is identical to the operation of the Trigger ("TR") command.
Undefined IEEE-488 Commands	All undefined IEEE-488 commands are acknowledged by the Generator handshake sequence, but no action is taken.

Device trigger (GET), device clear (DCL), and selected device clear (SDC) interface messages are ignored.

All device dependent messages are ignored.

If the data output was requested while the Generator was in the remote mode, the data output of a talker may be sent.

2-43. GOING FROM LOCAL TO REMOTE

The Generator switches from local to remote when the "my listen address message" (MLA) is received, and the Remote Enable (REN) signal is true.

2-44. REMOTE OPERATION

When in the remote mode, the following conditions are present:

The front panel REM indicator is lit.

Device trigger (GET), device clear (DCL), and selected device clear (SDC) interface messages are processed.

All device-dependent messages are processed during the remote mode.

2-45. GOING FROM REMOTE TO LOCAL

The Generator switches from remote to local mode in one of the following ways: The IEEE-488 Go To Local (GTL) message is received, the remote enable signal REN is false, or a Return To Local (rtl) message is generated by pressing the front panel [CLR/LCL] key (if the Generator is not in the local lockout mode).

The Generator enters the local lockout mode when the Local Lockout message (LLO) is received. The Generator exits the local lockout mode to the local mode when REN is false.

When switching from remote to local, unprocessed commands in the input buffer are processed until the input buffer is cleared or a front panel entry is made. Switching to local has no effect on the contents of the output buffer.

2-46. Talk-Only Mode

Figure 2-6 shows two 6061A connected together with the IEEE-488 Bus.

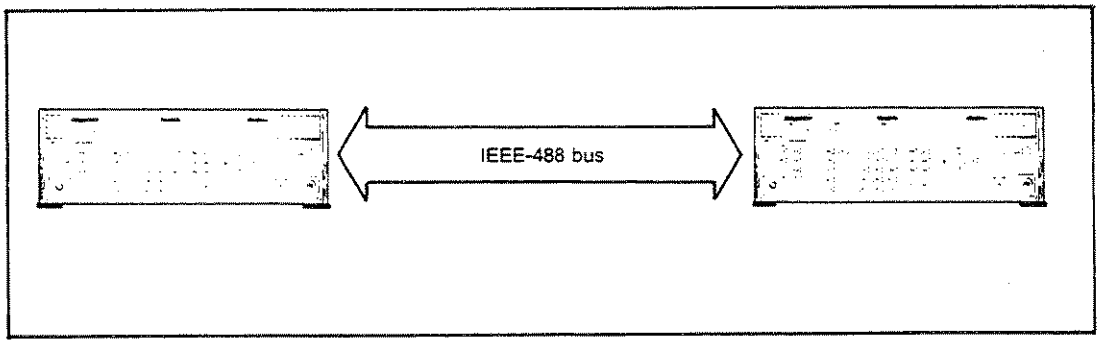

Figure 2-6. 6061A IEEE-488 Bus Connected to a 6061A IEEE-488 Bus

To select the talk-only mode, set the TALK ONLY address switch to 1 (up). If the talk-only address switch and the listen-only address switch are set to 1, the talk-only mode is selected.

In the talk-only mode, the listener, remote/local, service request, device clear, and device trigger interface functions do not apply.

If the talk-only mode is selected, the Generator is always addressed to talk and the front panel ADDR indicator is always lit. The Step Up ("SU") or Step Down ("SD") message is sent when the [↑] STEP or [↓] STEP front panel keys are pressed. This output is not buffered and if no listener is connected to the IEEE-488 Interface, no output will be sent. A carriage return followed by line feed (with the EOI signal true) are always sent as the end of record.

2-47. Listen-Only Mode

To select the listen-only mode, set the LISTEN ONLY address switch to 1 (up). If the talk-only address switch and the listen-only address switch are set to 1, the talk-only mode is selected.

If the listen-only mode is selected, the Generator is always addressed to listen, and the front panel ADDR indicator is always lit. The Generator listens and responds to all data messages on the IEEE-488 Interface. The response to data messages is the same as in the addressed mode of operation except that requests for talker output are ignored.

In the listen-only mode, the talker, remote/local, service request, device clear, and device trigger interface functions do not apply.

2-48. Command Syntax

The Generator IEEE-488 bus commands alphabet consists of the letters A through Z (upper and lower case letters are treated equally), digits 0 through 9, and the following special characters:

@ . , ; + - CR LF

Spaces, tabs characters, and the parity bit are ignored.

The IEEE-488 commands for the Generator consist of the following three parts:

Header
Numeric
Suffix

The header is always required, but the numeric and suffix may be optional. This rule gives the following four possible combinations:

⟨HEADER⟩
⟨HEADER⟩ ⟨NUMERIC⟩
⟨HEADER⟩ ⟨NUMERIC⟩ SUFFIX⟩
⟨HEADER⟩ ⟨SUFFIX⟩

Multiple commands may be separated with one of the end of string (EOS) characters ";" or ",". Use of EOS characters facilitates recovery in the event of a syntax error and will also enhance readability.

2-49. COMMAND HEADER SYNTAX

The command header is a two alpha-character string. A list of the IEEE-488 command headers used on the Generator is presented in Table 2-8. The header determines the syntax of the numeric and suffix as listed in the table.

2-50. NUMERIC DATA SYNTAX

There are four types of numeric data: Boolean, unsigned integer, floating point, and trigger string. The following paragraphs describes each of the four numeric data formats. A syntax diagram is included for each format.

1. Boolean

   Boolean numeric data must be either a "0" or a "1". All other characters will result in a syntax error.

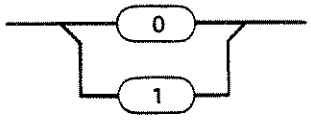

2. Unsigned Integer

   Unsigned integers may be specified in decimal or in hexadecimal. Any number of decimal digits are accepted. However, values greater than 65,535 are rejected. Hexadecimal numbers are preceded by an "X". Only 4 hexadecimal digits are accepted. Specifying a number in hexadecimal for the read word and read byte commands causes the response to be sent in hexadecimal. Decimal digits may be the numerals 0 through 9. Hexedecimal digits may be the hexadecimal digits 0 through F.

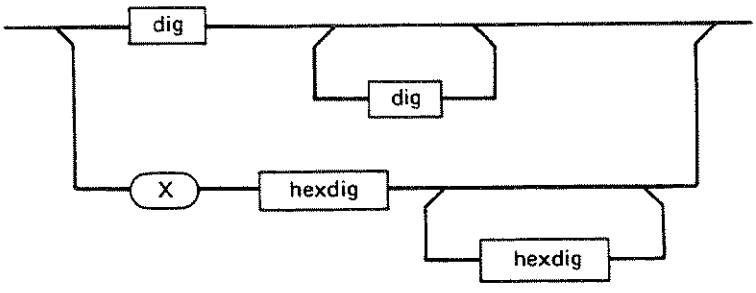

3. Floating Point

The floating-point numeric data format is the most flexible format. Digits may be the numerals 0 through 9. Any number of digits are accepted for both the number and the exponent. However, numbers greater than 2,147,483,629 are truncated, and exponents greater than 32,749 are rejected.

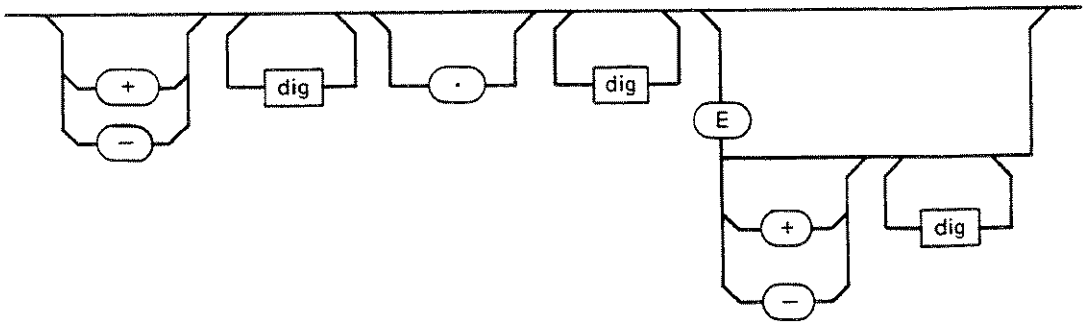

4. Trigger String

The trigger string numeric data is a string of Generator commands terminated with an EOR. The string may be up to 71 characters not including the EOR. Commands in the string are not checked for validity until the trigger string is executed with the trigger command.

EOR is the end of record character. This character is selectable with the terminator mode command. "TM0" selects the linefeed character. "TM1" selects the carriage return character. The IEEE-488 interface signal EOI asserted with any other character is also considered an end of record.

EOS is an end of string character, use either ";" or ",".

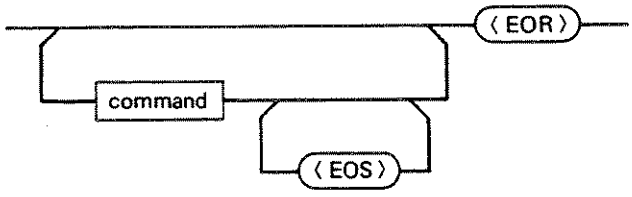

2-51. SUFFIX SYNTAX

Suffixes are always one or two alpha-characters. Certain suffixes are used to scale the numeric (the same as the front panel UNITS keys). Other suffixes mnemonically designate hardware components. The five types of suffixes are described in Table 2-11.

2-52. Command Descriptions

The following paragraphs describe the remote IEEE-488 Interface operating commands that are not accessible from the front panel of the Generator. IEEE-488 Interface commands that are accessible from the front panel of the Generator are described earlier in this section.

Table 2-11. Suffix Types

SUFFIX TYPE	SUFFIX	MNEMONIC	EQUIVALENT EXPONENT
Frequency and FM	GZ	gigahertz	9
	MZ	megahertz	6
	KZ	kilohertz	3
	HZ	hertz	0
Amplitude	V	volts	0
	MV	millivolts	-3
	UV	microvolts	-6
	NV	nanovolts	-9
	DB	dBm or dB	0
AM	PC	percent	0
DAC/BIT Designators	DAC and BIT designators are two alpha-character mnemonics that refer to hardware DACs and bits. Refer to the paragraphs on Monitor Commands for a complete list of designators.		
Learn Suffix	A learn suffix is a string of ASCII characters that contain coded memory location contents. Refer to the paragraphs on Binary Learn Commands for decoding of the learn string.		

2-53. BINARY LEARN COMMANDS

Front panel setups are stored in the memory of the Generator in a packed binary format. The binary learn commands are used to transfer this binary data between an IEEE-488 controller and the Generator. These commands allow you to minimize the amount of programming commands needed to program the entire instrument state. The binary learn commands are:

"LM" Learn Memory
"LI" Learn Interface

The syntax for the Learn Memory ("LM") command is as follows:

"LM" Memory Location Code

The Generator responds to the "LM" command with a string of 64 ASCII characters followed by an ⟨EOR⟩ (end of record character). This string represents the front panel settings (in a packed binary format) that were stored in the memory location specified.

NOTE

The ⟨EOR⟩, end of record character, is sent with EOI asserted. "TM0" selects the linefeed character, and "TM1" selects the carriage return character.

Example

IEEE-488 Command: "LM98"

Response:

"BOABAAAAPPJMAAAKAAAAAAAABBOBKKAAAAAPECEAA
BPEAAABDAEEBBAGBLKKMPAC"⟨EOR⟩

Refer to Figure 2-7 for information on how to decode this learn string.

The syntax for the Learn Interface "LI" Command is as follows:

"LI" Memory Location Code: Learn String

The Generator stores the learn string in the memory location designated by the memory location code. If the memory location specified is 99, the instrument is programmed to the data sent in the learn string.

Example

To program the Generator to the Instrument Preset State:

"LI99BOABAAAAPPJMAAAKAAAAAAAABBOBKKAAAAAPECEAABPE
AAABDAEEBBAGBLKKMPAC"

Note that the binary learn string in this example is the same as the learn string returned from memory location 98 which contains a record of the Instrument Preset State.

Instructions:

1. Convert the hexadecimal number to a signed decimal number as follows:

   a. Multiply the most significant hexadecimal digit by 16.

   b. Add the next significant digit to the value obtained in Step a.

   c. Multiply the sum of Step b by 16, and add in the next hexadecimal digit until the least significant hexadecimal digit has been added.

NOTE

If the hexadecimal number started with an 8 through F, the number is negative. Perform Step d for negative numbers.

   d. Subtract, 16 from the number raised to the power of the number of digits.

Example of Instruction 1:

To convert hexadecimal number 1E:

$(1 * 16) + 14 = 30$

(Since the most significant digit is 1, the number is not negative.)

Character Position	1	2	3	4	5	6	7	8	9	10	11	12	13	14	15	16	17	18
Character	B	0	A	B	A	A	A	A	P	P	J	M	A	A	A	K	A	A

19	20	21	22	23	24	25	26	27	28	29	30	31	32	33	34	35	36	37	38	39	40	41
A	A	A	A	A	A	B	B	0	B	K	D	A	A	A	A	A	P	E	C	E	A	A

42	43	44	45	46	47	48	49	50	51	52	53	54	55	56	57	58	59	60	61	62	63	64
B	P	E	A	A	A	B	D	A	E	E	B	B	A	G	B	L	K	K	M	P	A	C

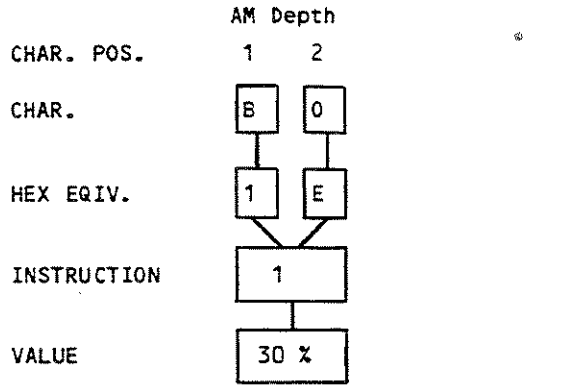

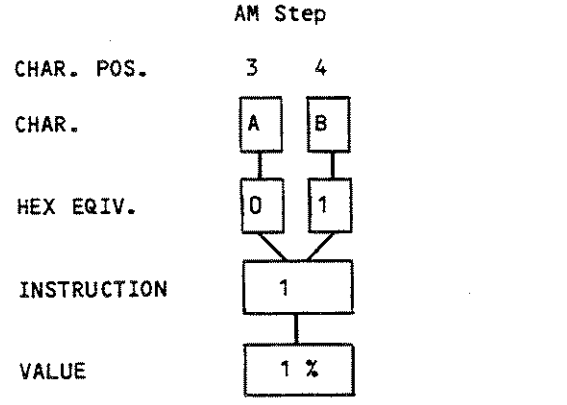

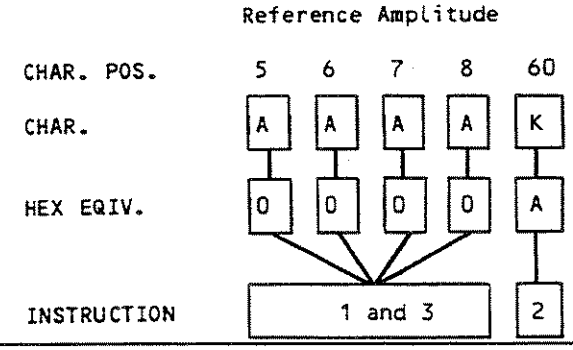

Figure 2-7. Learn String Example

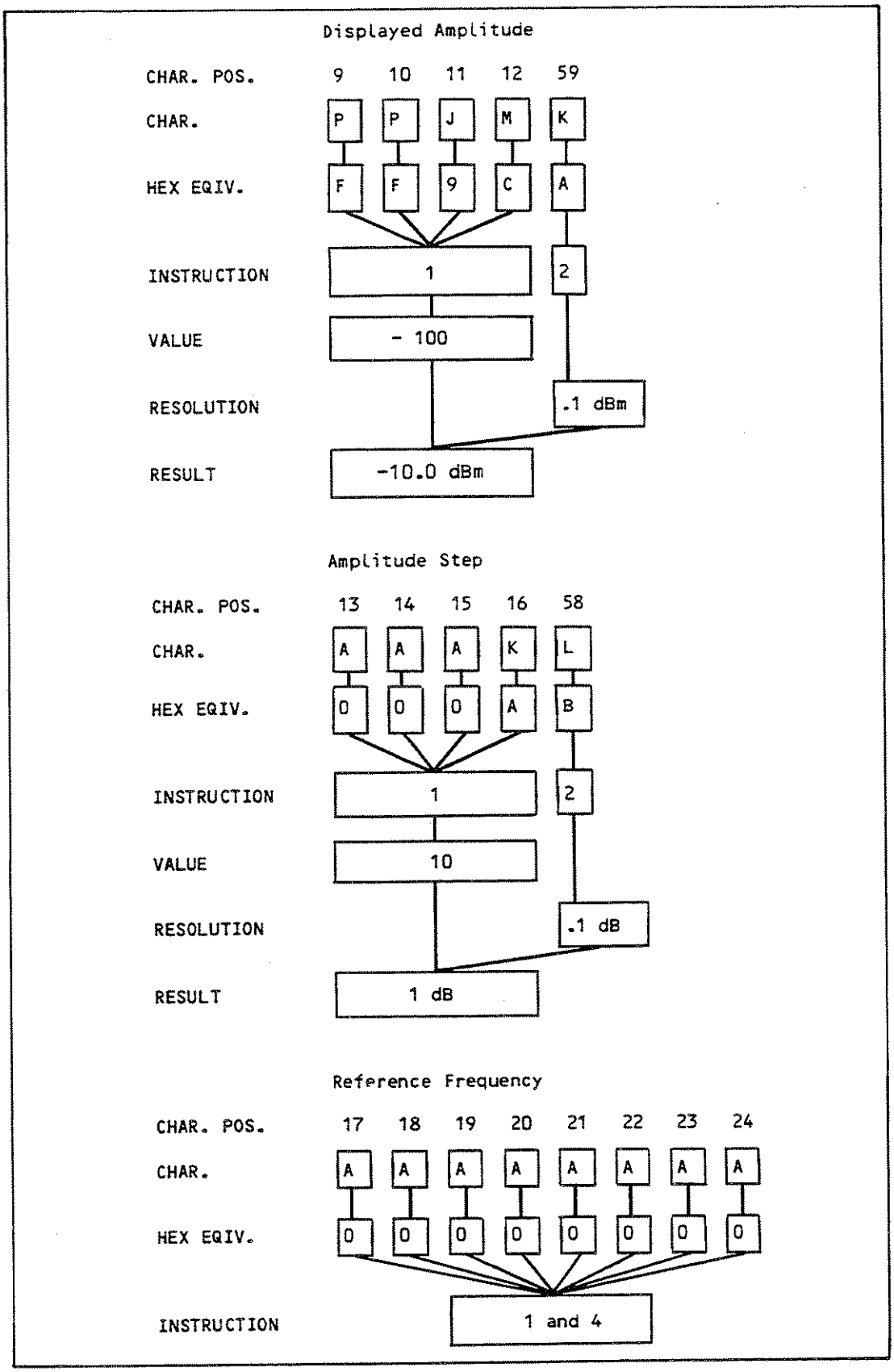

Figure 2-7. Learn String Example (cont)

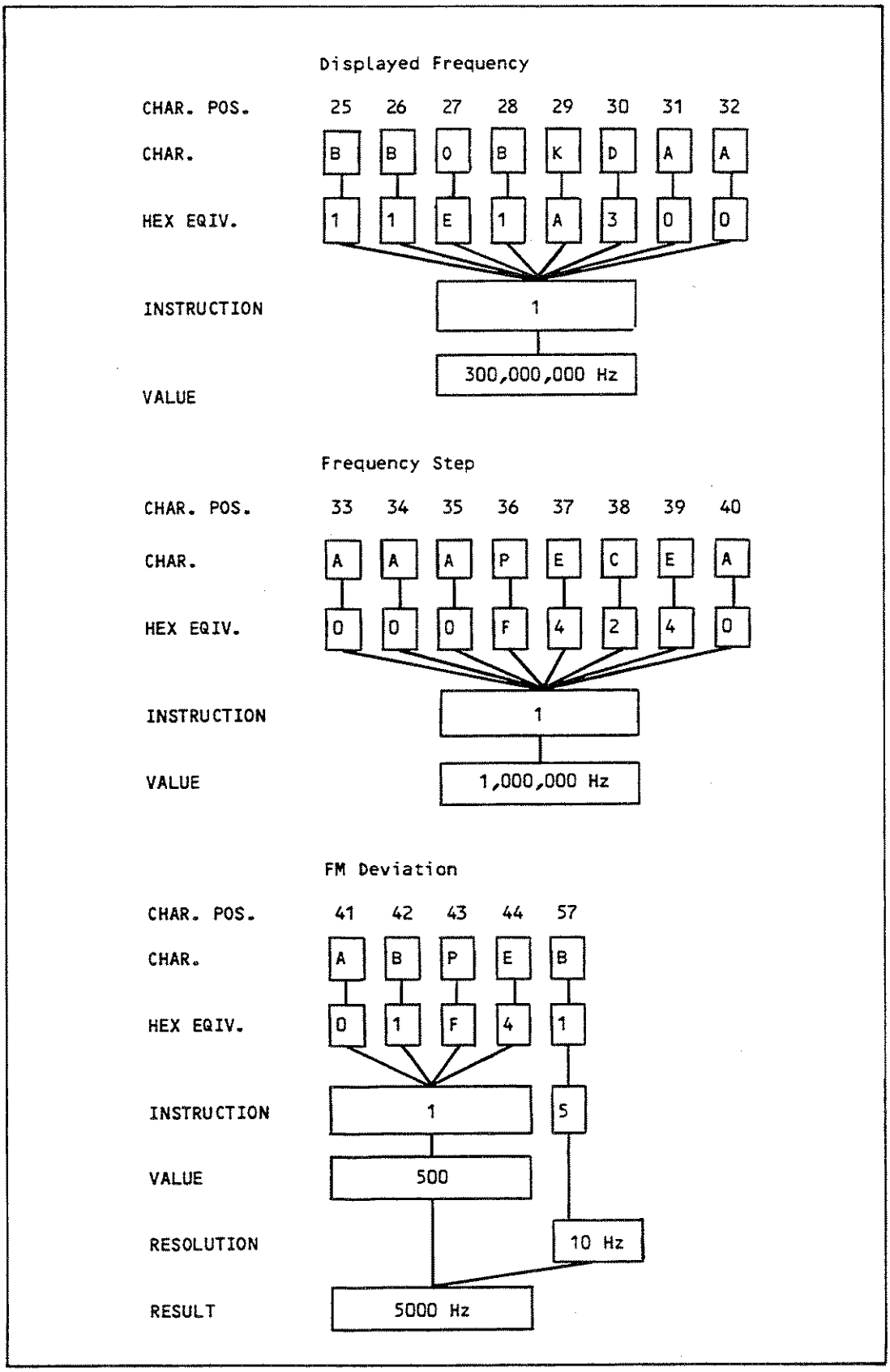

Figure 2-7. Learn String Example (cont)

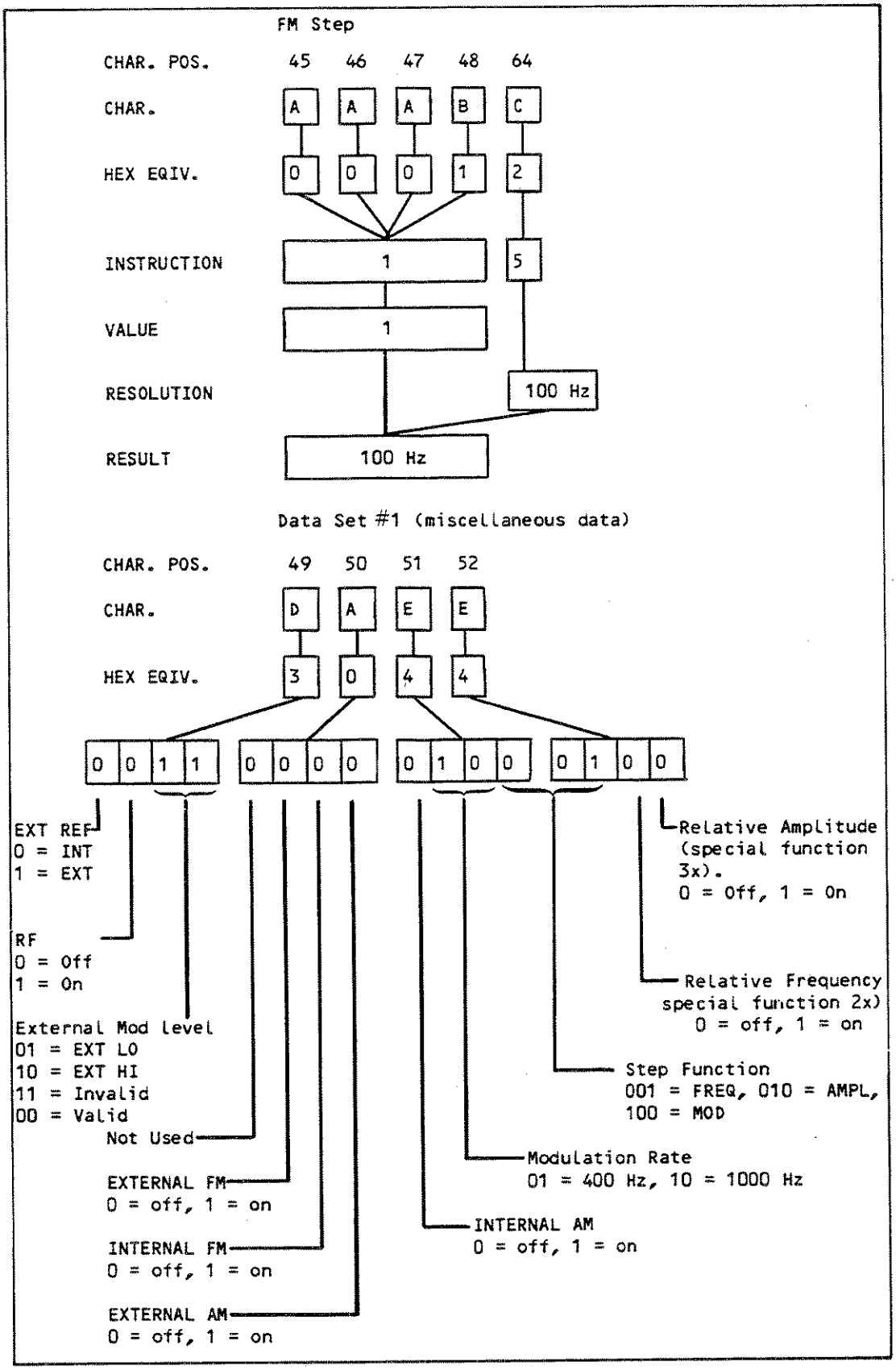

Figure 2-7. Learn String Example (cont)

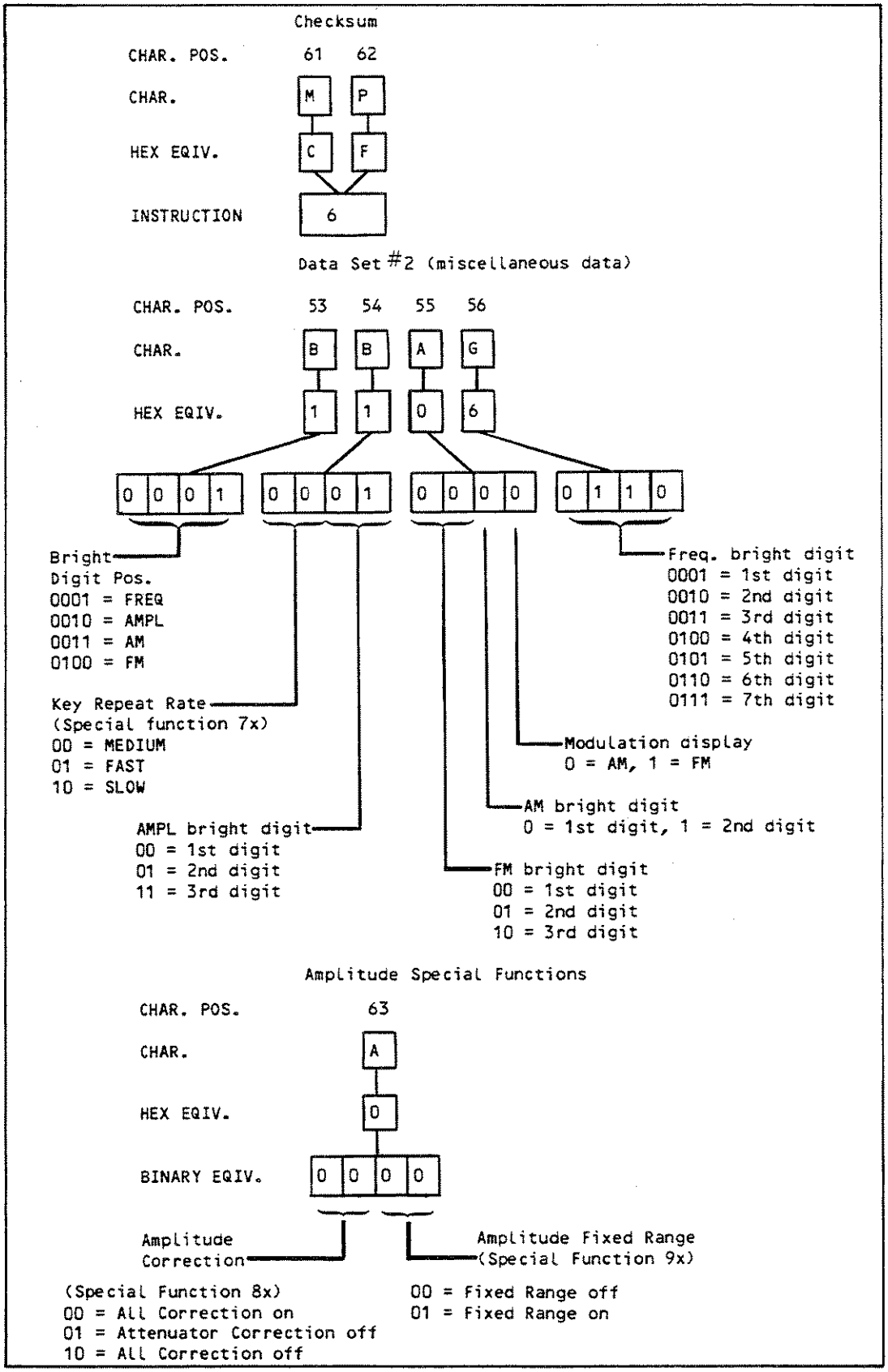

Figure 2-7. Learn String Example (cont)

To convert hexadecimal number FF9C:

$$(((((15 * 16) + 15) * 16) + 9) * 16) + 12 = 65436$$

(Since the most significant digit is F, the number is negative.)

Using Step d; 16 4 = 65536, 65436 - 65536 = -100. The signed decimal equivalent to FF9C is -100.

2. Amplitude quantities have a number and a resolution associated with them. This applies to the Displayed Amplitude, Reference Amplitude, and Amplitude Step.

   Use the following procedure to identify the resolution of an amplitude quantity:

   a. If the resolution is A or B (hexadecimal), the resolution of the number is 0.1 dBm or 0.1 dB units.

Example:

The Displayed Amplitude (in this figure) is -100 with a resolution of A.

   a. The actual displayed amplitude is -10.0 dBm.

   b. If the stored resolution is 0 through 9 (hexadecimal), the amplitude quantity is in volts. To convert the number to the actual amplitude in nanovolts, multiply the amplitude number by the power of ten represented by the resolution.

      Example: An Amplitude Step of 12, with a resolution of 6 would be an actual amplitude step of 12,000,000 nV or 12 mV.

3. If the Relative Amplitude mode is off, the data stored in the reference amplitude location is not used.

4. If the Relative Frequency mode is off, the data stored in the reference frequency location is not used.

5. FM and FM Step quantities have a number and a resolution associated with them. To convert the number to the FM quantity in Hz, multiply the number by the power of ten represented by the resolution.

6. The checksum data is calculated by adding the data in the learn string, two hexadecimal digits at a time. The total, including the checksum, should add up to a number whose least significant two hexadecimal digits are 01.

NOTE

The memory location code must be an unsigned integer indicating the memory location to be learned. Memory location 99 refers to the current instrument settings. Memory location 98 refers to the Instrument Preset State as listed in Table 2-3.

The characters in the learn string correspond to each Generator function. A description of how to interpret the characters in the learn string is given in Figure 2-7. Table 2-12 shows the conversion from the learn string to the hexadecimal character.

Table 2-12. Learn Character to Hexadecimal Conversion

LEARN CHARACTER	HEXADECIMAL EQUIVALENT	DECIMAL EQUIVALENT
A	0	0
B	1	1
C	2	2
D	3	3
E	4	4
F	5	5
G	6	6
H	7	7
I	8	8
J	9	9
K	A	10
L	B	11
M	C	12
N	D	13
O	E	14
P	F	15

2-54. CLEAR COMMANDS

The following IEEE-488 clear commands are recognized by the Generator:

"CB" Clear IEEE-488 input buffer
"CE" Clear IEEE-488 rejected entry error status
"CL" Clear instrument

The "CB" command can be used to clear the Generator output buffer. The output buffer should be cleared at the beginning of any remote program to synchronize data output. The output buffer is also cleared on power up, with the "CL" clear Generator command, or by the SDC and DCL clear interface messages.

The "CE" command can be used to explicitly clear the error status. The error status is also cleared when it is interrogated with the "IR" command, or the "CL" clear Generator command, or the SDC and DCL clear.

The "CL" command is used to clear the instrument state. The same actions are performed with the SDC and DCL clear interface messages. (In addition, the input buffer is cleared with the clear interface messages.) The following IEEE-488 commands are performed with the clear Generator command: "RC98, RO1, CE, CB, RM0, TM0, EM0, VM0, UM0, SM192, SP08, XF0, DW0, CT"⟨EOR⟩.

2-55. INTERFACE MODE COMMANDS

Interface Mode commands are used to configure the Generator for different modes of IEEE-488 interface operation. Since the Generator knows when its RF output has settled, it can be configured to synchronize itself with the Controller. This eliminates WAIT statements in the program, which are normally used to allow time for the output of the controlled device to settle. Table 2-13 lists the Interface Mode Commands.

Table 2-13. Interface Mode Commands

COMMAND	DESCRIPTION	COMMAND STATUS
"EM"	Error Mode	1 = on, 0 = off
"RM"	Record Mode	1 = on, 0 = off
"TM"	Select Terminator	1 = CR, 0 = LF
"UM"	Unbuffered Mode	1 = on, 0 = off
"VM"	Valid Mode	1 = on, 0 = off

The error mode selects when the IEEE-488 rejected entry status is cleared. If turned on, the error status is cleared when a new message is processed. If turned off, the status is cleared only when interrogated with the "IR" (interrogate rejected entry) command or when explicitly cleared with the "CE" (clear error command).

The record mode selects whether the message unit is a record or a command. When turned on, the message unit is a record. When turned off, the message unit is a command.

The terminator mode selects the character used as the record terminator. The terminator character is not used for command processing unless the record mode is enabled. When turned on, the record terminator CR (carriage return) is used. If turned off, the record terminator LF (line feed) is used. The record terminator character is the last character in all IEEE-488 messages sent from the Generator.

The unbuffered mode selects when messages from the IEEE-488 interface are processed. When turned on, messages are read from the IEEE-488 interface only when the microprocessor is ready to process them. In this mode, the input buffer will contain a maximum of one message. (A message may be one command or one record, depending on the setting of the record mode.) When turned off, messages are read from the IEEE-488 interface to the input buffer of the Generator at the fastest rate. In this mode, the input buffer may contain up to 80 characters.

The valid mode selects when messages are processed by the Generator microprocessor. When turned on, processing of a new message is begun only after the RF output has settled and become valid. When turned off, a new message is processed immediately after the completion of the previous message.

The interface modes can also be programmed using the command, "@" n (where n is an integer). The interface modes are set to the value of n where n is the sum of the codes for the desired modes. The integer codes for the interface modes that can be programmed using the "@" n commands are as follows:

Terminator Mode = 1
Record Mode = 2
Valid Mode = 4
Unbuffered Mode = 8
Error Mode = 16

For example, to select the record mode and valid mode, the command is "@" 6.

Interface Mode Example

In this example, the RF output of Generator is connected to a circuit that is being measured by a voltmeter. The output of the Generator must be settled before the voltmeter is given it's command to make a measurement.

A Fluke 1722A program might look something like:

```
PRINT @1, "CL,TM1,RM1,VM1,UM1"   ! initialize the 6061, select modes
PRINT @1, "FR100MZ,AP-25DB"      ! program the 6061A
PRINT @2, "?"                    ! trigger the voltmeter
INPUT @2, R$                     ! get the reading
```

The entire record is transferred into the Generator before processing begins. In this example, processing begins when the record terminator CR is received. The following character (LF in this case) will not be received into the Generator until the entire record is processed and the output has settled. No wait statement is needed between setting up the Generator and taking the measurement because the Generator will not handshake the LF character until its output has settled.

NOTE

A record is a string of characters separated by ⟨EOR⟩. A message is the smallest group of characters that the Generator can process when programmed from the IEEE-488 interface.

NOTE

The output valid state of the Generator occurs 45 ms after any hardware has been changed.

2-56. INTERROGATE COMMANDS

Interrogate commands allow the status of the Generator to be given over the IEEE-488 interface. These commands consist of headers only. The interrogate commands available on the IEEE-488 interface are:

"ID" Give Instrument ID
"IE" Elapsed Time Indicator
"II" Interface Mode Status
"IO" Option Loading
"IR" IEEE-488 Rejected Entry Status
"IT" Self-Test Results
"IU" UNCAL (uncalibrated) Status
"IV" Software Revision Level

When the "ID" command is sent, the Generator responds with its instrument model number (and end of record character) as in "6061A"⟨EOR⟩.

When the "IE" command is sent, the Generator responds with the time the instrument has been in operation since it was manufactured. The time is 9 digits, a decimal point, a 10th digit and the ⟨EOR⟩ character. The time is in .1 hour units. For example, "000003459.3"⟨EOR⟩ indicates 3459.3 hours of operation since manufacture.

The "II" command interrogates the current selection of interface modes. A 5-digit integer followed by the ⟨EOR⟩ character is the sum of the modes selected as follows:

Terminator mode= 1
Record mode = 2
Valid mode = 4
Unbuffered mode= 8
Error Mode = 16

The "IO" command interrogates the Generator for its option complement. The returned record contains three intergers, separated by commas, that indicates configuration of options. For the 6061A, the first number is always 7, which indicates that the Generator being interrogated is in fact a 6061A. For the 6060B, the first number is always 6, which indicates that the Generator being interrogated is in fact a 6060B. The two remaining numbers are the sum of the option related numbers as follows:

2nd Number

4 = -130 High-Stability Reference Option
16 = -132 Medium Stability Option

3rd Number

2 = -830 Rear Output Option

For example, "7,4,2" would indicate a 6061A with options -130, and -830.

"6,12,0" would indicate a 6060B with option -132.

The "IR" command interrogates the Generator for rejected entry error status. (See Table 2-6 for a list of rejected entry codes.) The returned record is the sum of errors that have been detected while processing IEEE-488 commands. The status is cleared when interrogated with the "IR" command. The status can also be explicitly cleared with the "CE" command and is also cleared on the "CL" command and the clear interface messages DCL and SDC.

The "IT" command interrogates the Generator for the self-test results. Table 2-14. lists the self-test error codes. The self tests are performed on the Generator power-up and can also be initiated with special function 02.

The self-test results are reported in four fields which are explained in the table. Any non-zero code indicates that some tests failed. Further details of the self-test results are listed in the Service Section. Table 2-14. shows the self-test error codes.

The "IU" command interrogates the Generator for the UNCAL entry status. (See Table 2-5 for a list of the UNCAL Error Codes.)

The "IV" command interrogates the Generator for its current software revision level. The returned record is similar to the following:

"V1.0" ⟨EOR⟩.

This means that the software revision level is Version 1.0.

Table 2-14. Self-Test Error Codes

```
          MOD        FREQ       AMPL
          aa       -bbb   ccc    ddd

aa  = Modulation (AM and FM) test results
-   = If displayed, indicates the self test did not complete
bbb = Frequency test results
ccc = Digital test results
ddd = Amplitude test results
```

2-57. MONITOR COMMANDS

The Generator monitor commands are intended for troubleshooting and maintenance procedures. They allow the instrument hardware to be programmed to states not normally possible with the regular programming commands.

CAUTION

The output of the Generator is not guaranteed if the Generator hardware has been changed with these monitor commands.

There are three types of monitor commands: Input/Output, Read/Write, and Hardware Control. Table 2-15 lists the Input/Output types of monitor commands. Table 2-16 lists the Read/Write types of monitor commands. Table 2-17 lists the Hardware Control types of monitor commands.

2-58. SRQ COMMANDS

The Generator asserts the SRQ bus management line on the IEEE-488 interface bus whenever the Generator requires service. The Controller can then perform a serial poll to determine the need for service. The set mask command is used to designate those needs that require service. The SRQ commands are as follows:

"SM" Set SRQ Mask
"IM" Interrogate SRQ Mask
"XF" Local Operation Alert Mode

The SRQ mask is set to the sum of the reason values listed in Table 2-18. These reason values correspond to the allowable reasons that will be requiring service. The SRQ Mask is set by the following command sequence:

"SM" Sum of Reasons

The Generator asserts SRQ when one of the allowed reasons becomes true. The serial poll response is the sum of those values for reasons that are currently true, independent of the setting of the SRQ mask. For example, if the rejected entry SRQ is enabled with "SM2" and a rejected entry occurs, the serial poll response will indicate that the Generator generated the SRQ (value of 64) and that a rejected entry occurred (value of 2). In addition, other values may be set. The default SRQ mask is 192.

The "IM" command interrogates the current SRQ mask, and an integer is returned.

The "XF" command enables a mode that causes an SRQ to be generated any time the Generator processes an entry. In this mode, a front panel SRQ is generated (i.e., the serial poll response indicates that a front panel SRQ is the cause of the SRQ). This mode is enabled and disabled with its own command, not through the Set SRQ Mask commands (as are all other SRQs). The Alert Mode is enabled/disabled as follows:

"XF0" = Alert Mode off, "XF1" = Alert Mode on.

2-59. TRIGGER COMMANDS

The Generator has the ability to preprogram a command string of arbitrary Generator programming commands. This command string is executed whenever the trigger command "TR" or the IEEE-488 group execute trigger interface message (GET) is received. This method of programming the Generator can be used when a long string of commands is to be sent to the Generator over and over. The programming time is shortened by the time required to transmit the string of characters from the controller to the Generator.

Table 2-15. Input/Output Monitor Commands

COMMAND NAME	COMMAND	VALUE	DESIGNATOR	NAME	LOCATION
Read Input Bit	"IB"		"EX"	exrefl	A2A7, U11-13
			"HS"	hsoptl	A2A7, U11-14
			"IE"	ieinl	A2A7, U11-7
			"LF"	lrfm	A2A7, U40-13
			"MH"	mlevhi	A2A7, U40-8
			"ML"	mlevlo	A2A7, U40-3
			"NV"	nvinl	A2A7, U11-8
			"RO"	roptl	A2A7, U40-17
			"RP"	rppl	A2A7, U11-3
			"RT"	rptrpl	A2A7, U11-4
			"SR"	shrefl	A2A7, U40-18
			"TQ"	trseql	A2A7, U40-4
			"UK"	unlok	A2A7, U11-17
			"UV"	unlvl	A2A7, U11-18
			"XA"	msoptl	A2A7, U40-14
			"XB"	extra-b	A2A7, U40-7
Set Output Bit	"OB"	0 or 1	"CL"	clr	A2A7, U17-16
			"EA"	extam	A2A4, U308-19
			"EF"	extfm	A2A4, U308-16
			"FE"	fmen	A2A1, U19-19
			"FP"	front-panel	A2A7, U17-9
			"HO"	haocth	A2A4, U305-5
			"HT"	het	A2A4, U305-9
			"IA"	intam	A2A4, U308-15
			"IF"	intfm	A2A4, U308-12
			"LP"	mid	A2A4, U305-6
			"MA"	rmux0	A2A1, U32-5
			"MB"	rmux1	A2A1, U32-2
			"MF"	mf400l	A2A4, U308-9
			"MG"	module-gate	A2A7, U17-6
			"MS"	trmodl	A2A1, U32-15
			"NE"	nven	A2A7, U17-5
			"PU"	pulse	A2A4, U308-6
			"RI"	rinh	A2A1, U32-9
			"RR"	rprst	A2A7, U17-2
			"SE"	shen	A2A1, U32-12
			"SH"	shet	A2A1, U32-16
			"XO"	xoenl	A2A1, U32-6
			"YA"	extra-a	A2A7, U17-19
			"YB"	extra-b	A2A7, U17-15
			"YC"	extra-c	A2A7, U17-12
Set Output DAC	"OD" (integer value)		(DAC location)		
		0-255	"AM"	AM dac	n.a.
		0-127	"AT"	attenuator	A2A7, U27-5, 6, 9, 12, 15, 16, 19
		0-1023	"FM"	FM dac	A2A4, U403-6 through 13
		0-7	"FR"	FM range	A2A1, U19-12,15,16
		0-1023	"KN"	kn dac	A2A1, U27-4 through 13
		0-1023	"KV"	kv dac	A2A1, U29-4 through 13
		0-4095	"LE"	level dac	A2A4, U303-4 through 15
		0-255	"TC"	temp.comp.dac	n.a.

Table 2-16. Read/Write Monitor Commands

COMMAND NAME	COMMAND SYNTAX	NOTES
Read byte	"RB" memory location	1
Read word	"RW" memory location	1
Define write address	"DW" memory location	2
Write byte	"WB" value	2
Write word	"WW" value	2

Notes

1. The Generator responds to these commands with the value of the byte or word in the memory location addressed. The memory location must be an unsigned integer. The value returned is followed by an <EOR>. If the memory location is specified in hexadecimal, then the value is returned in hexadecimal preceded by an "X".

2. The Define Write Address command specifies the write address used with the Write Byte and Write Word commands. When the Write Byte and Write Word commands are used, the specified data will be written to that write address.

Table 2-17. Hardware Control Monitor Commands

COMMAND NAME	COMMAND SYNTAX	NOTES
Read attenuation	"XA"	1
Set attenuation	"XB" integer	1
Set synthesizer frequency	"XD" floating point decimal "MZ"	2
RF on/off	"XR" "0" or "1"	3

Notes

1. The current settings of the Attenuator can be read or set. The attenuation is a number from 0 to 23 where the number specifies the multiple of 6-dB attenuation. Zero indicates no attenuation, and 23 is the maximum attenuation. Only the attenuators are changed with the "XB" command. The value of the attenuation will be output on the "XA" command as an unsigned integer followed by <EOR>.

2. The "XD" command can be used to program the Generator to the specified frequency. Only the synthesizer circuits on the Synthesizer PCB is programmed. No offset is added, no filters are programmed, no VCO compensation is calculated, and no level correction is calculated.

3. "XR0" programs all attenuation, and "XR1" restores the attenuator to its previous state.

The trigger commands are as follows:

"CT" Configure Trigger
"TR" Execute Trigger Buffer

The configure trigger command is followed by a string of any Generator programming commands up to 71 characters in length. The validity of the programming commands is not checked until the trigger buffer is executed. The power-on value of the trigger string is null (nothing).

Table 2-18. SRQ Mask and Status Values

VALUE	REASON	TRUE	FALSE
1	Ready	Input buffer is empty and no commands are being processed.	Input buffer is not empty or commands are being processed.
2	Rejected Entry	IEEE-488 rejected entry; error code is not zero.	IEEE-488 rejected entry error; code is zero.
4	Uncalibrated	RF output is not calibrated. (Front panel 'UNCAL' indicator is lit.)	RF output is calibrated. (Front panel 'UNCAL' indicator is not lit.)
8	Power on	Instrument has powered up.	Special function 08.
16	Output valid	RF output is settled.	RF output is not settled.
32	Not Used		
64	RQS	SRQ mask ANDed with currently set values is not zero.	Reason for SRQ goes away or serial poll is performed.
128	Front panel	Special function 07.	Special function 08.

The trigger command causes execution of the trigger buffer, which has been preprogrammed with the configure trigger command "CT". The trigger buffer can also be executed by sending the IEEE-488 group execute trigger interface message (GET).

2-60. Command Processing

The following paragraphs describe how IEEE-488 commands are processed by the Generator. Command processing is a term for how commands are executed and how errors are handled.

2-61. COMMAND EXECUTION

The execution of the IEEE-488 commands depends on the selection of interface modes with one exception: if an IEEE-488 input is buffered and the buffer becomes full, command execution starts and no further input is accepted until there is room in the input buffer. For more details, refer to the paragraphs on Interface Modes.

2-62. ERROR HANDLING

The Generator detects two types of errors while processing IEEE-488 commands: syntax errors and processing errors. All errors are accumulated until the error status is interrogated or is explicitly cleared. The IEEE-488 rejected entry status is interrogated with the "IR" command. The error status is cleared with one of the following commands:

"CE" Clear Error Command
"CL" Clear Command
DCL or SDC Clear Interface Messages

The error status is also cleared on power-up.

The SRQ mask can be set to assert SRQ when an error is detected. The SRQ is unasserted when the error status is cleared.

Syntax errors are commands that do not have the correct syntax for the specified header. For example, "FE5" is a syntax error because the external FM command requires a Boolean numeric field. Unrecognized headers are also syntax errors. An IEEE-488 syntax error causes all commands from the point of the error up to the next string terminator or record terminator to be ignored.

Processing errors are commands that are syntactically valid, but the requested value is outside the range of programmable values. For example, "FR99GZ" is syntactically correct, but the Generator cannot be programmed to a frequency of 99 gigahertz. Command processing continues with the next command.

2-63. Timing Data

The programming time can be broken down into four groups: transfer of commands to Generator, command parsing time, software programming time, and instrument settling time.

The total programming time depends on the selection of the interface modes. In some modes, programming steps are performed in parallel and can increase throughput. This section gives some typical timing data for the above four programming steps and describes how the interface modes affect their relative timing.

2-64. TRANSFER OF COMMANDS TO GENERATOR

The maximum rate of transfer is 0.4 to 0.5 ms per character. With most IEEE-488 controllers, all characters sent with a single output or print statement is transferred together at the maximum rate. The total time to transfer commands to the Generator is obtained by multiplying the number of characters by the rate of transfer.

2-65. COMMAND-PARSING TIME

Command-parsing time is the sum of the time required to process the header, the numeric, and the suffix. Some commands do not have numerics or suffixes. Table 2-19 gives the typical time it takes to process the different components of a command.

2-66. SOFTWARE PROGRAMMING TIME

The minimum time required to process a command is 20 ms. Most of the commands that do not program the hardware (such as storing step values) are programmed in 20 ms. Table 2-20 gives the typical time value for programming the different functions in the Generator.

2-67. INSTRUMENT-SETTLING TIME

Commands that do not change the state of the hardware (such as programming step values) have no settling time after the software-processing time.

For all other Generator parameters, except frequency and recall, the instrument has settled by the time the software-programming time is up, so no additional instrument-settling time is required.

Worst case frequency changes (including recalls) typically settle within 35 ms after the software-programming time. If level correction is disabled, this settling time is increased to 45 ms. Small frequency changes (not crossing a band) typically settle by the time the software-programming time is up, so no additional instrument-settling time is required.

Table 2-19. Command-Parsing Time

COMMAND COMPONENT	TIME
Header	2 ms
Boolean Numeric	1 ms
Unsigned Integer Numeric	2 ms + 1 ms per character
Floating-Point Numeric	2 ms + 1 ms per character
Trigger-String Numeric	10 ms + 0.5 ms per character
Suffix	1 to 1.5 ms
Learn-Interface Suffix	35 ms

Table 2-20. Typical Programming Time of the Generator Functions

FUNCTION	TIME (IN ms)	NOTES
Frequency	55	1, 2, 3, 4
Amplitude in Volts	50	1, 2, 4, 5
Amplitude in dBm	90	1, 2, 4, 5
AM Depth	45	2, 4
FM Deviation	30	4
Modulation Frequency	25	
Enable/Disable AM	55	2.
Enable/Disable FM	25	
Recall 98	185	6, 5
RF Output On	45	2
RF Output Off	30	

Notes

1. May take up to 5 ms longer if the relative mode is enabled.
2. Can save 10 ms if all level correction is disabled with special function 81.
3. Add 20 ms when frequency changes from greater than or equal to 245 MHz to less than 245 MHz. Subtract 20 ms from frequency hardware-settling time in this case.
4. Edits and steps may take up to 5 ms longer than the programming function directly.
5. Add 5 ms when the Attenuator settings change.
6. Recalls vary considerably depending on the stored data. Maximum is approximately 250 ms.

2-68. TIMING OPTIMIZATION

Timing depends upon the interface modes selected. Read the paragraphs on Interface Mode Commands for a complete description of the interface modes.

The transfer of commands from the IEEE-488 controller to the Generator can never be processed in parallel with anything else. The transfer of commands usually happens simultaneously, regardless of which interface mode is selected.

The parsing of the command and programming the new instrument state is performed one message unit at a time. The record mode selects a command or a record as the

message unit. The record mode off ("RM0") is slower since there is extra processing between message units, and the message unit is smaller.

If the valid mode is enabled, the processing of message units is delayed until the Generator has settled from the previous message. If the output of the Generator does not need to be settled between programming strings, the valid mode should be turned off to speed up processing. If the output does not need to be settled between commands, but needs to be settled between records, enable the valid mode and the record mode. The instrument processes commands within the record as fast as possible and wait for the output to settle only between records.

2-69. Power-on Conditions

Table 2-21 lists the instrument parameters at power-on. The remote clear commands can be used to reset all parameters except the last memory location and the remote/local state.

Table 2-21. IEEE-488 Power-On State

INSTRUMENT PARAMETER	STATE	NOTES
Memory location parameters	Same as power off	1
RF on/off	Same as power off	
Last memory location	Same as power off	2
Remote/local state	Local	
IEEE-488 output buffer	Cleared	
IEEE-488 input buffer	Cleared	
Valid mode	Same as power off	
Record terminator	Same as power off	
Unbuffered mode	Same as power off	
Record mode	Same as power off	
SRQ mask	Same as power off	
Trigger configuration	Same as power off	
SRQ interface signal	May be asserted	3

Notes

1. The contents of memory location 98 (Instrument Preset State) is listed in Table 2-3.
2. The last memory location is used for sequence operations.
3. If the SRQ mask has the power on, output valid, or ready SRQ enabled, the SRQ interface signal is asserted on power-on.

Section 3
Theory of Operation

3-1. INTRODUCTION

This section of the manual describes the theory of operation for the Generator. There are four major headings:

General Description
Functional Description
Software Operation
Detailed Circuit Descriptions

The General Description briefly explains the functions and components of the three major modules of the Generator. The Functional Description covers the main output parameters, amplitude, frequency, and modulation. The Software Operation section describes the software and how it affects the hardware. The Detailed Circuit Description is a comprehensive explanation of the operation of each circuit assembly.

3-2. GENERAL DESCRIPTION

The Generator has three major sections. The front section includes the keyboard and display for local control. The module section includes the frequency, level, modulation, and control circuits. The rear section includes the power supply, cooling fan, and assorted external connectors.

3-3. Front Section

The front section of the Generator provides the operator interface. It includes the primary controls, connectors, and indicators of the Generator. All front panel keys and displays (except the power switch that controls the power supply directly) are monitored and handled by the Controller in the module section.

The front section consists of the elastomeric switches mounted in a sheet metal housing, the display lens, the POWER ON/OFF switch, and the MOD INPUT connector. The front section also includes the following electrical assemblies:

A1A1 Display PCA
A1A2 Switch PCA

3-4. Module Section

The module section is a multi-compartmented, shielded enclosure that includes the circuits that generate the instrument stimulus functions: frequency, modulation, and amplitude. The Controller is also located here. The Controller governs the Generator operation and at power-on determines if any options are installed by checking the option status bits.

The module section consists of a cast module frame with gasketed covers and includes the following electrical assemblies:

A2A1 Synthesizer PCA
A2A2 VCO PCA
A2A4 Output PCA
A2A5 Attenuator/RPP Assembly
A2A7 Controller PCA
A2A8 Non Volatile Memory PCA

3-5. Rear Section

The rear section consists of a fuse/filter/line-voltage selector switch (A3FL1), a transformer (A3T1), a fan (A3B1), and various external connectors. The rear section also includes the following electrical assemblies:

A3A1 Power Supply PCA
A3A3 IEEE-488 Interface Assembly

The power supply is a linear design providing two +15V, -15V, +5V, +37V, +18V, and 6V ac to the Generator. All the power supplies are series-pass regulated except the 6V ac filament supply and the +18V supply, which provides power to the Attenuator relays and Reverse Power Protector (RPP) relays.

The fuse/filter/line-voltage selector allows the Generator to operate from any common supply voltage (100/120/220/240). The transformer A3T1, with its two primary windings, accepts these four voltages and produces the necessary five secondary voltages. The A3A1 Power Supply PCA rectifies, filters, and regulates these secondary voltages to produce the dc voltages required by the Generator. The dc fan (A3B1) is connected to the unregulated +5V supply. The fan operates only when line power is available and the front panel POWER switch is ON.

The Option -130 High-Stability Reference is also located in the rear section. The Option -130 High-Stability Reference operates whenever the instrument is plugged into an active ac outlet, regardless of the position of the instrument POWER switch.

NOTE

The power supply for Option -130 High-Stability Reference is separate. It has an automatic change over switch for different input line voltages.

3-6. FUNCTIONAL DESCRIPTION

The following paragraphs describe the key output parameters of the Generator: level, amplitude modulation, frequency, and frequency modulation.

3-7. Level

Level control is provided by two separate circuits, a step attenuator and a vernier level DAC. The 6.02 dB per step Attenuator/RPP, (A2A5) provides coarse control. Fine level control is provided by a vernier level DAC that varies the automatic level control voltage (ALC). The microprocessor automatically controls the step attenuator and the vernier level DAC. The microprocessor also applies level correction to compensate for the Generator frequency response.

Each Generator has level correction data for the Output and Attenuator assemblies, stored in the Output and Attenuator calibration EPROMs. The EPROMs are located on

the Controller assembly. The correction data is based on measurements of each assembly during calibration of the Generator at the factory.

This microprocessor level correction data is applied only to the vernier level DAC; it does not affect the coarse level control provided by the Attenuator. In other words, all Generators have the same attenuator pads inserted at a selected level even though the correction data is different for each Generator.

To improve level accuracy in relation to temperature, the Generator uses a software temperature compensation technique. This technique uses data that is the same for all Generators regardless of the options installed.

3-8. Amplitude Modulation

The output of the level DAC is the ALC loop control voltage. The Generator output signal is amplitude modulated by varying this control voltage with the modulating signal. A 1V peak modulating signal from the internal modulation oscillator or from the external MOD INPUT connector is applied to the AM DAC, a multiplying D-to-A Converter. The multiplying factor of this DAC, corresponding to the programmed percentage of modulation, is factored by the Controller.

The modulation signal from the AM DAC is summed with a fixed dc reference voltage. The composite signal (dc plus modulation) is applied to the LEVEL DAC, a level control-multiplying DAC. The multiplying factor for this DAC is also handled by the Controller and corresponds to the programmed signal level. The multipling factor also includes the level correction information stored in the calibration EPROMs.

The operation of the ALC loop causes the amplitude of the RF signal to conform to this varying control voltage, thus amplitude modulating the Generator output.

3-9. Frequency

The 0.01-MHz to 1050-MHz frequency coverage is divided into three main bands and a number of sub-bands corresponding to the 4 quarter-octave bands of the VCO;

Low-band	0.01 MHz to 89.99999 MHz
	90 MHZ to 244.99999 MHz
Mid-band	245 MHz to 319.99999 MHz
	320 MHz to 364.99999 MHz
	365 MHz to 444.99999 MHz
	445 MHz to 511.99999 MHz
High-band	512 MHz to 639.99999 MHz
	640 MHz to 729.99999 MHz
	730 MHz to 889.99999 MHz
	890 MHz to 1050 MHz

The high and mid bands are derived directly from a voltage-controlled oscillator (VCO) followed by a binary divider that is part of the main phase-locked loop (PLL).

This PLL synthesizes the 245- to 512-MHz band using a modified N-divider loop with a single-sideband mixer (SSB) in the feedback path. The reference frequency for the loop is 1 MHz, which would normally provide 1-MHz steps in a conventional N-divider loop. However, this Generator provides 0.02-MHz steps by using a modified N-divider circuit with pulse deletion controlled by a rate multiplier.

Additional resolution is gained by introducing a signal from the sub-synthesizer circuit into the main PLL through the SSB mixer in the feedback path. This signal provides internal frequency steps of 5 Hz. The sub-synthesizer consists of a 14-bit rate multiplier followed by a divide-by-1000.

Since the main PLL bandwidth varies with the programmed frequency (due to N changing and variations in the VCO tuning coefficient), the Controller uses compensation to program the phase detector gain via the KN DAC to maintain constant loop bandwidth. By keeping the loop bandwidth constant, loop stability and modulation transfer is controlled, thus ensuring accurate, wideband FM.

3-10. Frequency Modulation

Frequency modulation is achieved by applying the modulation signal simultaneously to the PLL VCO and the Phase Detector. Both are necessary because modulating either the VCO or the Phase Detector alone results in FM with a high-pass filter characteristic, or phase modulation with a low-pass filter characteristic. The filter characteristic cutoff frequencies are equal to the PLL bandwidth.

The modulating signal applied to the VCO and the Phase Detector is adjusted in amplitude by the KV DAC to compensate for variations in the VCO tuning coefficient. This compensation is done automatically by the Controller using factory calibration data measured on the VCO in each Generator. This compensation data is stored in the VCO Calibration EPROM.

By integrating the modulation signal applied to the Phase Detector and simultaneously applying the modulation signal to the VCO, the two effects are complementary and result in a flat FM response.

3-11. SOFTWARE OPERATION

The Generator software is executed on a Texas Instruments TMS 9995 microprocessor in the A2A7 Controller PCA. The instrument program is stored in 48K-bytes of ROM, two scratch pad RAM, 2K-bytes off-chip and 250-bytes on-chip RAM. Three 2K-byte EPROMs contain the individual Generator calibration data. The software provides the following general functions:

Interfaces with the front panel keys and the IEEE-488 Interface to provide access to the Generator functions.

Configures the Generator functional blocks to produce the required output and then applies linearization and compensation data to optimize the instrument performance and resolution.

Implements a set of self test and diagnostic functions.

3-12. User Interface

The Generator software is implemented with a simple operating system that allows several tasks to operate in a round-robin fashion on a equal priority basis. However, input and output to the front panel and to the IEEE-488 Interface execute at a higher priority and are handled as interrupt routines.

At power-on, the software performs an instrument self test and initializes both the RAM and the Generator hardware. Three tasks are continuously in operation:

Service task
Key task
IEEE-488 task

The service task checks the status signals. The key task and IEEE-488 task process user input. A fourth task is activated only when needed to process certain UNCAL (uncalibrated) or REJ ENTRY (rejected entry) conditions that cause the instrument STATUS display to flash.

3-13. Amplitude Control

Amplitude is programmed using a 23-step (6.02 dB per step) attenuator assembly and a 12-bit vernier level DAC. The level DAC settings depend on a combination of the programmed output level and amplitude correction data.

The amplitude correction data compensates for level inaccuracies and is a function of the Generator frequency. Correction factors are stored in the Output and the Attenuator Calibration EPROMs. Each Output and Attenuator assembly comes with a matched calibration EPROM. The assemblies may be replaced under the Module Exchange Program with only minor adjustments needed after installing the replacements.

3-14. Attenuators

One 6-dB, one 12-dB, and five 24-dB sections of the Attenuator are programmed in combination to provide course level control. The indicated voltages at which the Attenuator changes ranges are 2 -m volts, where

m = 1, 2, 3, ...23 for non-AM, or

m = 2, 3, ,4, ...24 for AM operation

Table 4D-14 lists the Attenuator sections programmed for various displayed levels.

3-15. Level DAC

The level DAC setting (LEV 0 through 9) is calculated from the Generator output level. If level correction is enabled, the level DAC setting is further modified by the data stored in the Output and Attenuator calibration EPROMs.

To minimize level transients that could damage external circuitry, the following sequence is used in programming the Attenuators and the level DAC when the Attenuator setting is changed:

1. The LEVEL DAC is programmed to zero.
2. The attenuator sections are reprogrammed for correct attenuation.
3. After a 5-ms wait to allow the Attenuators to settle, the LEVEL DAC settings are programmed.

3-16. Temperature Compensation

The temperature compensation DAC (TC DAC) data is stored in the Generator software as a function of the output frequency (F_o). This data is the same for each Generator.

3-17. Reverse Power Protector

The reverse power protector (RPP) protects the Generator from damaging voltages applied to the RF OUTPUT connector. The status line RPTRPL indicates whether the

RPP circuitry has tripped. If the RPP trips, the RF output is programmed off, and the RF OFF indicator flashes. The RPP circuitry is reset by the operator turning the RF OUTPUT on. This causes the Controller to reset the RPP by toggling RPRSTL, and programming the RF on.

3-18. Frequency Reference Control

Programming of the frequency reference control bits depends on the setting of the INT/EXT reference switch as well as whether or not the High-Stability Reference or Medium-Stability Reference options are installed.

3-19. Frequency Control

The output frequency (F_o) is programmable with 10-Hz resolution. The minimum calibrated output frequency is 0.01 MHz, and the maximum calibrated output frequency is 1050 MHz. The filter and band control bits are programmed in five bands and are determined by the output frequency (F_o). For each band, a synthesizer frequency is determined.

The programming data of the KV and KN DACs are calculated from the synthesizer frequency and the instrument-specific VCO Calibration EPROM data. The KV DAC settings on the high and low bands are one half the settings on the mid-band to compensate for the effective doubling of the FM deviation that occurs on the high and low bands.

3-20. Modulation On/Off

The four modulation modes are:

Internal AM
External AM
Internal FM
External FM

The modulation modes can be programmed separately or in any combination. The AM depth and FM deviation DACs are always programmed regardless of whether or not modulation is enabled. When enabling or disabling modulation, only the modulation control bits are programmed. Table 4D-16, Modulation ON/OFF Control, lists the control states for each modulation choice.

3-21. Modulation Frequency

The two internal modulation frequencies of 400 Hz and 1000 Hz are programmed with a single control bit MF400L. Table 4D-17 Modulation Frequency Control lists the MF400L control states.

3-22. Amplitude Modulation

The Generator allows amplitude modulation depth programming from 0 to 99% with 1% resolution. However, the maximum calibrated AM depth is 90%. Programming an AM depth greater than 90% causes the 'UNCAL' indicator to light. When the combination of signal amplitude and programmed AM depth exceeds +13 dBm peak, the 'UNCAL' indicator lights to warn you the output level is no longer guaranteed. Amplitude modulation depth is programmed using the 8-bit AM DAC, with a setting of 200 on the AM DAC corresponding to 100% AM modulation of the output frequency.

3-23. Frequency Modulation

Frequency modulation (FM) is programmable with three digits of resolution in the three decade ranges. Table 4D-12, FM Ranges, lists the three ranges.

3-24. FM Deviation

The FM DAC is a 10-bit DAC programmed to the FM deviation in Hz divided by the resolution. Table 4D-13 lists the settings of the FM DAC.

3-25. Self Test

At power-on, the Generator automatically self tests its digital and analog circuits. If the Generator fails any self test, the test results are automatically displayed as error codes. Several special functions are available for additional tests. (See section 4D-16.) Also, the Generator microprocessor continuously monitors two status signals, UNLVL (unleveled) and UNLOK (unlocked).

The self tests can also be invoked by using the [SPCL] [0][2] keys. The results of the self test can be displayed in the four display fields with [SPCL] [1][1] keys and can also be transmitted using the IEEE-488 Interface.

Self tests 1 through 5 are digital checks that indicate the general functionality of the Controller assembly. Self tests 6 through 10 use the two status signals UNLVL and UNLOK to test the general functionality of the RF circuitry.

During the self-test sequence all attenuators are programmed ON (maximum attenuation) to prevent unwanted signals at the output. In addition, the Generator is programmed to the internal frequency reference because the self tests fail if there is no reference supplied.

The self-test error codes and descriptions are listed in Section 4D. A brief description of the different Generator self tests are described in the following:

Test 1. The Generator RAM is verified by writing data to each memory location and checking that the same data can be read back. Both the off-chip RAM and the on-chip RAM are tested in this way.

Test 2. The data in each word of the two instrument software EPROMs is successively summed and rotated by two. The result of this procedure is compared with a checksum for each EPROM.

Test 3. The data in each of the three calibration EPROMs (VCO, Output, and Attenuator) is summed and compared with a checksum.

Test 4. The IEEE-488 (if installed) is verified by the microprocessor writing data to the IEEE-488 chip and then by reading it back to see if the response is the one expected. The operator is given a report only if the test fails.

Test 5. Each memory location of the Non-Volatile RAM is checked with a checksum.

Test 6. The low-pass filters on the Output assembly are tested by setting the frequency at the top of each of the four half-octave non-HET bands and verifying that the output is leveled. Then, the frequency is set above the cutoff frequency, and the output is checked to see if the output is unleveled.

Test 7. The synthesizer operation is verified by programming the Generator to a normal operating frequency and checking to see that the instrument is locked. The Generator is then programmed to a synthesizer frequency below 225 MHz and then above 550 MHz and is checked to see that the

instrument becomes unlocked. Finally, all frequency reference circuitry is turned off and checked to see that the Generator becomes unlocked.

Test 8. The Generator PLL operation is verified by forcing a large change in frequency. When this is done, the Generator should become unlocked and then lock again.

Test 9. The operation of the over-modulation indicator is verified by setting the KN DAC to 0 and then checking the unlocked indicator.

Test 10. Amplitude modulation is verified by overmodulating the carrier and then checking the unleveled indicator. This is done by programming a high output level and programming INT AM on with a high AM depth.

3-26. Service Special Functions

There are several special function self tests that are used as troubleshooting aids. Refer to Section 4D for detailed information regarding these troubleshooting tests.

3-27. Service IEEE-488 Commands

There are three IEEE-488 commands. These commands are described in the following paragraphs:

1. Attenuator counter in non-volatile memory.

   The 6061A software now accumulates counts in non-volatile memory of how often each of the seven attenuator sections has been actuated. Each of the counts is incremented when the attenuator pad is removed from the RF path. This means that if an attenuator pad is removed and then inserted, the count will only increment once.

   In response to the IEEE-488 command Interrogate Attenuator count ("IA"), the 6061A responds with seven counts. The counts are separated by commas and the response is terminated with the end of record character (⟨EOR⟩).

   In the following example:

Attenuator Section	Number of Actuations
A6DBL	102
A12DBL	99
A241L	1028
A242L	9
A243L	19,092
A244L	3908
A245L	412

   the response to the "IA" command will be:

   0000000102,0000000099,0000001028,0000000009,0000019092,
   0000003908,0000000412⟨EOR⟩

2. Error log in non-volatile memory.

   The 6061A software now saves the last ten errors in non- volatile memory. An error can be either a failed self test or a uncalibrated condition as a result of a hardware status line (unlok or unlvl). The elapsed time since the instrument was manufactured is also logged with the error.

   Each of the ten error logs consists of an uncalibrated (uncal) code or self test code followed by a semi-colon (";") followed by the elapsed time followed by the end of record character (⟨EOR⟩). The format of the uncal code, self test code, and elapsed time are identical to the response when interrogating the uncal code ("IU"), the self test code ("IT"), and elapsed time ("IE") respectively.

   In response to the IEEE-488 command Interrogate error Log ("IL") command, ten error logs will be sent, most recent error first.

   Examples of an error log:

   000,000,002,000;000039012.2⟨EOR⟩ Self test error (non-volatile memory failure) at 39012.2 hours since manufacture.

   000,-000,002,000;000039012.1⟨EOR⟩ Self test error (non-volatile memory failure) and the self test sequence was aborted as indicated by the "-". This error occurred at 39012.1 hours since the 6061A was manufactured.

   000000,000000,000006;000020243.2⟨EOR⟩ Amplitude became unleveled at 20243.2 hours since manufacture (third number = 4). In addition, the peak amplitude was set to > +13 dBm as indicated by the second uncal code (third number = 2).

   000000,000000,000000;000000000.0⟨EOR⟩ This special code means that there are no errors. One or more of the error logs will be this code when less than ten errors have been logged since the 6061A was manufactured.

   The number of characters in this response is much larger than the 80 characters in the 6061A's output buffer. Therefore, if the entire response is not transferred to the IEEE-488 controller, the 6061A will not be able to respond to further programming commands. Any remaining portion of the response that is not to be transferred can be cleared only by sending a device clear to the 6061A.

3. Keyboard test to send data to the IEEE-488 interface.

   Special function 04 ([SPCL][0][4]) displays a code on the front panel when each of the front panel keys is pressed. The IEEE-488 keyboard test command "KT" will display the same codes on the front panel and also send the codes to the IEEE-488 interface. The codes are listed in Table 4D-9.

   For example, when [INTFM] is pressed, "00005"⟨EOR⟩ will be sent and when [SEQ] is pressed, "00029"⟨EOR⟩ will be sent. ⟨EOR⟩ indicates the end of record character, with EOI asserted.

The code for each key pressed will be sent to the IEEE-488 interface until the [CLR LCL] key is pressed or new IEEE-488 programming commands are received. The code for the [CLR LCL] key (36) will be send at the end of the test.

3-28. Status Signals

Five status signals indicate the Generator option complement, and these status bits are interrogated at power-on self test as follows:

HSOPTL = 0 indicates Option -130 High-Stability Reference is installed.

MSREFL = 0 indicates Option -132 Medium-Stability Reference is installed.

ROPTL = 0 indicates Option -830 rear panel RF OUTPUT and MOD IN connectors is installed.

The status of the rear panel REF EXT/INT reference switch is continuously monitored with the EXREFL bit. The state of this bit is used by the Controller to display the 'EXTREF' indicator on the front panel and to program the reference source.

The RF output of the Generator is considered calibrated whenever the 'UNCAL' indicator is off. The 'UNCAL" indicator is lit, but not flashing, whenever the calibrated limit of the Generator is exceeded. However, the RF output is still considered usable.

The 'UNCAL' indicator flashes when the output of the instrument is considered unusable. This is the result of a severe overrange condition or when one of the following analog status signals becomes active.

RPTRPL = 0 indicates that the RPP circuitry has tripped. If this occurs, the RF output is programmed off to provide additional protection to the instrument. The 'RF OFF' and 'UNCAL' indicators flash to indicate that RPP has tripped.

UNLOKL = 0 indicates one of several conditions. The Synthesizer or the reference circuits could be out-of-lock. If FM is on, it could indicate FM over-modulation. The 'UNCAL' indicator flashes for any of these circumstances.

UNLVLL = 0 indicates that the output is unleveled. This could also be the result of amplitude over-modulation. With this condition, the 'UNCAL' indicator flashes.

3-29. DETAILED CIRCUIT DESCRIPTIONS

This section contains the detailed circuit descriptions for the following assemblies:

A1A1 Display PCA
A1A2 Switch PCA
A2A1 Synthesizer PCA
A2A2 VCO PCA
A2A4 Output PCA
A2A5 Attenuator/RPP Assembly
A2A7 Controller PCA
A2A8 Non-Volatile Memory PCA
A3A1 Power Supply PCA
A3A3 IEEE-488 Assembly
A5A1 Medium-Stability Reference PCA

3-30. A1A1 Display PCA

The A1A1 Display PCA provides a readout of the programmed modulation, frequency, amplitude parameters, and status information. This displayed information and the bright digit are controlled by the A2A7 Controller PCA under the direction of the instrument software. The display is comprised of two vacuum fluorescent displays and their associated control circuitry. The two displays are refreshed as four groups of eight display fields (usually a digit) each. The four groups share the digit (grid) strobes but have individual segment (anode) strobes.

3-31. DATA COMMUNICATIONS

Display data is sent through a byte-wide bidirectional data bus from the A2A7 Controller and is latched by U1 through U5 on the display board. Latch select signals DIGL, SEG1L, SEG2L, SEG3L, and SEG9L determine which latch receives the data. Level shifting buffer drivers U6 through U10 interface the TTL latches directly to the +37V anodes of the vacuum fluorescent displays.

3-32. DISPLAY FILAMENT VOLTAGE

The 6.0V ac filament voltage for the display is derived from a center-tapped winding on the power supply transformer, T1. The ac filament voltage is biased at +6.2V above ground by circuitry on the A3A1 Power Supply PCA to provide a cutoff potential for the displays.

3-33. BRIGHT-DIGIT EFFECT

The bright-digit effect is achieved by providing three extra refresh cycles (strobes) to the specified digit. Grid current-limiting resistor R3 provides uniform digit brightness by controlling electron depletion from the display cathode filaments.

3-34. SWITCHBOARD INTERFACE

The digit strobe data latched by U1 is buffered by open collector inverters U13 and U15, and strobes the front panel switch matrix. The switch columns are strobed in unison with the eight display fields. The switch matrix status is read by the tri-state buffer U14.

3-35. DISPLAY BLANKING

Monostable U11 and NOR gate U12 clear the display if new field or segment strobes are not received. This protects the display if the microprocessor stops refreshing. The display can be blanked manually by pressing [SPCL] [1][3] which sets the signal CLRL and the output of U11 low, thus clearing latches U2 through U5. To restore the display, press [SPCL] [1][2].

3-36. MODULATION-LEVEL INDICATOR

The external modulation-level indicator warns the operator when the modulation signal is not set to 1V peak (± 2% typically). The external modulation signal is compared in the dual-comparator, U16, with internal references of 0.98 and 1.02V. Two status bits, MLEVLO and MLEVH1, are at the output of the 0.5 second dual one-shot, U17. If either of these reference voltages are exceeded, the two status bits are sensed by the Generator Controller that controls the 'EXT HI' and 'EXT LO' indicators in the MODULATION display field.

3-37. A1A2 Switch PCA

The A2A1 Switch PCA consists of a 6-by-8 matrix of open switch contact pads. All the front panel control keys, except the POWER ON/OFF switch, consist of an elastomeric membrane sandwiched between the A1A2 Switch PCA and the front panel sheet metal housing. When a key is pressed, a conductive pad on the back of the elastomeric membrane connects a set of contact pads. The Controller software senses what row and column of the matrix are connected when a key is pressed.

3-38. A2A1 Synthesizer PCA

The A2A1 Synthesizer PCA provides frequency control and modulation of the Signal Generator output. The A2A1 Synthesizer PCA is located on the top side of the module section. Together with the A2A2 VCO PCA and a 10-MHz reference frequency, the A2A1 Synthesizer PCA simultaneously generates a high-band signal that spans 490 to 1050 MHz and a mid-band signal that spans 245 to 512 MHz.

The high-band and mid-band signals are coupled to the A2A4 Output PCA. Here, heterodyning extends the Generator frequency coverage down to 0.01 MHz.

The A2A1 Synthesizer PCA consists of the following functional circuits that are described in the following paragraphs:

10-MHz Reference
Main PLL
FM Processing
800/40 MHz PLL
Sub-Synthesizer
Sub-Harmonic Reference

3-39. 10-MHZ REFERENCE

The Generator reference is the internal 10-MHz crystal oscillator. If Option -130 High-Stability Reference or Option -132 Medium-Stability Reference is installed, that oscillator is locked to the internal crystal oscillator. An external reference of 1, 2, 5, or 10 MHz can also be locked to this oscillator.

The internal 10-MHz crystal oscillator (XO) is a crystal, Y1, and an FET transistor, Q39. The frequency is adjusted by C240 and R230. The oscillator signal from Q39 is buffered by Q40, converted to TTL by U55-B, and sent to the sub-harmonic phase detector, U68, and the rear output through a 10-MHz band-pass filter, C247, L73. The 10-MHz reference is also sent to the 800/40-MHz loop-phase detector, the main loop-phase detector via divide-by-10, U58.

3-40. MAIN PHASE-LOCK LOOP

The main phase-lock loop (PLL) is a fractional divider PLL with a single-sideband mixer (SSB) in the feedback path. The oscillator for this loop is a separate assembly, the A2A2 VCO PCA. All the remaining PLL circuitry is on the A2A1 Synthesizer PCA.

The key signals to the main PLL are the 1-MHz reference signal from the 10-MHz reference circuit, the 245-MHz to 512-MHz signal from the binary divider, and the 20-kHz to 40-kHz signal from the sub-synthesizer circuit. The fractional division technique provides 20-kHz frequency resolution.

The SSB mixer, in conjunction with the sub-synthesizer, provides additional 5-Hz resolution at the Synthesizer frequency. This corresponds to 10-Hz resolution on the high band.

The main PLL consists of the VCO, the binary divider, the SSB mixer, the triple-modulus prescaler, the N-Divider, the phase detector, and the loop amplifier. All but the VCO are described in the following paragraphs. The VCO is discussed later in this section.

3-41. Binary Divider And Single-Sideband Mixer

The 490-MHz to 1050-MHz signal from the VCO via J107 is coupled to the binary divider, U1. Regulator Q1 provides +5V for the divider. One output of U1 is coupled to the A2A4 Output PCA through J104. The other output is amplified by Q2 and Q3. This signal is split into two quadrature (90*o* phase difference) signals by 3-dB coupler, U6.

This signal, and two other audio quadrature signals from U10, are summed in the double-balanced mixers U7 and U8 to produce two double-sideband suppressed-carrier signals. Because of the phase relationship of the outputs of the mixers, the summing of the two composite signals (in resistor network R21 and R22) results in the upper-sideband component being suppressed. The predominate remaining signal is the lower-sideband signal.

The lower-sideband signal, spanning 245 MHz to 512 MHz in 20-kHz steps, is amplified by U9 and applied to the N-Divider where it is divided down to 1 MHz.

3-42. N-Divider

The main components of the N-Divider are:

Triple-Modulus Prescaler (divide by 20/21/22) U18, U19, and U20
N-Divider Custom Gate Array U17

The triple-modulus prescaler, Figure 3-1, consists of a divide by 10/11 (U20), divide by 2 (U18A), synchronizing flip-flop (U18B), and quad NOR gates (U19). If all the inputs (E1, E2, E3, E4, and E5) to the 10/11 divider are low, the prescaler divides by 11, and the total division to the output (U20 pin 7) is 22. If any of the inputs are high, it divides by 10, and the total division is 20.

If inputs E1 and E3 are low, the modulus of the 10/11 divider is controlled by the output of the following divide by 2 (U18A). Consequently, the prescaler divides by 10 half the time and by 11 the other half, resulting in a divide by 21. U20 contains the ECL to TTL converter. U18B synchronizes the changing of the modulus with the clocking of the subsequent stages. The N-divider is clocked by the composite prescaler output U18A.

The operation of the triple-modulus prescaler is shown in Figure 3-1. The prescaler operates in conjunction with the N-divider gate array shown in Figure 3-2.

The N-Divider gate-array contains two 5-bit binary counters (A and N), a BCD two-decade rate multiplier, and latches to interface to the microprocessor. The operation of the N and A counters is as follows:

At the beginning of a count cycle, a number is loaded into the A and N counters. The A counter is not at its terminal count, so the output is high, and the mode line (MODE L) is low. This causes the prescaler to divide by 21 (or 22, TRMODL = low). The mode line stays low for 31-A counts, where A is the programmed number. The mode line goes high, and the prescaler divides by 20 (or 21, TRMODL = low) for 31-N counts.

The total division is:

$$(P+1)*(31-A) + P*((31-N)-(31-A)) \text{ or } P*(31-N) + (31-A)$$

On the 31st count, the counters are reinitialized. Figure 3-3 shows the timing for the A-counter programmed to 26, and the N-counter programmed to 18. Only the CKNL and MODE L signals shown in Figure 3-2 are accessible at U17, pin 6, and 22, respectively. Figure 3-3 show the N-Divider timing diagram.

The N-Divider gate array includes a two-decade rate multiplier that produces the fractional part of the division. It produces a pulse train with a programmed number of pulses for a 100-cycle frame of the 1-MHz N-divider output.

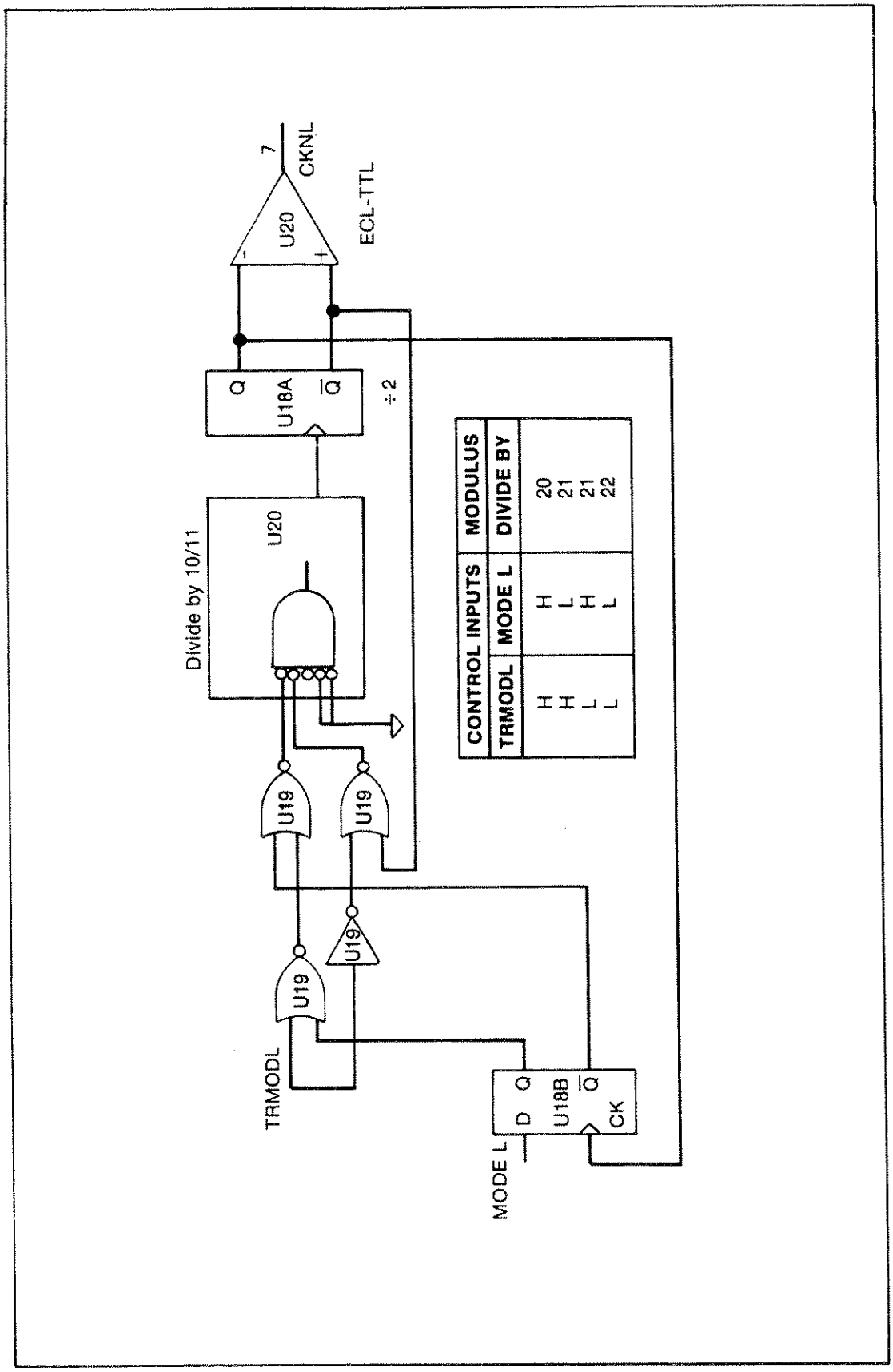

Figure 3-1. Triple-Modulus Prescaler Operation

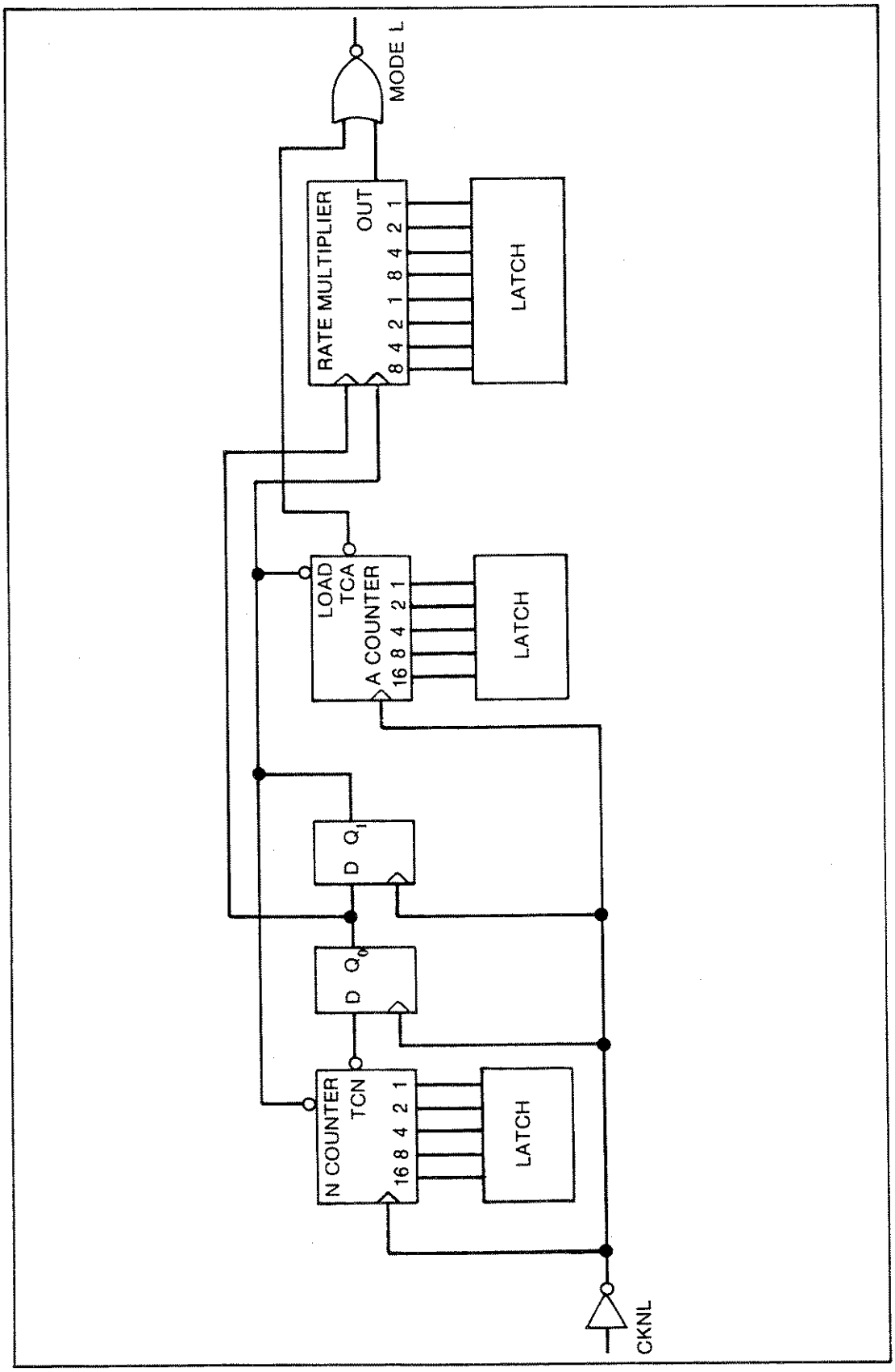

Figure 3-2. N-Divider Operation

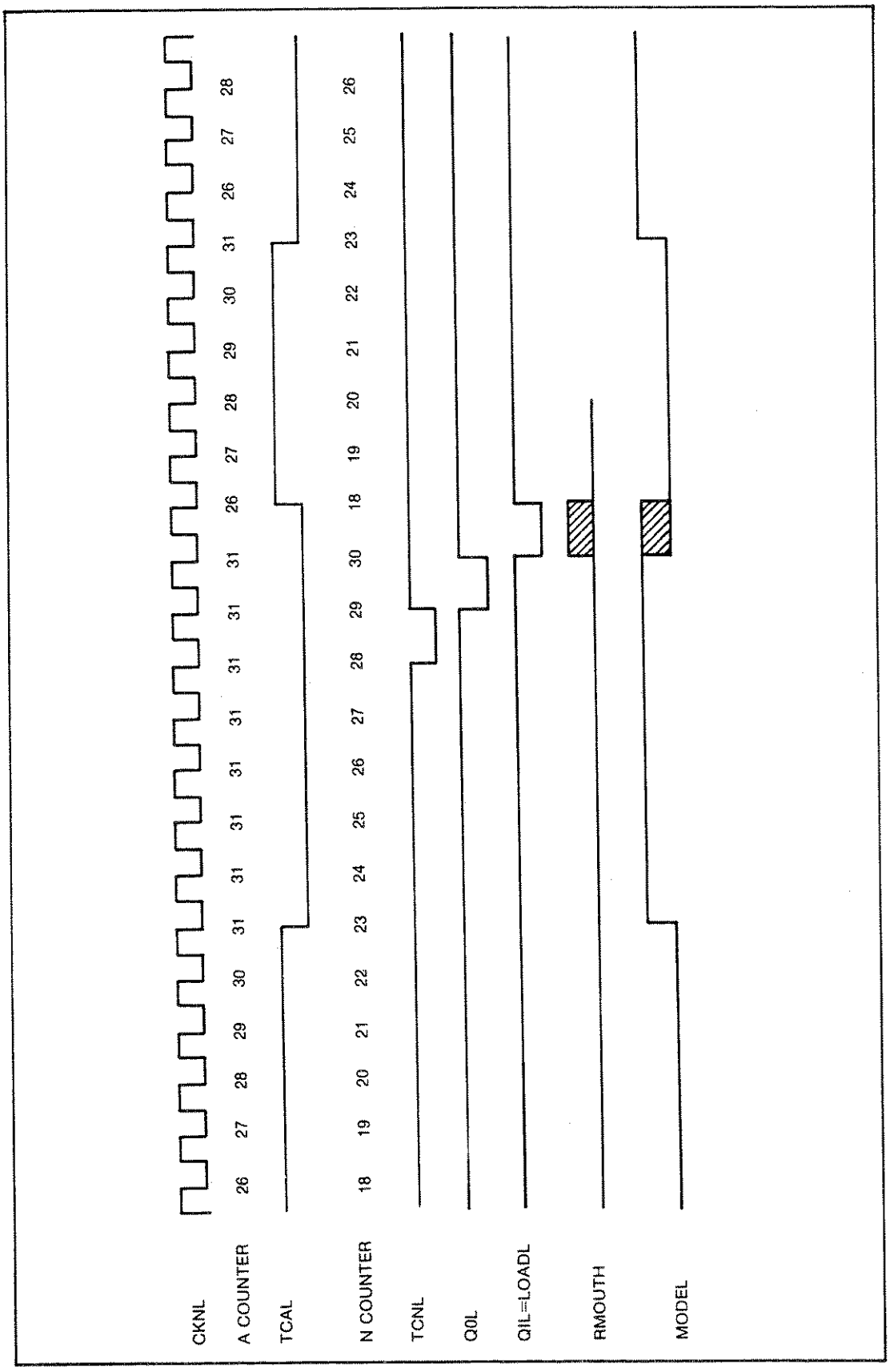
CKNL
A COUNTER
26 27 28 29 30 31 31 31

The programmed number ranges between zero and 98 in steps of two, corresponding to 20-kHz steps at the mid-band output frequency. The flip-flops in the rate multiplier get setup on count 29, and on count 30, a pulse may or may not be present depending on the programming of the rate multiplier. This is the shaded pulse in the timing diagram, Figure 3-3.

Irregularly spaced rate-multiplier pulses cause the mode line to go low, and the prescaler divides by P+1 at a rate equal to the rate multiplier programming. At a division of 255, the N and A counters are normally programmed to 15. This means the divider is always dividing by 21; consequently, there is no place to slip in the rate-multiplier pulses.

It might be noted that a 20/21 dual-modulus prescaler will not allow division from 245 to 525 without holes. For example 252 is 0 frames of 20 and 12 frames of 21. Consequently, there is no place to slip in the rate-multiplier pulses. It is not possible to divide by 253.

By using a triple-modulus prescaler, these problems are solved. Continuing with the previous example 252 is 12 frames of 21 and 0 frames of 22. The deleter functions by allowing the prescaler to divide by 22 at a rate equal to the rate-multiplier frequency. Number 253 is 11 frames of 21 and 1 frame of 22. A software algorithm determines whether to operate in the 20/21 mode (TRMODL =1) or 21/22 mode (TRMODL =0).

The frequency at the output of the N-divider gate array, is $(F_o - F_s - F_d)/N$; where F_o is the VCO output frequency, F_s is the sub-synthesizer frequency, and F_d is the fractional-division frequency.

3-43. Phase Detector

The 1-MHz reference signal from divide-by-10 U58, and the 1-MHz signal from the N-divider U17 are connected to a digital phase-frequency detector (U43, U44, U45). If the N-divider output is greater than the reference frequency, the level at TP38 is high. When the output of the level shifter Q16 is above ground, then CR12 is turned off. This allows current from Q19 to flow through CR13 into the integrator, decreasing the voltage at the integrator output, U48 Pin 6, which then lowers the frequency of the VCO until the reference and the N-divider output are the same frequency.

Similarly, if the N-divider output frequency is below the reference, TP39 is low, and the voltage at the output of level shifter Q17 is below ground, turning off CR15 and allowing current from R108 to flow through CR14 out of the integrator. This raises the voltage at the output of the integrator, which raises the VCO frequency. The phase-frequency detector is designed so that if the phase between the reference and N-Divider output slips more than two cycles in either direction, the corresponding phase-detector output is high or low. This provides twice the integrator current during acquisition as a conventional phase-frequency detector.

R107 provides a small bias current to the integrator to bias the phase detector at approximately 2.5 radians; consequently, the down-pump is normally always on. If the up-pump comes on, indicating an over-modulation condition, the pulses are detected by the one-shot, U47 that produces the UNLOK status that is then sensed by the Controller.

For flat FM response, it is necessary for the PLL bandwidth to be constant at all VCO frequencies. Two factors cause the loop bandwidth to change: the VCO tuning coefficient (Kv) and the divider ratio (N).

During calibration of the VCO, the Kv is measured at many frequencies across the band, and compensation data is stored in the VCO Calibration EPROM. The instrument

software uses this data along with N to control the PLL bandwidth in a compensating manner. The PLL bandwidth is controlled by changing the current to the down-pump via the KN DAC, U27, and the voltage-to-current converter, U46, Q18, and Q19.

3-44. Loop Amplifier

The loop amplifier-integrator consists of operational amplifier U48, C118 and R91. Capacitors C121 and C119 filter the 1-MHz reference. The output of the integrator is connected to a multi-pole LC filter (R92, C123, C99, C124, C126, C125, L49, L50, and R93) that attenuates the delete rate (20 and 40 kHz) and reference 1-MHz spurs.

Diodes CR9 and CR10 stabilize the loop during switching. The filter is buffered by the Darlington emitter-follower Q20, which is biased at 10 mA by Q21. Additional lead/lag compensation is provided by R99, R101, and C131. Proper termination for the filter is provided by R93 and Q22. The voltage for the loop amplifier is regulated to approximately +30V by Q15.

Amplifier U49 is a precision clamp to keep the VCO frequency above a minimum value for oscillation, and below a maximum above which the N-divider would not divide correctly. The photoisolator U50 detects when the clamp is active, indicating an out-of-lock condition. This signal is ORed with the signal from one-shot U47 and sent to the microprocessor as the UNLOK status.

3-45. FM PROCESSING

To provide FM accuracy, the FM signal FMV from the A2A4 Output PCA is first processed by the KV DAC (U28, and U29) to compensate for the VCO tuning coefficient. The KV DAC setting is proportional to 1/Kv, where Kv is the tuning coefficient. This correction is stored in the VCO Calibration EPROM on the Controller board. For output frequencies above 512 MHz and below 245 MHz, the KV DAC setting is halved to account for the effective frequency doubling that occurs on these bands.

Range switching is provided by resistors R77, R78, R79, and FETs Q10, Q11, and Q12. Comparator U42 converts TTL levels to 0V (on), and -15V (off) required by the FETs. U41C buffers the range switch, and in conjunction with R82, provides an overall FM adjustment. At this point, the audio signal splits into two paths. The path that connects to the integrator, U41A, is for modulation frequencies inside the loop bandwidth.

The path that sums with the VCO control voltage at P102 is for frequencies outside the loop bandwidth. U41D is an active high-pass filter that compensates for the non-ideal integrator and the ac coupling to the VCO tuning port.

The output of U41D is summed with the VCO control voltage via R88 and C117. FET Q13 allows the FM to be turned off. The audio signal is also processed by integrator U41A, R85, R86, and C115. The audio signal is ac coupled into the phase-detector integrator via R89, R90, C116, and FET Q14. (Resistor R90 adjusts the low frequency FM gain). This integrator makes the phase modulation produced at the Phase Detector appear as FM.

3-46. 800/40 MHz PLL

When the Signal Generator is operated in the low-band, the 800-MHz oscillator is locked to the 10-MHz Reference and provides a local oscillator for the heterodyne circuit on the A2A4 Output PCA. It also provides a 40-MHz signal to the sub-synthesizer clock generator.

The 800-MHz VCO is connected to the divide-by-four, U61, followed by a divide-by-five, U62 and U63, providing 40 MHz to the sub-synthesizer clock generator through selector U64. When the Signal Generator is not in the low-band, the 800-Hz oscillator and the first divide-by-four are disabled by turning off Q28 (HET).

The 40-MHz Oscillator consisting of U64, L66, and CR24, is selected by U64. The 40-MHz balanced ECL signal from U64 drives the two-phase clock generator. A self-biased gate, U65, converts ECL to TTL. U66 divides the 40-MHz signal by four to produce a 10-MHz signal that is compared against the 10-MHz reference in the phase detector U59 and U65.

Op-amp U60, resistor network Z9, and C181, C185, C186, and C201 integrate the phase detector pulses to produce a dc control voltage for the 800-MHz VCO and the 40-MHz VCO.

3-47. 800-MHz VCO

The 800-MHz VCO is a low noise, limited range, voltage-controlled oscillator for the 800-MHz PLL. The basic oscillator uses two active devices operating as negative resistance elements, coupled symmetrically to a resonator made up of two varactors and an adjustable capacitor. Each device is followed by an amplifier and isolation pad. This provides two coherent outputs of +5 dBm to the PLL and 0 dBm to the A2A4 Output PCA.

The oscillator transistors Q32 and Q35 are biased at 13 mA by R182 and R191. The voltage at the collectors of Q32 and Q35 is typically +2.5V. The two 6-dB amplifiers Q33 and Q37 are biased so that the voltage at their emitters is about +0.3V, and the voltage at their bases is about +1V with the collectors at +6.5V.

The PLL control voltage from U60 provides the tuning voltage for the dual varactors CR26 and CR27. The adjustable capacitor C206 is set to provide +16V on the varactor to optimize the VCO noise characteristic. The output attenuators consisting of R186, R187, R189, R197, R198, and R200 provide isolation for the outputs. The VCO signal is coupled to the output assembly A2A4 by a through-the-plate coaxial connector P108 at the 0 dBm level. The other VCO signal is connected to the divider U61 to provide the feedback for the PLL.

3-48. SUB-SYNTHESIZER

The sub-synthesizer consists of the clock generator, U34, 35, Q4, Q5, the gate-array, U33, the divide by 500, U15, and U16, and the low-pass filter L11 and L17. Internal to the sub-synthesizer gate-array, U33, are a divide-by-two, a 3½ decade-rate multiplier, and associated latches.

The balanced 40-MHz ECL clock signal is converted to TTL in Q4 and Q5, and converted to a two-phase 20-MHz clock in U34, U35.

The input frequency to the rate-multiplier is 20-MHz. The output frequency can be programmed from zero to 19.995 MHz in 5-kHz steps. This signal is ORed with the other phase of the 20-MHz clock to produce 20 MHz to 39.995 MHz at U33 pin 1. It is also divided by two for the output at U33 pin 23, by ten in U15, and again by 50 in U16 to produce 20 kHz to 39.995kHz in 5-Hz steps. This TTL signal at TP11 is filtered by L11, L17 and C41, C42, C48, C50, and C51. Op-amp, U10 forms an active quadrature generator, and the output pins 14 and 8 are offset by 90 degrees. These two signals are the 20-kHz to 40-kHz inputs for the Main PLL single-sideband mixer.

3-49. SUB-HARMONIC REFERENCE

Comparator U67 forms an ac-to-TTL converter. Diodes CR20 and CR21 precondition the REF IN signal to protect the comparator. Resistors R148, R149, R153, and R217 provide hysteresis, preventing oscillation when there is no input.

MOS switch U70 connects the control voltage of the 10-MHz crystal oscillator to a bias network R229, R230, and R231, or to the loop amplifier, thus closing a phase-locked loop.

The phase detector and loop amplifier are made up of U68, Q26, Q27, Q28, and U69. The signal from the external reference input through the ac-to-TTL converter or the enhanced stability options is applied to the flip-flop clock input, U68-3, via U54. The 10-MHz signal from the crystal oscillator goes to the other flip-flop clock input, U68-11. The flip-flops are connected, so the width of the pulse that switches Q38 is the difference in time of these two signals (U68-3 and U68-11). The phase-detector operating point is set by R223 and R224.

The output of the loop amplifier is applied as the control signal to the frequency control input of the 10-MHz crystal oscillator through the control switch U70. The control switch, U70, is controlled by the Generator Controller through the control line SHENL. This line is enabled when rear panel REF INT/EXT switch is set to EXT or when the enhanced stability options are present.

An out-of-lock detector is formed with one-shot U71. The out-of-lock detector provides a status output to the Controller that indicates the 10-MHz oscillator is not locked. An out-of-lock condition causes the loop amplifier to have a low-frequency beat note which triggers the one-shot to act as a pulse stretcher.

The output of the one-shot is an active-low signal and is combined through diode CR29 with other signals to form the UNLOK status signal.

3-50. A2A2 VCO PCA

The A2A2 VCO PCA is the heart of the main PLL. It produces the signal that is further processed to become the Signal Generator output. The A2A2 VCO PCA is located in a bottom side compartment of the module section.

The VCO tunes over a frequency range of 490 MHz to 1050 MHz in 4 bands, programmed by binary control signals Q and H/L, as follows:

Band	Frequency Range (MHz)	Q	H/L
L1	490 - 639.99999	0	0
L2	640 - 729.99999	1	0
H1	730 - 889.99999	1	1
H2	890 - 1050	0	1

The control voltage varies from about +2V to +16V in each of the four bands, and varies approximately linearly with frequency in each band. The A2A2 VCO PCA contains two oscillator circuits of similar design, but with different element values and transmission line lengths, to cover 490 MHz to 730 MHz (L bands oscillator) and 730 MHz to 1050 MHz (H bands oscillator).

Each oscillator uses a transistor (Q1, Q2) configured as a negative resistance device. The voltage at the collector of Q1 is about 7.2V at 1050 MHz, and the voltage at the collector

of Q2 is about 8.1V at 700 MHz. Each oscillator transistor is coupled loosely to a resonator that consists f a microstrip transmission line in series with a varactor diode (CR1,CR2) and a switchable value capacitor circuit (C3, C4, C7, C8, and associated components).

Each oscillator operates in two bands, selected by switching the capacitance value from varactor cathode to ground. For the H bands oscillator, C3 is selected for H2 band operation, while C3 in parallel with C4 is selected for H1 band. For the L bands oscillator, C7 is selected for L2 band operation, while C7 in parallel with C8 is selected for L1 band. The PLL control voltage from the A2A1 Synthesizer PCA at P102 provides the tuning voltage for varactor diodes CR1 and CR2.

The +13 dbm nominal signal from each oscillator is applied to a 12 db attenuator that provides isolation (R8-R10, R14-R16), and then to a low pass filter that attenuates harmonics to -15 dBc nominal (C16, C17, C24, C25). A PIN diode switch selects the signal from the ON oscillator, while the other oscillator is disabled by shorting the resonator to ground with a PIN diode switch (CR3, CR4, CR9, CR10). The signal is next applied to a signal splitter/attenuator that provides further isolation (R18, R19, R20, R23, R24).

One signal splitter output goes to 11 db amplifier U1. This amplifier provides further isolation and also boosts the signal to about +3dbm. The boosted signal is connected to the A2A4 Output PCA by a plug-in capacitor, A2C1. This capacitor allows either the A2A2 VCO PCA or the A2A4 Output PCA to be removed independently from the module section without the use of a soldering iron.

The other signal splitter output goes to series connected 11 db amplifiers U2 and U3. Two amplifiers are required for adequate isolation from the A2A1 Synthesizer PCA. The +3 dbm output signal from U3 is connected to the A2A1 Synthesizer PCA by a through-the-plate coaxial connector P104.

Amplifiers U1, U2, and U3 are biased at about +1.5V at their inputs, and +4.5V at their outputs.

The binary band control signals Q and H/L are connected from the A2A4 Output PCA to the A2A2 VCO PCA with a cable assembly W1 that plugs onto connector pins on the A2A4 Output PCA The control signals are level shifted by dual operational amplifier U4, which acts as a comparator.

3-51. A2A4 Output PCA

The A2A4 Output PCA accepts RF signals from the Synthesizer and the VCO circuits and command signals from the Controller. The output circuit provides a 0.01-MHz to 1050-MHz RF signal to the Attenuator.

The A2A4 Output PCA reduces harmonic distortion components in the RF signal, controls RF signal amplitude, introduces AM, and generates the low (heterodyne) frequency band 0.01 MHz to 245 MHz though mixing. It also generates a modulation signal to provide internal AM and FM, and provides a digital interconnect path between the Controller and Synthesizer.

3-52. RF PATH

The RF path begins with the two RF signals from the VCO and the Synthesizer PCAs. The SPDT bandswitch circuit selects between the 512-MHz to 1050-MHz signal at P106 and the 245-MHz to 512-MHz signal at P107. The selected signal is applied to buffer amplifier Q101 and Q102.

The 245-to 512-MHz signal directly generates the 245-to 512-MHz mid-band output signal. The 512-MHz to 1050-MHz signal generates the 512-MHz to 1050-MHz high-band output signal directly and the 0.01-MHz to 245-MHz low-band output signal by mixing with an 800-MHz LO signal.

The buffer amplifier Q101 and Q102 is a common-base, common-emitter cascade circuit with 7-dB gain. The three cascaded filter circuits that follow the buffer amplifier consist of combinations of discrete components and printed filters that suppress harmonics in the Generator RF output signal.

The first section of the circuit is a printed 1100-MHz low-pass filter. The second section is switched into the RF path via PIN diodes CR106 through CR110 by asserting MIDL when the Generator is operated in the mid-band (245 to 512 MHz). PIN diodes CR114 through CR116 select capacitors C119, C121, and C123 whenever HAOCTH is asserted to change the section cutoff frequency from 512 to 350 MHz. The third section provides harmonic filtering for the two higher bands, 512 MHz to 730 MHz, and 730 MHz to 1050 MHz. PIN diodes CR111 through CR113 select capacitors C112 through C114 to change the cutoff frequency from 1050 MHz to 730 MHz whenever HAOCTH is not asserted.

The amplitude modulator consists of PIN diodes CR117 through CR120 and associated components and follows the switchable filters in the signal path. The modulator is a voltage-controlled variable attenuator that provides AM and output level control. Modulator control voltage is determined by the leveling-loop circuitry. The leveling loop is described later in this section.

Q209, Q211, Q213, and associated components follow the modulator in the signal path and form a three-stage, 20-dB gain, 245-MHz to 1050-MHz amplifier. This amplifier drives a 3-dB power splitter that consists of resistors R253 through R255 and associated printed transmission lines.

One power splitter output drives the leveling-loop detector diode CR202. The other output goes to the HET band switch that includes PIN diodes CR203 through CR210 and biasing components. In the 245-MHz to 1050-MHz position, the signal passes through diodes CR204 through CR209 to the output amplifier Q215. This low-distortion output amplifier has 6-dB gain and output capability of 15 dBm.

For low-band operation (0.01 MHz to 245 MHz), the signal from the power splitter is routed through CR203 to an adjustable attenuator, R224 through R229, and then to the RF port of U201 (a double-balanced mixer). The signal frequency at the mixer RF port varies from 800.1 MHz to 1045 MHz. The 800-MHz local oscillator (LO) signal for the mixer comes from the A2A1 Synthesizer PCA through P108 and is amplified by Q207. This fixed-tuned amplifier has 13 dB of gain and provides a 10-dBm signal at the mixer LO port.

The mixer 0.01-MHz to 245-MHz output signal is passed through a diplexing low-pass filter (C219 through C230, R230, R231) that suppresses unwanted mixer spurious products while maintaining a 50-ohm load at the mixer IF port. The filtered IF signal is amplified by a three-stage IF amplifier Q202, Q204, Q206 and associated components.

The IF amplifier gain increases with frequency and is nominally 35 dB at 0.01 MHz and 37 dB at 245 MHz. This gain characteristic compensates for the increasing loss with frequency of the mixer and the diplexing low-pass filter. The output of the IF amplifier passes through a 245-MHz low-pass filter (C216, C217, C218 and printed inductors) and PIN diode CR210 to the output amplifier. The +15V power supply for the LO and IF

amplifiers is switched off by Q301 when the instrument is operating in the 245-MHz to 1050-MHz band to avoid introducing spurious products in the instrument output.

3-53. LEVELING LOOP

The leveling loop accepts the unleveled 245-MHz to 1050-MHz signal from the switchable low-pass filters and generates a leveled signal at the power splitter output that feeds the HET band switch. The leveled signal is proportional to the leveling loop control voltage that is generated by the level-control circuit. The signal amplitude at the other output of the power splitter is detected by a Schottky detector diode, CR202.

This diode generates a temperature-dependent dc voltage, which is a non-linear function of the applied RF voltage, so temperature compensation and linearization are necessary. The detector diode signal is low-pass filtered by L217 and C253, and is offset by the voltage across temperature-compensating diode CR126. Q104, Q105 and associated components form a current source circuit that provides bias current for CR126 and CR202.

The offset detector diode voltage at U101B pin 3 is linearized by amplifier U101B and its associated feedback components. Potentiometer R144 provides detector linearity adjustment. Thus, the voltage at U101B pin 1 is proportional to the RF voltage at detector diode CR202.

This voltage is divided and applied to the loop integrator amplifier at U101A pin 6. This amplifier drives the modulator through emitter follower Q103 and through the action of the ALC loop, maintaining the voltage level at U101A pin 6 equal to that on pin 5. Pin 5 voltage is a function of the leveling loop control voltage applied to R140. R140, R141, CR127, and CR128 form an additional detector linearizing network that is active for low RF levels. Amplitude modulation is achieved by summing an appropriately scaled modulation signal with the dc leveling loop control voltage applied to R140.

The amplitude modulator consists of PIN diodes CR117 through CR120, resistors R121, R122, and capacitors C137 and C138. Attenuation through the modulator is a function of bias current through the PIN diodes. This current is provided by the modulator linearizer circuit (R123 through R129, R148, R149, C139 through C143, and CR121).

Modulator attenuation is thus approximately proportional to the modulator control voltage at the emitter of Q103. Proportionality is required to maintain constant leveling loop bandwidth as modulator attenuation varies. Minimum attenuation is obtained with a modulator control voltage of 10V, while maximum attenuation is obtained with 0V.

Comparator U310A and associated components form an unleveled indicator circuit. The comparator senses the modulator control voltage at the emitter of Q103. This voltage is normally less than +11V, and the comparator output is high. If the modulator control voltage exceeds +11V, the modulator attenuation is at a minimum, and the leveling loop becomes inoperative (unleveled). This condition could be due to a fault or some abnormal operation such as over-modulation. In this case, the comparator output (UNLVLL) goes low. The Controller senses this low and causes the front panel 'UNCAL'indicator to flash and displays an unleveled status if interrogated.

3-54. LEVEL CONTROL

The instrument output level is set by the level-control circuit. Inputs to this audio signal processing circuit are the internal and external modulation signals, a dc reference voltage, and the digital control commands. The circuit output is the leveling loop control voltage that provides vernier level control of the Generator output. Digitally encoded level,

modulation depth, and temperature-compensation information are provided by the Controller.

Selection of the internal or external modulating signal, or no modulation, is made by analog switches U401C, U401D, and Op-amp U402B. The selected, buffered modulation signal at U402B pin 1 is applied to pin 4 of U301, a dual 8-bit DAC. U301, with U302D, acts as a digitally programmed variable attenuator and is labeled AM DAC.

Binary AM depth control information from the Controller is applied to DAC U301. The output at U302D pin 14 is the modulation signal scaled to the programmed AM depth. This ac signal is summed by op-amp U302B with a dc reference voltage provided by CR403. The output at U302B pin 7 is called the 1+AM signal. This signal provides the desired AM depth when scaled by the LVL DAC and applied to the leveling loop. AM depth adjustment is provided by potentiometer R421.

The instrument RF output amplitude is temperature compensated in a frequency-dependent manner as follows. The 1+AM signal is applied to pin 18 of dual 8-bit DAC U301, the DAC B reference input. The DAC output, at U405D pin 14, is the 1+AM signal attenuated by an RF frequency-dependent factor provided by the Controller using constants stored in the Generator firmware. This voltage is applied to a resistor/thermistor network that includes R303, R305, R306, and RT301.

The network output is the 1+AM signal attenuated by an RF frequency and temperature-dependent factor, and is applied to summing op-amp U302C. The 1+AM signal is also applied to this summing amplifier. Thus, the voltage at U302C pin 8 is the temperature-compensated and scaled 1+AM signal.

This signal is applied to the reference input of Level DAC U303. This 12-bit DAC, with op-amp U302A, latches U304, U305, controls the A2A4 Output PCA RF output amplitude. The DAC output voltage, at U302A pin 1, is the temperature-compensated 1+AM signal multiplied by a factor proportional to the 12-bit level control number provided by the Controller. This voltage is the leveling loop control voltage. The Generator RF output level adjustment is provided by potentiometer R311, and DAC offset voltage adjustment is provided by potentiometer R309.

3-55. MODULATION OSCILLATOR

The modulation oscillator generates a leveled sine wave of 400 Hz or 1 kHz and is the modulation source for the internal AM and FM functions. The oscillator is a level-controlled Wien-Bridge type and consists of op-amps U405A, U405B. Frequency is determined by the series RC time constant of the components between pins 5 and 7 of U405B and by the parallel RC time constant of the components from U405 pin 5 to ground. The modulation frequency control line, MF400L, originating at the latch U308, selects either 400-Hz or 1-kHz operation, and is selected by switching resistors with JFETs Q401 and Q403.

The amplitude of oscillation is controlled by an ALC loop that varies the resistance on U405B pin 6 to ground. This resistance comprised of R412 and the drain resistance of Q402, is nominally 2K ohms. The oscillator signal amplitude is sensed by rectifier CR401. The average current through CR401 is made equal to the reference current in R416 by integrator-amplifier U405A. Level adjustment is set by potentiometer R419. Temperature compensation is provided by R417, R418, and CR402.

3-56. FM DEVIATION CONTROL

The FM modulation signal source and deviation control circuits are on the Output assembly. Analog switches U401A, U401B, and op-amp U402A select the internal or

external modulating signal, or no modulation. The selected and buffered modulating signal at U402A pin 7 is applied to FM DAC U403. This DAC provides fine control of the FM deviation. (The coarse control FM circuitry is part of the Synthesizer assembly). The output of the DAC, at U405C pin 8, is the modulation signal multiplied by a factor proportional to the 8-bit FM deviation control provided by the Controller.

3-57. A2A5 Attenuator/RPP Assembly

The A2A5 Attenuator/RPP Assembly consists of A2A5A4 Attenuator/RPP PCA in a metal housing mounted on the top side of the module section to form a shielded enclosure. The A2A5A5 Relay Driver/RPP PCA is also included in this assembly.

The A2A5 Attenuator/RPP Assembly, controlled by the microprocessor, provides coarse control of the Signal Generator output level. The high-level signal from the A2A4 Output PCA is applied to the Attenuator which provides 0 dB to 138 dB of attenuation, in 6-dB steps, to this signal before it goes to the Generator RF OUTPUT connector.

Compensation data for the attenuator in each Generator is stored in the Attenuator calibration EPROM located on the A2A7 Controller PCA. The instrument program uses this data to correct for the combined deviations of the attenuator sections in use. For more details on level correction, refer to paragraph 3-13, Amplitude Control.

The A2A5 Attenuator/RPP Assembly provides an attenuation range from 0 dB to 138 dB in 6-dB steps and consists of seven independently cascaded 50-ohm attenuation sections, a 6-dB, a 12-dB, and five 24-dB sections. Each section consists of a DPDT relay and a three-resistor attenuator pad.

One relay position (when power is applied to the relay provides a straight path for the RF signal, and the other position (no power applied to the relay) inserts the attenuator pad into the RF signal path. All seven relays are inside individual shielded compartments in the Attenuator housing.

The control of the Attenuator relays is latched via U27, the open-collector drivers U30 and U31 on the A2A7 Controller PCA and transistor drivers on the A2A5A5 Relay Driver/RPP PCA. For calibration and troubleshooting purposes, special functions 83 through 86 allow the direct selection of four of the five 24-dB attenuators. The other 24-dB attenuator is selected by programming the appropriate level (-12 dBm).

Coupling capacitors C6 and C7 protect against dc or low-frequency power. The diode limiter, consisting of CR2 through CR9, provides protection against medium RF Power levels and short-term (fast acting) protection against high RF power levels. Long-term (latched) protection is provided by relay K8 whenever the reverse RF pwer exceeds a preset level.

RF power detected by CR1 is compared with the preset voltage in one section of comparator U1. When the detected voltage exceeds the set value, the output of U1 pin 1 goes positive, turning on Q1 and Q2. This actuates K8 to the protect position. In the protect position, the output connector is shorted to ground and the Generator output is disconnected from the output connector.

CR15 and R6 form a latching network such that K8 remains in the protect position until the Generator RF Output is reset by an RF ON entry. The output of the comparator is buffered and sent as RPTRPL to interrupt the Controller signal that annunciates the RPP trip condition by flashing the UNCAL and RF OFF indicators.

3-58. A2A7 Controller PCA

The A2A7 Controller PCA, under the direction of the instrument software, handles the data interface between the front panel, remote interface, and Generator functions. The A2A7 Controller PCA is located in a top side compartment of the module section.

The A2A7 Controller PCA consists of the following functional groups:

Microprocessor and its interface circuitry
Attenuator control interface
Front panel interface
IEEE-488 Interface
Memory ICs and addressing circuitry
Module I/O circuitry
Reset circuit
Status and control latches

3-59. MICROPROCESSOR

The heart of the A2A7 Controller PCA is U1, a TMS9995 16/8 bit microprocessor. The digital system clock signal is generated by an oscillator comprised of gates from U5 and crystal U41. When enabled, bidirectional buffer U4 provides additional drive current to the data bus operation; when it is disabled, it isolates the microprocessor from the system data bus. Buffers U33, U34, and U10 provide extra drive current to the microprocessor address and control signals.

3-60. ATTENUATOR CONTROL INTERFACE

The attenuator control signals are latched by U27. Darlington drivers U30 and U31 control the A2A5A5 Relay Driver/RPP PCA.

3-61. FRONT PANEL INTERFACE

Data is transferred to and from the front panel circuitry through tri-state bidirectional data buffer U18. This buffer is active when a front panel latch is addressed and the buffer control signal from U17 is low; otherwise, it is in the high-impedance state. The front panel latch select lines are decoded by U36. To reduce RF emissions from the Generator, low-pass filters comprised of the following components are used on the following signals:

SIGNALS	COMPONENTS
Signal CLRL	R6 and C51
Latch select SEG1L	R7 and C53
Latch select SEG2L	R8 and C54
Latch select SEG3L	R9 and C55
Latch select SEG9L	R10 and C56
Latch select DIGL	R11 and C57

In addition, capacitors C58 and C59 bypass the display filament supplies. LC filters comprised of L1 and C50, and L2 and C52 are used on the +5 volt and +37 volt supplies to the front panel circuitry.

3-62. IEEE-488 INTERFACE

Tri-state bidirectional buffer U2 buffers the data bus to the A3A3 IEEE-488 Interface Assembly. Address and control lines to the assembly are buffered by tri-state buffer U3. These buffers are in the high-impedance state when the assembly is not addressed.

The active low interrupt signal IEINTL from the A3A3 IEEE-488 Interface Assembly is connected to the level four interrupt on the microprocessor. R1 and C22 form a low-pass filter to suppress digital emissions from the Generator.

3-63. MEMORY

The microprocessor uses a 2K-byte RAM (U25) to store program variables. A 32K- and an 16K-byte EPROM (U21 and U22) contain the microprocessor instructions and constant data. Three 2K-byte Calibration EPROMs (U23, U24, U26) contain calibration data for the VCO, Output, and Attenuator/RPP assemblies, respectively. Decoders U20 and U14 decode the individual chip selects for the memory ICs.

3-64. MODULE I/O

Control data is transferred to the RF circuitry (located in the module section) through a byte wide unidirectional data bus. This data is retained on the RF circuit boards in latches. Select lines BSEL0L, BSEL1L, and address lines BAB2 through BAB0 are decoded into individual latch enables on the various RF circuit boards. Tri-state buffers U15 and U16 on the data and address lines provide extra drive current and allow these signals to float when inactive.

Flip-flop U42 gates the module I/O select pulse from U8 with the system clock to delay the leading edges of BSEL0L and BSEL1L to provide adequate latch setup times. D-flip-flop U9 latches address lines BAB2 through BAB0 to provide adequate latch hold times.

3-65. RESET

Comparator U7 and its associated circuitry generate the active low reset signal to the TMS9995. The reset signal is generated on power-up or if the +5V supply drops below +5V.

At power-up, R5 and C4 provide a slow-rising reset signal to the microprocessor, and the output of U7 is ignored. When the +5V supply is up, a reference voltage is set at U7 pin 2, the negative terminal. This reference voltage is one diode drop below the voltage at the positive terminal (pin 3). When power is lost, the voltage at the positive terminal falls below the reference voltage held by C3, and the output of U7 is immediately pulled low.

3-66. STATUS AND CONTROL

Tri-state buffers U11 and U40 read the three hardware fault detector status signals, UNLVL, UNLOKL and RPTRPL, the five option status signals HSOPTL, MSREFL, IEINL, LRFML, and ROPTL, and the status of the REF INT/EXT switch. Control and buffer enable signals are latched by U17.

3-67. A2A8 Non-Volatile Memory PCA

3-68. POWER CIRCUIT

There are two sources of power for the Non-Volatile Memory RAM IC. These are the battery and the regulated +5V Signal Generator supply. Diodes CR1 and CR2 form a basic diode switching circuit that allows the power source with the higher voltage to provide current to the CMOS RAM and isolate the other power source.

Q1 and Q4 are turned on by Q2 and Q3 when the +5V supply is above the threshold voltage set by VR1, R2, and R3. Q1 has a low collector saturation voltage. When it is turned on, the supply voltage to the CMOS RAM is very close to +5V. The output of Q4 is the power valid signal. The CMOS RAM cannot be accessed until the output of Q4 goes high.

3-69. MEMORY CONTROL

All address, data, and control lines to the CMOS RAM are buffered. The enable signals WEL, DBINL, and the CMOS RAM are buffered with open-collector gates. These signals are held at the same potential as the CMOS RAM supply when the +5V supply goes down, ensuring the CMOS RAM draws the minimum standby current.

3-70. A3A1 Power Supply PCA

The bridge rectifiers in the power supply are used in either a bridge or full-wave center-tapped configuration with capacitor input filters. Table 3-1 lists the rectifier configurations as well as the component designations for the various supplies.

Table 3-1. Power Supply Rectifier Configurations

SUPPLY	RECT.	CONFIG.	CAP	REGULATOR	REMARKS
+37	CR6	Bridge	C11	A3A1 U4	Adjustable
+15	CR2	CT/FW	C2	" U5	Fixed
+15	CR2	CT/FW	C2	" U1	Fixed
-15	CR2	CT/FW	C5	" U2	Fixed
+5	CR5	CT/FW	C8	A3 U3	Fixed
+18	CR1	Bridge	C1		Unregulated relay supply
FIL	6V ac with center-tap biased at 6.2V dc.				

The two +15V, the -15V, and the +5V supplies use conventional three-terminal IC regulators with internal current-limiting and temperature protection. All three 15V regulators have reverse voltage protection diodes CR3, 4, and 8.

The +37V regulator voltage is adjustable via R3. A 6.2V supply is developed from the +37V supply through resistor R4 and zener diode CR7 and is applied to the center tap of the 6V ac filament supply. This provides grid bias for the front panel displays. All regulators (except +37V) have their common reference terminals brought out to an external ground point on the module section to reduce power supply ripple (P2).

Triac U6 is a voltage surge protector to protect against line voltage surges as well as overvoltage in case of a wrong setting of the selector switch.

Switch S1 is the REF INT/EXT reference selection switch and is not functionally part of the power supply.

3-71. A3A3 IEEE-488 Interface Assembly

The A3A3 IEEE-488 Interface Assembly consists of the A3A3A1 IEEE-488 Interface PCA mounted in a metal frome on the Generator rear panel. It is interfaced directly with the A2A7 Controller PCA.

The A3A3 IEEE-488 Interface Assembly uses an NEC uPD7210 Talker/Listener IC (U1) to handle all the IEEE-488 standard communications protocol. All data, address, and control lines to the 7210 are buffered on the Controller. Two MC3447 bus drivers (U3 and U4) interface the 7210 directly to the IEEE-488 bus.

3-72. ADDRESS SWITCHES

Tri-state buffer U6 provides the status of the IEEE-488 rear panel adress switches when the Generator is interrogated. These switches determine the IEEE-488 bus address and talk-only (to) or listen-only (lo) modes. When opened, the switch just to the left of the IEEE-488 bus connector disconnects the bus shield ground from the system ground.

3-73. A5A1 Medium-Stability Reference PCA

NOTE

The Medium-Stability Reference does not have standby power nor is its oven kept warm during external reference operation. Therefore, each time the Medium-Stability Reference is selected, a warm-up time is required to meet specifications. The warm-up time is typically 5 to 10 minutes. A "Freq. Uncal" condition may be observed during this warmup period.

The A5A1 Medium-Stability Reference PCA consists of an ovened oscillator (Y1) and an ac-to-TTL converter. The A5A1 Medium-Stability Reference PCA is field repairable and is also available under the Module Exchange Program. The ovened oscillator (Y1) is not field repairable and is not described here.

The A5A1 Medium-Stability Reference PCA is mounted on the left side rail. The PCA is connected to the +5V power supply and to control signals via cable W25. The output is connected to the A2A1 Synthesizer PCA through cable W24.

Two NAND gates of U1 are used to convert the oscillator's ac-coupled output to a TTL signal. Another NAND gate of U1 and transistor Q1 control the power for the oven and oscillator circuit of Y1.

When the REF INT/EXT switch is set to EXT for external reference operation, the control line EXREFL is set low. This disables the oven and oscillator circuit of Y1 and also disables the ac-to-TTL converter to prevent it from oscillating spuriously.

Section 4
Maintenance

4-1. INTRODUCTION

This section of the manual presents warranty information and service methods. Performance test procedures are presented in Section 4A, access procedures in 4B, calibration adjustment procedures in Section 4C, and troubleshooting and repair information in Section 4D.

Each Signal Generator is warranted for a period of one year following delivery to the original purchaser. The warranty is located in front of Section 1 of this manual.

4-2. SERVICE METHODS

The Signal Generator is designed to be easily and economically serviced. You may return your instrument to Fluke for service, or you may service it yourself, and repair it, if necessary, by module replacement or component replacement.

4-3. Fluke Service

Fluke Service is probably the easiest for you. To ship a Signal Generator to the Fluke Technical Service Center nearest you, see Section 2 for shipping requirements and Section 7 for a list of repair centers. A cost estimate will be provided if you request one and if your instrument purchase date is beyond the warranty period.

4-4. Module Replacement

If your Generator develops a problem, see the Troubleshooting Section 4D for information on identifying the faulty module. With a modest amount of technical knowledge and test equipment, you can identify the faulty module and replace it using the Module Exchange Program. This method takes only a day or two to restore the Generator to proper working order. Very little or no calibration is required depending on the module replaced.

4-5. Parts Replacement

Parts replacement requires more equipment and service capability but usually offers the best economy and quickest turnaround. It involves part replacement at the customer's facility.

Most faults are detected by the built-in self tests or the UNCAL status circuits. By noting the self-test error code and interrogating the UNCAL status code, the service technician learns where the problem is. By applying normal signal tracing and troubleshooting procedures (see Troubleshooting in Section 4D of the manual), the fault can be quickly identified.

The faulty component is replaced, and then the instrument is recalibrated using Calibration Adjustments in Section 4C of this manual (if necessary). The Performance Tests explained in Section 4A of this manual are used to verify the Generator performance after repair or recalibration of the Generator.

Some assemblies have some non-field-replaceable parts. These parts, if replaced, would invalidate the calibration EPROM associated with that assembly. They are the Output (A2A4), the VCO (A2A2), and the Attenuator/RPP (A2A5) assemblies. Non-field-replaceable parts are listed in the appropriate parts lists at the bottom of that list.

In the event that a non-field-replaceable part is defective (about 10% of the parts are not field-replaceable), it is necessary for the module to be replaced using the Module Exchange Program in order to realize a complete recalibration of that module and its associated EPROM. Section 7 lists the national and international Sales Representatives and Service Centers.

Section 4A
Performance Tests

4A-1. INTRODUCTION

The information in the following paragraphs describes the performance tests for the key parameters of the Signal Generator, using the instrument specifications as the performance standard. These covers-on performance tests may be used as an acceptance test upon receipt of the instrument, as an indication that repair and/or calibration is required, or as a performance verification after completing repairs or calibration of the instrument. Individual performance tests can be used as troubleshooting aids.

The Signal Generator being tested (UUT) must be warmed up with all covers in place for at least 20 minutes before starting the performance tests.

Periodic calibration is recommended once a year.

4A-2. TEST EQUIPMENT

Table 4A-1 gives a list of the recommended test equipment for the performance tests, adjustment procedures, and for troubleshooting the Generator. Figure 4A-1 shows a Two-Turn Loop.

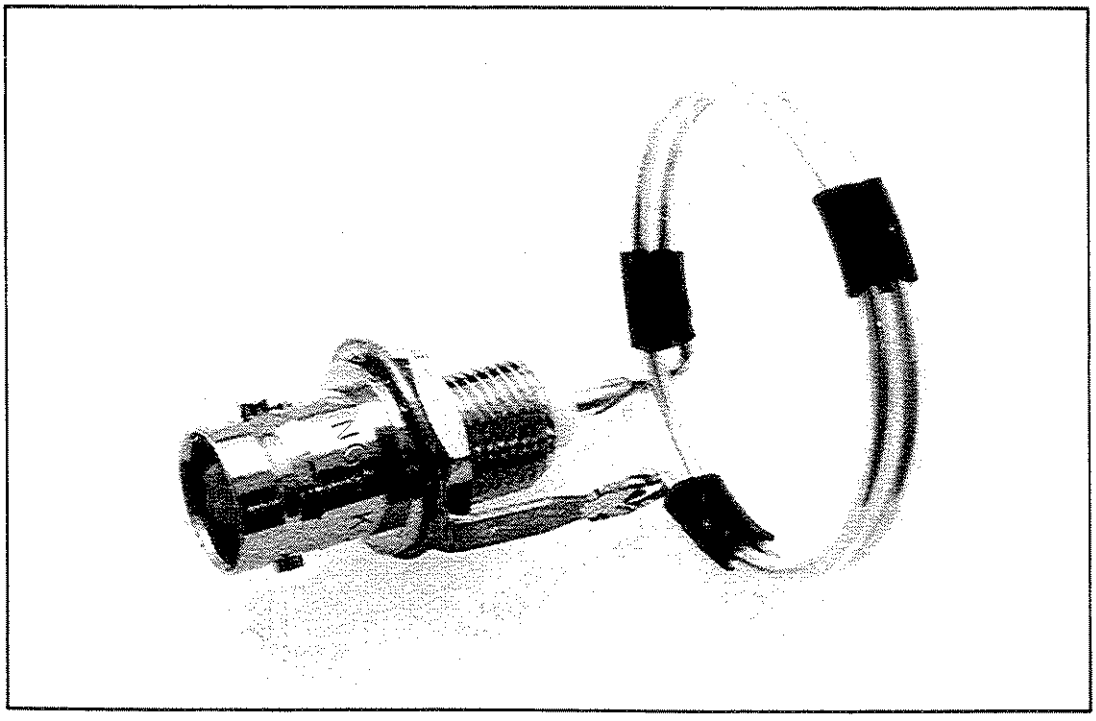

Figure 4A-1. Two-Turn Loop

Table 4A-1. Recommended Test Equipment

INSTRUMENT NAME	MINIMUM REQUIREMENT	MANUFACTURER DESIGNATION	NOTES TABLE 4A-1
DVM	5 1/2-Digit, 0.3% DC-20 kHz	JF 8842A-09	A,P,T
DMM	3 1/2-Digit, 1% DC and 1 KHz	JF 8020B	A,P,T
Wideband Amplifier	>25-dB gain, 0.4 to 1050 MHz NF <9 dB.	HP 8447D-010	P,4
RF-Spectrum Analyzer	0.1 to 1.5 GHz, 1-kHz BW	HP 8558B/182T	P,T
Oscilloscope	Four-trace 350 MHz, 5-mV/Div	TEK 2465A-11	T
FET Probe	DC-900 MHz	TEK 6201	T
RF Voltmeter	0.01 to 700 MHz, 0.01 to 3V ±10%	HI RF 801	T, 2
Frequency Counter	0.01-1050 MHz; 10 Hz res; 0.1V	JF 7220A	A,P,T
Modulation Analyzer	Input: 0.4 to 1050 MHz, 0 to +20 dBm AM: 10 to 90%, ±1%, FM: 0.1 to 100 kHz dev ±1%	HP 8901A	A,P,T,4
Distortion Analyzer	1 to 10% rng, ±1dB, 0.4 and 1 kHz	HP 339B	A,P,T,4
Power Meter	Instrumentation accuracy < ±1%	HP 435B	A,P,T,4
Sensor	-30 to 20 dBm; SWR < 1.2 for 0.4 to 1 MHz, < 1.1 for 1 to 1050 MHz	HP 8482A	4
Low-Level Sensor	-67 to -20 dBm; SWR < 1.4 for 10 to 30 MHz <1.15 for 30 to 1050 MHz	HP 8484A	4
Attenuator, 60 dB	0.4 to 1050 MHz SWR <1.1	Narda 777C	P,5,4
LF Synthesized Sig-Gen	10 Hz to 11 MHz, 10 Hz steps, Spurs and Harm < -50dB, 1V pk	JF 6011A	A,P
HF Synthesized Sig-Gen	10 MHz to 1050 MHz, 5 MHz steps	JF 6080A	P,T
Frequency Standard	House Standard, 10 MHz	----	A,P
Test Cable	Dual pin to BNC	JF 732891	A,T
Adapter, Coax	50-ohm, Type-N(m) to BNC(f)	JF Y9308	A,P,T
Adapter, Service	50-ohm, Module output to SMA	JF 744177	T
Two-Turn Loop	For Leakage test (See Figure 4A-1.)	Homebuilt	P,T,3
VSWR Bridge	10 MHz to 1000 MHz	Wiltron 62N50	P
Type-N Termination	50-ohm	JF Y9317	P
Coaxial Cable, 50 ohm	3 ft, BNC both ends	Y9111	A,P,T
Coaxial Cable, 50 ohm	6 ft, BNC both ends	Y9112	A,P,T
Screwdriver, electric	Set to 7 inch-pounds torque	Jergens-CL6500/CLT50	A,T
Power Supply, Variable	0 to 30V dc		T

Table 4A-1. Recommended Test Equipment (cont)

Notes

1. A = Adjustment; P = Performance Test; T = Troubleshooting.
2. Helper Instruments.
3. Two-Turn, 1-inch diameter loop made of £18 enamel wire soldered to a BNC connector. Figure 4A-1 shows a two-turn loop.
4. The HP8902A/11722A Measuring Receiver may be used in place of the wideband amplifier, 60-dB Attenuator, HP8901A, HP339B, and the HP435B/8482A/8484A for the alternate performance test.
5. VSWR verified and actual attenuation calibrated to ±0.2 dB by the operator at application frequencies.

4A-3. POWER-ON TEST

This performance test is the built-in self test that performs a simple functional check of the instrument.

REQUIREMENT

The Generator successfully passes the self test.

REMARKS

The test is begun each time the Generator is turned on. Press any of the FUNCTION keys or the [CLR/LCL] key to abort the test.

PROCEDURE

1. Start the test with the power off.
2. Press the POWER on. The Generator automatically starts the self tests, which include lighting all indicators and every segment of the display. This test takes five seconds.

If the instrument fails any of the self tests, the results are shown in the four display fields. See the paragraphs on Self Test Description located in Section 4D for the interpretation of the test failure codes.

If the Generator passes the self test, it is automatically returned to the same front panel condition that existed prior to power-on. The IEEE-488 Interface is programmed to local control.

4A-4. FREQUENCY ACCURACY TEST

The internal timebase is compared to that of a Frequency Standard.

REQUIREMENTS

The frequency of the UUT timebase is within the specified limits.

TEST EQUIPMENT

Frequency Standard
Frequency Counter

REMARKS

This procedure is for a UUT with a standard timebase. If the UUT has the optional timebases installed (Option -130 or -132), use the procedure in Section 6 to verify that the optional timebase frequency is within the specified limits.

PROCEDURE

a. Connect the Frequency Standard output to the 10 MHz REF IN connector on the Frequency Counter and switch the Counter to Ext. Ref.

b. Switch the UUT to internal reference.

c. Connect the UUT REF OUT connector to the Frequency Counter CHANNEL A input connector.

d. Verify that the counter display is 10 MHz ±25 Hz.

4A-4A. SYNTHESIS TEST

REQUIREMENT

The Generator's measured and programmed frequencies agree within ± one count.

TEST EQUIPMENT

Frequency Counter

REMARKS

Failing this test indicates the need to repair and/or recalibrate the A2A1 Synthesizer PCA (A2A1) and/or the VCO PCA (A2A2).

PROCEDURE

a. Connect the UUT 10 MHz OUT to the Frequency Counter 10-MHz reference input, and connect the UUT RF OUTPUT to the Counter input.

b. Set the UUT REF INT/EXT Switch to INT,and the counter REF INT/EXT switch to EXT.

c. Set the counter to read 10 Hz resolution.

d. Program the UUT to [RCL] [9][8].

e. Program the UUT frequency to 111.11111 MHz.

f. Program the UUT frequency step to 111.11111 MHz.

g. As the frequency is stepped from 111.11111 MHz, 222.22222 MHz, etc., to 999.99999 MHz, verify that the Counter reading agrees with the UUT frequency ± one count.

4A-5. HIGH-LEVEL ACCURACY TEST

The output power is measured using a Power Meter at various frequencies. First, the step attenuator is set for zero attenuation; then each attenuator section is individually programmed. Finally, the output level accuracy and attenuator section errors are computed.

If a Measuring Receiver is available for level testing, then proceed directly to the Alternate-Level Accuracy Test procedure.

REQUIREMENT

The output level accuracy, the attenuator section errors, and the sum of the attenuator section errors at each test frequency are less than ± 1.0 dB, frequency > 0.4MHz.

TEST EQUIPMENT

Power Meter with a Sensor

REMARKS

Failing this performance test indicates the need to repair and/or replace the A2A4 Output PCA and/or the A2A5 Attenuator/RPP Assembly. To determine which assembly is at fault, use Section 4D in this manual for Troubleshooting procedures.

The test frequencies of this procedure provide reasonable confidence of the amplitude accuracy of the UUT. However, additional test frequencies may be included in this test.

This test verifies the high-level accuracy of the Generator and also verifies that the amplitude correction factors for the individual Attenuator sections are correct. This test, in conjunction with the mid-level accuracy and low-level accuracy tests, verifies the overall level performance of the UUT.

PROCEDURE

a. Calibrate and zero the Power Meter.

b. Program the UUT to [RCL] [9][8].

c. Connect the Power Sensor to the UUT RF OUTPUT.

d. Program the UUT frequency to 0.4 MHz.

e. Select each attenuator section by programming the UUT amplitude to the levels shown in Figure 4A-2 High-Level Accuracy test conditions, and record the measured power at each level.

NOTE

To test Attenuator sections 4 through 7, program the Signal Generator to -12 dBm, and key in [SPCL] [8][3] through [8][6], respectively.

f. For each programmed level of Figure 4A-2, compute the output power error (subtract the programmed power in dBm from the measured power in dBm). These errors must not exceed ± 1.0 dB.

g. For attenuator sections 1 through 7, subtract the measured power for section zero from the sum of the measured power for that section and the nominal attenuation for that section, e.g., (-M0+M1+6) for section 1. The eight section errors and their sum must not exceed ± 1.0 dB.

Figure 4A-2 shows the parameters of the high-level accuracy test.

		OUTPUT POWER				
ATTENUATION		PROGRAM	MEASURED	ERROR (dB)	SECTION ERROR (dB)	LIMIT (dB)
SECTION	NOMINAL	(dBm)	(dBm)			
0	0	+12	M0	M0–12	M0–12	±1.0
1	6	+ 6	M1	M1–6	–M0+M1+6	"
2	12	0	M2	M2–0	–M0+M2+12	"
3	24	-12	M3	M3+12	–M0+M3+24	"
4	24	-12 [SPCL] [8][3]	M4	M4+12	–M0+M4+24	"
5	24	-12 [SPCL] [8][4]	M5	M5+12	–M0+M5+24	"
6	24	-12 [SPCL] [8][5]	M6	M6+12	–M0+M6+24	"
7	24	-12 [SPCL] [8][6]	M7	M7+12	–M0+M7+24	"
					Sum of Errors	"

Figure 4A-2. High-Level Accuracy Test Conditions

h. Repeat steps d through g with the UUT programmed to each of the following frequencies:

120 MHz, 244 MHz, 245 MHz, 850, and 1050 MHz.

To illustrate the procedure, Figure 4A-3 is an example in which the measured power and the error calculations are shown. This example is for one frequency, and these measurements and calculations are repeated at other frequencies. In this case, the section errors and the sum of the section errors are within the test limits and, therefore, the unit passed.

4A-6. MID-LEVEL ACCURACY TEST

The level accuracy is verified, from –24 to –66 dBm at frequencies of 120, 244, 245, 850, and 1050 MHz, using the Power Meter with a Low-Level Sensor.

ATTENUATION		OUTPUT POWER		ERROR (dB)	SECTION ERROR (dB)	LIMIT (dB)
SECTION	NOMINAL	PROGRAM (dBm)	MEASURED (dBm)			
0	0	+12	+12.2	+0.2	+12.2-12.0	= +0.2
1	6	+ 6	+05.9	-0.1	-12.2+5.9+6	= +0.3
2	12	0	-00.2	-0.2	-12.2-0.2+12	= -0.4
3	24	-12	-12.1	-0.1	-12.2-12.1+24	= -0.3
4	24	-12 [SPCL][8][3]	-11.8	+0.2	-12.2-11.8+24	= +0.0
5	24	-12 [SPCL][8][4]	-12.0	+0.0	-12.2-12.0+24	= -0.2
6	24	-12 [SPCL][8][5]	-12.3	-0.3	-12.2-12.3+24	= -0.5
7	24	-12 [SPCL][8][6]	-11.9	+0.1	-12.2-11.9+24	= -0.1
					Sum of Errors	= -1.0

Figure 4A-3. Example of High-Level Accuracy Test Conditions

REQUIREMENT

Amplitude accuracy is ±1.0 dB from +13 to -127dBm.

TEST EQUIPMENT

Power Meter with a Low-Level Sensor

REMARKS

This test, in conjunction with the High-Level Accuracy Test and the Low-Level Accuracy Test, verifies the overall level performance of the UUT.

It is convenient to use the UUT RF ON/OFF control when zeroing the Power Meter.

PROCEDURE

a. Program the UUT to the Instrument Preset State [RCL] [9][8], and then program 30 MHz and -24 dBm.

b. Calibrate the Power Meter.

c. Connect the Power Meter with a Low-Level Sensor to the UUT RF OUTPUT.

d. Zero the Power Meter.

e. With the Power Meter, measure the UUT output power (in dBm). It should agree with the programmed level within ± 1.0 dB.

f. Repeat steps e and f for levels of -30, -36, -42, -48, -54, -60, and -66 dBm.

g. Repeat steps d to g for frequencies of 244, 245, 850, and 1050 MHz.

4A-7. LOW-LEVEL ACCURACY TEST

The Power Meter with a Low-Level Sensor and the calibrated 60-dB Attenuator are used to verify the UUT level accuracy at –127 dBm and at frequencies of 120, 244, 245, 850, and 1050 MHz, by using the Spectrum Analyzer as an indicator.

REQUIREMENT

Amplitude accuracy is ±1.0 dB from +13 to -127 dBm.

TEST EQUIPMENT

Wideband Amplifier
60-dB Attenuator
RF Spectrum Analyzer
Power Meter with a Low-Level Sensor

REMARKS

This test, in conjunction with the Mid-Level Accuracy and High-Level Accuracy Test, verifies the overall level performance of the UUT.

Failing this test, but passing the High-Level Accuracy Test, probably indicates a leak-around problem in the UUT attenuator. Service tip:

Check for a broken feed-through filter or improper mechanical assembly, i.e., loose screws and/or damaged or misplaced gaskets.

It is convenient to use the UUT RF ON/OFF control when zeroing the Power Meter.

PROCEDURE

a. Program the UUT to the Instrument Preset State [RCL][9][8], then program 30 MHz and –67 dBm.

b. Calibrate and then connect the Power Meter with a Low-Level Sensor to the UUT RF OUTPUT.

c. Program the UUT to –67 dBm.

d. Zero the Power Meter.

e. With the Power Meter, measure the UUT output power (in dBm) and record the measurement as the variable P.

f. Connect UUT RF OUTPUT through the 60-dB Attenuator and the Wideband Amplifier to the input of the RF Spectrum Analyzer. Use well shielded cables to avoid leakage that could affect the measurement.

g. Adjust the Analyzer to display the signal, using a resolution bandwidth of 1 kHz and a vertical display of 1 dB/Div. Adjust the reference level so that the response is at a convenient reference point on the display, e.g., 2 dB below top scale. This signal response corresponds to a level of (P-A) dBm, where A is the value of the 60 dB Attenuator.

h. Program the UUT to a level of -127 dBm, remove the 60-dB Attenuator, and note the difference in the resulting response on the Spectrum Analyzer from the previous response (P-A). The actual UUT output level is (P-A) plus this difference and should agree with the programmed level to within ± 1.0 dB.

i. Repeat steps c through h for frequencies of 244, 245, 850, and 1050 MHz.

4A-8. ALTERNATE-LEVEL ACCURACY TEST

A Measuring Receiver is used to verify the UUT level accuracy at various amplitude and frequency settings that test all level ranges of the UUT on all RF bands.

REQUIREMENTS

Amplitude accuracy is:

< ±1 dB from 0.4 to 1049.99999 MHz, from +13 to -127 dBm.
< below 0.4 MHz, ± 2 dB at or above -100 dBm.
< below 0.4 MHz, ± 3 dB below -100 dBm.

TEST EQUIPMENT

Measuring Receiver Sensor Module

REMARKS

This test is a more comprehensive test then the High-Level, Mid-Level, and Low-Level Accuracy tests.

Failing this test at levels above approximately -50 dBm, indicates the need to repair or replace the A2A4 Output PCA, or the A2A5 Attenuator/RPP Assembly.

Failing this test at lower levels probably indicates an RF-leakage problem with the A2A5 Attenuator/RPP Assembly. Check for loose connectors, loose screws, improper gasketing or a broken feed-through filter.

Because of operational subtleties in Measurement Receivers and the intent to reduce the risk of measurement errors, the following procedure is written around the use of the H.P. 8902A as the Receiver.

NOTE

The calibration factors for the Sensor Module must be stored into the Measurement Receiver's Cal Factor Table prior to performing calibrated RF power measurements. Correctly entered Cal Factors can be verified on the H.P. 8902A by using special functions 37.5 and 37.6 (refer to owners manual).

PROCEDURE

1. Level Measurements

   a. Perform the Power Meter "zero" and "self-calibration" for the Measurement Receiver (refer to owner's manual).

   b. Connect all instruments as shown in Figure 4A-4.

   c. Program the UUT to [RCL][9][8], 10 MHz, +13 dBm, and [AMPL][STEP]6.1 dB.

   d. Program the Measurement Receiver to RF-POWER mode and toggle the [LOG/LIN] button to display dBm. To enable the correct cal factor selection, tune the internal L.O. on the Measurement Receiver to that of the UUT RF output ([1][0][MHz] for the first frequency).

   e. Step the UUT level from +13 dBm to -11.4 dBm using the STEP [ ] key. Verify that each level measured with the Measuring Receiver agrees with the UUT programmed level and is within ±1 dB.

   f. Select TUNED-RF LEVEL on the Measuring Receiver, wait for a displayed reading, and then press the CALIBRATE button. Verify that the Recal annunciator goes out and a stable reading is displayed again.

   g. Step the UUT from -11.4 to -127.3 dBm, again observing that each stepped level is within ±1 dB.

NOTE

When the Recal annunciator on the Measurement Receiver lights while stepping through UUT levels, press the CALIBRATE button on the Measuring Receiver and wait for a stable reading.

   h. Repeat steps d through g for each of the following UUT frequencies:

      120, 244, 245, 380, 511, 850, and 1049 MHz

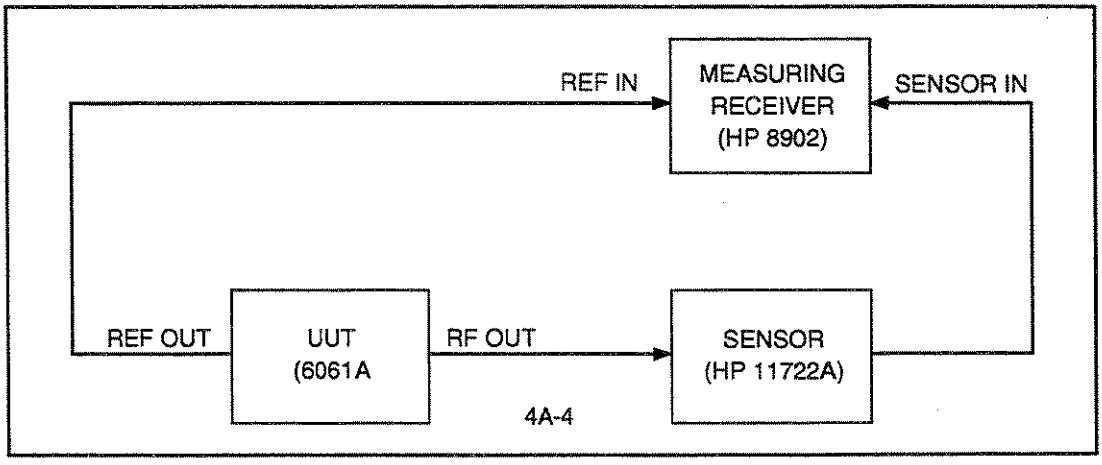

Figure 4A-4. Alternate-Level Accuracy Equipment Setup

4A-9. OUTPUT LEAKAGE TEST

The output signal leakage is verified with a two-turn loop by measuring the induced signal with a spectrum analyzer and comparing it to a 1 μV reference established at each frequency from the UUT.

REQUIREMENT

The radiated emissions induce less than 1 μV of the Generator's output signal into a 1-inch diameter, two-turn loop, 1 inch away from any surface of the Generator as measured into a 50-ohm receiver.

TEST EQUIPMENT

Wideband Amplifier
RF Spectrum Analyzer
Two-Turn Loop
Type-N Termination
A screen room may be required depending on the RF environment.

REMARKS

Failing this test probably indicates a broken feed-through filter or improper mechanical assembly, i.e.; loose screws and/or damaged or misplaced gaskets.

PROCEDURE

a. Connect the UUT RF OUTPUT to the Wideband Amplifier input, and connect the Amplifier output to the Spectrum Analyzer input. Use well shielded cables to avoid leakage which could affect the measurement.

b. Program the UUT to the Instrument Preset State, [RCL] [9][8].

c. Program the UUT to -107 dBm.

d. Adjust the Spectrum Analyzer to display the UUT signal for a convenient reference, using a vertical scale of 10 dB/division, a resolution bandwidth of 3 kHz, and a span/division of 5 kHz/division.

e. Disconnect the Amplifier from UUT and terminate UUT OUTPUT with type-N Termination.

f. Connect the two-turn loop to the Amplifier input.

g. Program the UUT to +13 dBm.

h. Verify that the leakage is less than -107dBm (1 μV), as indicated by the Spectrum Analyzer by moving the two-turn loop over the UUT surface at a distance of 1 inch.

i. Repeat steps c through h at 550, 850, and 1050 MHz.

4A-10. ALTERNATE OUTPUT LEAKAGE TEST

RF leakage is verified by measuring the induced signal in a two-turn loop with the Measuring Receiver.

REQUIREMENTS

The output signal leakage must induce less than 1 μV into a 1-inch diameter two-turn loop, 1 inch away from any surface of the generator as measured into a 50-ohm receiver.

TEST EQUIPMENT

Measuring Receiver
Two-Turn Loop
Type-N Termination
A screen room may be required depending on the RF environment.

REMARKS

This test is an alternative to the Output Leakage test.

Failing this test indicates a problem feed-through filter or improper mechanical assembly, i.e., loose screws, and/or damaged or misplaced gaskets.

The Measuring Receiver is used to measure the UUT leakage relative to a 1 μV reference established at each frequency.

PROCEDURE

a. Connect the UUT 10 MHz OUT to the 10-MHz timebase input of the Measuring Receiver.

b. Set the UUT REF INT/EXT switch to INT.

c. Program the UUT to the Instrument Preset State, [RCL] [98].

d. Program the UUT to -107 dBm.

e. Connect the Measuring Receiver sensor to the UUT RF OUTPUT.

f. Set the Measuring Receiver to make relative level measurements to the -107 dBm signal applied.

g. Disconnect the sensor from the UUT, and terminate the UUT RF OUTPUT with the Type-N Termination.

h. Connect the two-turn loop to the Measuring Receiver sensor.

i. Program the UUT to +13 dBm.

j. Verify the instrument leakage is less than -107 dBm (1 μV) as indicated by the Measuring Receiver by moving the Two-Turn Loop over the UUT surface at a distance of one inch from the UUT.

k. Repeat steps d through j at 550 MHz, 850 MHz, and 1050 MHz.

4A-11. HARMONIC AND SPURIOUS TEST

Using a spectrum Analyzer, the level of the harmonic and spurious signals are compared to the desired signal at various programmed frequencies.

REQUIREMENTS

RF harmonics <-30 dBc; spurious (non-harmonic) <-60 dBc for offsets >10 kHz, frequency > 0.1MHz.

TEST EQUIPMENT

RF Spectrum Analyzer

PROCEDURE

a. Connect the UUT RF OUTPUT to the Spectrum Analyzer input.

b. Program the UUT to [RCL] [9][8]. Then program the Generator to +13 dBm.

c. Program the UUT to 0.4 MHz.

d. Set the Spectrum Analyzer controls to display the UUT output signal and its harmonics (at least three harmonics wherever possible). Be careful not to overload the Analyzer input. Overloading the Analyzer causes it to generate harmonics, thus invalidating the test.

e. Verify that all the harmonics are more than 30 dB below the fundamental signal.

f. Repeat steps c through e for UUT frequencies of 50 MHz, 240 MHz, 300 MHz, 500 MHz, and 750 MHz.

g. Program the UUT to 185 MHz.

h. Verify the spur at 245 MHz is < -60 dBc.

i. Program the UUT to 244 MHz.

j. Verify the spur at 312 MHz is < -60 dBc.

k. Program the UUT to 244.99 MHz, 0 dBm.

l. Set the Spectrum Analyzer controls for the appropriate reference level, center frequency, span, and resolution to display the UUT signals and spurs frequencies with appropriate noise floor and signal resolution for the following steps.

   1. Verify the spurs at the offsets of 20 kHz, 30 kHz, 35 kHz, and 40 kHz are < -60 dBc.
   2. Verify the spurs at the offsets of 1 MHz and 10 MHz are < -60 dBc.
   3. Program the UUT level to 1 dBm with the EXT AM on at 30% modulation (no external modulation input is applied).
   4. Verify the spurs at 10 MHz, 20 MHz, and 30 MHz are < -60 dBc.
   5. Verify the spurs at 800 MHz, and 1044.99 MHz are < -60 dBc.
   6. Program the UUT to 600 MHz, 0 dBm, EXT AM modulation off.
   7. Verify the spur at 300 MHz is < -60 dBc.

4A-12. MODULATION TESTS

These tests use the Modulation Analyzer to verify modulation accuracy and residual and incidental modulation of the UUT. The modulation distortion is verified by measuring the demodulated output of the Modulation Analyzer with a Distortion Analyzer. The internal modulation oscillator frequency is measured using the Frequency Counter on the demodulated output of the Modulation Analyzer. Table 4A-2 lists the requirements for the modulation tests.

REMARKS

Failing this performance test indicates the need for repair and/or recalibration of the associated circuitry.

Where residual noise affects the Modulation Analyzer measurements accuracy, apply correction methods provided by the Modulation Analyzer manufacturer.

The UUT settings in this procedure are chosen to provide a strong confidence of the modulation performance of the UUT throughout its range. However, performance also may be checked at other instrument settings if desired.

TEST EQUIPMENT

Modulation Analyzer
Distortion Analyzer
Frequency Counter
Low-Frequency Synthesized Signal Generator (LFSSG)
DVM
HFSSG-JF 6080A

Table 4A-2. Modulation Test Requirements

REQUIREMENTS PARAMETER	SPECIFICATION
MOD FREQ	≤±3% at 0.4 or 1 kHZ for 20 to 30°C; add ±0.1%/5°C outside this range.
AM ACCURACY	≤±(2% + 4% of setting) for internal rates and depths of 90% or less, and peak amplitudes of +13 dBm or less.
AM DISTORTION	<1.5% THD up to 30% AM <3% to 70%, <5% to 90%, at internal rates; except for frequencies >950 MHz at levels >8dBm, then <3% to 70% AM, <5% to 90% AM.
RESIDUAL AM	<0.1% rms (–60 dBc) in a 0.05-kHz to 15-kHz bandwidth.
INCIDENTAL FM	<0.3 fm for internal rates and <30% AM.
FM ACCURACY	≤±7% for rates of 0.3 kHz to 20 kHz, and >100 Hz deviation, at frequencies >0.4 MHz.
FM DISTORTION	<1% THD for rates of 0.3 kHz to 20 kHz, and >100 Hz deviation, at frequencies >0.4 MHz.
RESIDUAL FM	rms in 0.3-kHz to 3-kHz Band: 6061A: <6 Hz for 245 MHz to 511.99999 and <12 Hz elsewhere. 6060B: <10 Hz for 245 MHz to 511.99999 and <20 Hz elsewhere. rms in 0.05-kHz to 15-kHz Band: 6061A: <9 Hz for 245 MHz to 511.99999 and <18 Hz elsewhere. 6060B: <22 Hz for 245 MHz to 511.99999 and <40 Hz elsewhere.
INCIDENTAL AM	<1% AM at 1-kHz rate and for deviation <50 kHz.

PROCEDURE

1. Internal Modulation Oscillator Frequency Test

   a. Connect the UUT RF OUTPUT to the Modulation Analyzer input.

   b. Connect the Modulation Analyzer modulation output to the Frequency Counter input.

   c. Program the Modulation Analyzer to measure AM depth in a 0.05-kHz to 15-kHz bandwidth.

   d. Program the UUT to [RCL] [9][8]. Program the UUT for 90% INT AM at a 1-kHz rate and a level of +1 dBm.

   e. Verify that the Counter reads between 970 and 1030 kHz.

   f. Program that the UUT to a modulation frequency of 400 Hz.

   g. Verify the Counter reads between 388 Hz and 412 Hz.

2. Internal AM Accuracy Test

   a. Measure the mean AM depth, (+PEAK plus -PEAK)/2, with the Modulation Analyzer.

   b. Verify that the mean AM depth is between 84.4% and 95.6%.

   c. Program the UUT to a modulation frequency of 1 kHz.

   d. Verify that the mean AM depth is between 84.4% and 95.6%.

3. AM Accuracy and Distortion Test

   a. Connect the output of the LFSSG to the UUT MOD INPUT and the DVM (use a BNC T connector).

   b. Program the UUT for a frequency of 0.4 MHz, 1 dBm level, and EXT AM at 30% AM depth.

   c. Program the LFSSG for 1 kHz at 0.7071V rms as measured by the DVM.

   d. Connect the modulation output of the Modulation Analyzer to the input of the Distortion Analyzer.

   e. Set the Distortion Analyzer to measure the THD of the 1-kHz modulation signal.

   f. Verify that the mean AM depth (+PEAK plus -PEAK)/2, is between 26.8% and 33.2%.

   g. Verify that the THD is less than 1.5%.

h. Program the remaining combinations of RF frequency, level, and AM depth listed in Table 4A-3. For each combination, verify that the mean AM depth is between the allowed limits and that the THD is less than the allowed limit, which depends on programmed depth, as shown in Table 4A-4:

i. Disconnect the LFSSG from the UUT.

4. Incidental FM Test

a. Program the UUT for 30% INT AM at 1 kHz, at 1050 MHz, and 10 dBm.

b. Program the Modulation Analyzer to measure peak FM deviation in a 0.3- to 3-kHz bandwidth.

c. Verify the incidental FM is less than 300 Hz.

NOTE

It may be necessary to compensate for residual noise effects using the procedure presented in the Modulation Analyzer manual.

5. Residual AM Test

a. Program the UUT to 100 MHz, +7 dBm, and no modulation.

b. Program the Modulation Analyzer to measure rms (or average) AM in a 0.05-kHz to 15-kHz bandwidth.

c. Verify the residual AM is less than 0.1% rms (or 0.09% average).

6. FM Accuracy and Distortion Test

a. Connect the output of the LFSSG to the UUT MOD INPUT connector and the DVM (use a BNC T connector).

b. Program the Modulation Analyzer to measure peak FM in a 0.05-kHz to 20-kHz bandwidth.

c. Program the UUT frequency to 245 MHz, 7 dBm, 99.9 kHz deviation, and EXT FM.

d. Set the LFSSG to 10 kHz and adjust its level so the DVM reads 707.1 mV rms.

e. Set the Distortion Analyzer to measure distortion at 10 kHz.

f. Verify that the Modulation Analyzer reading is between 93 kHz to 107 kHz, the THD is less than 1% as the UUT frequency is stepped up to 1045 MHz in 50-MHz steps. (Tip: use the instrument FRE(Ω) STEP feature.)

g. Set the LFSSG to 0.4 kHz and adjust its level so the DVM reads 707.1 mV rms.

h. Program the Modulation Analyzer to measure FM in a 0.05-kHz to 3-kHz bandwidth.

Table 4A-3. AM Test Conditions

FREQUENCY (MHz)	LEVEL (dBm)	AM (%)
0.4	1	30
		70
		90
	7	30
		70
		90
244.9	1	70
		90
	7	70
		90
245	1	70
		90
	7	70
		90
512	1	70
		90
	7	70
		90
1050	1	70
		90
	7	70
		90

Table 4A-4. AM Depth Range

PROGRAMMED DEPTH (%)	MEAN AM DEPTH(%) MIN.	MAX.	MAXIMUM THD(%)
30	26.8	33.2	1.5
70	65.2	74.8	3
90	84.4	95.6	5

i. Set the Distortion Analyzer to measure distortion at 0.4 kHz.

j. Verify that the Modulation Analyzer reading is between 93 kHz to 107 kHz, the THD is less than 1% as the UUT frequency is stepped down to 245 MHz in 50-MHz steps.

k. Program the UUT to 9.99 kHz deviation.

l. Verify that the Modulation Analyzer reading is between 9.3 kHz and 10.7 kHz.

m. Program the UUT to 0.999 kHz deviation.

n. Verify that the Modulation Analyzer reading is between 0.93 kHz and 1.07 kHz.

NOTE

It may be necessary to compensate for residual noise effects using the procedure presented in the Modulation Analyzer manual.

o. Disconnect the LFSSG from the UUT.

7. Incidental AM Test

   a. Program the UUT for 50-kHz deviation, INT FM only, at 1 kHz, a level of 7 dBm and a frequency of 11 MHz.

   b. Program the Modulation Analyzer to measure peak AM in a 0.3-kHz to 3-kHz bandwidth.

   c. Verify that the incidental AM is less than 1%.

8. Residual FM Test

   a. Program the UUT for a frequency of 10.03999 MHz at +7 dBm and no modulation.

   b. Program the HFSSG to 11.53999 MHz and 1.0 dBm.

   c. Connect the HFSSG output to the Modulation Analyzer external LO input connector.

   d. Program the Modulation Analyzer to measure average FM in the .3 to 3 kHz bandwidth.

   e. Verify that the Modulation Analyzer reading is less than 10 Hz for the 6061A and less than 18 Hz for the 6060B.

   f. Verify that the Modulation Analyzer reading is less than 10 Hz average for the 6061A and less than 18 Hz average for the 6060B at the following UUT frequencies (program the external LO to a frequency 1.5 MHz higher than the UUT frequency in each case):

      89.03999, 90.03999, and 244.03999 MHz

   g. Verify that the Modulation Analyzer reading is less than 5 Hz average for the 6061A and less than 9 Hz average for the 6060B at the following UUT frequencies (program the external LO to a frequency 1.5 MHz higher than the UUT frequency in each case):

      319,364, and 511 MHz

   h. Verify that the Modulation Analyzer reading is less than 10 Hz average for the 6061A and less than 18 Hz average for the 6060B at the following UUT frequencies (program the external LO to a frequency 1.5 MHz higher than the UUT frequency in each case):

      512.002, 639.002, 640.002, 729.002, 730.002, 889.002, and 1049.002 MHz

   j. Verify that the Modulation Analyzer reading is less than 16 Hz average for the 6061A and less than 40 Hz average for the 6060B at the UUT frequencies in step h. (programming the HFSSG 1.5 MHz greater than the UUT).

   k. Verify that the Modulation Analyzer reading is less than 8 Hz average for the 6061A and less than 20 Hz average for the 6060B at the UUT frequencies in step g.

l. Verify that the Modulation Analyzer reading is less than 16 Hz average for the 6061A and less than 40 Hz average for the 6060B at the UUT frequencies in step f.

4A-13. VSWR TESTS

These tests use a VSWR bridge and a Spectrum Analyzer to verify VSWR of the UUT.

REQUIREMENTS

The output VSWR is less than 1.5:1 for output levels < +1 dBm; < 2:1 elsewhere.

TEST EQUIPMENT REQUIRED

VSWR bridge
RF Spectrum Analyzer
High Frequency Synthesized Signal Generator (HFSSG)

REMARKS

The UUT settings in this procedure are chosen to provide confidence in the VSWR performance of the UUT throughout its range. However, performance also may be checked at other attenuator settings.

PROCEDURE

1. Low Frequency Band at Low Level Test

   a. With the unit turned on, reset the UUT by selecting [RCL] [9] [8].

   b. Program the UUT to 1 MHz at +0.9 dBm.

   c. Select special function Fixed Range on the UUT by pressing [spcl] [9] [1].

   d. Using the EDIT function on the UUT, edit the amplitude to -30.1 dBm. Verify that the UNCAL annunciator illuminates.

NOTE

This procedure leaves the output attenuators set as they would be for a +0.9 dBm output level, but uses the electronic control to turn down the RF level coming out of the UUT.

   e. Connect the UUT to the Device Under Test port of the VSWR Bridge.

   f. Connect the Spectrum Analyzer to the RF OUT port of the VSWR Bridge.

   g. Connect the HFSSG to the RF IN port of the VSWR Bridge.

   h. Program the HFSSG to 10 MHz at +13 dBm.

   i. Set the Spectrum Analyzer to display approximately 10 - 250 MHz and set the Reference Level to +10 dBm.

j. Step the HFSSG from 10 to 240 MHz in 5 MHz steps. Locate the frequency at which the reflected signal (displayed by the spectrum analyzer) is maximum and record this level. This is the point with worst-case VSWR.

k. Disconnect the UUT from the VSWR bridge and record the new level.

l. Calculate the Return Loss (difference) between the two recorded levels. The difference must be at least 14 dB (14 dB of Return Loss = 1.5:1 VSWR).

2. Mid and High Frequency Bands at Low Level Test

a. Program the UUT to 250 MHz at +0.9 dBm.

b. Using the EDIT function on the UUT, edit the amplitude to -30.1 dBm.

c. Connect the UUT to the Device Under Test port of the VSWR Bridge.

d. Set the Spectrum Analyzer to display approximately 245 - 1050 MHz.

e. Step the HFSSG from 250 to 1050 MHz in 5 MHz steps. Locate the frequency at which the reflected signal is maximum and record this level.

f. Disconnect the UUT from the VSWR bridge and record the new level.

g. Calculate the Return Loss between the two recorded levels. The difference must be at least 14 dB.

3. Mid and High Frequency Bands at High Level Test

a. Program the UUT to +10 dBm.

b. Using the EDIT function on the UUT, edit the amplitude to -30 dBm.

c. Connect the UUT to the Device Under Test port of the VSWR Bridge.

d. Step the HFSSG from 250 to 1050 MHz in 5 MHz steps. Locate the frequency at which the reflected signal is maximum and record this level.

e. Disconnect the UUT from the VSWR bridge and record the new level.

f. Calculate the Return Loss between the two recorded levels. The difference must be at least 9.5 dB (9.5 dB of Return Loss = 2:1 VSWR).

4. Low Frequency Band at High Level Test

a. Program the UUT to 1 MHz at +10 dBm.

b. Using the EDIT function on the UUT, edit the amplitude to -30 dBm.

c. Connect the UUT to the Device Under Test port of the VSWR Bridge.

d. Set the Spectrum Analyzer to display approximately 10 - 250 MHz.

e. Step the HFSSG from 10 to 240 MHz in 5 MHz steps. Locate the frequency at which the reflected signal is maximum and record this level.

f. Disconnect the UUT from the VSWR bridge and record the new level.

g. Calculate the Return Loss between the two recorded levels. The difference must be at least 9.5 dB.

h. Reset the UUT by selecting [RCL] [9] [8].

Section 4B
Access Procedures

4B-1. INTRODUCTION

The information in this section describes the general access procedures for the following major module assemblies.

Front Section
Rear Section
A2A1 Synthesizer PCA
A2A4 Output PCA
A2A5 Attenuator/RPP Assembly
A2A2 VCO PCA

Access to other assemblies is straightforward; and therefore, other assemblies are not detailed in this manual.

4B-2. LOCATION OF MAJOR ASSEMBLIES

The location of the major assemblies of the Signal Generator is illustrated in Section 8.

Information on exchanging modules is presented in Section 4D.

4B-3. ACCESS INSTRUCTIONS

Access instructions for each module of the Signal Generator are provided in the following paragraphs. Before performing any disassembly of the Signal Generator, remove the power cord from the rear panel power receptacle and remove the exterior top and bottom instrument covers.

To install the assemblies, reverse the disassembly steps. Be certain the pin connectors and filter sockets are straight when replacing the boards.

4B-4. Removing the Front Section

1. Disconnect the MOD INPUT wire W1 at the module connector located at the front of the Attenuator module.

2. Disconnect the front panel display ribbon cable at the controller.

3. Remove the decals from both front panel handles. Removing the decals ruins them; new decals should be installed to maintain a proper instrument appearance.

   The part number for the decal is listed in Section 5.

4. Remove the five flathead screws from each front panel handle.

4B-5. Removing the Rear Section

1. Disconnect the Synthesizer, Controller, and Attenuator power cable at the power supply.

2. If the High-Stability Reference option is installed, disconnect the oscillator power cable from the Auxiliary power supply.

3. Remove the IEEE-488 Interface Assembly from the back of the instrument rear panel.

4. Remove the inside part of the 10 MHz OUT and the REF IN BNC connectors.

5. Remove the decals for both rear panel handles. Removing the decals ruins them; replace with new decals to maintain a proper instrument appearance. The part number for the decal is listed in Section 5.

6. Remove the five flathead screws from each handle and swing the rear panel assembly out from the Signal Generator.

7. If you need to completely detach the rear panel assembly fromthe Generator, unfasten the front panel power switch.

4B-6. Removing the A2A1 Synthesizer PCA

1. Remove the number 6 screws holding the top shield cover. (The number 10 screws are adjustment access screws and need not be removed.) Remove the shield cover.

2. Remove the number 6 screws holding the board, and then carefully remove the board.

4B-7. Removing the A2A4 Output PCA

1. Remove the number 6 screws holding the bottom shield cover. (The number 10 screws are adjustment-access screws and need not be removed.) Remove the shield cover.

2. Remove the plug-in coupling capacitor between the Output and the VCO boards.

3. Remove the number 6 screws holding the board, and then carefully remove the board.

4B-8. Removing the A2A5 Attenuator/RPP Assembly

1. Disconnect the SMA connector at the Attenuator that leads to the RF output.

2. Disconnect the control harness from the Relay Driver/RPP PCA.

3. Remove number 6 screws holding down the assembly.

4B-9. Removing the A2A2 VCO PCA

1. Remove the number 6 screws holding the bottom shield cover. (The number 10 screws are adjustment-access screws and need not be removed.) Remove the shield cover.

2. Remove the plug-in capacitor that couples the Output board to the VCO.
3. Remove the cable from the VCO to the Output board.
4. Remove the number 6 screws holding the assembly, and remove the board.

Section 4C
Calibration Adjustments

4C-1. INTRODUCTION

The adjustment procedures for the Generator are described in the following paragraphs. The recommended test equipment for calibration is denoted by an A in Table 4A-1.

Adjustment procedures for the Power Supply, Output, and Synthesizer, assemblies are covered in this section. Modulation indicator adjustments are also included in this section. Adjustment procedures for the High-Stability Reference and Medium-Stability Reference options are given in Section 6.

4C-2. SAFETY

This is a Safety Class I instrument. It is provided with a protective earth terminal. Warnings and cautions are for your protection and to avoid damage to the equipment. Please take them seriously.

WARNING

BECAUSE SOME SERVICE PROCEDURES DESCRIBED HERE ARE DONE WITH POWER APPLIED TO THE SIGNAL GENERATOR AND WITH PROTECTIVE COVERS REMOVED, SERVICE SHOULD BE DONE ONLY BY TRAINED SERVICE PERSONNEL WHO UNDERSTAND THE HAZARDS INVOLVED. WHERE SERVICE CAN BE PERFORMED WITHOUT POWER APPLIED, THE SIGNAL GENERATOR SHOULD BE UNPLUGGED FROM THE LINE POWER.

DO NOT INTERRUPT THE PROTECTIVE GROUNDING CONNECTION. TO DO SO WOULD CREATE A POTENTIAL SHOCK HAZARD THAT COULD RESULT IN PERSONAL INJURY. SECURE THE INSTRUMENT AGAINST UNINTENDED OPERATION IF IT IS LIKELY THAT THIS PROTECTION HAS BEEN IMPAIRED. USE ONLY 250V FUSES OF THE PROPER CURRENT RATING.

CAUTION

To avoid damage to the Generator, unplug the instrument before removing any Printed Circuit Assembly.

4C-3. POWER SUPPLY ADJUSTMENT

This procedure covers the +37V adjustment, R3, on the A3A1 Power Supply PCA. This is the only adjustment on the Power Supply PCA.

TEST EQUIPMENT

DMM

REMARKS

This adjustment is accessible through a hole in the bottom lip of the rear panel.

See Figure 4C-1 for the location of the power supply test points.

PROCEDURE

R3 is adjusted for +37V as measured at TP5.

1. Remove the UUT top and bottom instrument covers. Connect the DMM to TP5 with the ground lead (black wire) connected to the power distribution connection point on the module plate.

2. Program the UUT to [RCL] [9][8].

3. Adjust R3 for a DMM reading of +37.00 ± 0.05V.

4. Verify the other supply voltages at the test points listed in the following:

TP	Voltage Limits
11	14.5 to 15.7
3	14.5 to 15.7
2	-14.5 to -15.7
4	4.85 to 5.20
1	17.4 to 22.6

NOTE

The voltage at TP1 depends on the line voltage. The limits shown are for a line voltage exactly equal to the line voltage selector setting, i.e., 100, 120, 220, or 240V ac.

5. Remove the test leads, and reinstall the top and bottom instrument covers.

4C-4. EXTERNAL MODULATION LEVEL INDICATOR ADJUSTEMENT

This procedure covers the adjustment of the External Modulation Level Indicator, R16.

TEST EQUIPMENT

DVM

REMARKS

This adjustment is independent of other adjustments and assumes proper circuit operation.

Adjustment R16 is located below TP1 on the rear of the Display PCA, just above the POWER switch.

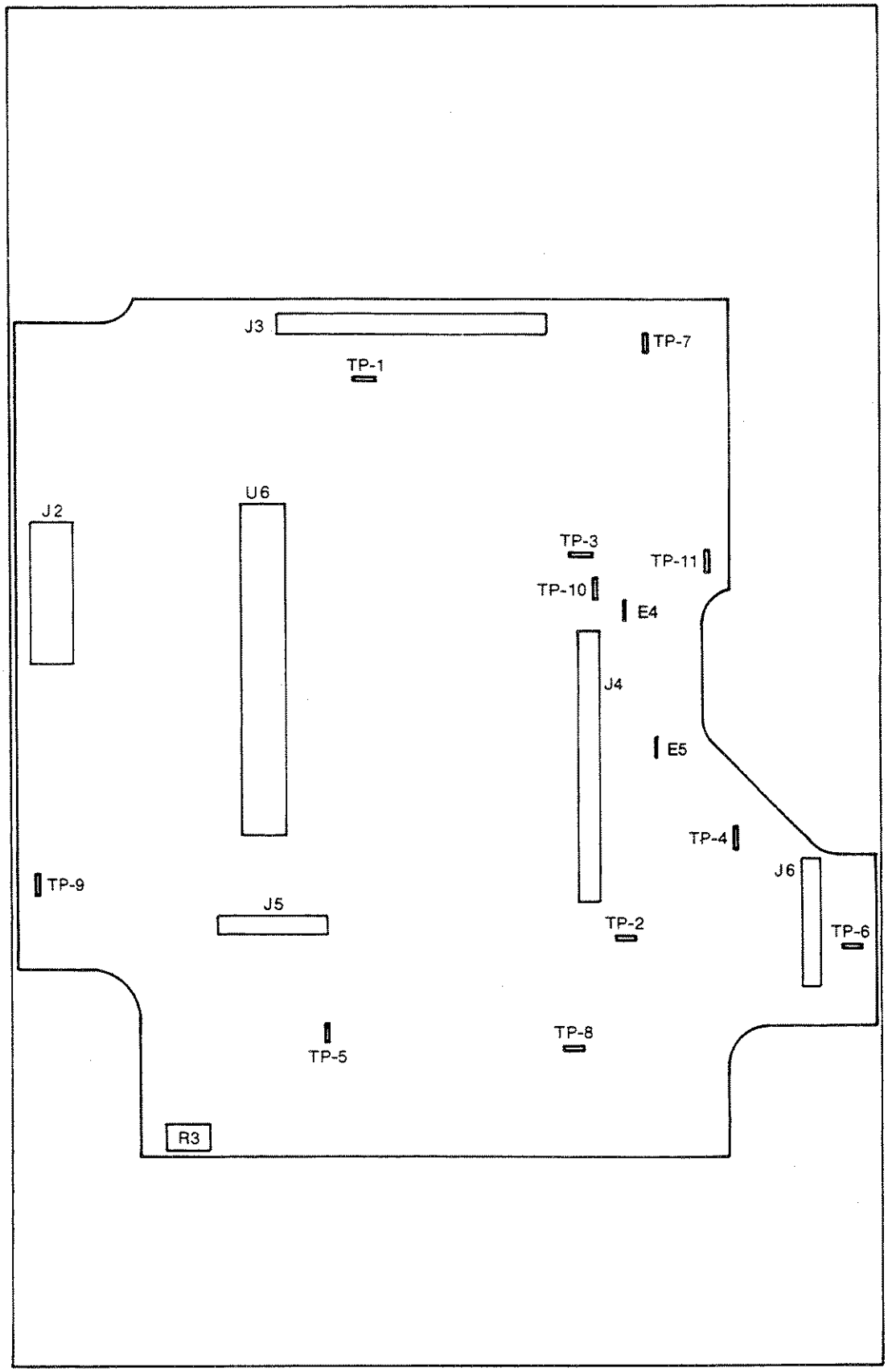

Figure 4C-1. Power Supply Test Points

PROCEDURE

Adjust R16 for 0.98V at TP1.

1. Gain access to the rear of the Display PCA by removing the top instrument cover.
2. Connect the DVM to measure the dc voltage at TP1 relative to the chassis.
3. Adjust R16 for +0.9800 ± .0005V dc.

4C-5. OUTPUT ASSEMBLY ADJUSTMENT

This procedure covers all of the adjustments on the A2A4 Output PCA, as follows:

- Level DAC Offset, R309
- Modulation Oscillator Level, R419
- Detector Offset, R144
- AM Depth, R421
- RF Level, R311
- Het Level, R227

These adjustments, as well as TP7, are accessible by removing the seven number 10 access screws in the top module cover. Refer to Figure 4C-2 to identify the access screw corresponding to a particular adjustment.

Any adjustment can be made independently unless it is noted that it interacts with another adjustment. Interdependent adjustments must be done in the sequence presented. If more than one adjustment is necessary, do them in the sequence presented.

4C-6. Level DAC Offset Adjustment

TEST EQUIPMENT

DVM

REMARKS

This adjustment is normally required only when U302 or any associated components are replaced or when the adjustment has been changed or has shifted.

CAUTION

This adjustment directly affects the output level and should not be adjusted indiscriminately.

PROCEDURE

The Level DAC Offset, R309, is adjusted for 0 ±0.5 mV at TP7 with the RF OUTPUT turned OFF.

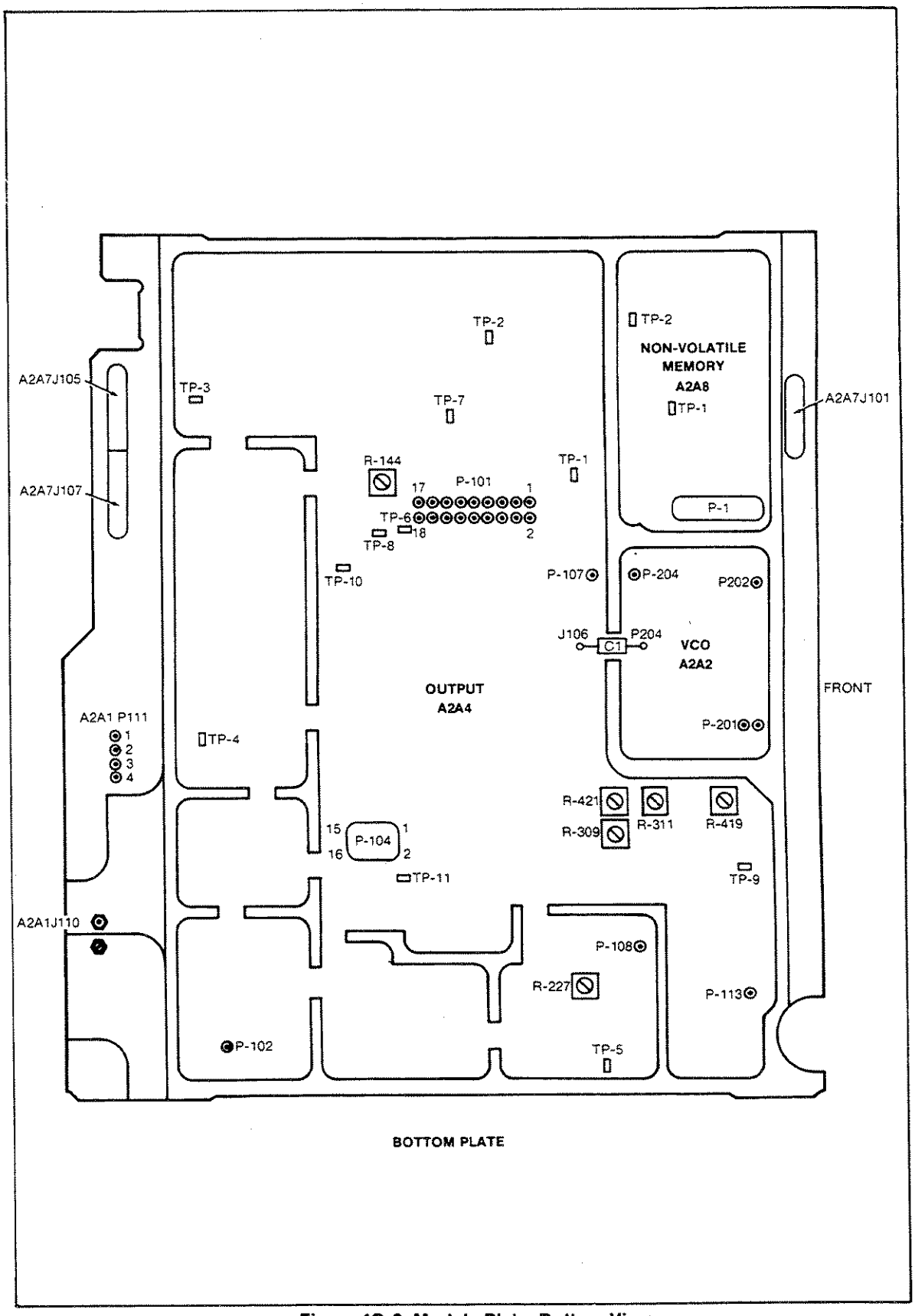

Figure 4C-2. Module Plate, Bottom View

1. Gain access by removing the bottom instrument cover and removing the access screws for TP7 and R309.

2. Program the UUT to [RCL] [9][8], and program the RF OUTPUT to OFF.

3. Connect the DVM to measure the voltage between TP7 and the power distribution connection point on the module plate.

4. Adjust R309 for an indication of +0 mV ± 0.5 mV.

5. Program the UUT RF OUTPUT to ON.

6. Replace the access screws.

4C-7. Modulation Oscillator Level Adjustment

This adjustment sets the modulation oscillator level.

TEST EQUIPMENT

Modulation
DVM
Low Frequency Synthesized Signal Generator (LFSSG)

REMARKS

The Modulation Oscillator Level adjustment, R419, is normally required only when components in the modulation oscillator or modulation switching circuits have been replaced or the adjustment has been changed or has shifted.

PROCEDURE

The AM depth, with internal modulation, is adjusted via R419 to equal the AM depth with a 1-volt peak external modulation signal as measured with the Modulation Analyzer.

1. Gain access to the access screws for R419 by removing the bottom instrument cover and the access screws for R419.

2. Connect the output of the LFSSG to the UUT MOD IN connector and the DVM using a BNC tee.

3. Program the UUT to RCL 98, then program the UUT to 350 MHz, 7 dBm, and EXT AM at 90% AM depth.

4. Program the LFSSG for 1 kHz and a voltage of 0.7071V rms, as measured by the DVM.

5. Connect the UUT RF OUTPUT connector to the Modulation Analyzer RF input.

6. Program the Modulation Analyzer to measure + Peak AM in a 0.3-kHz to 15-kHz bandwidth.

7. Note the measured AM depth reading with the Modulation Analyzer.

8. Turn off the UUT EXT AM control and turn on the INT AM control.

9. Program the UUT for 1000-Hz modulation frequency.

10. Adjust R419 for an AM depth equal to that noted in step g.

11. Turn off the UUT INT AM control.

12. Replace the access screw.

4C-8. Detector Offset Adjustment

This adjustment sets the detector offset voltage.

TEST EQUIPMENT

Power Meter and Sensor

REMARKS

The UUT must be operated at room temperature for at least one hour with the module plate cover in place before continuing with this adjustment procedure.

This adjustment is normally required only when components in the detector or detector linearizer circuits have been replaced or when the adjustment has been changed or has shifted. If the Detector Offset is adjusted, perform the AM Depth adjustment.

CAUTION

This adjustment directly affects the output level and should not be adjusted indiscriminately.

PROCEDURE

The Detector Offset adjustment, R144, is adjusted to provide a 20-dB change in output power for a 20-dB change in the Level DAC with level correction disabled, and while operating in fixed range.

1. Gain access for this adjustment by removing the instrument bottom cover.

2. Program the UUT to [RCL] [9][8], then program the UUT to 350 MHz and 12 dBm.

3. Program the UUT to [SPCL] [8][1] and [SPCL] [9][1]. These special functions disable all level correction and enable amplitude fixed-range.

4. Remove the Detector Offset adjustment access screw from the bottom module plate cover.

5. Zero the Power Meter.

6. Connect the Power Sensor to the UUT RF OUTPUT connector.

7. Program the UUT to +12 dBm.

8. Note the Power Meter reading.

9. Program the UUT for -8 dBm, using the EDIT keys.

10. Adjust the Detector Offset adjustment, R144, for a Power Meter reading 20 dB ±0.1 dB below the reading obtained in step h.

11. Repeat the previous four steps until the difference between the power measurements is 20 ± 0.1 dBm. This adjustment should require three or fewer iterations.

12. Program the UUT to +12 dBm, using the EDIT keys. Note the Power Meter reading.

13. Program the UUT for +2 dBm using the EDIT keys. Verify that the Power Meter reading is 10 dB ±.2 dB below the previous reading.

14. Program the UUT for [SPCL] [0][0]. This enables amplitude level correction and disables amplitude fixed range.

15. Disconnect the Power Sensor from the UUT, and replace the Detector Offset adjustment access screw.

4C-9. AM Depth Adjustment

TEST EQUIPMENT

DVM

Modulation Analyzer
LFSSG

REMARKS

The UUT must be operated at room temperature for at least one hour with the module plate covers in place before continuing with this adjustment procedure.

CAUTION

This adjustment directly affects the output level and should not be adjusted indiscriminately.

This adjustment is normally required only when components in the AM signal processing circuits have been replaced, or the adjustment has been changed or shifted. If this adjustment is made, it is necessary to perform the RF Level adjustment after the AM Depth adjustment has been made.

PROCEDURE

Adjust the AM Depth potentiometer, R421, for 90% AM depth as measured with the Modulation Analyzer when the UUT is programmed to 90% AM.

1. Remove the AM Depth adjustment access screw from the bottom module plate cover.

2. Connect the output of the LFSSG to the UUT MOD IN connector and to the DVM using a BNC Tee.

3. Program the UUT to [RCL] [9][8], then program the UUT for 350 MHz, +1 dBm, and EXT AM at 90% AM depth.

4. Program the LFSSG for 1 kHz and a voltage of 0.7071 rms, as measured by the DVM.

5. Connect the UUT RF OUTPUT connector to the Modulation Analyzer input.

6. Program the Modulation Analyzer to measure AM + Peak, in a 0.05-kHz to 15-kHz bandwidth.

7. Alternately measure + PEAK and - PEAK and adjust the AM Depth adjustment, R421, until the readings are symmetrical, about 90%.

8. Replace the AM Depth adjustment access screw.

4C-10. RF Level Adjustment

TEST EQUIPMENT

Power Meter and Sensor

REMARKS

The UUT must be operated at room temperature for at least one hour with the module plate covers in place before continuing with this adjustment procedure.

This adjustment is required if any of the following events occur:

- The A2A4 Output PCA, or the A2A5 Attenuator/RPP Assembly has been replaced.
- The AM Depth adjustment is made.
- The Level DAC or any associated components are replaced.
- The RF Level adjustment has been inadvertently changed or shifted.

CAUTION

This adjustment directly affects the output level and should not be adjusted indiscriminately.

PROCEDURE

With the UUT programmed to +9 dBm, adjust the RF Level adjustment, R311, for +9-dBm output as measured with the Power Meter.

1. Program the UUT to [RCL][9][8], then program the UUT to 350 MHz, +9 dBm, and turn all modulation OFF.

2. Zero the Power Meter.

3. Remove the RF Level adjustment access screw from the bottom module plate cover.

4. Connect the Power Sensor to the UUT RF connector.

5. Adjust RF Level adjustment, R311, for a reading of exactly +9 dBm on the Power Meter.

6. Replace the RF Level adjustment access screw.

4C-11. Het Level Adjustment

TEST EQUIPMENT

Power Meter and Sensor

REMARKS

The UUT must be operated at room temperature for at least one hour with the module covers in place before continuing with this adjustment procedure.

This adjustment is normally required only when components in the het band circuits have been replaced or when the adjustment has been changed or has shifted.

CAUTION

This adjustment directly affects the output level and should not be adjusted indiscriminately.

PROCEDURE

With the UUT programmed to +9 dBm, adjust the Het Level adjustment, R227, for equal output power at 100 MHz and 350 MHz.

1. Program the UUT to [RCL] [9][8], then program the UUT to 350 MHz and +9 dBm.

2. Zero the Power Meter.

3. Remove the Het Level adjustment access screw from the bottom module plate cover.

4. Connect the Power Sensor to the UUT RF OUTPUT connector. Note the Power Meter reading.

5. Program the UUT to 100 MHz.

6. Adjust Het Level adjustment, R227, for a reading equal to that previously noted.

7. Replace the Het Level adjustment access screw.

4C-12. A2A1 SYNTHESIZER PCA ADJUSTMENTS

Each of the following adjustment procedures is independent; that is, they can be done individually or in any sequence. Figure 4C-3 shows the top view of the module plate.

The following are routine adjustments for the A2A1 Synthesizer PCA:

- R230 10-MHz Adjustment
- R82 FM Cal Adjustment
- R90 Low-Rate Deviation Adjustment
- R87 FM Flatness Adjustment

The following only need adjustment if the associated circuits are repaired:

- L49 20-kHz Notch Filter Adjustment
- L50 40-kHz Notch Filter Adjustment
- R104 and R125 VCO Clamp Adjustments
- C206 800-MHz Oscillator Adjustment
- C240 10-MHz Lock-Range Centering Adjustment

4C-13. FM Adjustments

TEST EQUIPMENT

Modulation Analyzer
LFSSG
DVM

REMARKS

The FM Cal adjustment, R82, sets the overall deviation accuracy, whereas the Low-Rate Deviation adjustment, R90, equalizes the low and high rate deviation. The FM Flatness adjustment, R87, equalizes the deviation across the band from 0.2 to 10 kHz.

PROCEDURE

The FM deviation of the UUT, as measured with the Modulation Analyzer, is adjusted to agree with the programmed deviation at 10-kHz, 0.2-kHz and 0.5-kHz rates by adjusting R82, R90, and R87, respectively.

1. Remove the instrument cover and the FM CAL, FM Flatness and Low-Rate Deviaion access screws from the cover of the module plate.

2. Connect the output of the LFSSG to the UUT MOD IN connector and to the DVM using a BNC tee.

3. Connect the UUT RF OUTPUT to the Modulation Analyzer input.

4. Program the Modulation Analyzer to measure FM + peak. No filters should be active.

5. Program the UUT to the [RCL][9][8]. Then program the UUT to 385.5-MHz, 7 dBm, EXT FM, 99.9-kHz deviation.

6. Program the LFSSG to 10 kHz and 0.7071V rms as measured by the DVM.

7. Adjust R82 for 100.0 kHz, as measured by the Modulation Analyzer.

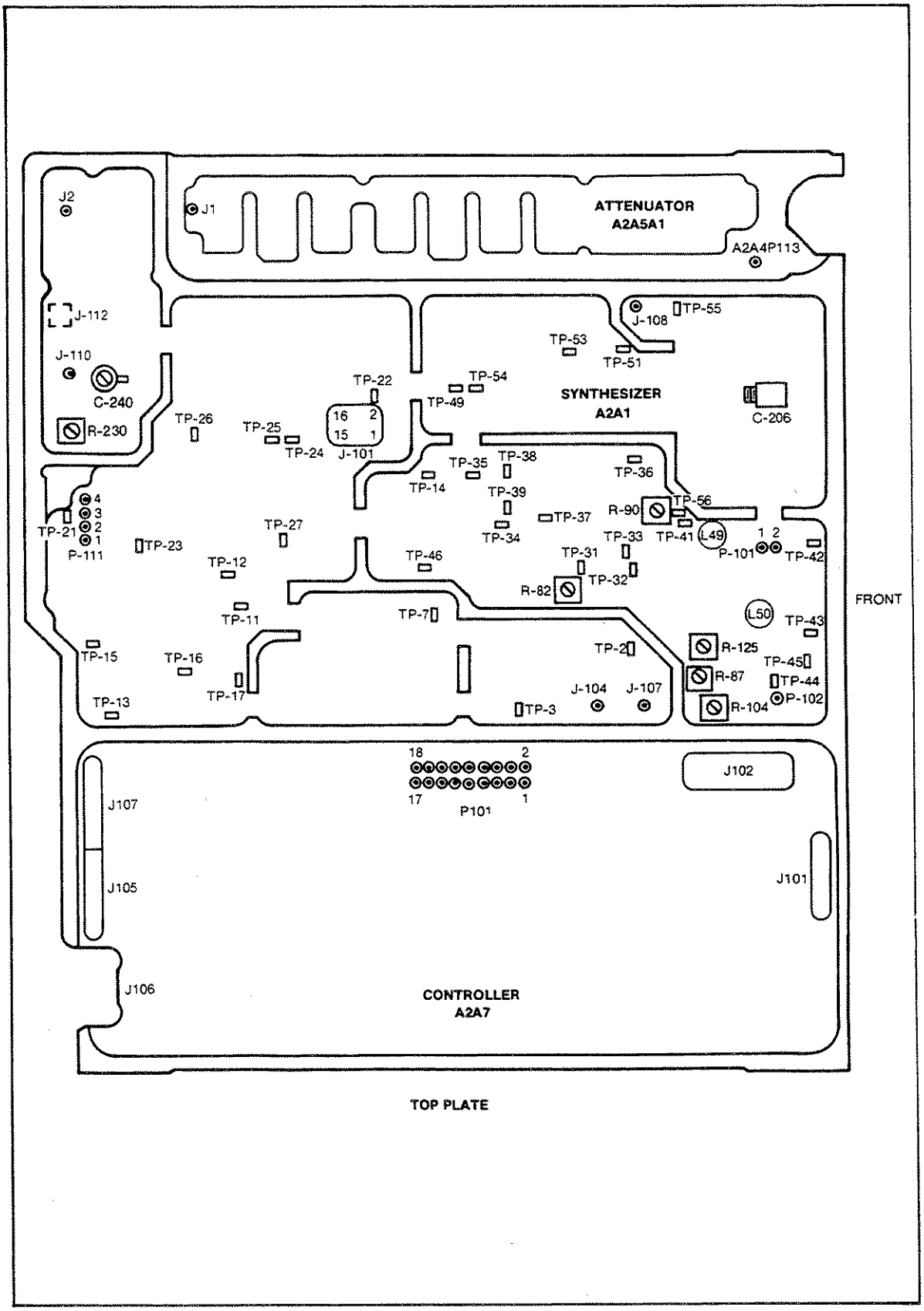

Figure 4C-3. Module Plate, Top View

8. Program the LFSSG to 0.2 kHz and 0.7071V rms, as measured by the DVM.

9. Adjust R90, the low-rate deviation for 100.0 kHz, as measured on the Modulation Analyzer.

10. Program the LFSSG to 500 Hz, and adjust R87 for 100.0 kHz as measured on the Modulation Analyzer.

11. Repeat steps 6 through 9 until the deviation flatness is 100.0 kHz ± 0.3 kHz.

12. Turn the UUT EXT FM off, and note the Modulation Analyzer peak deviation (noise) reading.

13. Turn the UUT EXT FM on.

14. Program the LFSSG to 10 kHz and 0.7071V rms as measured by the DVM.

15. With the Modulation Analyzer, alternately measure +peak and -peak FM, and adjust R82 so the readings are symmetrical, about 99.9 kHz plus the noise noted in step 12.

4C-14. 20-kHz and 40-kHz Notch Filter Adjustments

TEST EQUIPMENT

RF Spectrum Analyzer
LFSSG

REMARKS

These adjustments are normally not required unless L49, L50, C123, C99, C124, C126 or C125 are replaced, or unless the Generator has been subjected to severe usage.

PROCEDURE

The 20-kHz and 40-kHz Notch Filter adjustments, L49 and L50, are adjusted for sideband level nulls using the RF Spectrum Analyzer.

1. Remove the instrument and the module plate top covers.

2. Connect the LFSSG to TP56 (high) and TP36 (low) using clip leads.

3. Program LFSSG to 20 kHz and 0.2V rms, terminated.

4. Connect the UUT RF OUTPUT to the RF Spectrum Analyzer input.

5. Program the UUT to 300 MHz and +13 dBm.

6. Adjust the RF Spectrum Analyzer to display the signal centered on the display.

7. Set the span to 10 kHz/division and 1-kHz bandwidth. The 20-kHz sidebands should be visible.

8. Adjust L49 to minimize the 20-kHz sidebands.

9. Program the LFSSG to 40 kHz.

10. Adjust L50 to minimize the 40-kHz sidebands.

4C-15. VCO Voltage-Clamp Adjustment, R104 and R125

TEST EQUIPMENT

Frequency Counter
DMM

REMARKS

The VCO voltage-clamp adjustment is normally required when either the A2A2 VCO PCA or the A2A1 Synthesizer PCA has been replaced or when either of these assemblies has been subjected to repair or modifications.

PROCEDURE

The UUT PLL is disabled to cause the VCO frequency to be at the limits of its range.

1. Remove the instrument and module plate top covers of the UUT.

2. Connect the UUT rear panel 10 MHz OUT to the Frequency Counter 10-MHz reference input, and connect the UUT RF OUTPUT to the Frequency Counter input.

3. Program the UUT to [RCL][9][8], 500 MHz and +13 dBm.

4. Using a clip lead, carefully short TP14 to ground to cause the VCO to go to the upper frequency limit.

5. Adjust R104 for 540 MHz ± 1 MHz.

6. Remove the shorting clip lead from TP14.

7. Program the UUT for 250 MHz (still at +13 dBm).

8. Using the clip lead, carefully short TP35 to ground to cause the VCO to go to its lower frequency limit. The measured voltage at TP44 should be approximately 1.7V.

9. Adjust R125 for 237 MHz ±1 MHz.

10. Remove the shorting clip lead from the UUT.

NOTE

On earlier units, adjustment R125 was not present. In these cases the frequency measured in step 9 should be less than 240 MHz.

4C-16. 800-MHz Oscillator Adjustment

TEST EQUIPMENT

Frequency Counter
DMM

REMARKS

This adjustment is normally not required unless components in the 800-MHz oscillator are replaced or the Generator has been subjected to severe usage.

PROCEDURE

The PLL control voltage operating point is adjusted to 16V while the loop is phase-locked.

1. Remove the instrument and the module plate top covers.
2. Program the UUT to [RCL] [9][8]; then, program 200 MHz.
3. Connect the DMM to measure voltage between TP53 and the chassis.
4. Adjust C206 for 16.0V ± 0.5V.

4C-17. 10-MHz Lock-Range Centering Adjustment

TEST EQUIPMENT

Frequency Standard
Low Frequency Synthesized Signal Generator (LFSSG)
Oscilloscope
BNC Tee

REMARKS

The UUT reference output and the LFSSG signal are viewed simultaneously on the oscilloscope for frequencies near the limit of the lock-in range. The 10-MHz crystal oscillator is adjusted for a stable display on the oscilloscope at both upper and lower limits. The external reference input level to the Generator is reduced to determine sensitivity.

PROCEDURE

1. Remove the Generator top cover and the 10-MHz adjustment access screw from the the module plate. (See Figure 4C-3 C240 for 10-MHz adjustment location.)
2. Connect the frequency standard to the reference input of the LFSSG.
3. Connect the LFSSG output to the oscilloscope vertical input channel 1 using a BNC tee, and then connect the cable to the UUT 10 MHz IN using a cable less than three feet in length.
4. Connect the UUT rear panel 10 MHz OUT to oscilloscope vertical input channel 2.
5. Program the LFSSG to 10 MHz and 0 dBm.
6. Set the UUT rear panel REF INT/EXT switch to EXT.

7. Set the vertical controls of the oscilloscope to display both the LFSSG output and the UUT 10-MHz signal. Set the triggering to channel 1, and adjust the timebase for 0.1us/div.

8. Edit the LFSSG to 150 Hz above 10 MHz (10.00015 MHz).

9. If the signals are unlocked, adjust C240 for a locked condition. Verify the UNCAL indicator is not lit.

10. Adjust C240 clockwise until the two waveforms are not synchronized (break lock). Verify the UNCAL indicator is flashing. Turn C240 counterclockwise to the first stable, locked point.

11. Edit the LFSSG to 150 Hz below 10 MHz (9.99985 MHz).

12. Verify Locked Condition: Two wave forms synchronized and UNCAL indicator is not lit.

13. Program the LFSSG to 10 MHz.

14. Reduce the level of LFSSG until the signals displayed on the oscilloscope indicate an unlock condition.

15. Increase the LFSSG level until the oscilloscope display first indicates the locked-point. Verify that this level is less than 300 mV peak-to-peak as measured with the oscilloscope.

4C-18. Reference Frequency Adjustment, R230

TEST EQUIPMENT

Frequency Standard Oscilloscope

REMARKS

The accuracy of the reference frequency adjustment depends on the accuracy of the Frequency Standard.

The Generator may be equipped with either Option -130 High-Stability Reference, or Option -132 Medium-Stability Reference.

Skip the following procedure if the UUT is equipped with the High-Stability Reference or Medium-Stability Reference, and use the adjustment procedures in Section 6 of this manual.

PROCEDURE

The UUT reference waveform is viewed on the Oscilloscope while triggering on the Frequency Standard. The 10-MHz adjustment R230 is adjusted for a stationary display.

1. Remove the instrument top cover and the 10-MHz adjustment R230 access screw from the module plate cover.

2. Connect the UUT rear panel 10 MHz OUT to the Oscilloscope vertical input.

3. Connect the Frequency Standard output to the Oscilloscope external trigger input.

4. Set the UUT rear panel REF INT/EXT switch to INT, and set the vertical controls of the Oscilloscope to display the UUT 10-MHz signal.

5. Set the Oscilloscope for external triggering, and adjust the timebase for 0.1 μs/div.

6. Adjust R230 for a drift of less than one cycle per second.

Section 4D
Troubleshooting and Repair

4D-1. INTRODUCTION

Usually, the Generator is most easily repaired by identifying the defective module and replacing it through the Module Exchange Program. Alternately, you may wish to troubleshoot down to the component level and replace the defective part. This section of the manual provides the necessary information for both repair methods.

After any module repair or replacement, the information and adjustments in the following paragraphs - particular to the module - should be completed, followed by the appropriate performance tests of the Generator. Signal Generator problems are generally caused by operator error, out-of-spec performance, or by catastrophic failure. The correction strategy is different in each case.

Although most operator errors are detected and indicated, some are not, and therefore, may be mistaken for an out-of-spec condition. Those operator errors that are detected are indicated with either a steady or flashing 'UNCAL' indicator. Consult the Generator Specifications in Table 1-1 and Section 2 in this manual for more information on Generator operation.

Out-of-spec performance is usually corrected by performing the appropriate adjustment procedure(s). Use the Performance Tests to determine which parameters need adjustment. Refer to adjustment paragraphs in this section for more information.

If the problem is not an operator error and is not corrected by adjustment, the Generator has a catastrophic failure. Then the task is to isolate the fault and make appropriate repairs. The UNCAL and self-test failure codes usually provide a good indication of the cause of the problem. Using the Performance Tests in this situation may help to determine which parameters are not affected.

4D-2. MODULE REPLACEMENT

This repair method involves identifying and replacing the problem module. The replacement module may be obtained using the Module Exchange Program or from your spare module stock, which may then be restored using the Module Exchange Program.

Use the information in the Troubleshooting section to diagnose the problem. To help you identify the problem module, you may call your local Fluke Technical Center for troubleshooting assistance. Once the Fluke service technician believes the problem module is identified, a replacement module can be shipped prepaid by an overnight air carrier.

After the operator verifies that the replacement module corrects the problem, return the defective module using the shipping container and including the prepaid return shipping papers and label.

NOTE

The Attenuator, Output, and VCO assemblies are individually calibrated, and the correction data are stored in the associated calibration EPROMS.

CAUTION

If any of these assemblies needs calibration or if any non-field replaceable part needs repair, order a replacement using the Module Exchange Program.

To order a replacement module, use the part number for the assembly shown in Table 4D-1, and specify a Module Exchange part. The following paragraphs describe the available exchange modules, and how to adjust the Generator, if necessary, after installation. For removal procedures, refer to Access Procedures located in Section 4B of this manual.

Table 4D-1. Module Exchange Assemblies

A1A1	Display PCA	738609
A2A1	Synthesizer PCA	798173
A2A2	VCO PCA	798017
A2A4	Output PCA	798157
A2A5	Attenuator/RPP Assembly	752667
A2A5A5	Relay Driver/RPP PCA	752816
A2A8	Non-Volatile Memory PCA	744094
A3A1	Power Supply PCA	744052
A3A3	IEEE-488 Interface Assembly	774562

4D-3. Power Supply PCA, A3A1

The Power Supply PCA comes complete with the 5V regulator, A1U3, its socket, and a set of insulated washers for all of the chassis-mounted regulators.

No adjustment is required after installation of the new PCA, but the power supply voltages should be verified, using the last step of the Power Supply Adjustment procedure in Section 4C of this manual.

4D-5. Synthesizer PCA, A2A1

After the new Synthesizer PCA has been installed, perform the FM CAL, VCO CLAMP, and 10-MHZ adjustments as described in the Synthesizer Adjustment Procedure in Section 4C of this manual. Perform any other adjustments related to the options.

4D-6. VCO PCA, A2A2

The VCO PCA comes with its associated VCO Calibration EPROM. This EPROM replaces the old one installed on the A2A7 Controller PCA (U23). After installing the new VCO PCA, the FM CAL and VCO CLAMP adjustments should be done. These adjustments are presented under the Synthesizer Adjustment procedure given in Section 4C of this manual.

A plug-in coupling capacitor is used to interconnect the VCO and Output PCAs, thus eliminating the need for a soldering iron when replacing this assembly.

4D-7. Output PCA, A2A4

The Output PCA comes with its associated Output Calibration EPROM (U24). This EPROM replaces the old one installed on the Controller PCA. After installing the new Output PCA, perform the Level DAC Offset, the RF Level, the Het Level, and the FM CAL Adjustment procedures given in Section 4C of this manual.

A plug-in coupling capacitor is used to interconnect the VCO and Output PCAs, eliminating the need for a soldering iron when replacing this assembly.

4D-8. Controller PCA, A2A7

The Controller PCA comes without the three calibration EPROMs. Therefore, it is necessary to move these EPROMs from the old to the new Controller. Remember to set the option status switch. No adjustments are required.

4D-9. Display PCA, A1A1

After installing a new Display PCA, perform the Modulation Indicator Adjustment given in Section 4C of this manual.

4D-10. Attenuator/RPP Assembly, A2A5

The Attenuator/RPP Assembly comes complete with the housing, Attenuator/RPP PCA, Relay Driver/RPP PCA, and a matching Attenuator Calibration EPROM. The matching EPROM replaces the Attenuator Calibration EPROM on the Controller PCA at reference location U26. After the new Attenuator/RPP assembly is installed, perform the RF Level Adjustment procedure on the A2A4 Output PCA as explained in the Calibration Adjustments section of this manual. If desired, the Relay Driver/RPP PCA can be ordered separately through Module Exchange, and no adjustments would be necessary.

4D-11. IEEE-488 Interface Assembly, A3A3

IEEE-488 Interface Assembly comes complete with panel, frame, and connector and is ready to plug in. No adjustments are required after installation.

4D-12. Non-Volatile Memory PCA, A2A8

The Non-Volatile Memory PCA requires soldering the unconnected battery terminal to the PCA prior to installation. The PCA requires no adjustment after installation.

4D-13. PARTS REPLACEMENT

An experienced technician should be able to isolate the defective component and replace it after reading the information presented in Section 3, the Theory of Operation and the troubleshooting information contained in this section. The Schematics are presented in Section 8 (Section 6 for the options) of this manual.

Most parts are replaced using ordinary methods. The parts requiring special attention are the chip components located on the A2A2 VCO PCA. The chip components should be

replaced using a 600° F soldering iron, such as an Ungar 50T7 with a number 76 heater and a number 88 tip, and 2% silver solder paste, such as Electro Science Fabrication SP - 37D1 or similar wire solder.

4D-14. TROUBLESHOOTING

To isolate a fault, it is important to note the conditions under which the symptoms are observed and if the symptoms change with different states of the instrument, such as different RF bands or levels, only when FM is on, only under remote control, etc.

If the symptom is a blank front panel or no response to keystrokes, the fault is most likely a digital problem or a power supply problem. If the power supply and cables are good, go to the digital troubleshooting paragraphs in this section.

If the front panel appears to function properly, but the RF output is abnormal or there is a flashing 'UNCAL' indication, the cause is likely an analog circuit problem (although it could be a control problem).

A properly operating front panel indicates that the majority of the Controller circuitry is functional. It is possible, however, that a digital control problem could exist and cause the RF output to be incorrect. If a digital problem is suspected, go to the Digital and Control troubleshooting paragraphs after checking the power supply.

4D-15. Service Special Functions

There are several special function self tests that can be used to assist the technician in troubleshooting the Generator. A few of the special functions used during troubleshooting are described in the following paragraphs. For a complete list of all special functions, see Table 2-4.

- Special Function 03, Display Check

The front panel displays can be checked any time by pressing the [SPCL] [0] [3] keys. When this is done the microprocessor lights all display segments. This test is terminated by pressing any key on the instrument.

- Special Function 04, Key Check

Check the normally open front panel keys by pressing the [SPCL] [0] [4] keys. For each key pressed, the code is displayed in the FREQUENCY display field. Pressing [CLR/LCL] key exits this check. The test will time out after approximately 8 seconds if no keys are pressed.

CAUTION

This special function is intended as a troubleshooting tool to check the operation of the digital circuitry and the latches on the analog assemblies. Since the Generator is programmed to an abnormal state, its output is turned off by programming full attenuation.

- Special Functions 83 Through 86 Alternate Attenuators

  Special functions 83 through 86 program alternate 24-dB Attenuators. The alternate 24-dB attenuators are normally used only when low levels are programmed too low to be verified with a power meter during service. These special functions allow the alternate attenuators, A242L through A245L, to be programmed one at a time, thus keeping the level high. The first 24-dB attenuator, denoted A241L, is automatically programmed for levels between -17.0 dBm and -11.1 dBm with AM off. These special functions allow the other attenuators, A242L through A245L, to be programmed in the same range.

These special functions also turn off relative amplitude, amplitude fixed range, and all modulation; and turn RF and level correction on. If the level is not in the specified range, -12 dBm will be programmed. Any new entry that normally programs the attenuators causes the default (normal) attenuators to be programmed.

4D-16. UNCAL Conditions

There are two hardware fault detectors, the unlock detector on the Synthesizer PCA, and the unleveled detector on the Output PCA. These two fault detectors are constantly monitored by the Controller, and if asserted, cause a flashing UNCAL indication. The detectors are also used during the self test to check the general operation of the Generator.

It is very important to interrogate and note the UNCAL code if there is an UNCAL indication.

If the unit has a UNCAL condition, interrogate the UNCAL code by pressing the [STATUS] key and interpret the code (see Table 2-5 in this manual). Take note if the code indicates that either UNLOK or UNLVL conditions have been asserted. Other codes denote overrange or underrange conditions (operator errors) that should be cleared but are not pertinent to troubleshooting.

Usually the unleveled UNCAL code indicates a problem on the Output PCA, whereas a unlocked UNCAL code indicates a problem on the Synthesizer PCA. Be aware that it is possible to have an Unleveled UNCAL condition due to a problem with the Synthesizer PCA that is not detected by the UNLOK detector.

It is a good idea to check for a different UNCAL code when other RF bands, levels or functions (FM or AM) are selected for a more complete analysis of the symptoms. For example, if the code indicates that UNLOK is asserted only with FM on, and not with FM off, it may be indicating an overmodulation condition. See Table 1-1. Signal Generator Specifications, for the FM limitations.

4D-17. Self Test/Error Codes Description

The self test is started whenever the Generator is turned on. It may also be started by [SPCL] [0][2]. If the Generator fails any of the self tests, the self-test failure report is displayed until any key is pressed. The self-test report can also be displayed by [SPCL] [1][1]. The report is presented in four fields as shown in Table 4D-2.

A minus sign in the Frequency Display indicates that the self test was aborted by a front panel entry.

The four groups (denoted by the A's, B's, C's and D's) in the self-test report correspond to different test categories. These tests are described below, including a tabulation of the Generator instrument state and the test codes that result if any test fails to achieve the expected result. Multiple error codes in one field are summed together.

Table 4D-2. Self Test Display Field

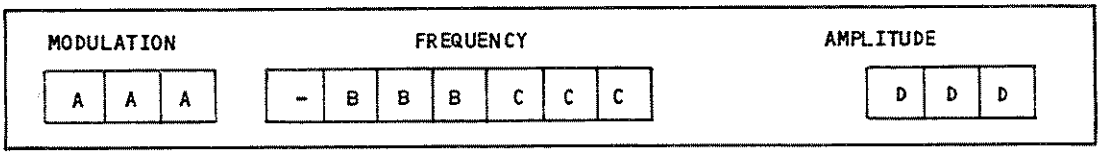

Example: Code 220 = 200 and 020.

Understanding how these tests are done can provide more meaning to the results and can assist in understanding how they relate to other symptoms. A successful self test is reported with all zeros.

During the self test, the step attenuator is programmed to maximum attenuation and the internal frequency reference is selected. The analog circuit tests make use of the unleveled (UNLVL) and unlocked (UNLOK) status detectors, whereas the digital circuit tests make use of write/read techniques.

4D-18. AAA FIELD

AAA is the result of the AM and FM tests. During these tests, level correction is applied. During the four AM tests, a normal AM depth, which should produce a leveled condition, and an abnormally high AM depth, which should provide an unleveled condition, is set for each modulation frequency. During the two FM tests, a normal FM deviation is set, which should produce a locked condition, and then an abnormally high deviation is set, which should produce an unlocked condition. Table 4D-3 shows the AAA Field AM and FM tests.

4D-19. BBB FIELD

BBB is the result of the synthesizer tests. In the first three test steps, the Synthesizer assembly's main PLL operation is verified by programming a large change in frequency. This should cause a momentary unlocked condition that should clear as the frequency settles to the new frequency.

Table 4D-3. AAA Field AM and FM Tests

AAA (CODE)	FREQ (MHZ)	LEVEL (DBM)	AM (%)	MOD FREQ (HZ)	KV DAC	FM DAC	FM RANGE	EXPECTED RESULT
001	1050	10.7	30	400	n/a	n/a	n/a	Leveled
002	1050	14	127	400	n/a	n/a	n/a	Unleveled
004	1050	10.7	30	1000	n/a	n/a	n/a	Leveled
010	1050	14	127	1000	n/a	n/a	n/a	Unleveled
020	280	-10	n/a	400	Normal	1023	4	Locked
040	280	-10	n/a	400	1023	1023	4	Unlocked

In the next three steps, the synthesizer is checked by programming 225 MHz, which is outside the normal operating frequency range, and should result in an unlocked condition. Then 385 MHz is programmed, which should result in a locked condition. Next 550 MHz is programmed, which is again outside the normal range, and should result in unlocked condition.

Finally, all frequency reference circuitry is turned off, which should produce an unlocked condition, and then turned on, which should produce a locked condition. Table 4D-4 shows the BBB Field test results.

4D-20. CCC FIELD

CCC is the result of the digital tests. The IEEE-488 is verified by writing data to the IEEE-488 chip, A3A3U1, then by reading it back and checking for the expected response. Each memory location of the Non-Volatile RAM is checked with a checksum.

Table 4D-4. BBB Field Test Results

BBB (CODE)	SYNTH. FREQ. (MHZ)	MAX. WAIT (MS)	XOENL BIT	EXPECTED RESULT
001	245	120	0	Locked
002	525	5	0	Unlocked
004	525	95	0	Locked
010	225	120	0	Unlocked
020	385	120	0	Locked
040	550	120	0	Unlocked
100	385	120	1	Unlocked
200	385	200	0	Locked

The Generator RAM is verified by writing data to each memory location and checking that the same data can be read back. Both the off-chip RAM (U25) and the on-chip RAM (U1) are tested in this manner. The RAM test is only done during the power-on self test. The data in each of the three calibration EPROMs; VCO (U23), Output (U24), and Attenuator (U26), are summed and compared with a checksum.

The data in each word of the two program EPROMs (U21, 22) are successively summed and rotated by two. The result of this procedure is compared with a checksum for each EPROM. Table 4D-5 shows the CCC field results.

4D-21. DDD FIELD

DDD is the result of the Output filter tests. During these tests, the level is programmed to +13.0 dBm with level correction applied. The low-pass filters on the A2A4 Output assembly are tested by setting the frequency near the high end of each of the four half-octave non-het bands and checking for a leveled condition. Then, the frequency is set above the cutoff frequencies of two of the filters, and the output is checked for an unleveled condition. Table 4D-6 shows the DDD field Results.

Table 4D-5. CCC Field Test Results

CCC (CODE)	DIGITAL TEST
001	IEEE-488 test
002	Non-volatile memory test
004	RAM test
010	Attenuator calibration EPROM checksum
020	Output calibration EPROM checksum
040	Synthesizer calibration EPROM checksum
100	Lower program EPROM checksum
200	Upper program EPROM checksum

Table 4D-6. DDD Field Test Results

DDD (CODE)	FREQ (MHZ)	MIDL	HAOCTH	EXPECTED RESULT
001	349.99999	0	1	leveled
002	511.99999	0	0	leveled
004	729.99999	1	0	leveled
010	1050.00000	1	1	leveled
020	490.00000	0	1	unleveled
040	1024.00000	1	0	unleveled

Table 4D-7. Band, Filter, and Frequency Programming Data

OUTPUT FREQUENCY (F_o)	MIDL	HAOCTH	HETL	SHETH	SYNTH. FREQ (F_s)
0.01 - 244.99999 MHz	1	1	0	1	(800 + F_o)/ 2
245 - 349.99999 MHz	0	1	1	0	F_o
350 - 511.99999 MHz	0	0	1	0	F_o
512 - 729.99999 MHz	1	0	1	0	F_o / 2
730 - 1050.00000 MHz	1	1	1	0	F_o / 2
1 = TTL High 0 = TTL Low					

4D-22. Check Output Signal

At this point, check the Generator output signal with a Spectrum Analyzer or a Counter at various frequencies on each of the three RF bands and at the state where an UNCAL condition exists. If the frequency is incorrect or erratic, check the power supply first. Go to the Synthesizer troubleshooting paragraphs if the power supply functions properly. Table 4D-7 shows the band, filter, and frequency programming data for the output frequency (at the source).

4D-23. Auxiliary Power Supply

The Auxiliary Power Supply consists of the A3A1 Power Supply PCA and the A3A2T1 transformer mounted together with a bracket. The power supply is electrically preadjusted and needs no adjustment after installation.

The Spectrum Analyzer can also be used to check to see if the modulation functions are generally working. If a modulation problem exists, go to the appropriate AM or FM troubleshooting paragraphs after checking the power supply.

If the frequency is stable and correct, but the output level is abnormal, the problem is most likely in the Output PCA. Check the power supply; then go to the Level Troubleshooting paragraphs in this section of the manual.

Armed with a clear knowledge of the symptoms and the conditions under which the UUT fails, the next task is to isolate the problem. Remove the top and bottom instrument covers and visually inspect the interior for loose cables, connectors, etc. Also be alert for the characteristic odor of burned resistors, etc.

WARNING

DO NOT INTERRUPT THE PROTECTIVE GROUNDING CONNECTION. TO DO SO WOULD CREATE A POTENTIAL SHOCK HAZARD THAT COULD RESULT IN PERSONAL INJURY. SECURE THE INSTRUMENT AGAINST UNINTENDED OPERATION IF IT IS LIKELY THAT THIS PROTECTION HAS BEEN IMPAIRED. USE ONLY 250V FUSES OF THE PROPER CURRENT RATING.

WARNING

BECAUSE THE PROCEDURES DESCRIBED HERE ARE DONE WITH POWER APPLIED TO THE SIGNAL GENERATOR AND WITH PROTECTIVE COVERS REMOVED, TESTING SHOULD BE DONE ONLY BY TRAINED SERVICE PERSONNEL WHO UNDERSTAND THE HAZARDS INVOLVED.

CAUTION

To prevent damage to the Generator, turn off the instrument before removing any PCAs.

4D-24. Check Power Supply Voltages

CAUTION

To prevent damage to the Generator, turn off the instrument before disconnecting any power distribution cables.

Check all power supply voltages. Table 4D-8 gives the expected dc and ripple voltages at key test points. If one supply voltage is unusually low, this could indicate an abnormal load on that supply due to a fault. To isolate the fault, check the abnormal voltage before and after disconnecting (one at a time) the power cable to the Controller, Synthesizer, Attenuator, and the cable from the Controller to the front panel.

Table 4D-8 lists the typically dc and ripple voltages (relative to ground connection on the module plate) at the key test points of the A3A1 Power Supply PCA. These characteristics apply for [RCL] [9][8].

The unregulated dc and ripple voltages are those expected with a line voltage of 120V ac at 60 Hz. The dc voltages are expected values as measured with a digital voltmeter with respect to the power supply ground connection on the module plate.

The ripple voltages are expected values as measured with an oscilloscope with respect to the power supply ground connection on the module plate, and are the peak-to-peak values of the 120-Hz waveform.

The characteristics of the unregulated +18V relay supply depend directly on the line voltage and the load (the state of the instrument). For example; at 120V ac:

- At 50 MHz and 13 dBm, Vdc is typically 19.0V with .25V (peak-to-peak) ripple.
- At 50 MHz and RF off, Vdc is typically 20.0V with 0V ripple.

Table 4D-8. Power Supply Characteristics

SUPPLY	UNREGULATED VOLTAGES			REGULATED VOLTAGES		
	@TP	V dc	Ripple(Vpp)	@TP	V dc	Ripple(mVpp)
+37	9	47	0.5	5	36.9 to 37.1	2
+15 Syn	7	22	0.5	11	14.5 to 15.7	0.5
+15 Out				3	" "	"
-15	8	-23	0.2	2	-14.5 to -15.7	"
+5	10	9	1	4	4.75 to 5.25	1
+18	1	23	0.35	None	None	None

4D-25. DIGITAL AND CONTROL TROUBLESHOOTING

If the symptoms indicate a digital or control problem, the following suggestions may help you isolate the fault to a particular functional circuit. In this manual, refer to the schematic diagrams in Section 8, and refer to Section 3 for the Theory of Operation.

First, verify that all assemblies are receiving the correct voltages from the power supply.

The most obvious symptom of failure in the Controller assembly is a blank front panel. A properly operating front panel indicates that most of the Controller circuitry is functional. If the front panel is totally blank or unresponsive to any keystrokes, the microprocessor kernel should be checked first. See the paragraphs entitled Microprocessor Kernel in this section.

If the front panel is operating correctly but the RF output is incorrect, determine if the fault is on the Controller side of connector P101. The control to most of the audio and RF analog circuitry passes through P101 via buffers U15 and U16 on the A2A7 Controller PCA.

4D-26. Control Activity

This can be checked by verifying data activity on the data and address lines of P101. Program the bright digit for 100-Hz resolution in the FREQUENCY display. While pressing the EDIT [↵] key, observe with an oscilloscope the activity on P101. Pressing one of the EDIT keys sends bursts of frequency and level control data through the buffers.

Although it is difficult to determine if the data, (BD0-7) and address (BAB0-2) signals on P101 are valid at any given time, the most common failures seen at this point are totally inactive signals. Between bursts, the data and address signals are in the high impedance state (tri-stated). Be careful not to confuse this high impedance state with total inactivity. Observing these signals on a known good unit may be helpful.

If signals are found to be totally inactive, inspect the buffer control signals on U15 (pin 1), and U16 (pins 1 and 19) of the A2A7 Controller PCA. If the buffer control signals are active, check the buffer inputs that correspond to the inactive outputs. If the inputs show activity, replace the buffer and again check the signals. If, however, the inputs to the buffers are also inactive, trace the signals back and determine the fault location.

If all data and address signals show activity and their timing roughly corresponds to the select signals BSEL0L and BSEL1L, assume for now that the Controller is sending the correct data and continue on.

4D-27. Latch Control

Use the [SPCL][1][5] keys to check each available latch on the RF circuit boards to verify that the correct data is reaching them. Passing this test is a good indication that the fault is not in the Controller.

If an IEEE-488 Bus Controller is available, additional bit-level control of the hardware is available by using the monitor commands (see Section 2). These commands allow you to directly program the DACs, or read and write data to any desired location.

4D-28. Microprocessor Kernel

Connect an oscilloscope probe to the external clock input of A2A7 U1 pin 2. There should be a symmetrical 10-MHz square wave with an adequate TTL logic level. If the

signal deviates from this description, refer to Section 3, Theory of Operation, in this manual to assist you in troubleshooting the clock oscillator circuit.

4D-29. Power Reset

Connect an oscilloscope probe to the RESET input (pin 22) of U1. The signal should generate a low to high transition on power-up and remain high during normal operation. Turning the power on and off generates active low reset pulses to U1. If a problem with the reset circuit is suspected, refer to Section 3, Theory of Operation, and troubleshoot the reset circuitry.

4D-30. Microprocessor Inputs

Input pins to U1, CRUIN (pin 13) , INT1 (pin 15), HOLD (pin 18), NMI (pin 21), and READY (pin 23), should all be high. If any of these signals are not high, correct the fault before continuing on.

4D-31. IEEE-488 Interrupt

Verify that the IEEE-488 Interface interrupt signal, IEINTL, is in the inactive (high) state. If IEINTL is active, either troubleshoot the interface to the IEEE-488 Interface PCA, or temporarily bend out pin 14 of U1 and tie it to +5V.

After completing the above steps, there should be activity on the address, data, and control lines as the microprocessor executes instructions.

4D-32. Microprocessor Bus

The dynamic nature of microprocessor bus circuitry makes it very difficult to verify the data transmitted at any given time. However, most common bus faults show recognizable symptoms. Look at each of the data (D0 to D7), address (A0 to A15), and bus control (CLKOUT, DBINL, WEL, MEML) signals with an oscilloscope.

Suspect inactive signals or signals that enter invalid logic states. Also compare the driver inputs and outputs of buffered signals. A combination of observation and experience is helpful here. An ohmmeter or a pulse generator may be useful in further investigating suspected signals.

4D-33. Address Decoder

Several levels of address decoding are used to select all the memory and I/O devices. The inputs to the address decoders come from the buses and present challenges similar to troubleshooting the buses. A suggested approach is to first choose a decoding path to a particular device or group of devices. Start at the highest level of decoding, and one at a time verify that each part in the path is good.

4D-34. Display and Controls

If the display shows signs of activity, but has missing or bright digits or segments, the problem is most likely in U18 on the A2A7 Controller PCA or on one of the data latches or drivers on the A1A1 Display PCA. If the display is blank and the Controller is operational, check the various power supplies and the display blanking circuitry on the A1A1 Display PCA.

Two special function-service tests are available to test the front panel indicators and keys. [SPCL] [0][3] keys check the front panel displays by lighting all segments. This test is aborted by pressing any key on the Generator.

The [SPCL] [0][4] keys allow all normally open keys to be checked. As each key is pressed, its row and column address is displayed in the center of the FREQUENCY display field. See Table 4D-9 for the address codes for each key. This test is exited by a clear entry.

Table 4D-9. Address Codes for the Front Panel Keys

KEY	CODE
[EXTAM]	1
[EXTFM]	2
[INTAM]	4
[INTFM]	5
[400/1000]	6
[FREQ]	9
[AMPL]	10
[AM]	11
[FM]	12
[SPCL]	13
[STEP]	14
[7]	15
[4]	16
[1]	17
[0]	18
[STO]	19
[8]	20
[5]	21
[2]	22
[.]	23
[RCL]	24
[9]	25
[6]	26
[3]	27
[-]	28
[SEQ]	29
[MHz|V]	30
[kHz|V]	31
[Hz|uV]	32
STEP[v]	33
[dB(m)]	34
[%]	35
[CLR|LCL]	(Exit Test)
STEP[↑]	37
EDIT[←]	38
EDIT[↑]	40
EDIT[↓]	41
EDIT[→]	43
[STATUS]	45
RF[ON/OFF]	46

4D-35. SYNTHESIZER TROUBLESHOOTING

NOTE

All frequencies mentioned are synthesized; hence they are exact (coherent with the 10-MHz reference), unless noted as approximate.

If the Generator level is inaccurate or an unleveled condition exists, then the A2A4 Output PCA is probably at fault. If an unlock condition exists, the problem is in the A2A1 Synthesizer PCA. If the output frequency is in error or erratic, there is likely a problem with the A2A1 Synthesizer PCA. However, if the unlocked condition only occurs when using an external reference, the problem is probably in the Sub-Harmonic Reference circuitry.

If the unlocked condition exists with REF INT/EXT set to INT, be sure no signal is applied to the REF IN connector. An external signal applied (while operating on internal reference) can cause the main loop to unlock.

Next, check to see if the Generator frequency is stuck high or low. A good way to do this is to check the dc voltage at TP44. If it is around 1.5V, go to the Reference Circuitry Check in the following paragraphs.

If the voltage is around 22V, the problem is associated with the main PLL, i.e., VCO, UHF binary divider, buffer amplifier, SSB mixer, triple-modulus prescaler, or N-Divider.

Table 4D-10 shows the characteristics of the signals at the various test points on the Synthesizer PCA. The range of the signal and the expected value for a typical instrument state are given. The values in the TYPICAL column are for the UUT programmed to 160.11999 MHz, INT FM on at 1 kHz, and 99.9 kHz deviation.

4D-36. Reference Circuitry Check

There should be a 10-MHz square wave at U55 pin 12. If there is no signal at this point, the problem is in the internal 10-MHz crystal oscillator. The frequency should change as R230 is adjusted. The DC voltage at TP 57 should vary from 4 to 6 volts as R230 is adjusted. If there is an external signal connected, with the switch set to EXT, there should be a TTL signal at U67 pin 11. The same signal should appear at U68 pin 3. If either of the enhanced stability options is present, with the switch set to INT, there should also be a 10 MHz TTL signal at U68 pin 3. If the loop is locked, there should be a stable DC voltage at the output of the loop amp, U69 pin 6.

Table 4D-11 shows the relationship between various reference frequency configurations and the control of the reference circuitry.

4D-37. Main Phase Lock Loop

If the voltage at TP44 is around 22V, connect a variable power supply to TP41. This allows the frequency of the VCO to be controlled directly. Use a Spectrum Analyzer or Counter to monitor the Generator output.

Program the UUT to 640 MHz. If the power supply can be adjusted to obtain an output frequency of about 640 MHz, the VCO is probably OK; proceed to the next paragraph. If the power supply cannot be adjusted to obtain about 640 MHz output frequency, troubleshoot the VCO or the circuitry between TP41 and TP44.

Table 4D-10. Synthesizer PCA Test Points

TEST POINT	SIGNAL TYPE	RANGE	TYPICAL	FUNCTION
TP1	RF	245 to 525 MHz	480.059995 MHz; -7 dBm	All frequency digits
TP2	GROUND			
TP3	RF	245 to 525 MHz	480.059995 MHz; +4 dBm	All frequency digits
TP7	GROUND			
TP11	TTL	20 to 39.995 kHz	39.995 kHz	10-K, 1-K, 100-, and 10-Hz Digits
TP12	TTL	1 to 1.99975 MHz	1.99975 MHz	10-K, 1-K, 100-, and 10-Hz Digits
TP13	GROUND			
TP14	TTL	1 MHz (AL)	1 MHz	1-MHz and lower digits
TP15	TTL	0.02 to 1 MHz	20 kHz	
TP16	TTL	12 to 26 MHz	24 MHz	All frequency digits
TP17	RF	245 to 525 MHz	480.02 MHz; -17 dBm	All frequency digits
TP22	AUDIO	0 to 0.7V rms	0.68V rms	FM Deviation
TP23	GROUND			
TP24	TTL	20 MHz, 12.5 ns (AH)	20 MHz	
TP25	TTL	20 MHz, 12.5 ns (AH)	20 MHz	
TP26	GROUND			
TP27	TTL	10 to 19.9975 MHz	19.9975 MHz	10-K, 1-K, 100- and 10-Hz Digits
TP31	GROUND			
TP32	AUDIO	0 to 0.8V rms	0.31V rms	FM Deviation, and Frequency
TP33	AUDIO	0 to 0.8V rms	0.31V rms	FM Deviation, and Frequency
TP34	DC	28 ±0.5V	28V dc	
TP35	TTL	1 MHz	1 MHz	1-MHz Reference
TP36	GROUND			
TP37	DC	-1 to -6v	-2.5V dc	Frequency
TP38	TTL	1 MHz 200 ns (AH)	1 MHz 200 ns	
TP39	TTL	1 MHz 10 ns (AL)	1 MHz 10 ns	
TP40	DC	2 to 22V	10.2V dc	Frequency
TP41	DC	2 to 22V	9.7V dc	Frequency
TP42	GROUND			
TP43	DC	2 to 22V	9.7V dc	Frequency
TP44	DC	2 to 22V	8.6V dc	Frequency
TP45	GROUND			
TP46	TTL	low = unlocked high = locked	TTL high	
TP49	TTL	10 MHz 20 ns (AL)	10 MHz, 20 nS	
TP50	TTL	10 MHz	10 MHz	
TP51	GROUND			
TP52	TTL	10 MHz 10 ns (AL)	10 MHz, 10 nS	
TP53	DC	7.5 ±1V		Above 245 MHz
		16 ±2v	16V dc	Below 245 MHz
TP54	TTL	10 MHz	10 MHz	
TP55	RF	800 MHz	800 MHz; -10 dBm	Below 245 MHz
TP56	INPUT			To test low-pass filters

NOTE: AH = active high
AL = active low

Table 4D-11. Frequency Reference Control

OPTION INSTALLED		BIT	
HIGH- OR MEDIUM-STABILITY	INT/EXT	RMUXOH	SHENL
NO	INT	0	1
	EXT	0	0
YES	INT	1	1
	EXT	0	0
1 = TTL High 0 = TTL Low			

Program the UUT to 320 MHz. If you can adjust the power supply to obtain about 320 MHz output from the VCO, the VCO and binary divider are probably OK; proceed to paragraph 4D-41. If you cannot change the frequency, the problem is either the VCO, or the UHF binary divider, U1.

Check the signal at TP1. It should be the same as the output frequency. The level after the buffer amplifier, Q3, Q4, at TP3 (use RF test cable) should be approximately +3 dBm. The signal at TP17 should be a signal sideband signal with the lower sideband component (the desired signal) at about -20 dBm. If the only signal is the carrier frequency (same frequency as TP3), check the quadrature generator, and the sub-synthesizer circuitry. The signal out of the triple-modulus pre scalar should be approximately 16 MHz (with the output frequency set to approximately 320 MHz). The output of the N-Divider, TP14, should be approximately 1 MHz.

As the UUT frequency is programmed, the frequency at TP14 should change, since the divide ratio is being changed. If the frequency is not 1 MHz and/or it doesn't change, the problem is probably with the N-Divider gate array, U17, or the interface to the microprocessor.

If both the reference (at TP35) and the N-Divider signals at the phase detector are 1 MHz, the loop should lock when the operator removes the variable power supply. If the loop does not lock, check the KNV voltage at TP37. With the Signal Generator programmed to 320 MHz, TP37 should be approximately -2 to -3V. If this voltage is not correct, check the DAC U27, latches U26 and U30, and op-amp U28. This voltage should also change as the operator changes the Generator frequency.

If the KN DAC appears to function, the problem is with the phase detector. Reconnect the variable power supply as before, and adjust the voltage for a approximately 1-MHz signal at U44 pin 3. With this frequency slightly above 1 MHz, TP38 should be high and TP39 should be low.

With this frequency slightly below 1 MHz, TP38 should be low and TP39 should be high. The only remaining circuitry is the loop amp U48 and the current source, U46, Q18, and Q19.

If the loop is locked, but the 1-MHz, 10-MHz, or 100-MHz digits cannot be programmed, the problem is either the N-divider or the interface to the microprocessor. If the 100-kHz

or 10-kHz digit is inoperative or the frequency jumps as the 1-MHz digit is programmed, the problem is likely the triple-modulus prescalar. If the lower order (1-kHz, 100-Hz, 10-Hz) digits cannot be programmed, the problem is the sub-synthesizer or single sideband mixer.

4D-38. Sub-Synthesizer and HET (800 MHz), 40-MHz Loop

The frequency at TP24 and TP25 should be 20 MHz. The frequency at U64 pins 14 and 15 should be 40 MHz. If the 40-MHz signal is present, but not the 20 MHz, the problem is most likely with Q4, Q5, U35, or U34. If the 40-MHz signal is in error, the problem is in the 40-MHz loop.

Check the frequency at the 40-MHz VCO, U64 pin 3. It should be 40 MHz. If it is not, lift the op-amp end of R169, and connect it to a variable power supply set to approximately 6V. The signal at U64 pin 3 should be approximately a 40-MHz ECL level (approximately 3.2V to 4.2V) signal. By varying the supply voltage, the frequency should change. A similar signal should be present at U64 pin 2. Check to see if U64 pin 11 is ECL low (approximately 3.2V).

The output of TTL buffer U65 pin 8 should be approximately 40 MHz. The output of the divide-by-4, U66, should be approximately 10 MHz. Once again, if the frequency is greater than 10 MHz, pulses should exist at TP52 and the output of op-amp U60 pin 6 should be low. If the frequency is below 10 MHz, pulses should exist at TP49, and the op-amp should be high (approximately 24V). The loop should lock when the operator reconnects R169.

If the TP checks are all right and the 800-MHz oscillator is not locked when in the HET band, the problem is either with the 800-MHz VCO, the divide-by-4 (U61), the divide-by-5 (U62, U63), or the logic that controls the switched +5V.

Program the UUT to 320 MHz. The frequency at TP27 (the output of the sub-synthesizer gate array U33) should be 10 MHz if the input signals are correct. The frequency at TP12 should be 1 MHz, and TP11 should be 20 kHz. There should be a 20-kHz sine wave at the hot end of R33. The signals at the output of the active quadrature generator, U10 pin 8 and U10 pin 14 should be approximately 300 mv p-p sine waves that are 90° apart in phase. Use a dual-trace Oscilloscope for verification.

The frequency at TP27 should change 500 kHz for a 1-kHz change in the programmed frequency, and 50 kHz for a 100-Hz change, etc.

4D-39. FM Circuitry

Program the UUT to 500 MHz, INT FM, 99.9-kHz deviation, and 1-kHz modulation frequency. There should be a 2V p-p 1-kHz sine wave at TP22. Program 50-kHz deviation, and the level should drop to 1V p-p. Reprogram the deviation to 99.9-kHz. The level of the output of the KV DAC, U28 pin 7 will be approximately 0.9V p-p depending on the FM correction value (KV) in the EPROM.

The signals at TP32 and TP33 should be approximately the same, depending on how R87 is set. The output of the audio integrator should be about 1V p-p. To check the FM range, program the UUT to 9.99-kHz deviation. The ac voltage at TP32 should drop to 10% of the 99.9-kHz value. Program 999-Hz, and the voltage should drop to 1% of the 99.9-kHz value.

The INT/EXT FM selection is done on the A2A4 Output PCA. The controls are listed in Table 4D-17.

Tables 4D-12 and 4D-13 provide FM range and FM DAC (10 bits) control information.

Table 4D-12. FM Ranges

FM DEVIATION (Hz)	FM DEVIATION WITH LOW-RATE FM OPTION (Hz)	FMRN
0 - 999	0 - 99.9	1
1000 - 9990	100 - 999	2
10000 - 99900	1000 - 9,990	4

Table 4D-13. FM DAC Control

FM DEVIATION (Hz)	FM DEVIATION WITH LOW RATE FM OPTION (Hz)	FM 0 - 9 (Bits)
	0 - 99.9	FM Deviation /.1
0 - 999	100 - 999	FM Deviation
1000 - 9990	1000 - 9,990	FM Deviation /10
10000 - 99900		FM Deviation /100

4D-40. LEVEL TROUBLESHOOTING

If the Generator level is inaccurate or an unleveled condition exists, the A2A5 Output assembly or the A2A6 Attenuator assembly is probably at fault. If an unleveled condition exists, the problem is in the circuitry ahead of the detector. Go to the paragraph in this section entitled Unleveled Condition.

If there is no unleveled condition, the problem is likely in the circuitry following the ALC Loop, which includes the Attenuator/RPP, the heterodyne circuit, and the output amplifier, Q215. If the level problem only exists below 245 MHz, then troubleshoot the heterodyne circuitry. If the problem is not frequency dependent and if the level is accurate above +7 dBm but inaccurate below +7 dBm, then the A2A5 Attenuator/RPP is at fault.

4D-41. Output Assembly Test Point Signal Information

Table 4D-14 presents the nominal characteristics of the signals at the various test points on the Output PCA. Not only the range of the signal, but also the expected value for the Instrument Preset State [RCL] [9][8], are given.

4D-42. ATTENUATOR LEVEL CONTROL

Table 4D-15 lists the A2A5 Attenuator/RPP Assembly sections that are inserted in the RF output path for the various level ranges of the generator. This information is useful in isolating a faulty section. The sections are labeled by the control line mnemonics at latch U27 on the Controller PCA. Note that the section is inserted in the RF output path when there is no power applied to the relay.

If the Level problem exists above +7 dBm, the through path (0 dB attenuation) of the Attenuator may be faulty.

4D-43. Attenuator Check

Attenuator problems are most likely to be relay contact problems.

To isolate the faulty attenuator section, connect a power meter to the RF OUTPUT connector, and check the nominal levels per Table 4D-16 at both 0.2-MHz and 1050-MHz frequency.

Table 4D-14. Output PCA Test Points

TEST POINT	SIGNAL TYPE	RANGE	TYPICAL FOR RCL 98	SIGNAL DESCRIPTION
TP1	RF	245 to 1050 MHz -18 to -32 dBm	300 MHz -27 dBm	Output of mid/high bandswitch.
TP2	RF	245 to 1050 MHz -10 to -25 dBm	300 MHz -20 dBm	Output of buffer amplifier.
TP3	RF	245 to 1050 MHz -13 to -28 dBm	300 MHz -22 dBm	Output of switched low-pass filters.
TP4	RF	245 to 1050 MHz -13 to -33 dBm	300 MHz -22 dBm	Power-splitter output.
TP5	RF	800 MHz -8 dBm	No signal	Het mixer LO signal
TP6	dc+audio	-7 to 14V dc nominal	3.1V dc	Modulator control voltage.
TP7	dc+audio	0.04 to 3.0V dc nominal	1.2V dc	Leveling loop control voltage.
TP8	dc+audio	0 to 2V dc nominal	0.63V dc	Detector diode voltage.
TP9	dc+audio	400 or 1000 Hz, 0.71V rms	400 Hz 0.71V rms	Modulation Oscillator output.
TP10	Ground			
TP11	dc+audio	0 to 0.70V rms	0V	FM modulation signal to Synthesizer.

The through-path operation of the A2A5 Attenuator/RPP Assembly can be roughly checked by removing the instrument and module bottom covers. Program the frequency to 1 MHz and the level to +13 dBm. Measure (with a high-impedance probe and an RF voltmeter or an oscilloscope) the level at P102 of the A2A4 Output PCA with a power meter connected to the RF OUTPUT connector. If the voltmeter measures a nominal 1V rms, but the power meter does not read +13 dBm, then the signal is not getting through the A2A5A4 Attenuator/RPP PCA, and the A2A5 Attenuator/RPP Assembly is at fault.

If the level problem is subtle rather than catastrophic, a more accurate check is required to determine if the fault is the A2A5 Attenuator/RPP Assembly or the Output PCA. Such a check is made by removing the A2A5 Attenuator/RPP Assembly, attaching an adapter (6060A-4234; P/N 744177) to the interconnect point, and making power meter measurements of the A2A4 Output PCA. Use [SPCL] [8][2] to disable the Attenuator correction factors. The level at this point should be flat over 0.4 to 1050 MHz within typically 0.2 dB and should agree with the programmed level within 2 dB.

If the problem has been isolated to the Output PCA and there are no self-test errors or flashing UNCAL condition, the problem is probably in the circuits following the ALC loop. If the problem is only in the Het band (frequency <245 MHz), check the Het band switch and controls, the Het band circuits (mixer, filter, and amplifier), and the local oscillator signal (800 MHz, nominal -10 dBm at TP5). If the problem is at all frequencies, check the output amp, Q215, and the Het/function switch and controls.

Table 4D-15. Attenuator Level Control

AMPLITUDE RANGE IN DBM				ATTENUATOR SECTIONS INSERTED INDICATED BY X						
AM Off		AM On		A6DBL	A12DBL	A241L	A242L	A243L	A244L	A245L
7.0	19.0	1.0	9.0							
1.0	6.9	-5.0	0.9	X						
-5.0	0.9	-11.0	-5.1		X					
-11.0	-5.1	-17.0	-11.1	X	X					
-17.0	-11.1	-23.1	-17.1			X				
-23.1	-17.1	-29.1	-23.2	X		X				
-29.1	-23.2	-35.1	-29.2		X	X				
-35.1	-29.2	-41.1	-35.2	X	X	X				
-41.1	-35.2	-47.1	-41.2			X	X			
-47.1	-41.2	-53.2	-47.2	X		X	X			
-53.2	-47.2	-59.2	-53.3		X	X	X			
-59.2	-53.3	-65.2	-59.3	X	X	X	X			
-65.2	-59.3	-71.2	-65.3			X	X	X		
-71.2	-65.3	-77.2	-71.3	X		X	X	X		
-77.2	-71.3	-83.3	-77.3		X	X	X	X		
-83.3	-77.3	-89.3	-83.4	X	X	X	X	X		
-89.3	-83.4	-95.3	-89.4			X	X	X	X	
-95.3	-89.4	-101.3	-95.4	X		X	X	X	X	
-101.3	-95.4	-107.4	-101.4		X	X	X	X	X	
-107.4	-101.4	-113.4	-107.5	X	X	X	X	X	X	
-113.4	-107.5	-119.4	-113.5			X	X	X	X	X
-119.4	-113.5	-125.4	-119.5	X		X	X	X	X	X
-125.4	-119.5	-131.4	-125.5		X	X	X	X	X	X
-147.0	-125.5	-147.0	-131.5	X	X	X	X	X	X	X

Table 4D-16. Attenuator Levels

ATTENUATOR	PROG LEVEL	SPECIAL FUNCTION	OBSERVED LEVEL (NOMINAL)
6dB	+6dBm	--	+6dBm
12dB	0dBm	--	0dBm
24dB £1	-12dBm	--	-12dBm
24dB £2	-12dBm	83	-12dBm
24dB £3	-12dBm	84	-12dBm
24dB £4	-12dBm	85	-12dBm
24dB £5	-12dBm	86	-12dBm

4D-44. Unleveled Condition

If there are self-test failures and/or unleveled indications, the problem is probably in, or prior to, the ALC loop. If the problem is isolated to a specific frequency band (or bands) and other bands work properly, check signal inputs and controls to the various filters that precede the modulator. See Table 4D-7 Band, Filter, and Frequency Data for band definition. If all frequency bands are affected, the leveling ALC loop or associated controls and inputs are probably at fault.

TP6 (modulator control voltage) is a good place to monitor. With the instrument programmed to +13 dBm, the voltage on TP6 should be between +2V and +8V dc (+4V to +5V dc typical). Another place to monitor is TP7 (ALC control voltage). With the instrument programmed to +13 dBm, and the level correction disabled [SPCL][8][1], the

voltage here should be approximately 1.6V dc. With the RF off, the voltage at TP7 should be 0V dc.

When the problem is isolated to a specific area, use the schematic, Theory of Operation, Test Point Chart, and normal troubleshooting techniques to isolate the fault.

4D-45. AM TROUBLESHOOTING

The following paragraphs provide information that help the operator to trace an AM problem to a specific circuit on the A2A4 Output PCA.

4D-46. Internal/External AM

If an AM problem exists, determine if the problem occurs with internal AM, external AM or both. This check is done by connecting a 1V peak (2V p-p), 1-kHz signal source to the external MOD INPUT of the UUT and measuring AM depth. Use a Modulation Analyzer. Program the UUT to external AM and then to internal AM at 1-kHz internal modulation rate. The measured AM should agree with the programmed depth within a few percent.

Tables 4D-17 and 4D-18 provide control information for modulation and modulation frequency selection.

If the internal AM does not agree, but external AM is Ok, the Modulation Oscillator is likely at fault. If external AM is bad, but internal AM is Ok, then the problem is somewhere between the external MOD INPUT and the AM DAC.

If both the external and internal AM fail, the problem is likely being caused by either the modulation signal-processing circuit or the leveling loop. To determine which circuit is faulty, perform the following test.

Table 4D-17. Modulation ON/OFF Control

INT AM	EXT AM	INTAML	EXTAML	
Off	Off	1	1	
Off	On	1	0	
On	Off	0	1	
On	On	0	0	
INT FM	**EXT FM**	**INTFML**	**EXTFML**	**FMENH**
Off	Off	1	1	0
Off	On	1	0	1
On	Off	0	1	1
On	On	0	0	1
1 = TTL High 0 = TTL Low				

Table 4D-18. Modulation Frequency Control

FREQUENCY	MF400L
400 Hz	0
1 kHz	1
1 = TTL High 0 = TTL Low	

4D-47. ALC Loop Control Voltage

PROCEDURE

1. Connect a 1V peak (2V p-p), 1-kHz signal source to the external MOD INPUT.
2. Program the UUT for 350 MHz, 7 dBm, 71% AM depth, and EXT AM ON.
3. Measure the ac and the dc voltage at TP7. The rms voltage should be nominally 50% of the dc voltage.
4. Program the UUT for 35% AM depth. The rms voltage should be nominally 25% of the dc voltage.

If the UUT fails this test, the problem lies somewhere between the EXT MOD input and TP7 (ALC loop-control voltage). To further localize the problem, the same test can be done by measuring the ac voltage at U302 pin 8 (input to level DAC). If the measured ac voltage does not change as programmed AM depth is changed, either the AM DAC or its control is at fault. The AM DAC (A2A4U301) is an 8-bit DAC and is set to twice the programmed AM depth, e.g., 180 for 90% AM.

If the UUT passes this test, then the ALC loop control voltage is correct, and the problem is in the ALC loop. A likely cause of excessive AM depth error and harmonic distortion is detector non-linearity. The following test checks detector linearity.

4D-48. Detector Linearity

PROCEDURE

1. Install the plate covers and let the UUT warm up at room temperature for one hour.
2. Program the UUT for 350 MHz, 12 dBm, modulation OFF.
3. Program [SPCL] [8][1] and [SPCL] [9][1] to disable level correction and enable amplitude fixed range.
4. Measure power with a power meter at the UUT RF OUTPUT. Note the reading.
5. Program the UUT for 2 dBm using the EDIT keys. The measured power should be 10 dB ± 0.2 dB below the reading noted in step 4.
6. Program the UUT for -8 dBm using the EDIT keys. The measured power should be 20 dB ± 0.4 dB below the noted reading.
7. Program the UUT for [SPCL] [0][0].

If the UUT fails this test, the problem is likely to be in the detector or detector-linearizer circuit. If the UUT passes the test, the problem is constrained to the other ALC loop elements, and is likely to be a bandwidth problem associated with the loop amplifier or the modulator or modulator-linearizer circuit.

4D-49. RPP Control

When servicing the A2A5A4 Attenuator/RPP PCA, use the three dual-pin test points to aid in the troubleshooting of the assembly. The RPP can be tripped (to the protect position) by momentarily shorting the two points of TP1. It can be reset by momentarily

shorting TP2. Shorting TP3 reduces the level required to trip the A2A5A4 Attenuator/ RPP PCA, so it trips on the Generator's own output. This provides a convenient way to verify the operation of the entire trip circuitry, although at a reduced trip level.

To check the trip function with TP3 shorted, it is best to program the Generator to an output level of +10 dBm; then, program it for fixed amplitude range ([SPCL][9][1]). This allows the level to be varied from a low value up to the maximum value without any transients that might outherwise trip the RPP. Then, starting at a low level, such as -10 dBM (with the RPP reset), increase (EDIT) the UUT level in 1 dB steps until the RPP trips. RPP trip normally occurs between +10 and +15 dBm.

Section 5
List of Replaceable Parts

TABLE OF CONTENTS

ASSEMBLY NAME	DRAWING NO.	TABLE NO.	TABLE PAGE	FIGURE NO.	FIGURE PAGE
6060B Final Assembly	6060B T&BU	5-1	5-5	5-1	5-8
6061A Final Assembly	6061A T&BU	5-2	5-18	5-2	5-21
A1A1 Display PCA	6060A-7611	5-3	5-31	5-3	5-32
A2A1 Synthesizer PCA	6060B-7617	5-4	5-33	5-4	5-39
A2A2 VCO PCA	6060A-7618	5-5	5-41	5-5	5-43
A2A4 Output PCA	6060B-7624	5-6	5-44	5-6	5-49
A2A5 Attenuator/RPP Assembly	6060B-7641	5-7	5-50	5-7	5-51
A2A5A4 Attenuator/RPP PCA	6060B-7647	5-8	5-52	5-8	5-53
A2A5A5 Relay Driver/RPP PCA	6060A-7645	5-9	5-54	5-9	5-55
A2A7 Controller PCA	6060B-7628	5-10	5-56	5-10	5-58
A2A8 Non-Volatile Memory PCA	6060A-7629	5-11	5-59	5-11	5-60
A3A1 Power Supply PCA	6060A-7631	5-12	5-61	5-12	5-62
A3A3A1 IEEE-488 Interface PCA	6060A/AN-7633	5-13	5-63	5-13	5-64

5-1. INTRODUCTION

This section contains an illustrated list of replaceable parts for the 6060B and the 6061A. Parts are listed by assembly; alphabetized by reference designator. Each assembly is accompanied by an illustration showing the location of each part and its reference designator. The parts lists give the following information:

- Reference designator
- An indication if the part is subject to damage by static discharge
- Description
- Fluke stock number
- Manufacturers supply code
- Manufacturers part number or generic type
- Total quantity
- Any special notes (i.e., factory-selected part)

CAUTION

A ϟ symbol indicates a device that may be damaged by static discharge.

5-2. HOW TO OBTAIN PARTS

Electrical components may be ordered directly from the manufacturer by using the manufacturers part number, or from the John Fluke Mfg. Co., Inc. and its authorized representatives by using the part number under the heading FLUKE STOCK NO. A list of manufacturers supply codes is provided at the end of this section. Parts price information is available from the John Fluke Mfg. Co., Inc. or its representatives.

To ensure prompt delivery of the correct part, include the following information when you place an order:

- Fluke stock number
- Description (as given under the DESCRIPTION heading)
- Quantity
- Reference designator
- Part number and revision level of the pca containing the part.
- Instrument model and serial number

5-3. MANUAL STATUS INFORMATION

The Manual Status Information table that precedes the parts list defines the assembly revision levels that are documented in the manual. Revision levels are printed on the component side of each pca.

5-4. SERVICE CENTERS

A list of service centers is located at the end of this section.

MANUAL STATUS INFORMATION

REF OR OPTION NO.	ASSEMBLY NAME	FLUKE PART NO.	REVISION LEVEL
A1A1	Display PCA	738609	G
A2A1	Synthesizer PCA	792812	AG
A2A2	VCO PCA	748780	J
A2A4	Output PCA	798157	T
A2A5A4	Attenuator/RPP PCA	752667	H
A2A5A5	Relay Driver/RPP PCA	752816	K
A2A7	Controller PCA	798082 812495	G
A2A8	Non-Volatile Memory PCA	744094	D
A3A1	Power Supply	744052	L
A3A3A1	IEEE-488 Interface PCA	774562	F
-130	High-Stability Reference PCA	744102	F
-132	Medium-Stability Reference PCA	792788	D

Table 5-1. 6060B Final Assembly

REFERENCE DESIGNATOR	DESCRIPTION	FLUKE STOCK NO	MFRS SPLY CODE	MANUFACTURERS PART NUMBER OR GENERIC TYPE	TOT QTY	NOTES
A 1A1	ϟ DISPLAY PCA	738609	89536	738609	1	
A 12	ϟ SWITCH PWB	738591	89536	738591	1	
A 2A1	ϟ SYNTHESIZER PCA	792812	89536	792812	1	
A 2A2	ϟ VCO PCA	748780	89536	748780	1	
A 2A4	ϟ OUTPUT PCA	798157	89536	798157	1	
A 2A5	ATTENUATOR/RPE ASSEMBLY	752667	89536	752667	1	
A 2A7	ϟ CONTROLLER PCA	798082	89536	798082	1	
A 2A8	ϟ NON-VOLATILE MEMORY PCA	744094	89536	744094	1	
A 3A1	ϟ POWER SUPPLY PCA	744052	89536	744052	1	
A 3A3A1	ϟ IEEE-488 INTERFACE PCA	774562	89536	774562	1	
B 1	FAN,12VDC,34CFM,3.15"SQ	706598	82877	FL12A308	1	
C 1	CAP,CER,1000PF,+-5%,50V,COG,STL LEADS	876557	04222	SR215A102JAA ORT W/STL	1	
C 2	CAP,CER,270PF,+-5%,100V,COG	614586	04222	SR151A271JAA	1	
C 23	CAP,CER,0.01UF,+80-20%,100V,Z5V	149153	60705	562C25UCK101AF103Z	1	
E 1	TERM,RING,3/8 & 7/64,SOLDR	441972	79963	761	1	
E 2, 3	TERM,RING #6,3/32 - 2 PLACES,SOLDR	132399	78189	2104-06-00	2	
F 1	FUSE,.25X1.25,1.5A,250V,FAST	109330	71400	AGC1-1/2	1	
FL 3	FILTER,RF,BOLT TYPE,1000PF	769919	00779	842848-1	1	
FL 4	ϟ ASSEMBLY, MODULE FILTER	731240	89536	731240	1	
H 1, 23,145-H 163	SCREW,FHU,P,LOCK,SS,6-32,.250	320093 320093	74594	320093	21	
H 2, 3	WASHER,FLAT,MYLAR,.205,.309,.007	240820	86928	5622-25-7	2	
H 4, 5	CONN ACC,MICRO-RIBBON,SCREW LOCK	854737	05791	LT43026	2	
H 6,174,175	WASHER,FLAT,SS,.146,.270,.016	260471	86928	5710-23-15-P	3	
H 7,354,358-H 448	SCREW,PH,P,LOCK,MAG SS,6-32,.281	772236 772236	74594	772236	93	
H 8,199-201, H 356	WASHER,FLAT,ST.,.149,.375,.031	110270 110270	86928	5202-12-31	5	
H 9,164-166	SCREW,PH,P,LOCK,SS,8-32,.375	559054	74594	559054	4	
H 10, 24, 67-H 69,167,168, H 172,173,196-H 198,330-333, H 357,473,474	SCREW,PH,P,LOCK,STL,6-32,.250	152140 152140 152140 152140 152140	74594	152140	19	
H 11,203-205	SCREW,PH,P,LOCK,SS,6-32,.312	424713	78189	511 041800 00	4	
H 12,177-195	SCREW,FH,P,LOCK,STL,8-32,.375	114116	74594	114116	20	
H 13,451-459	SCREW,PH,P,LOCK,STL,4-40,.500	740761	74594	740761	10	
H 14,206-224	SCREW,PH,P,LOCK,STL,4-40,.187	820779	18715	P37	20	
H 15,229-231	NUT,HEX,ELASTIC STOP,STL,8-32,.172	306308	10059	F21NTM-82	4	
H 16,226-228, H 302-304,449	SCREW,CAP,SCKT,SS,8-32,.375	295105 295105	74594	295105	8	
H 17,305-307	WASHER,SHLDR,NYL,0.113X0.245X0.070	807560	86928	A364-164	4	
H 19,232,233, H 308-310	NUT,HEX,LOCK,SS,4-40	558866 558866	72962	558866	6	
H 20,317-319	SCREW,PH,P,SS,6-32,2.750	800441	2M530	800441	4	
H 21,320-326	WASHER,FLAT,ST,.174,.375,,.030	176743	86928	5710-31-30-P	8	
H 22,327-329	WASHER,FLAT,FIBER,.196,.500,.031	333989	86928	5600-8-32	4	
H 25,334	WASHER,SPRING,STL,.138,.281,.020	571968	51506	571968	2	
H 26,335	WASHER,SHLDR,FIBER,.140,.312,.062	110387	86928	5604-47	2	
H 27,336-343	NUT,HEX,ELAST STOP,STL,6-32,.125	110841	72962	F21NTM-62	9	
H 28,344,345	WASHER,LOCK,INTRNL,STL,.267ID	110817	86928	5855-18-Z1	3	
H 29,346-348	WASHER,FLAT,ALUM,0.125X0.250X0.062	381749	86928	5712-22-.063	4	
H 30, 31	SCREW,PH,P,LOCK,STL,4-40,.250	740746	74594	740746	2	
H 32- 34	SCREW,FHU,P,LOCK,SS,8-32,.250	320101	74594	320101	3	
H 42- 52	SCREW,PH,P,LOCK,SS,6-32,.750	376822	74594	376822	11	

Table 5-1. 6060B Final Assembly (cont)

REFERENCE DESIGNATOR	DESCRIPTION	FLUKE STOCK NO	MFRS SPLY CODE	MANUFACTURERS PART NUMBER OR GENERIC TYPE	TOT QTY	NOTES
H 53- 55, 70- H 144,169-171	SCREW,PH,P,LOCK,MAG SS,6-32,.375	783225 783225	74594	783225	81	
H 56- 66,475, H 476	METAL PART,STAMPED,HOLE PLUG,.250	101766 101766	18310	790.3002	13	
H 202,355	SCREW,PH,P,LOCK,STL,10-32,.250	218941	74594	218941	2	
H 311-315,450	SCREW,PH,P,SEMS,STL,6-32,.625	272591	89536	272591	6	
H 349	SPACER,.250 HEX,M-F,BR,6-32,.600	838292	51506	14040	1	
H 350-353	SCREW,PH,P,LOCK,SS,6-32,.500	320051		COMMERCIAL	4	
H 460-470	WASHER,FLAT,TEFLON,.105,.255,.016	147645	86928	5612-124-31	11	
H 471,472	SCREW,PH,P,LOCK,SS,4-40,.375	256164	74594	256164	2	
L 1	CORE,TOROID,FERRITE,20X14.5X7.5MM	493551	54583	H5C2-T20-7.5-14.5	1	
MP 1	TOP COVER	704866	89536	704866	1	
MP 2	BOTTOM COVER	704874	89536	704874	1	
MP 3, 47- 49	FOOT, SINGLE BAIL TYPE (DARK UMBER)	653923	89536	653923	4	
MP 5, 63,107, MP 108	DECAL, REAR CORNER	685214 685214	22670	685214	4	
MP 6, 64	SIDE TRIM 18"	525998	22670	525998	2	
MP 7, 69- 81	AIDE,PCB PULL	541730	89536	541730	14	
MP 10, 82- 92	GASKET,SHIELDING,MONEL MESH,CIRCULAR	720664	53217	20-11101	12	
MP 11	SHIELD, DISPLAY	812818	2M021	812818	1	
MP 12, 65- 68	GASKET,SHIELDING,MONEL MESH	520320	53217	20-90190	5	
MP 13	DECAL, OPERATION	812461	89536	812461	1	
MP 14	FRONT PANEL SM	657593	89536	657593	1	
MP 15	DECAL, FRONT PANEL	774042	89536	774042	1	
MP 16	CONN ACC,COAX,BNC,CAP	478982	00779	1-330022-2	1	
MP 17, 43	CHASSIS SIDE	657627	89536	657627	2	
MP 18, 34, 44- MP 46,104	CABLE TIE ANCHOR,ADHSV,.160TIE	407908 407908	06383	ABMM-A-C	6	
MP 19	BRACKET, RF OUTPUT, PLATED	774471	89536	774471	1	
MP 20, 32, 38, MP 50- 62,102	CABLE ACCESS,TIE,4.00L,.10W,.75 DIA	172080 172080	06383	SST-1M	17	
MP 21	BRACKET, POWER SWITCH	774489	89536	774489	1	
MP 22	PUSHBUTTON, LG RECT. GREEN CL REPL	420893	89536	420893	1	
MP 23, 93, 95, MP 114	CORNER BRACKET	657601 657601	89536	657601	4	
MP 24, 94, 96, MP 111	CORNER HANDLE, FRONT 5.25 INCH, DK UM	656173 656173	89536	656173	4	
MP 25, 97, 98	SHOCK MOUNT, PS,7116	732941	5P059	732941	3	
MP 26	PLUG, BUTTON	760231	89536	760231	1	
MP 27	BUSHING COVER RF OUTPUT	538256	89536	538256	1	
MP 28, 99-101	INSUL PART,POWER,SI,.750,.500	534453	55285	7403-09FR-54	4	
MP 29	INSUL PART,TO-3,SI,1.650,1.140	473165	55285	7403-09FR-05	1	
MP 30	COVER PLATE, IEEE	774075	89536	774075	1	
MP 31	TRANSFORMER COVER, PAINTED	731307	89536	731307	1	
MP 33,103	CABLE ACC,CLAMP,.500 ID,SCREW MOUNT	100974	06915	N8B	2	
MP 35	FAN SKIRT	792721	89536	792721	1	
MP 36	RETAINER,AUX PWR SUPPLY CONN	748640	89536	748640	1	
MP 37	HEAT DIS,HORIZ,1.860,1.062,.500,TO-3	740738	98978	7-423BA	1	
MP 39	DECAL,DATA DISK	535294	89536	535294	1	
MP 40	COVER, OUTPUT, PLATED	731430	89536	731430	1	
MP 41	COVER, SYNTHESIZER, PLATED	792671	89536	792671	1	
MP 42	COVER, CAL-PROM	774570	89536	774570	1	

Table 5-1. 6060B Final Assembly (cont)

REFERENCE DESIGNATOR		DESCRIPTION	FLUKE STOCK NO	MFRS SPLY CODE	MANUFACTURERS PART NUMBER OR GENERIC TYPE	TOT QTY	NOTES
MP 105,106		METAL PART,STAMPED,HOLE PLUG,.500	101774	18310	790-3008	2	
MP 110		LENS DISPLAY	657718	60204	657718	1	
MP 112		DECAL, LENS, 10KHZ	774604	22670	774604	1	
MP 113		BUSHING INSULATION R.F.OUTPUT	537803	89536	537803	1	
MP 115	ϟ	SHIELD, SWITCH RF	716852	89536	716852	1	
MP 116		ADAPTER,COAX,SMA(M),N(M)	516963	21845	SF1132-6002	1	
MP 118		LABEL,ADHES,VINYL,BAR CODE,1.500,.312	844712	22670	844712	2	
MP 119		PANEL, REAR	774638	89536	774638	1	
MP 120		IEEE MTG BRKT	657650	89536	657650	1	
S 1		SWITCH, LEFT CONDUCTIVE ELASTOMERIC	698597	0K392	698597	1	
S 2		SWITCH,CENTER CONDUCTIVE ELASTOMERIC	731349	0K392	731349	1	
S 3		SWITCH,RIGHT CONDUCTIVE ELASTOMERIC	731356	0K392	731356	1	
T 1		TRANSFORMER, POWER	717959	89536	717959	1	
TM 1		6060B/6061A INSTRUCTION MANUAL	893052	89536	893052	1	
TM 2		IEEE REFERENCE GUIDE	812453	89536	812453	1	
TM 3		MANUAL, GETTING STARTED	812503	89536	812503	1	
U 1	ϟ	IC,VOLT REG,FIXED,+5 VOLTS,3 AMP,TO-3	453944	27014	LM223K	1	1
W 1		CABLE ASSEMBLY, SEMI-RIGID W 1	731380	98290	731380	1	
W 2		CORD,LINE,5-15/IEC,3-18AWG,SVT,7.5 FT	284174	70903	17239	1	
W 3		CABLE ASSEMBLY, CONTROLLER-POWER	738534	89536	738534	1	
W 6		CABLE ASSY,MOD INPUT,MODULE	738542	89536	738542	1	
W 7		CABLE ASSY MOD INPUT FRONT	738500	89536	738500	1	
W 10		CABLE ASSEMBLY, SYNTHESIZER-POWER	738526	89536	738526	1	
W 15		CABLE, LINE FILTER	774588	89536	774588	1	
W 24		CABLE ASSEMBLY, ATTENUATOR (RELAY)	752725	89536	752725	1	
W 25		CABLE ASSY,RF,REF IN	748699	89536	748699	1	
W 26		WIRE FOR TEST & BUTTONUP	847145	89536	847145	1	
W 27		CABLE ASSY,RF,REF IN/OUT	748681	89536	748681	1	
X 1, 2		SOCKET,1 ROW,PWB,0.100CTR,7 POS	520809	30035	SS-109-1-07	2	

NOTES:
ϟ Static sensitive part.
1. REFERRED TO THROUGHOUT THIS MANUAL AS A3U1.

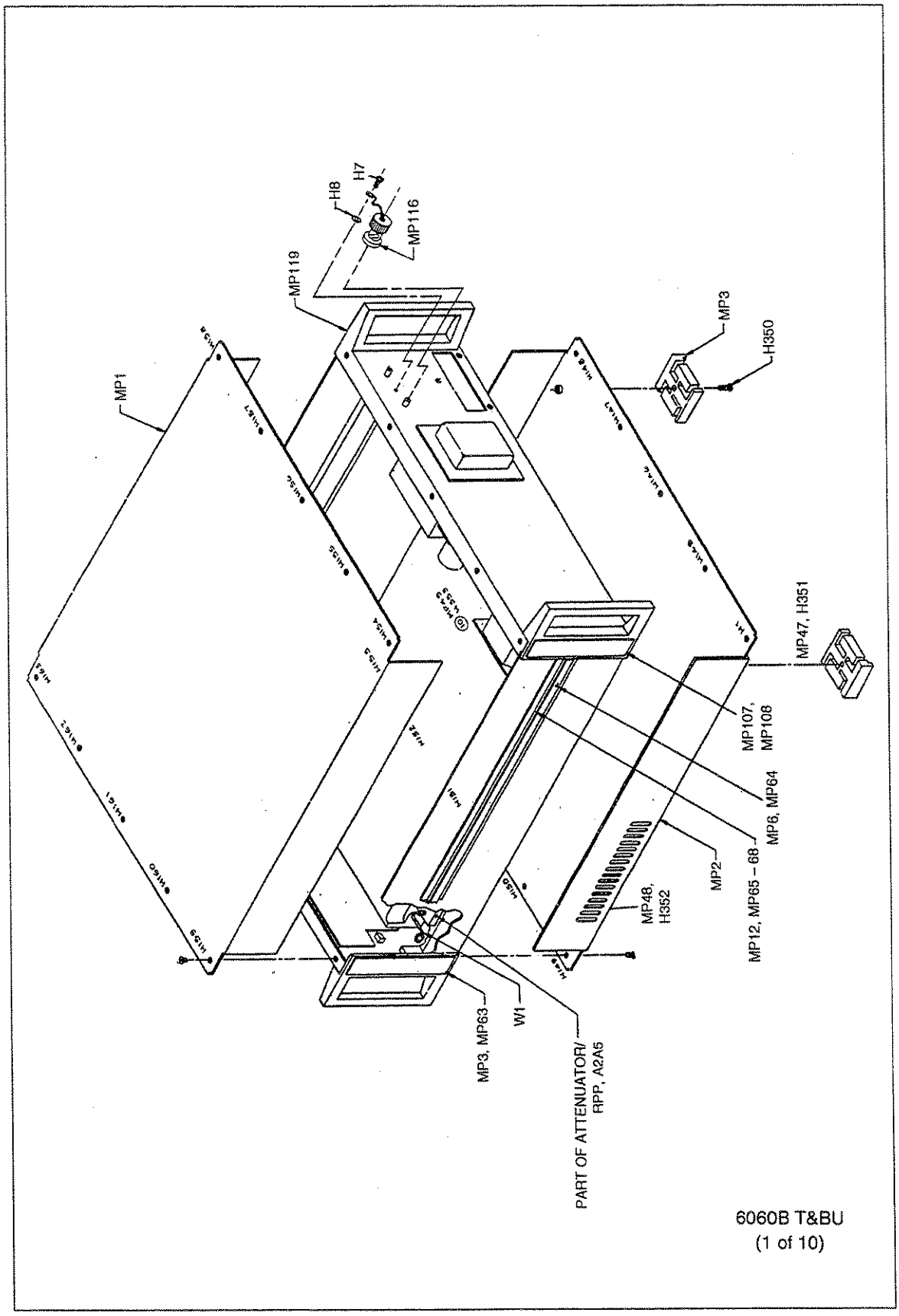

Figure 5-1. 6060B Final Assembly

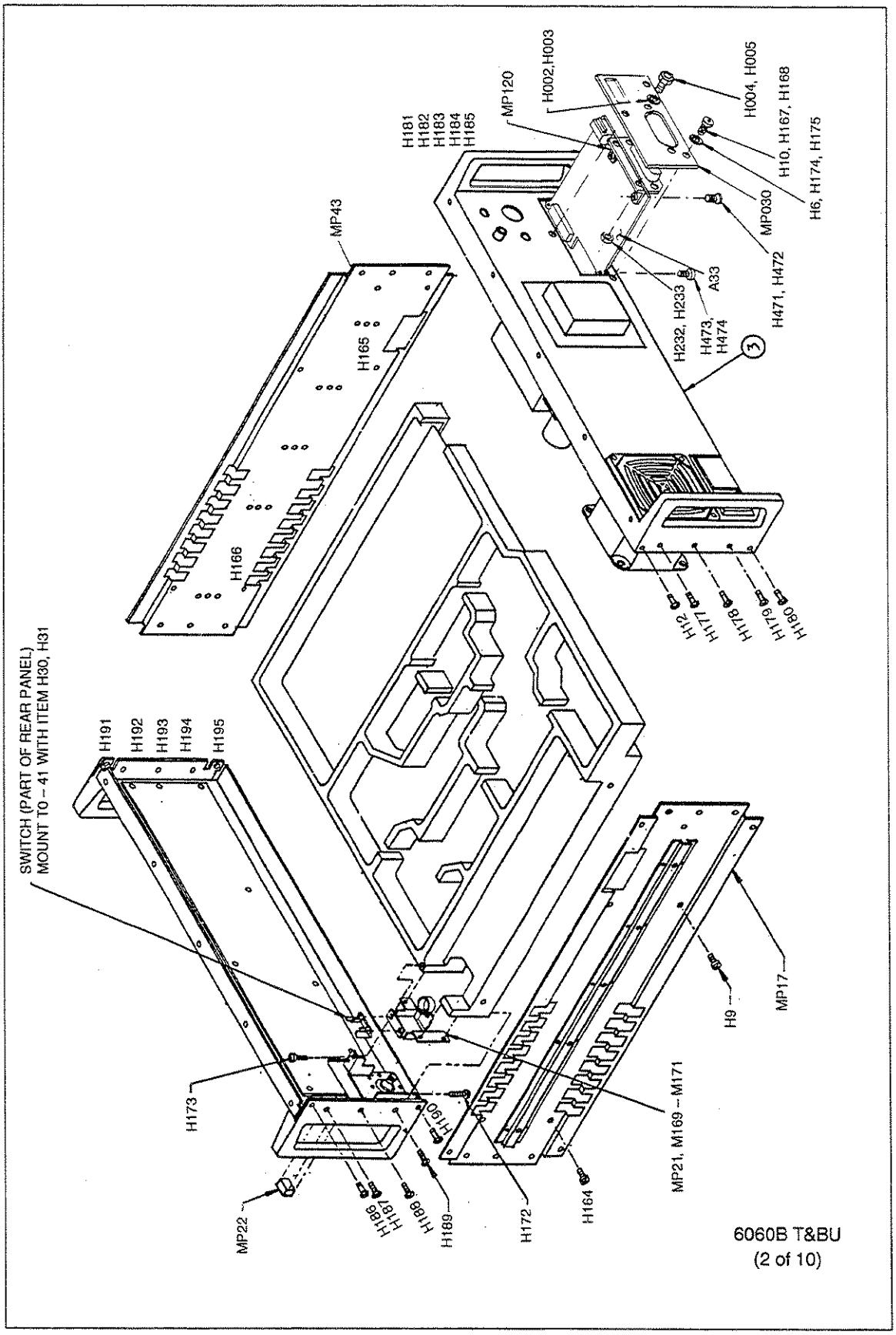

Figure 5-1. 6060B Final Assembly (cont)

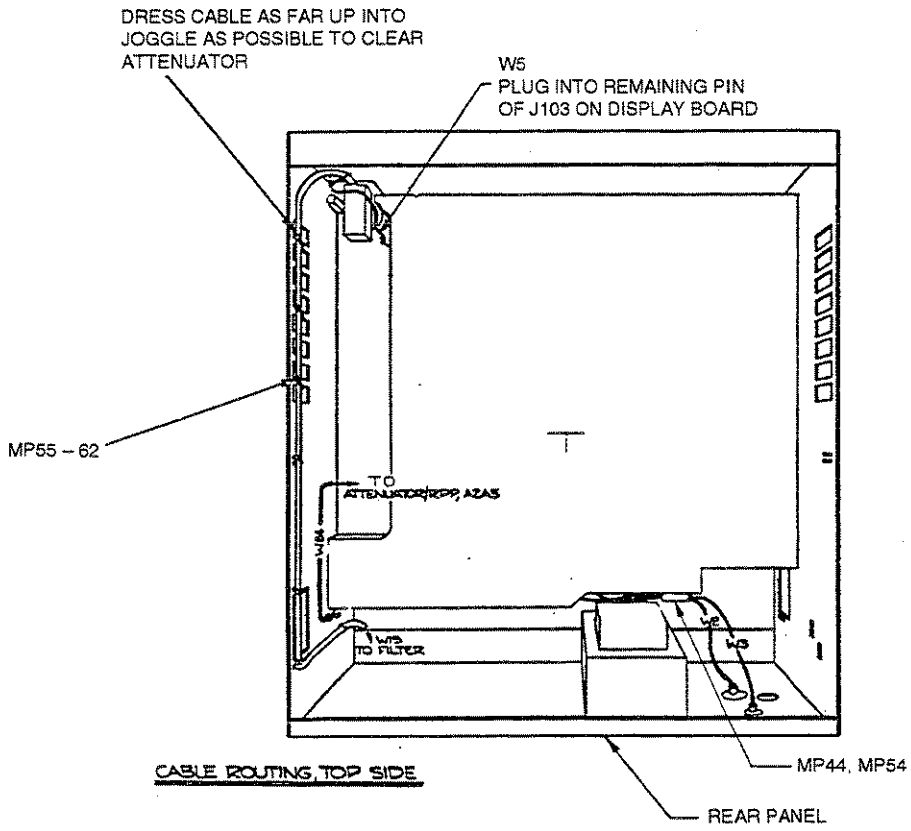

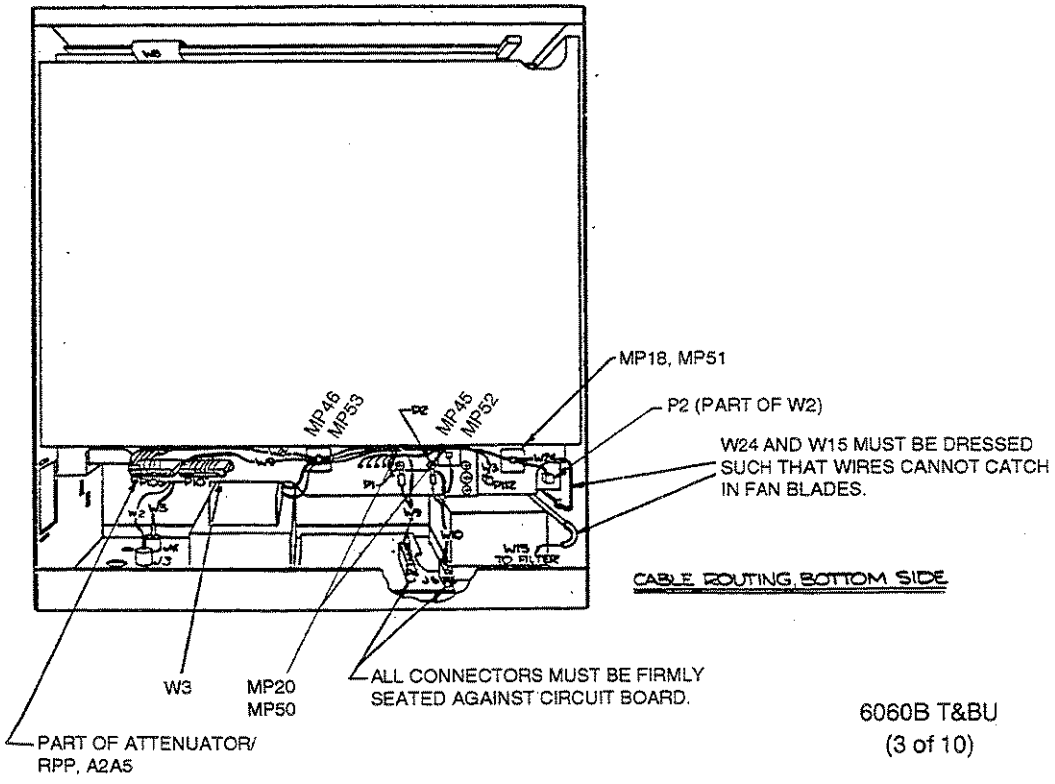

Figure 5-1. 6060B Final Assembly (cont)

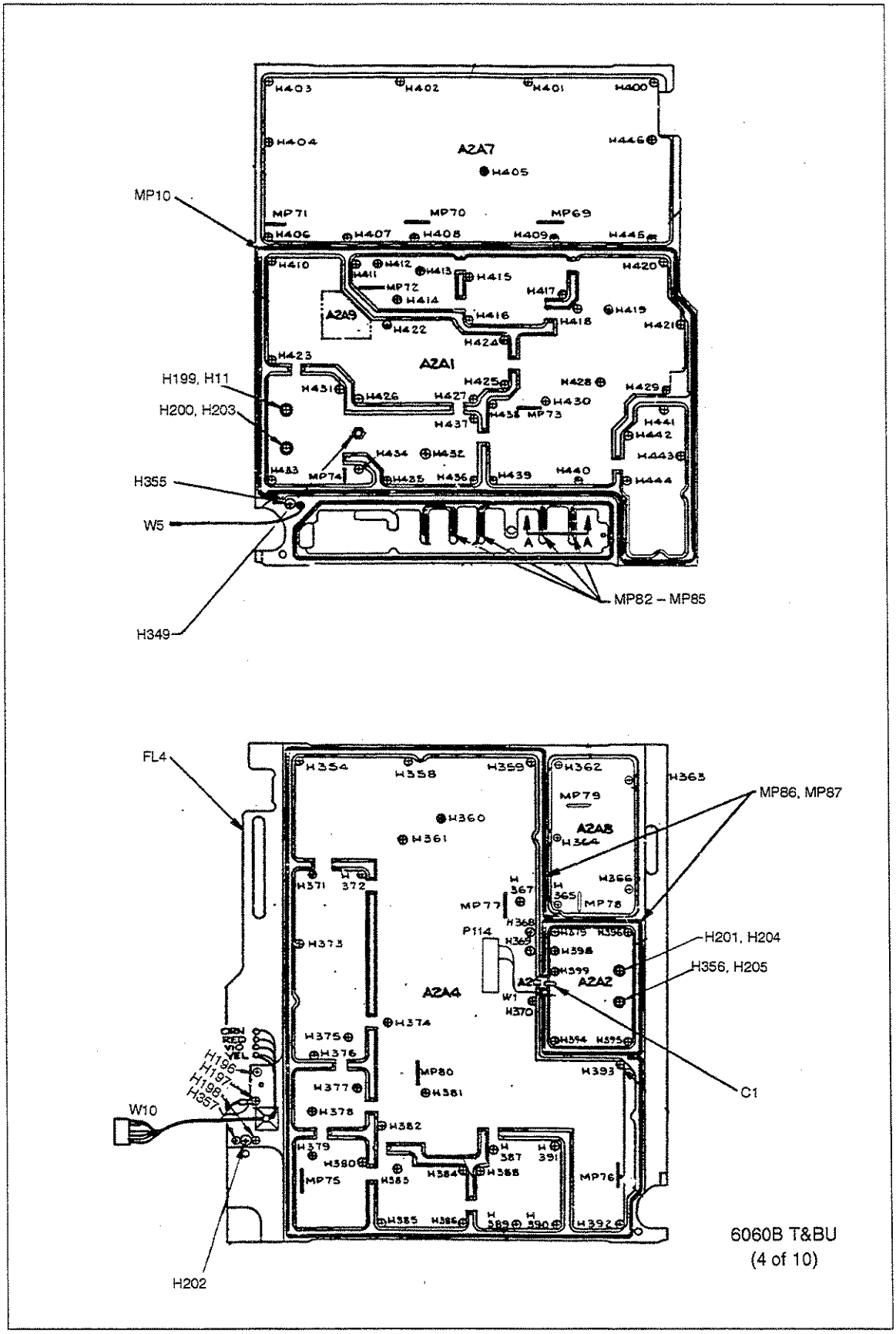

Figure 5-1. 6060B Final Assembly (cont)

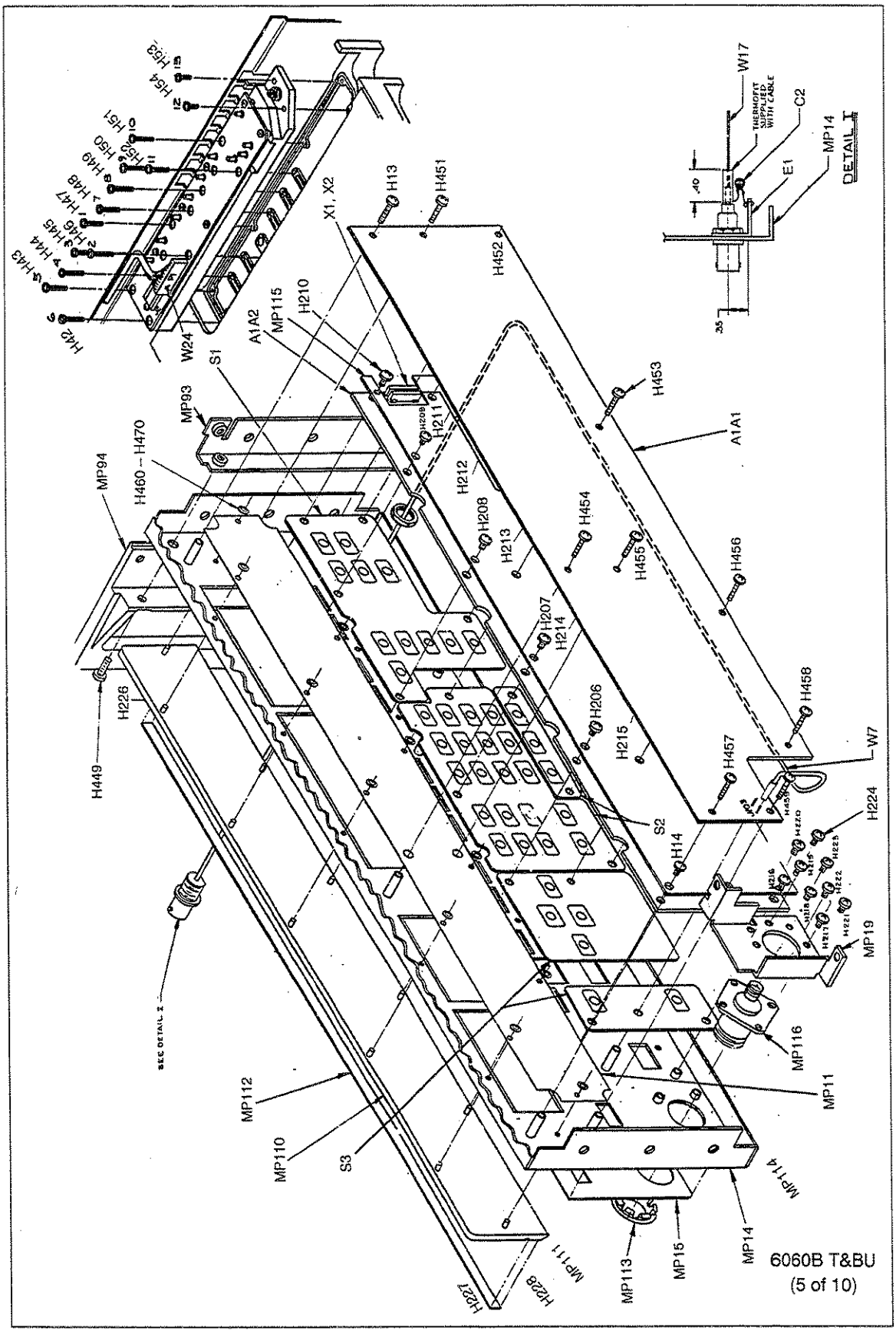

Figure 5-1. 6060B Final Assembly (cont)

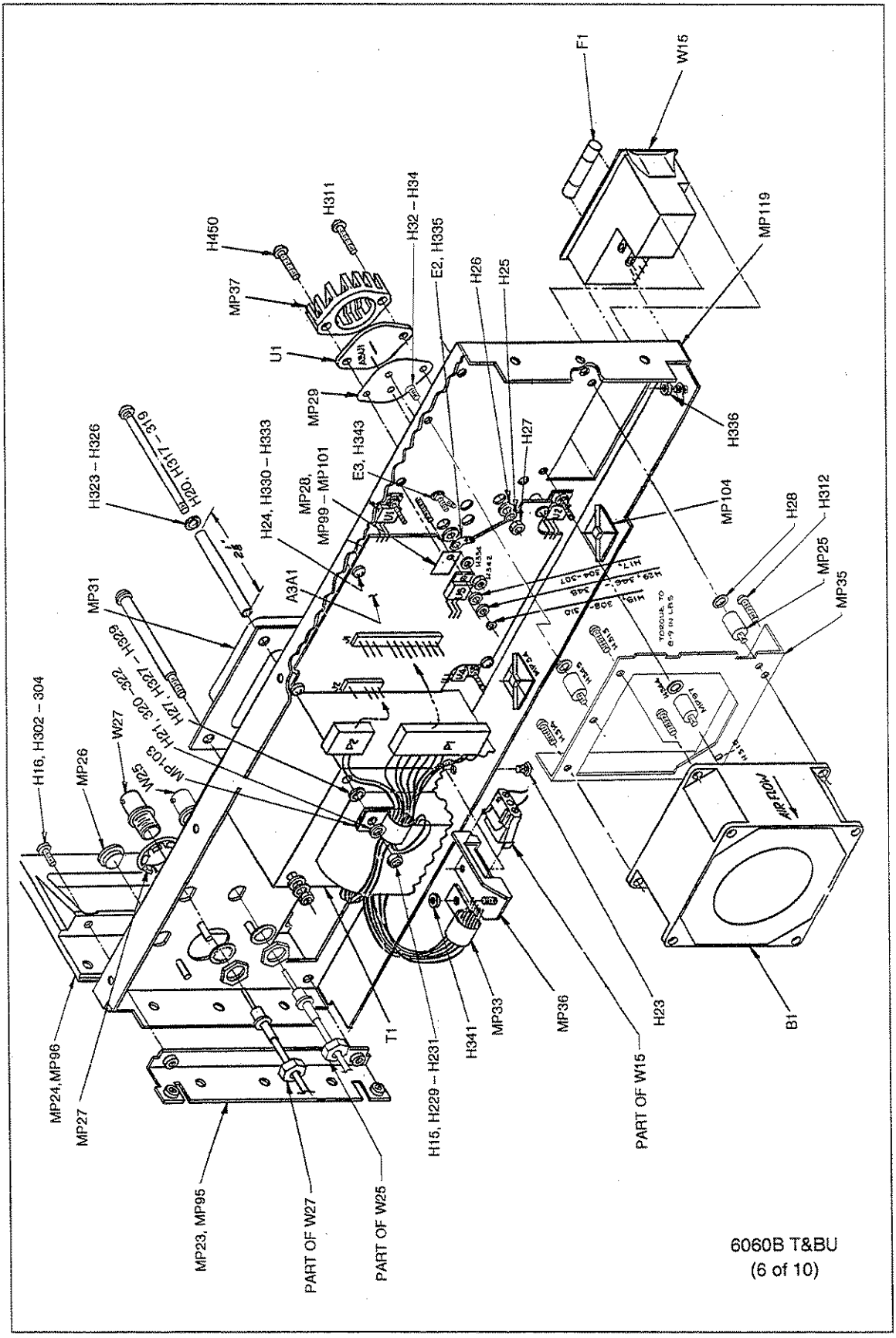

Figure 5-1. 6060B Final Assembly (cont)

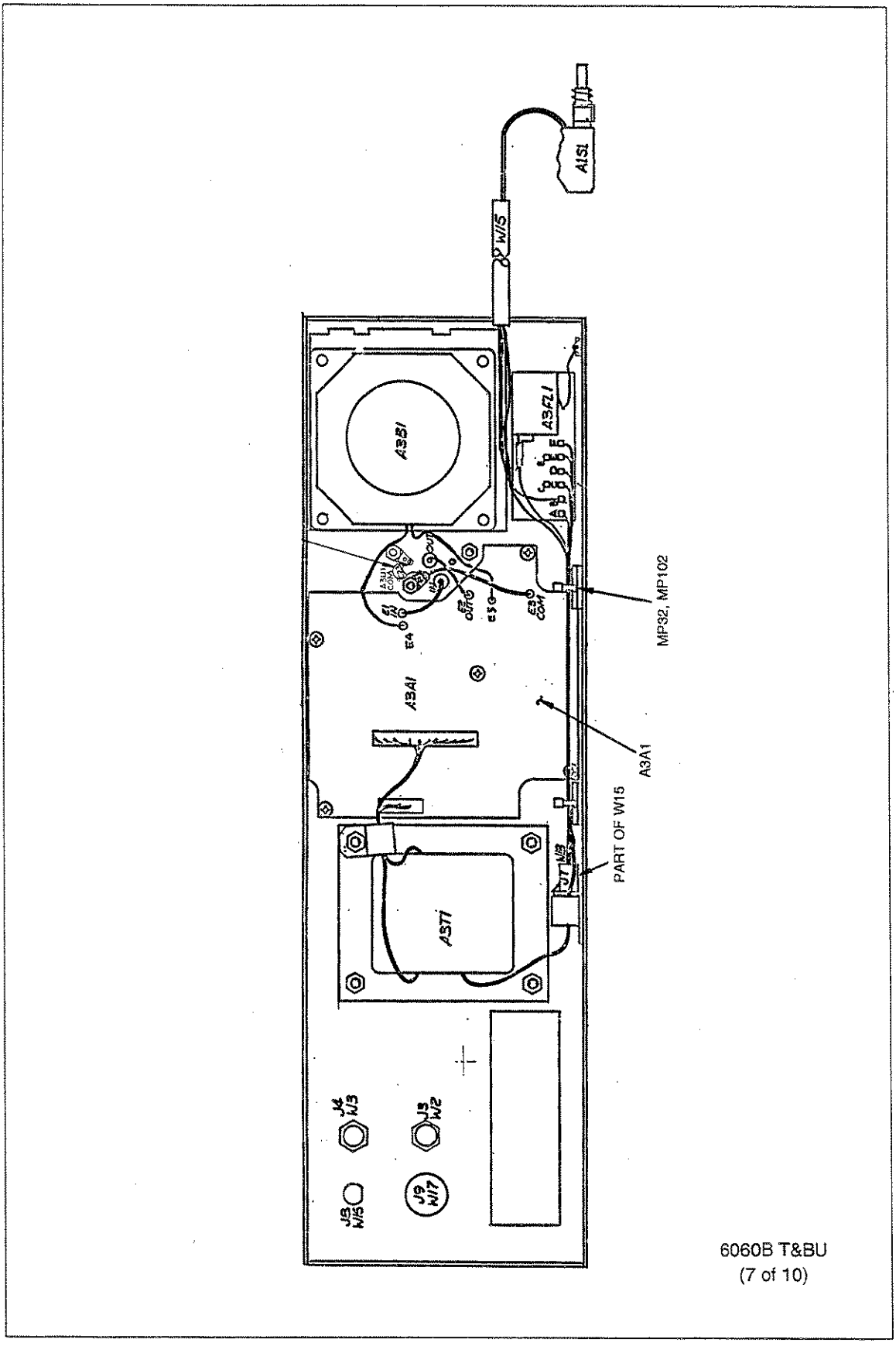

Figure 5-1. 6060B Final Assembly (cont)

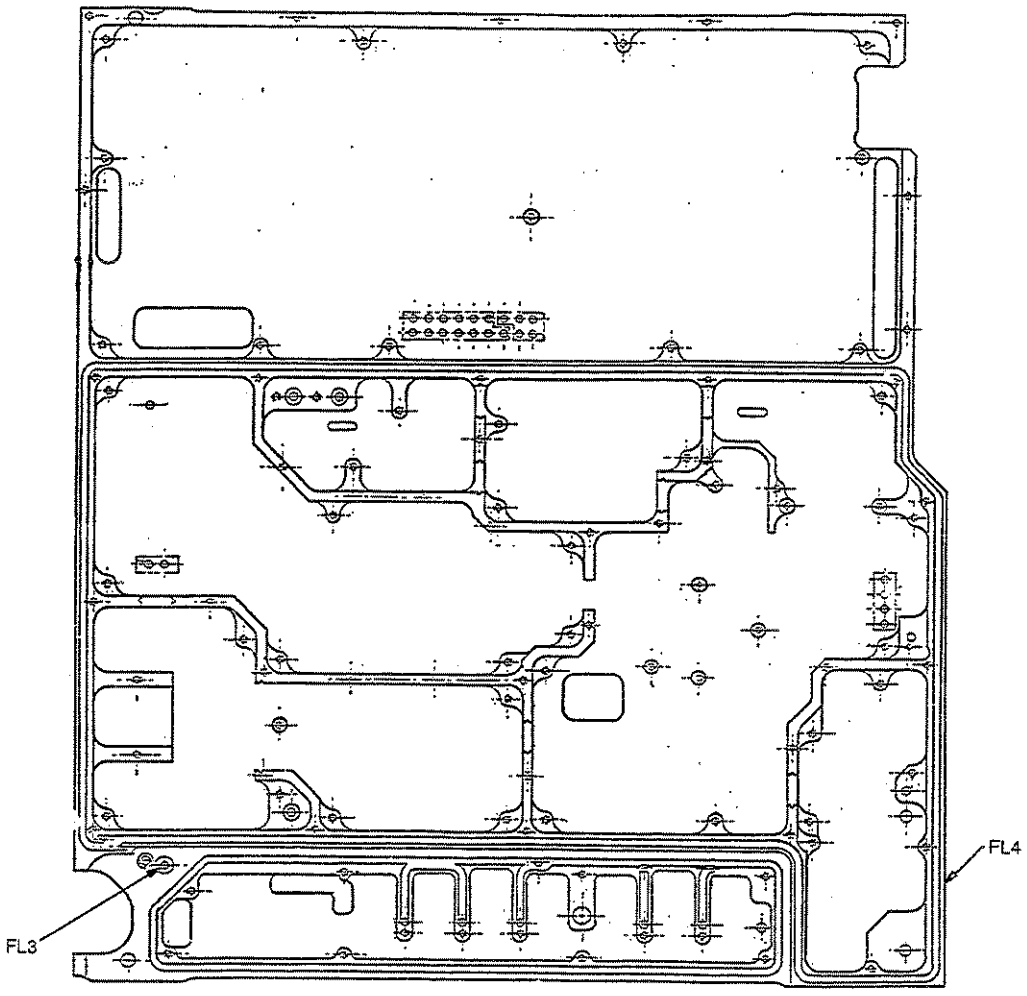

6060B T&BU
(8 of 10)

Figure 5-1. 6060B Final Assembly (cont)

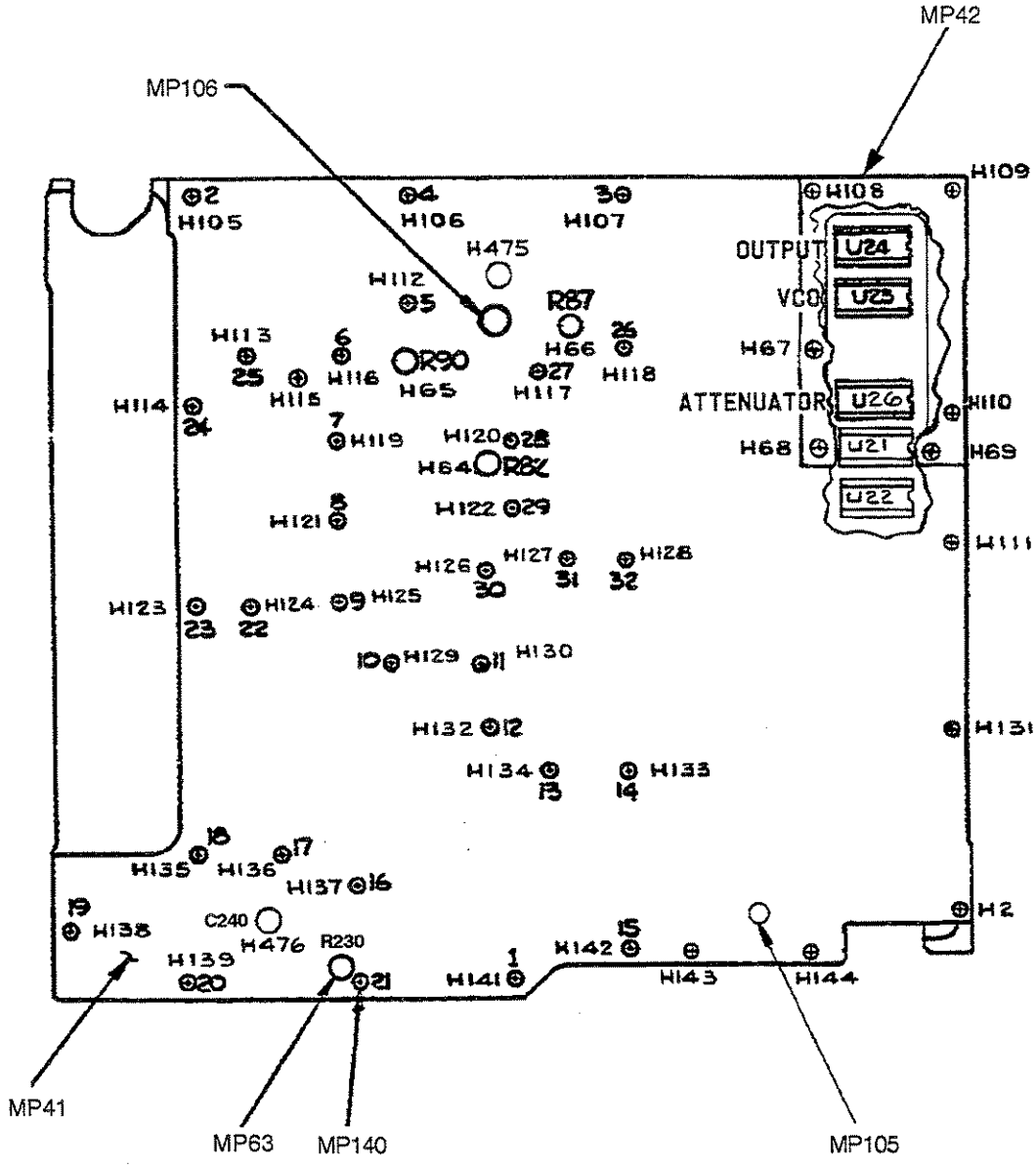

SYNTHESIZER SIDE

6060B T&BU
(9 of 10)

Figure 5-1. 6060B Final Assembly (cont)

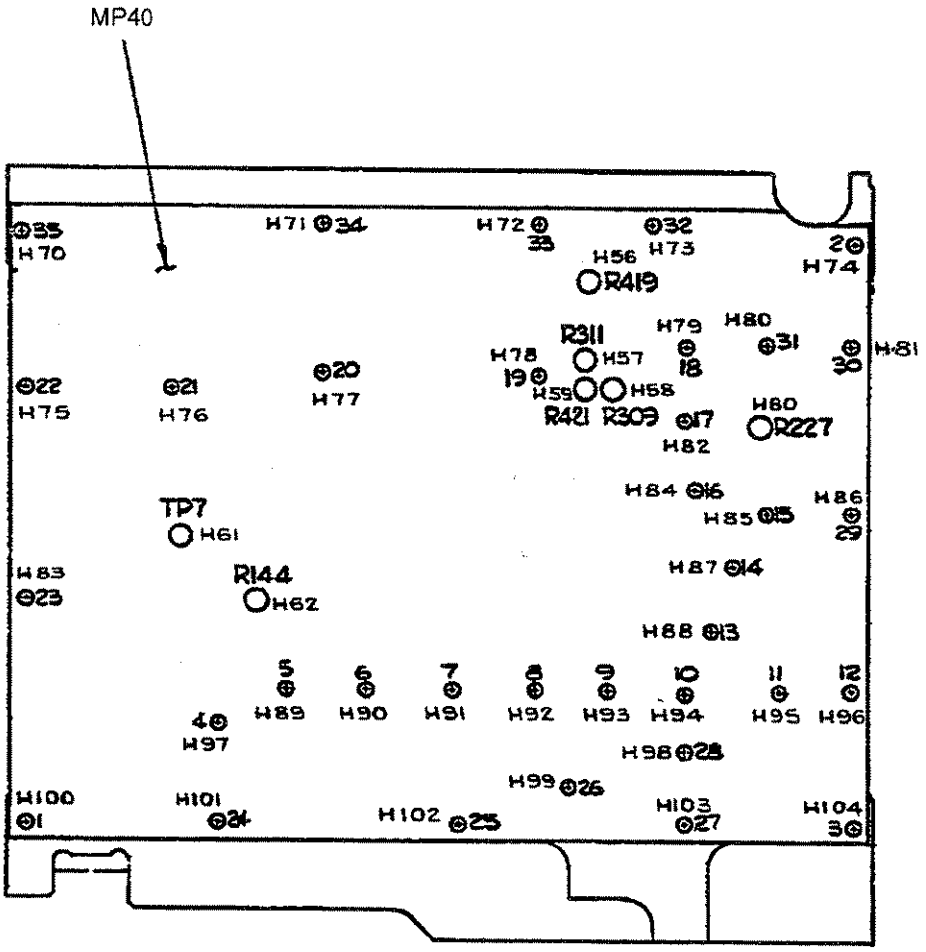

OUTPUT SIDE

6060B T&BU
(10 of 10)

Figure 5-1. 6060B Final Assembly (cont)

Table 5-2. 6061A Final Assembly

REFERENCE DESIGNATOR	DESCRIPTION	FLUKE STOCK NO	MFRS SPLY CODE	MANUFACTURERS PART NUMBER OR GENERIC TYPE	TOT QTY	NOTES
A 1A1	ϟ DISPLAY PCA	738609	89536	738609	1	
A 12	ϟ SWITCH PWB	738591	89536	738591	1	
A 2A1	ϟ SYNTHESIZER PCA	792812	89536	792812	1	
A 2A2	ϟ VCO PCA	798017	89536	798017	1	
A 2A4	ϟ OUTPUT PCA	798157	89536	798157	1	
A 2A5	ATTENUATOR/RPP ASSEMBLY	752667	89536	752667	1	
A 2A7	ϟ CONTROLLER PCA	812495	89536	812495	1	
A 2A8	ϟ NON-VOLATILE MEMORY PCA	744094	89536	744094	1	
A 3A1	ϟ POWER SUPPLY PCA	744052	89536	744052	1	
A 3A3A1	ϟ IEEE-488 INTERFACE PCA	774562	89536	774562	1	
B 1	FAN,12VDC,34CFM,3.15"SQ	706598	82877	FL12A308	1	
C 1	CAP,CER,1000PF,+-5%,50V,COG,STL LEADS	876557	04222	SR215A102JAA ORT W/STL	1	
C 2	CAP,CER,270PF,+-5%,100V,COG	614586	04222	SR151A271JAA	1	
C 23	CAP,CER,0.01UF,+80-20%,100V,Z5V	149153	60705	562Z5UCK101AF103Z	1	
E 1	TERM,RING,3/8 & 7/64,SOLDR	441972	79963	761	1	
E 3, 4	TERM,RING #6,3/32 - 2 PLACES,SOLDR	132399	78189	2104-06-00	2	
F 1	FUSE,.25X1.25,1.5A,250V,FAST	109330	71400	AGC1-1/2	1	
FL 1	ϟ ASSEMBLY, MODULE FILTER	731240	89536	731240	1	
FL 2	FILTER,RF,BOLT TYPE,1000PF	769919	00779	842848-1	1	
H 1, 23, 39-H 57	SCREW,FHU,P,LOCK,SS,6-32,.250	320093 320093	74594	320093	21	
H 2, 4, 10, H 13, 14, 97-H 106,385-389	SCREW,PH,P,LOCK,STL,4-40,.187	820779 820779 820779	1B715	P37	20	
H 5, 19, 83-H 89, 92- 95, H 132-136,341-H 343,378-380	SCREW,PH,P,LOCK,STL,6-32,.250	152140 152140 152140 152140	74594	152140	24	
H 6, 58, 59	WASHER,FLAT,SS,.146,.270,.016	260471	86928	5710-23-15-P	3	
H 7,235-327, H 401	SCREW,PH,P,LOCK,MAG SS,6-32,.281	772236 772236	74594	772236	95	
H 8,234,400	WASHER,FLAT,STL,.149,.375,.031	110270	86928	5202-12-31	3	
H 9, 60- 62	SCREW,PH,P,LOCK,SS,8-32,.375	559054	74594	559054	4	
H 11, 63	SCREW,PH,P,LOCK,STL,4-40,.250	740746	74594	740746	2	
H 12, 64- 82	SCREW,FH,P,LOCK,STL,8-32,.375	114116	74594	114116	20	
H 15,332-334	NUT,HEX,ELASTIC STOP,STL,8-32,.172	306308	10059	F21NTM-82	4	
H 16,329-331, H 335-337,405	SCREW,CAP,SCKT,SS,8-32,.375	295105 295105	74594	295105	8	
H 18, 31, 32, H 338-340	NUT,HEX,LOCK,SS,4-40	558866 558866	72962	558866	6	
H 21,346-352	WASHER,FLAT,SS,.174,.375,,.030	176743	86928	5710-31-30-P	8	
H 25,353	WASHER,SPRING, TL,.138,.281,.020	571968	51506	571968	2	
H 26,354	WASHER,SHLDR,FIBER,.140,.312,.062	110387	86928	5604-47	2	
H 27,359-362	NUT,HEX,ELAST STOP,STL,6-32,.125	110841	72962	F21NTM-62	5	
H 28,363,364	WASHER,LOCK,INTRNL,STL,.267ID	110817	86928	5855-18-Z1	3	
H 29,365-367	WASHER,FLAT,ALUM,0.125X0.250X0.062	381749	86928	5712-22-.063	4	
H 33, 34	WASHER,FLAT,MYLAR,.205,.309,.007	240820	86928	5622-25-7	2	
H 35, 36	CONN ACC,MICRO-RIBBON,SCREW LOCK	854737	05791	LT43026	2	
H 37, 38	SCREW,PH,P,LOCK,SS,4-40,.375	256164	74594	256164	2	
H 96	SPACER,.250 HEX,M-F,BR,6-32,.600	838292	51506	14040	1	
H 107-116	SCREW,PH,P,LOCK,STL,4-40,.500	740761	74594	740761	10	
H 117-119	SCREW,FHU,P,LOCK,SS,8-32,.250	320101	74594	320101	3	
H 120-123	WASHER,SHLDR,NYL,0.113X0.245X0.070	807560	86928	A364-164	4	
H 124-127	SCREW,PH,P,SS,8-32,2.750	800441	2M530	800441	4	
H 128-131	WASHER,FLAT,FIBER,.196,.500,.031	333989	86928	5600-8-32	4	
H 144-154	SCREW,PH,P,LOCK,SS,6-32,.750	376822	74594	376822	11	

Table 5-2. 6061A Final Assembly (cont)

REFERENCE DESIGNATOR	DESCRIPTION	FLUKE STOCK NO	MFRS SPLY CODE	MANUFACTURERS PART NUMBER OR GENERIC TYPE	TOT QTY	NOTES
H 155-232	SCREW,PH,P,LOCK,MAG SS,6-32,.375	783225	74594	783225	78	
H 328,402	SCREW,PH,P,LOCK,STL,10-32,.250	218941	74594	218941	2	
H 344,345	SCREW,PH,P,SEMS,STL,6-32,.625	272591	89536	272591	2	
H 368-377,406, H 418,419	METAL PART,STAMPED,HOLE PLUG,.250	101766 101766	18310	790.3002	13	
H 381-384	SCREW,PH,P,LOCK,SS,6-32,.500	320051		COMMERCIAL	4	
H 403,404	SCREW,PH,P,LOCK,SS,6-32,.312	424713	78189	511 041800 00	2	
H 407-417	WASHER,FLAT,TEFLON,.105,.255,.016	147645	86928	5612-124-31	11	
L 1	CORE,TOROID,FERRITE,20X14.5X7.5MM	493551	54583	HSC2-T20-7.5-14.5	1	
MP 1	TOP COVER	704866	89536	704866	1	
MP 2	BOTTOM COVER	704874	89536	704874	1	
MP 3, 45- 47	FOOT, SINGLE BAIL TYPE (DARK UMBER)	653923	89536	653923	4	
MP 4	LABEL,ADHES,VINYL,BAR CODE,1.500,.312	844712	22670	844712	2	
MP 5, 7, 61, MP 63	DECAL, REAR CORNER	685214 685214	22670	685214	4	
MP 6, 62	SIDE TRIM 18"	525998	22670	525998	2	
MP 8, 70- 81, MP 108	AIDE,PCB PULL	541730 541730	89536	541730	14	
MP 9	COVER, OUTPUT, PLATED	731430	89536	731430	1	
MP 10, 82- 92	GASKET,SHIELDING,MONEL MESH,CIRCULAR	720664	53217	20-11101	12	
MP 11	SHIELD, DISPLAY	812818	2M021	812818	1	
MP 12	SHIELD, SWITCH RF	716852	89536	716852	1	
MP 13, 23, 93, MP 95	CORNER BRACKET	657601 657601	89536	657601	4	
MP 14	FRONT PANEL SM	657593	89536	657593	1	
MP 15	DECAL, FRONT PANEL	774042	89536	774042	1	
MP 16	CONN ACC,COAX,BNC,CAP	478982	00779	1-330022-2	1	
MP 17, 41	CHASSIS SIDE	657627	89536	657627	2	
MP 18, 34, 42- MP 44,104	CABLE TIE ANCHOR,ADHSV,.160TIE	407908 407908	06383	ABMM-A-C	6	
MP 19	BRACKET, RF OUTPUT, PLATED	774471	89536	774471	1	
MP 20, 30, 48- MP 60,102,115	CABLE ACCESS,TIE,4.00L,.10W,.75 DIA	172080 172080	06383	SST-1M	17	
MP 21	BRACKET, POWER SWITCH	774489	89536	774489	1	
MP 22	PUSHBUTTON, LG RECT. GREEN CL REPL	420893	89536	420893	1	
MP 24, 94, 96, MP 111	CORNER HANDLE, FRONT 5.25 INCH, DK UM	656173 656173	89536	656173	4	
MP 25, 97, 98	SHOCK MOUNT, PS,7116	732941	5P059	732941	3	
MP 26	PLUG, BUTTON	760231	89536	760231	1	
MP 27	BUSHING COVER RF OUTPUT	538256	89536	538256	1	
MP 28, 99-101	INSUL PART,POWER,SI,.750,.500	534453	55285	7403-09FR-54	4	
MP 29	INSUL PART,TO-3,SI,1.650,1.140	473165	55285	7403-09FR-05	1	
MP 31	TRANSFORMER COVER, PAINTED	731307	89536	731307	1	
MP 33,103	CABLE ACC,CLAMP,.500 ID,SCREW MOUNT	100974	06915	N8B	2	
MP 35	FAN SKIRT	792721	89536	792721	1	
MP 36	RETAINER,AUX PWR SUPPLY CONN	748640	89536	748640	1	
MP 37	HEAT DIS,HORI2,1.860,1.062,.500,TO-3	740738	98978	7-423BA	1	
MP 38	DECAL,DATA DISK	535294	89536	535294	1	
MP 39	COVER PLATE, IEEE	774075	89536	774075	1	
MP 40	IEEE MTG BRKT	657650	89536	657650	1	
MP 64- 68	GASKET,SHIELDING,MONEL MESH	520320	53217	20-90190	5	

Table 5-2. 6061A Final Assembly (cont)

REFERENCE DESIGNATOR	DESCRIPTION	FLUKE STOCK NO	MFRS SPLY CODE	MANUFACTURERS PART NUMBER OR GENERIC TYPE	TOT QTY	NOTES
MP 69	DECAL, OPERATION	812461	89536	812461	1	
MP 109	DECAL, LENS	812479	89536	812479	1	
MP 110	LENS DISPLAY	657718	60204	657718	1	
MP 112	ADAPTER,COAX,SMA(M),N(M)	516963	21845	SF1132-6002	1	
MP 113	BUSHING INSULATION R.F.OUTPUT	537803	89536	537803	1	
MP 114	PANEL, REAR	774638	89536	774638	1	
MP 116	COVER, SYNTHESIZER, PLATED	792671	89536	792671	1	
MP 117	ϟ COVER, CAL-PROM	774570	89536	774570	1	
P 1, 2	METAL PART,STAMPED,HOLE PLUG,.500	101774	18310	790-3008	2	
S 1	SWITCH, LEFT CONDUCTIVE ELASTOMERIC	698597	0K392	698597	1	
S 2	SWITCH,CENTER CONDUCTIVE ELASTOMERIC	731349	0K392	731349	1	
S 3	SWITCH,RIGHT CONDUCTIVE ELASTOMERIC	731356	0K392	731356	1	
T 1	TRANSFORMER, POWER	717959	89536	717959	1	
TM 1	6060B/6061A INSTRUCTION MANUAL	893052	89536	893052	1	
TM 2	MANUAL, GETTING STARTED	812503	89536	812503	1	
TM 3	IEEE REFERENCE GUIDE	812453	89536	812453	1	
U 1	ϟ IC,VOLT REG,FIXED,+5 VOLTS,3 AMP,TO-3	453944	27014	LM223K	1	1
W 1	CABLE ASSEMBLY, SEMI-RIGID W 1	731380	98290	731380	1	
W 2	CORD,LINE,5-15/IEC,3-18AWG,SVT,7.5 FT	284174	70903	17239	1	
W 3	CABLE ASSEMBLY, CONTROLLER-POWER	738534	89536	738534	1	
W 6	CABLE ASSY,MOD INPUT,MODULE	738542	89536	738542	1	
W 7	CABLE ASSY MOD INPUT FRONT	738500	89536	738500	1	
W 10	CABLE ASSEMBLY, SYNTHESIZER-POWER	738526	89536	738526	1	
W 15	CABLE, LINE FILTER	774588	89536	774588	1	
W 16	CABLE ASSY,RF,REF IN	748699	89536	748699	1	
W 24	CABLE ASSEMBLY, ATTENUATOR (RELAY)	752725	89536	752725	1	
W 25	WIRE FOR TEST & BUTTONUP	847132	89536	847132	1	
W 27	CABLE ASSY,RF,REF IN/OUT	748681	89536	748681	1	
X 1, 2	SOCKET,1 ROW,PWB,0.100CTR,7 POS	520809	30035	SS-109-1-07	2	

NOTES:
ϟ Static sensitive part.
1. REFERRED TO THROUGHOUT THIS MANUAL AS A3U1.

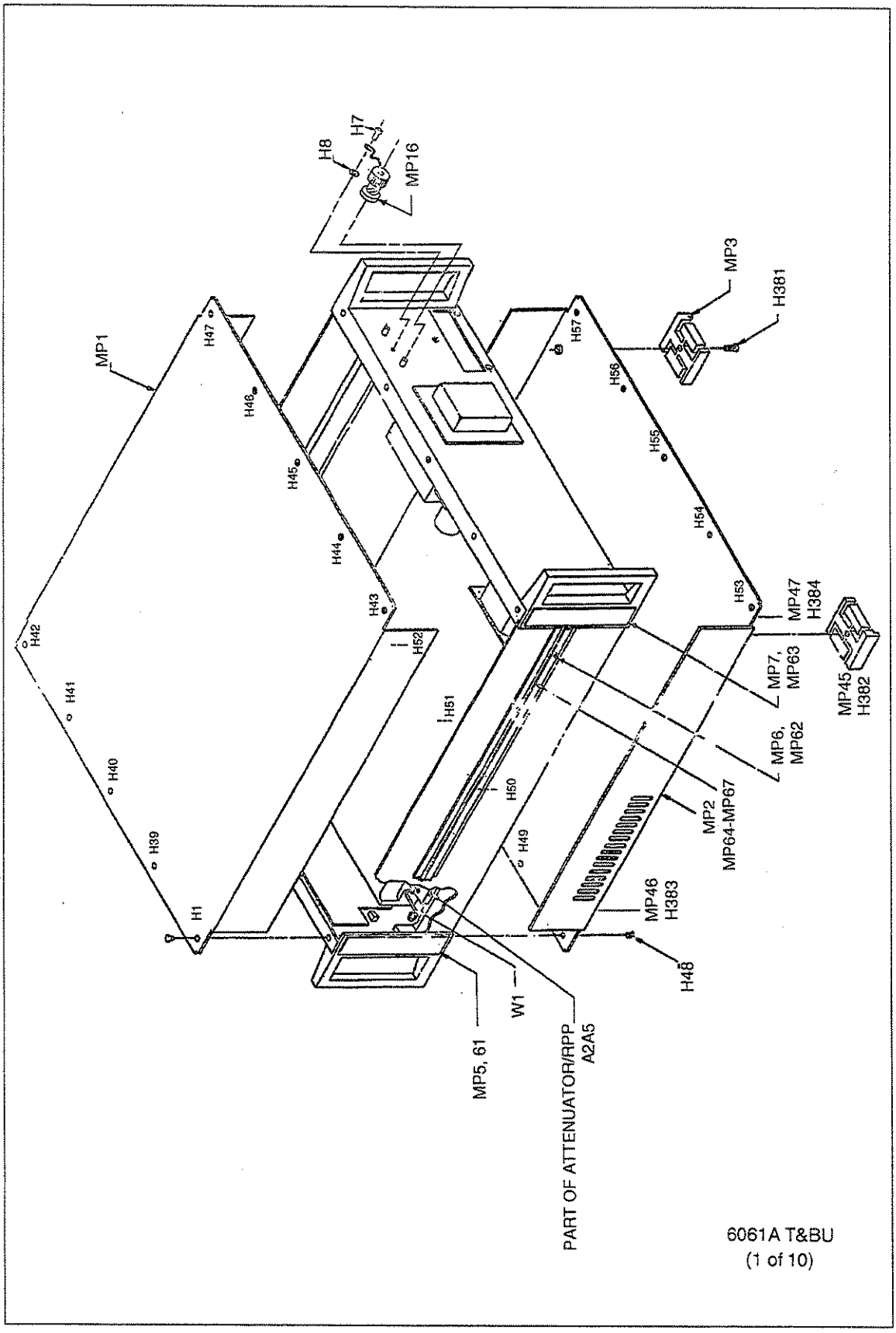

Figure 5-2. 6061A Final Assembly

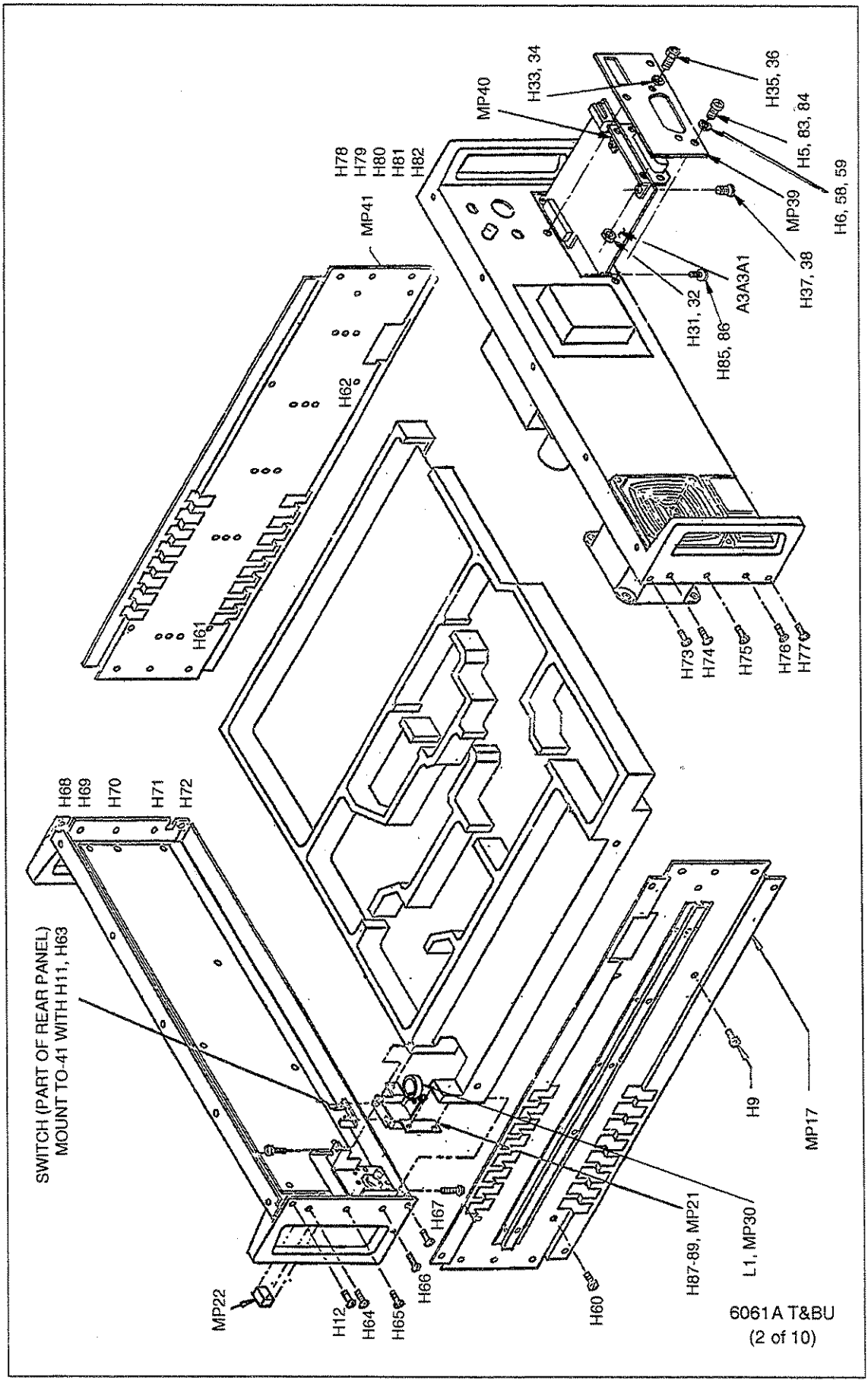

Figure 5-2. 6061A Final Assembly (cont)

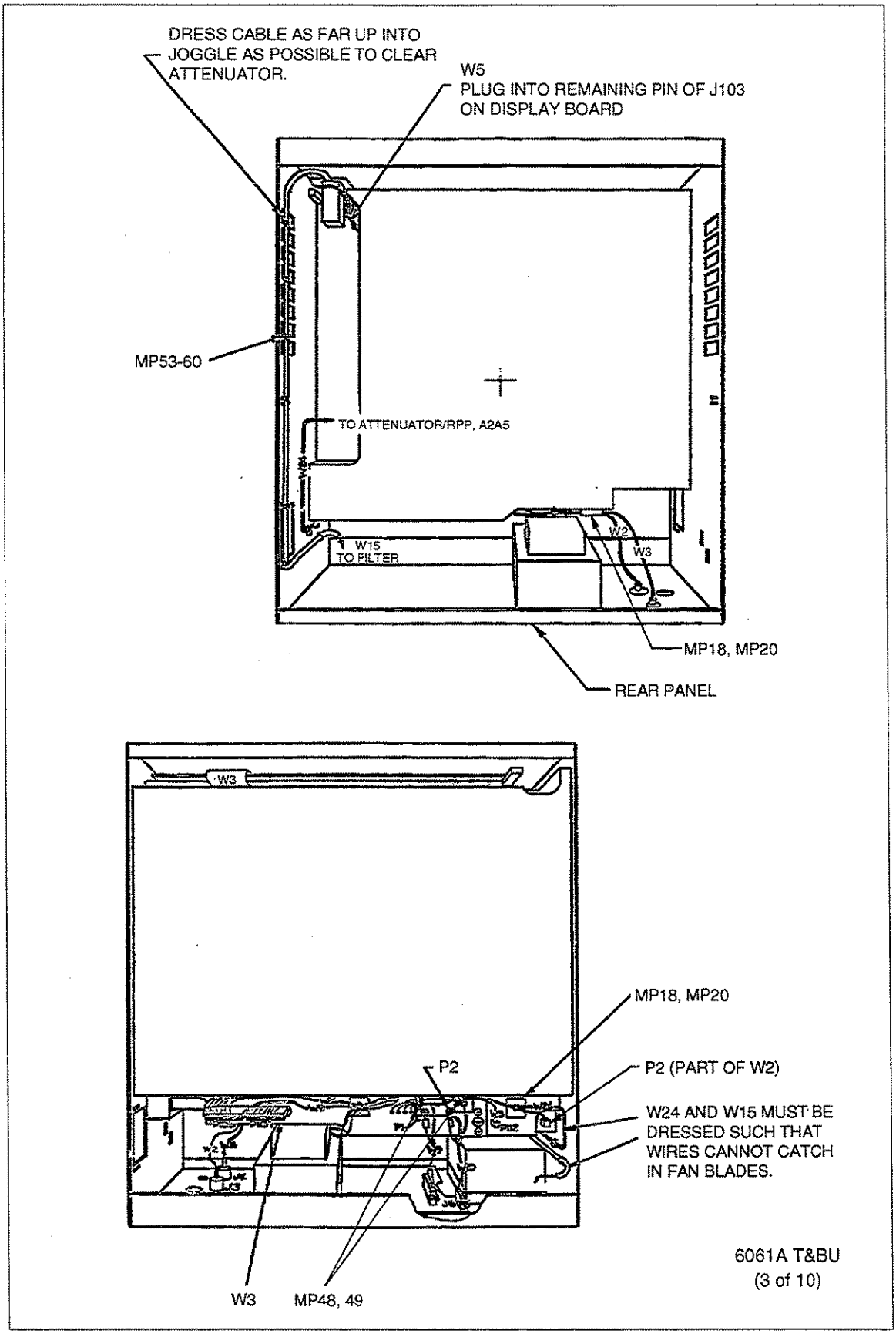

Figure 5-2. 6061A Final Assembly (cont)

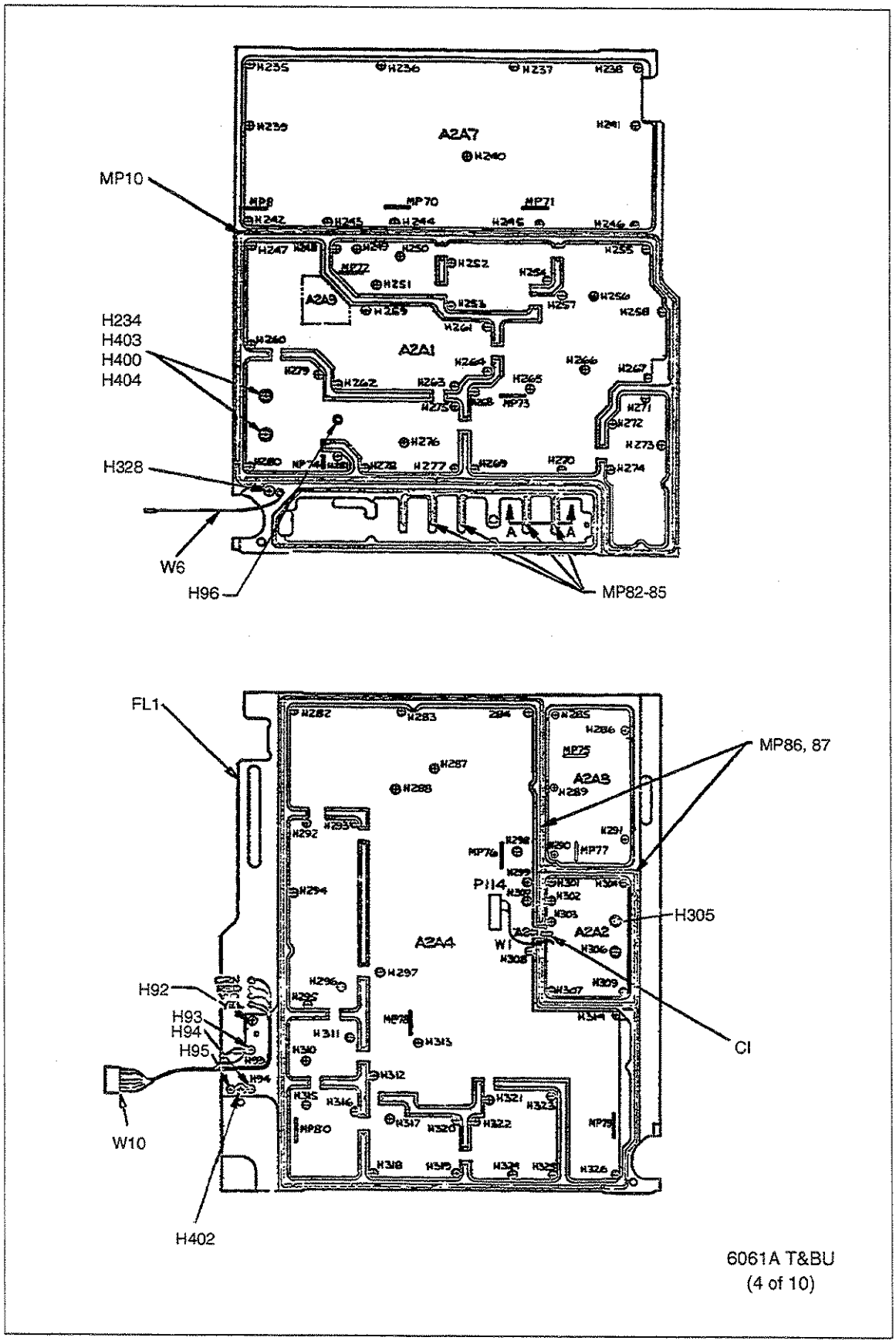

Figure 5-2. 6061A Final Assembly (cont)

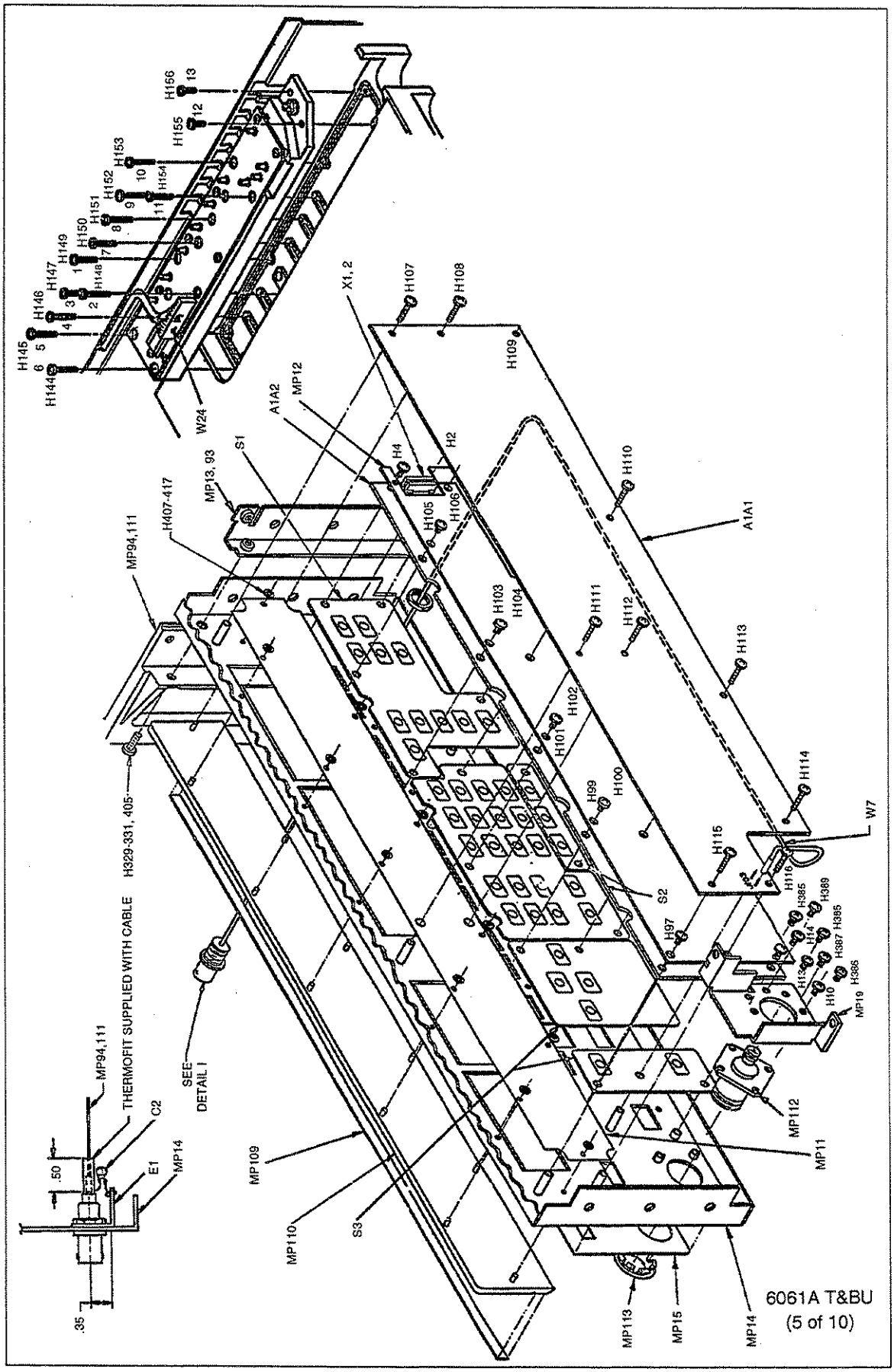

Figure 5-2. 6061A Final Assembly (cont)

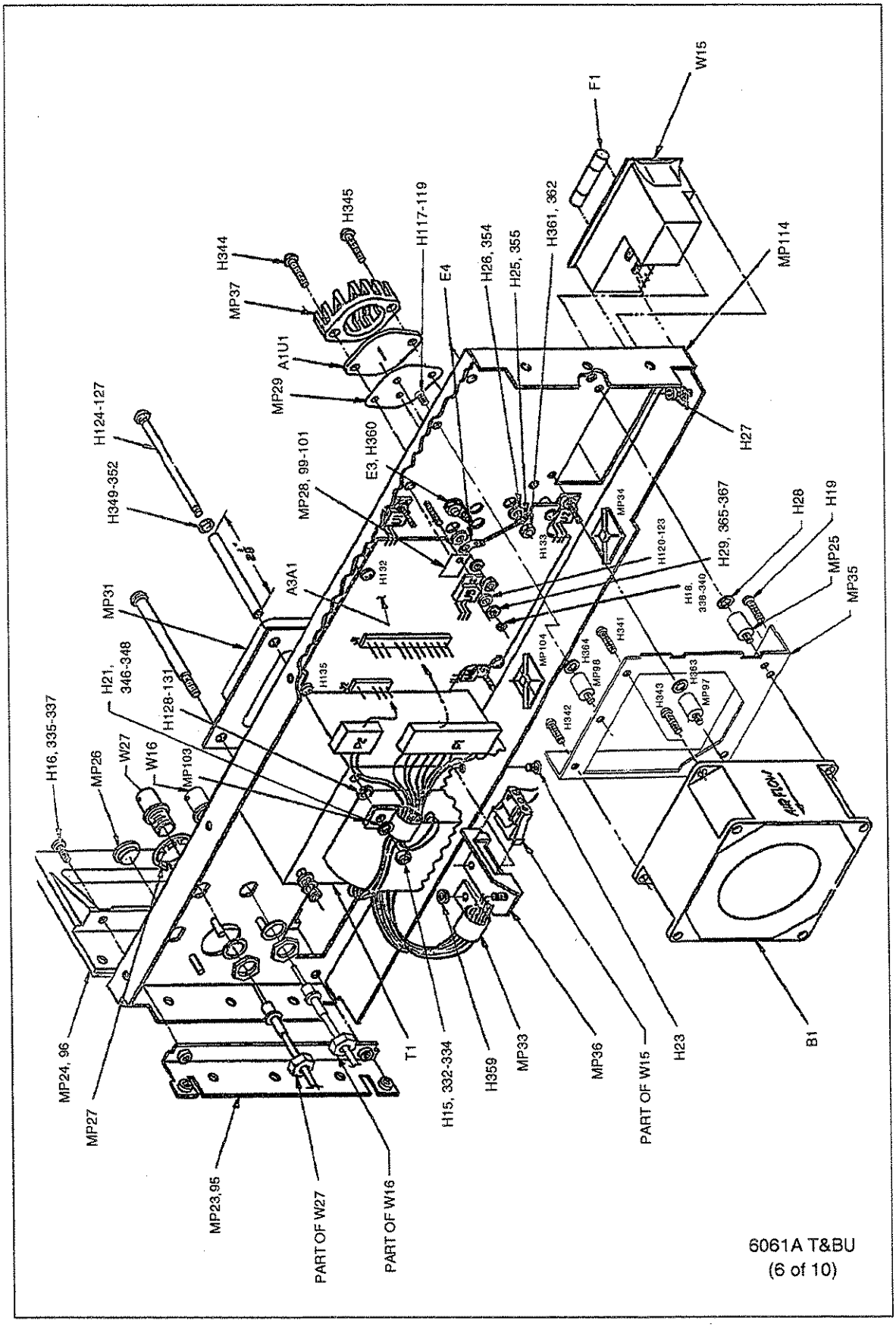

Figure 5-2. 6061A Final Assembly (cont)

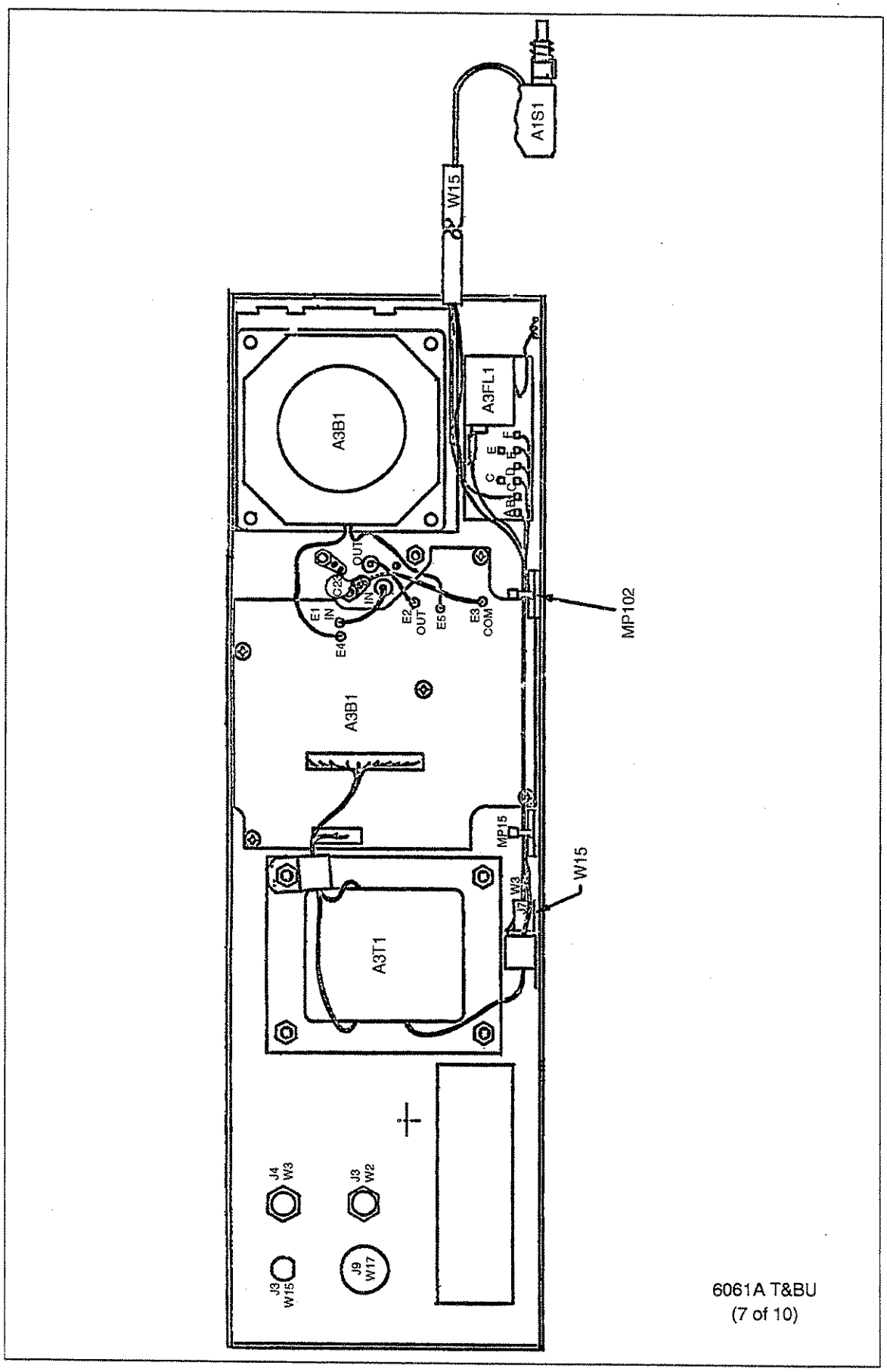

Figure 5-2. 6061A Final Assembly (cont)

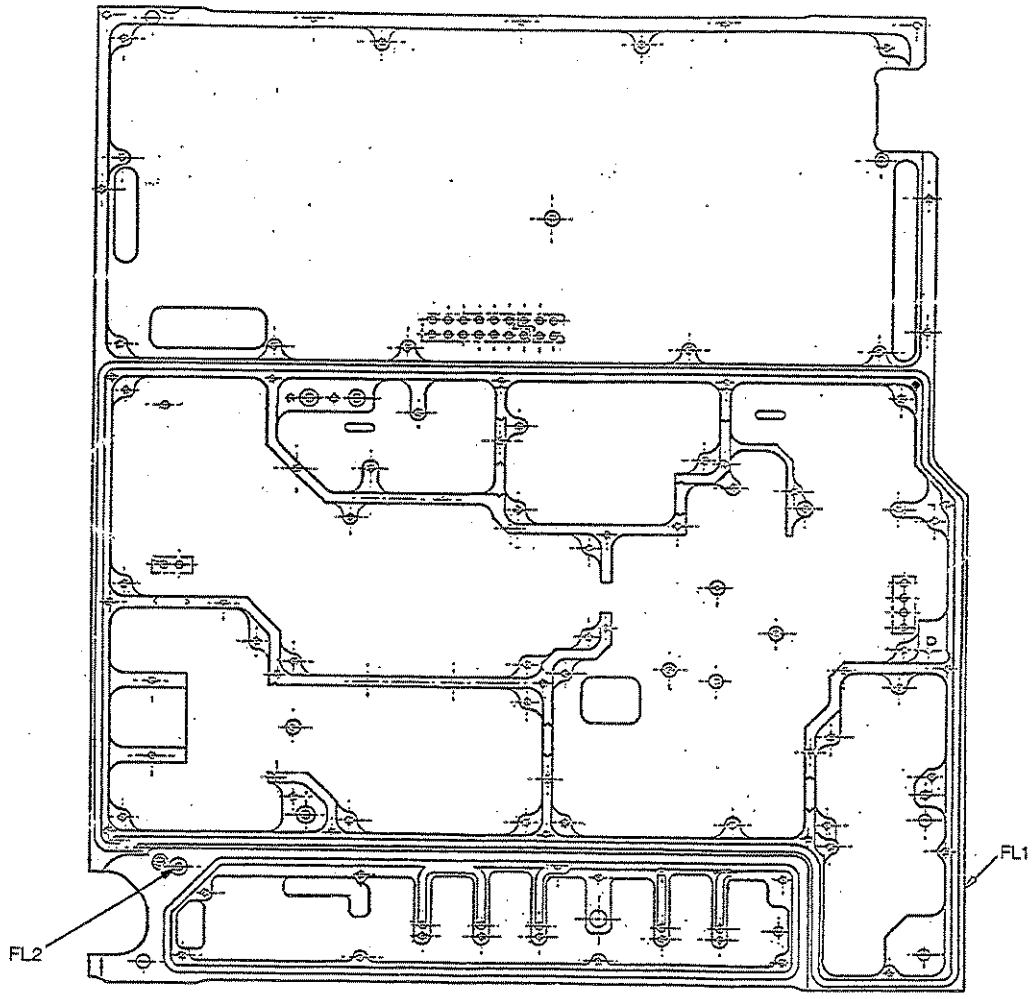

6061A T&BU
(8 of 10)

Figure 5-2. 6061A Final Assembly (cont)

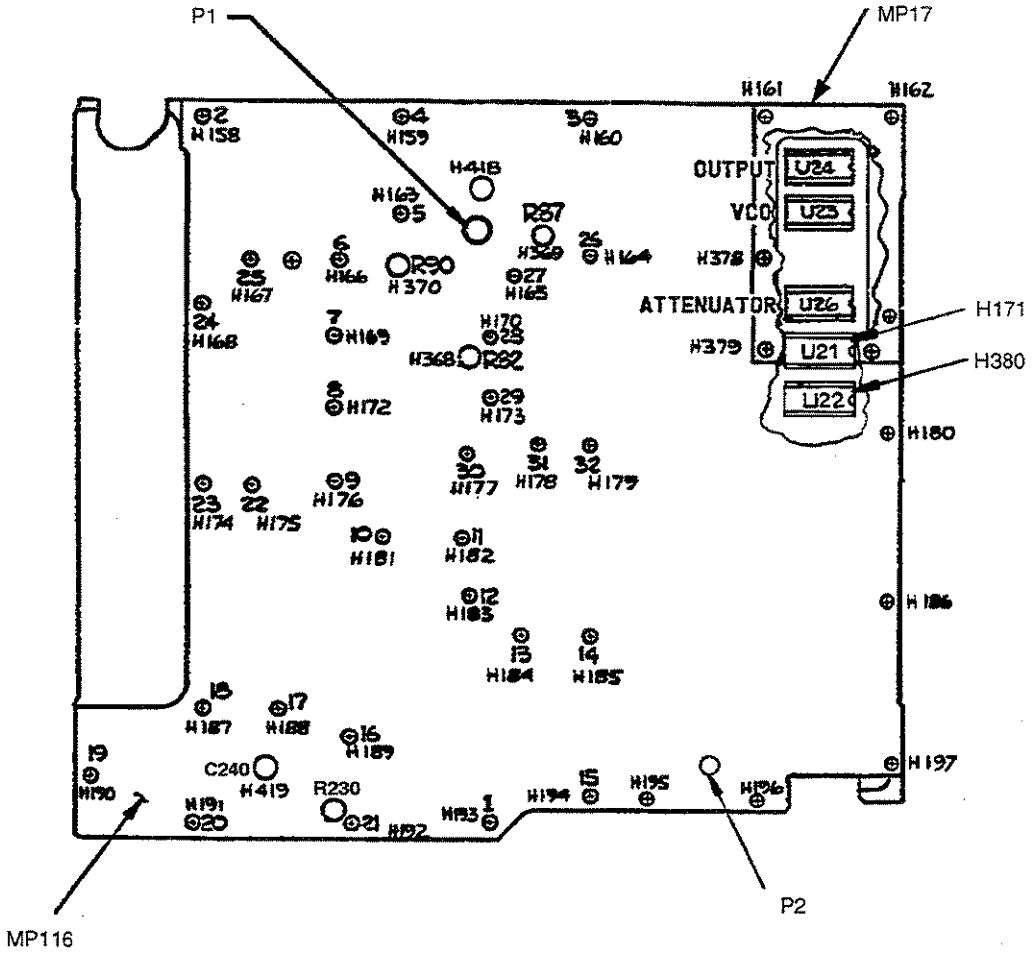

Figure 5-2. 6061A Final Assembly (cont)

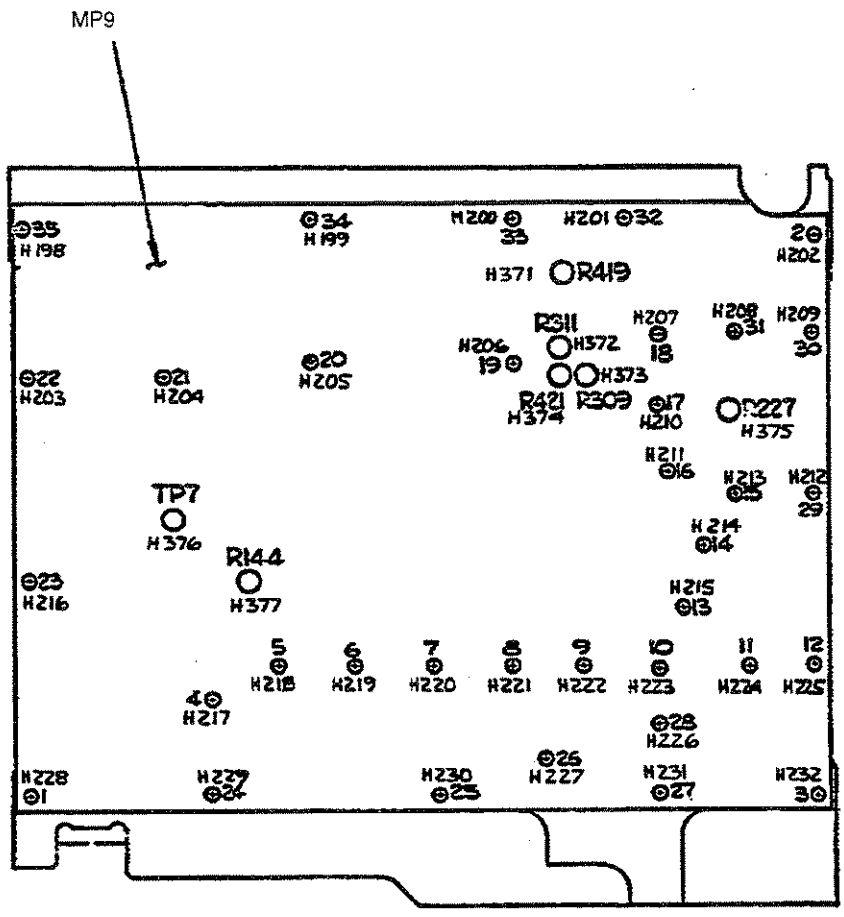

6061A T&BU
(10 of 10)

Figure 5-2. 6061A Final Assembly (cont)

Table 5-3. A1A1 Display PCA

REFERENCE DESIGNATOR	DESCRIPTION	FLUKE STOCK NO	MFRS SPLY CODE	MANUFACTURERS PART NUMBER OR GENERIC TYPE	TOT QTY	NOTES
C 1	CAP,AL,10UF,+-20%,63V,SOLV PROOF	816843	62643	KME63T10RM5X11RP	1	
C 2, 27, 28, C 30	CAP,TA,10UF,+-20%,10V	176214 176214	56289	199D106X0010EA2	4	
C 3, 4, 8- C 14, 16, 17	CAP,POLYES,0.1UF,+-10%,50V	649913 649913	68919	MKS2104K50B	11	
C 5- 7, 15, C 18	CAP,POLYES,0.1UF,+-10%,50V	696484 696484	68919	MKS2-104K50B	5	
C 23, 24	CAP,TA,10UF,+-20%,20V	330662	56289	199D106X0020CA2	2	
C 25, 26	CAP,TA,39UF,+-20%,6V	163915	56289	199D396X0006DA2	2	
C 29	CAP,CER,1000PF +-20%,100V,X7R	816181	04222	SR071C102MAA	1	
DS 1	DISPLAY VACUUM FLUORESCENT FREQUENCY	698456	0BW21	698456	1	
DS 2	DISPLAY VACUUM FLUORESCENT AMPLITUDE	698464	0BW21	698464	1	
H 1- 8	FOOT,RUBBER,ADHES,BLK,.50 SQ,.12 THK	543488	28213	SJ-5008	8	
J 101,104-116	PIN,SINGLE,PWB,0.025 SQ	267500	00779	87623-1	14	
J 102,103	PIN,SINGLE,PWB,0.058 DIA	233411	00779	60599-3	2	
R 1, 2	RES,CF,100K,+-5%,0.25W	573584	59124	CF1/4 104J	2	
R 3	RES,CF,620,+-5%,0.25W	641092	59124	CF1/4 621J	1	
R 4	RES,MF,9.09K,+-1%,0.125W,100PPM	720573	91637	CMF-55 9091F T-1	1	
R 5	RES,MF,31.6K,+-1%,0.125W,100PPM	720060	91637	CMF-55 3162F T-1	1	
R 6	RES,MF,8.06K,+-1%,0.125W,100PPM	720524	91637	CMF-55 8061F T-1	1	
R 7	RES,MF,2K,+-1%,0.125W,100PPM	719815	91637	CMF-55 2001F T-1	1	
R 8	RES,MF,48.7K,+-1%,0.125W,100PPM	720300	91637	CMF-55 4872F T-1	1	
R 9, 10	RES,CF,30K,+-5%,0.25W	574251	59124	CF1/4 303J	2	
R 11- 14	RES,CC,10K,+-10%,0.125W	246975	01121	BB3035	4	
R 15	RES,MF,562,+-1%,0.25W,100PPM	799643	91637	CCF-50 5620F	1	
R 16	RES,VAR,CERM,5K,+-10%,0.5W	288282	80294	3386S-1-502	1	
TP 1	TERM,FASTON,TAB,.110,SOLDER	512889	00779	62395-1	1	
U 1- 5	ϟ IC,LSTTL,OCTAL D F/F,+EDG TRG,W/CLEAR	454892	01295	SN74LS273N	5	
U 6- 10	ϟ IC,BIPLR,8CHNL FLOURESCNT DISPLY DRVR	535799	56289	UDN-6118A	5	
U 11, 17	ϟ IC,LSTTL,RETRG MONOSTAB MULTIVB W/CLR	404186	01295	SN74LS123N	2	
U 12	ϟ IC,LSTTL,DUAL 4 INPUT AND GATE	408708	27014	DM74LS21N	1	
U 13, 15	ϟ IC,TTL,HEX INVERTER W/OPEN COLLECTOR	288605	27014	DM7416N	2	
U 14	ϟ IC,LSTTL,HEX BUFFER W/NOR ENABLE	483800	27014	DM74LS367AN	1	
U 16	ϟ IC,COMPARATOR,DUAL,LO-PWR,8 PIN DIP	478354	27014	LM393N	1	
U 18	ϟ BANDGAP REF DIODE, 1.22V, 35PPM TC	634154	27014	LM385BX-1.2	1	
W 8	CABLE ASSEMBLY, CONTROLLER-DISPLAY	738476	89536	738476	1	
Z 1	RES,CERM,SIP,10 PIN,9 RES,100K,+-2%	461038	91637	CSC10A-01-104G	1	
Z 2	RES,CERM,SIP,10 PIN,9 RES,10K,+-2%	414003	91637	CSC10A-01-103G	1	
NOTES:	ϟ Static sensitive part.					

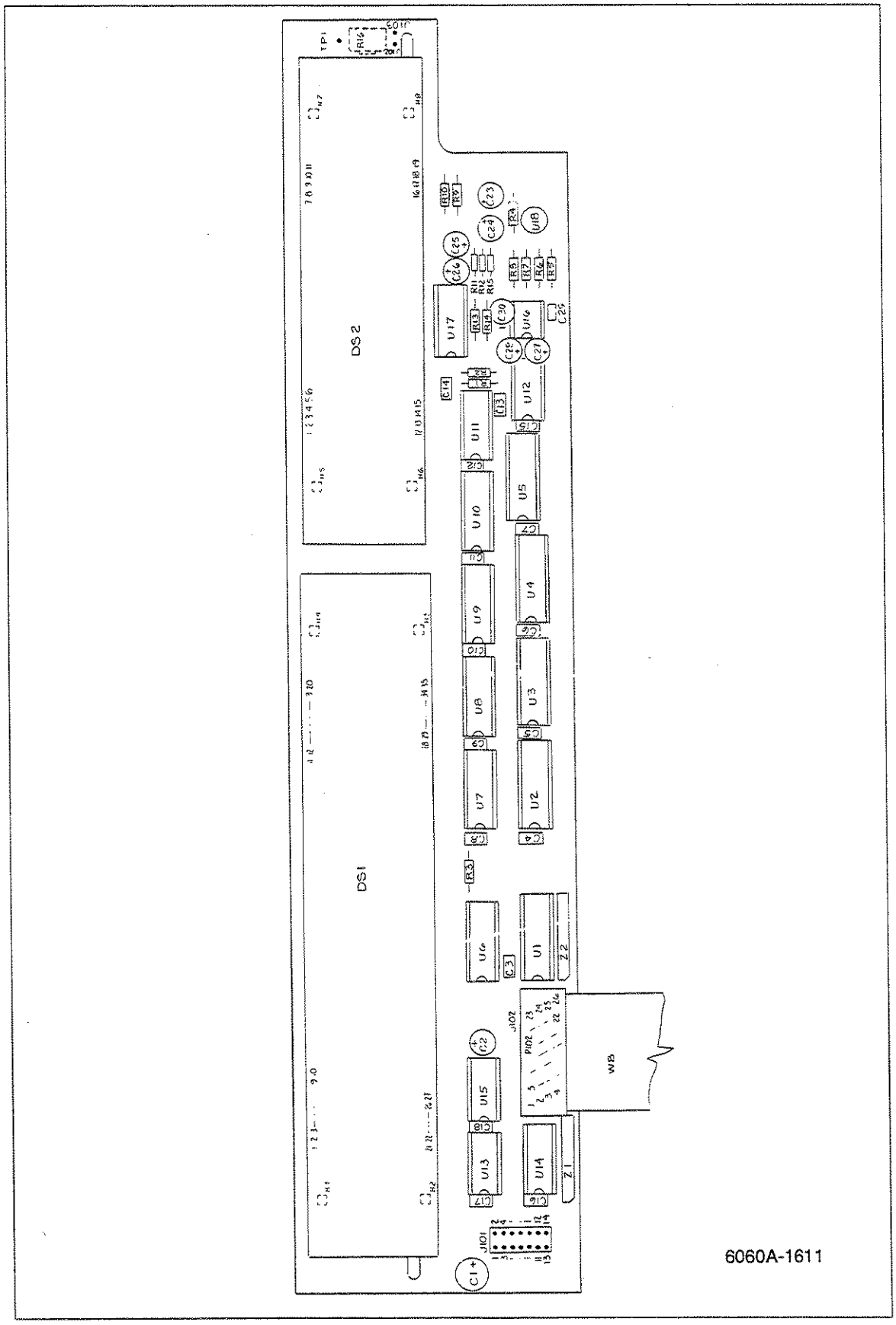

Figure 5-3. A1A1 Display PCA

Table 5-4. A2A1 Synthesizer PCA

REFERENCE DESIGNATOR	DESCRIPTION	FLUKE STOCK NO	MFRS SPLY CODE	MANUFACTURERS PART NUMBER OR GENERIC TYPE	TOT QTY	NOTES
C 1, 2	CAP,CER,2.7PF,+-0.5PF,50V,C0G,0805	519793	04222	08055A2R7DA1.65R	2	
C 3, 4, 6, C 9- 12, 15- C 18, 20, 23, C 62, 98,100, C 181,182,185, C 186,189,190, C 193,196,198, C 199,215	CAP,CER,1000PF,+-20%,100V,X7R	837542 837542 837542 837542 837542 837542 837542 837542	04222	SR151C102MAA	27	
C 5, 14, 22, C 27, 30, 31, C 36, 37, 49, C 55, 59- 61, C 63, 65, 69, C 70, 72- 74, C 76- 81, 83, C 84, 87, 88, C 101-106,108, C 110,112,120, C 122,132,133, C 135,138,140- C 145,151,152, C 157,158,164, C 165,168,169, C 174,175,180, C 184,188,191, C 192,194,195, C 200,244-246, C 250,251,253	CAP,POLYES,0.1UF,+-20%,50V	837526 837526	4U402	MKT1823 104 05 6	75	
C 7, 13, 39, C 40, 43, 52, C 53,205,231- C 234	CAP,CER,470PF, -20%,100V,X7R	837617 837617 837617 837617	04222	SR151C471MAA	12	
C 8, 21	CAP,CER,6.8PF,+-0.25PF,100V,C0H	512327	51406	RPE110C0H6R8C1	2	
C 19	CAP,CER,4.7PF,+-0.25PF,100V,C0H	362772	51406	RPE110C0H4R7C1	1	
C 24, 26, 28, C 64, 89,137, C 139,146,252	CAP,CER,100PF,+-2%,100V,C0G	837609 837609 837609	04222	SR151A101GAA	9	
C 25	CAP,CER,10PF,+-5%,50V,C0G,0805	494781	51406	GRH708C0G100J200PB	1	
C 29, 38,171, C 202	CAP,CER,47PF,+-2%,100V,C0G	812123 812123	04222	SR291A470GAA	4	
C 32	CAP,POLYPR,470PF,+-1%,100V	844811	68919	FKP2 471F 100V	1	
C 33	CAP,POLYPR,100PF,+-1%,100V	844803	68919	FKP2 101F 100V	1	
C 34	CAP,POLYPR,330PF,+-1%,100V	844808	68919	FKP2 331F 100V	1	
C 35	CAP,POLYPR,1000PF,+-1%,100V	844816	68919	FKP2 102F 100V	1	
C 41, 42	CAP,POLYES,0.047UF,+-10%,50V	714709	68919	MKS2473K50B	2	
C 48	CAP,POLYES,0.015UF,+-10%,50V	714691	68919	MKS2-153K50B	1	
C 50,207	CAP,POLYES,0.082UF,+-10%,50V	807859	68919	MKS2-823K50B	2	
C 51	CAP,POLYES,0.1UF,+-10%,50V	649913	68919	MKS2104K50B	1	
C 54, 71, 91, C 127,166	CAP,TA,10UF,+-20%,10V	176214 176214	56289	199D106X0010EA2	5	
C 58, 82,107, C 150	CAP,TA,39UF,+-20%,6V	163915 163915	56289	199D396X0006DA2	4	
C 75, 85, 86, C 95,242,243	CAP,CER,22PF,+-2%,100V,C0G	512871 512871	04222	SR151A220GAA	6	
C 92, 93,128	CAP,TA,10UF,+-20%,35V	417683	56289	199D106X0035DA2	3	
C 94	CAP,TA,10UF,+-20%,50V	800516	56289	199D106X0050FA2	1	
C 99	CAP,POLYST,0.0075UF,2%,100V	484121	84411	1263UW7522%100V	1	
C 109,111	CAP,TA,15UF,+-20%,20V	519686	56289	199D156X0020DA2	2	
C 113,114	CAP,POLYES,0.22UF,+-10%,50V	706028	68919	MKS1224K50B	2	
C 115	CAP,POLYPR,0.0786UF,+-1%,50V	422998	84411	JF-86.07861%50V	1	
C 116,117	CAP,TA,3.3UF,+-20%,20V	436071	56289	199D335X0020BA2	2	
C 118,183,187	CAP,POLYES,0.47UF,+-10%,50V	697409	68919	MKS2474K50B	3	
C 119,121	CAP,CER,1000PF,+-5%,50V,C0G	528539	04222	SR215A102JAA	2	
C 123	CAP,POLYST,0.022UF,+-5%,100V	484147	84411	1263UW2235%100V	1	

Table 5-4. A2A1 Synthesizer PCA (cont)

REFERENCE DESIGNATOR		DESCRIPTION	FLUKE STOCK NO	MFRS SPLY CODE	MANUFACTURERS PART NUMBER OR GENERIC TYPE	TOT QTY	NOTES
C 124		CAP,POLYST,0.056UF,+-5%,100V	284877	84411	1263UW5645%100V	1	
C 125		CAP,POLYST,0.027UF,+-5%,100V	484154	84411	1263UW02735%100V	1	
C 126		CAP,POLYST,0.0015UF,+-2%,100V	484113	84411	1263UW1522%100V	1	
C 129,130		CAP,TA,82UF,+-20%,20V	357392	56289	199D826X0020FA2	2	
C 131		CAP,POLYCA,10UF,+-10%,50V	807164	84411	JF126-10610%50V	1	
C 134		CAP,TA,15UF,+-20%,6V	161935	56289	199D156X0006BA2	1	
C 136		CAP,TA,2.2UF,+-10%,15V	364216	56289	199C225X9015AA2	1	
C 153,154,160, C 254		CAP,CER,4700PF,+-20%,100V,X7R	362871 362871	04222	SR151C472MAA	4	
C 155,156,159, C 161,162,167, C 248		CAP,TA,10UF,+-20%,20V	330662 330662 330662	56289	199D106X0020CA2	7	
C 163		CAP,POLYES,0.022UF,+-10%,50V	715268	68919	MKS2-223K50B	1	
C 170		CAP,CER,33PF,+-2%,100V,C0G	513226	04222	SR151A330GAA	1	
C 173,208,209		CAP,AL,220UF,+50-20%,16V	435990	62643	SM16VB-220	3	
C 176		CAP,POLYES,0.27UF,+-10%,50V	807867	68919	MKS2-274K50B	1	
C 177		CAP,POLYES,0.15UF,+-10%,50V	714790	68919	MKS2-154K50B	1	
C 178		CAP,TA,6.8UF,+-20%,35V	363713	56289	199D685X0035DA2	1	
C 179		CAP,CER,2200PF,+-20%,100V,X7R	358291	04222	SR151C222MAA	1	
C 197,219,227, C 247		CAP,CER,10PF,+-2%,100V,C0G	512343 512343	51406	RPE110A100G1	4	
C 201		CAP,CER,68PF,+-2%,100V,C0G	362756	04222	SR291A680GAA	1	
C 204		CAP,CER,330PF,+-5%,100V,C0G	528620	04222	SR151A331JAA	1	
C 206		CAP,VAR,0.8-10PF,250V,AIR	229930	51406	MVM010W-3	1	
C 210,211,214, C 216,218,224- C 226,228,230		CAP,CER,180PF,+5%,100V,C0G	837625 837625 837625	04222	SR151A181JAA	10	
C 212,222		CAP,CER,1000PF,+-10%,50V,X7R,0805	484378	04222	08055C102KAT060R	2	
C 213,223		CAP,CER,6.8PF,+-0.5PF,50V,C0G,0805	479196	04222	08055A6R8DAT1.65R	2	
C 217		CAP,CER,4.3PF,+-0.5PF,50V,C0G,0805	514216	51406	GRH708C0G4R3D200PB	1	
C 220		CAP,CER,3.9PF,+-0.25PF,100V,C0J	512947	51406	RPE110C0J3R9C1	1	
C 221		CAP,AL,470UF,+-20%,16V,SOLV PROOF	772855	62643	KME16T471M10X12.5MC	1	
C 240		CAP,VAR,1 TO 10PF,250V,AIR	733212	91293	8052	1	
C 249		CAP,TA,47UF,+-20%,10V	733246	56289	199D476X0010DG2	1	
CR 2	ϟ	FALLOUT FROM 387217	731976	89536	731976	1	
CR 5- 8, 17, CR 18, 20, 21	ϟ ϟ	DIODE,SI,BV=75V,IO=150MA,500MW	203323 203323	09214	IN4448	8	
CR 11	ϟ	ZENER,UNCOMP,10.0V,10%,12.5MA,0.4W	113324	04713	1N961A	1	
CR 12- 15, 29	ϟ	DIODE,SI,SCHOTTKY BARRIER,SMALL SIGNL	313247	28480	5082-6264 T25	5	
CR 16	ϟ	ZENER,UNCOMP,8.2V,5%,20.0MA,0.4W	386771	04713	1N756	1	
CR 22, 24, 28		DIODE,SI,VARACTOR,PIV= 30V,HYPER ABRU	722140	33297	IS2208B	3	
CR 26, 27		DIODE,SI,VARACTOR,PIV=28V,18PF	912126	50579	BB505B(Q62702-B37)	2	
CR 30	ϟ	DIODE,SI,PIN,DUAL,SOT-23	821108	50579	BAR14-1(Q62702-A772)	1	
J 2,112		CONN,COAX,SMB(M),PWB OR PANEL	512095	98291	051-051-0429-220	2	
J 101,102		SOCKET,1 ROW,PWB,0.100CTR,9 POS	436774	30035	SS-109-1-09	2	
J 104,107,108, J 110		SOCKET,SINGLE,PWB,FOR 0.034-0.037 PIN	732826 732826	00779	2-332070-7	4	
L 1, 18, 21, L 23, 29- 32, L 34, 65		CHOKE,6TURN	320911 320911 320911	89536	320911	10	
L 2, 71, 72		INDUCTOR,0.10U,+-10%,400MHZ,SHLD	257154	24759	MR-0.10J&K	3	
L 3, 4, 19, L 20, 40- 42, L 44, 56- 58		INDUCTOR,0.68UH,+-10%,221MHZ,SHLD	320937 320937 320937	24759	MR-0.68J&K	11	
L 5, 10, 63, L 64		CORE,TOROID,FERRITE,.047X.138X.118	321182 321182	0LUA3	56-590-65-4B	4	
L 11		INDUCTOR,150UH,+-5%,10.5MHZ,SHLD	174763	24759	MR-150J	1	

Table 5-4. A2A1 Synthesizer PCA (cont)

REFERENCE DESIGNATOR		DESCRIPTION	FLUKE STOCK NO	MFRS SPLY CODE	MANUFACTURERS PART NUMBER OR GENERIC TYPE	TOT QTY	NOTES
L 17		INDUCTOR,220UH,+-5%,9.4MHZ,SHLD	147835	24759	MR-220J	1	
L 43		INDUCTOR,10UH,+-10%,53MHZ,SHLD	249078	24759	MR-10J&K	1	
L 49		INDUCTOR ADJ 8.4MH	704999	89536	704999	1	
L 50		INDUCTOR ADJ 11.1MH	705004	89536	705004	1	
L 54		INDUCTOR,270UH,+-5%,8MHZ,SHLD	186270	24759	MR-270J	1	
L 59		INDUCTOR, 125UH	738484	89536	738484	1	
L 62		INDUCTOR,470UH,+-5%,6.5MHZ,SHLD	147827	24759	MR-470J	1	
L 66		INDUCTOR,0.82UH,+-10%,200MHZ,SHLD	320945	24759	MR-0.82J&K	1	
L 67, 68		CORE,TOROID,FERRITE,.079X.185X.291	219535	25088	B62110-A5030-X025-C	2	
L 70		INDUCTOR,0.044UH,+-15%,500MHZ,SHLD	249110	72259	249110	1	
L 73		INDUCTOR,22UH,+-10%,38MHZ,SHLD	147843	24759	MR-22J&K	1	
MP 1		COMPONENT HOLDER	422865	98159	2829-75-2	1	
MP 2		BRACKET, SMB	774455	89536	774455	1	
P 101,102,111-P 115		SOCKET,SINGLE,PWB,FOR .042-.049 PIN	544056 544056	00779	50871-1	7	
P 118-125		PIN,SINGLE,PWB,0.025 SQ	277418	00779	1-87022-3	8	
Q 1	ϟ	IC,VOLT REG,FIXED,+5 VOLTS,0.1 AMPS	429910	04713	MC78L05ACP	1	
Q 2, 22	ϟ	TRANSISTOR,SI,PNP,SMALL SIGNAL	195974	04713	2N3906	2	
Q 3	ϟ	TRANSISTOR,SI,NPN,HI-FREQ,SMALL SIGNL	723379	61636	BFR96S	1	
Q 4, 5, 41, Q 42	ϟ ϟ	TRANSISTOR,SI,PNP,HI-SPEED SWITCH	369629 369629	04713	MPS5771	4	
Q 10- 12	ϟ	TRANSISTOR,SI,N-JFET,TO-92	604678	17856	J2464	3	
Q 13, 14	ϟ	TRANSISTOR,SI,N-DMOS FET,TO-72	783308	17856	SD215DE	2	
Q 15, 21, 23	ϟ	TRANSISTOR,SI,NPN,SMALL SIGNAL,TO-92	218396	04713	2N3904	3	
Q 16, 17	ϟ	TRANSISTOR,SI,NPN,SMALL SIGNAL	248351	04713	MPS918	2	
Q 18, 19	ϟ	TRANSISTOR,SI,PNP,SMALL SIGNAL	225599	07263	2N4250	2	
Q 20	ϟ	TRANSISTOR,SI,NPN,DARLINGTON	381798	04713	MPSA13	1	
Q 26, 27, 38	ϟ	TRANSISTOR,SI,NPN,SMALL SIGNAL	218081	04713	MPS6520	3	
Q 28	ϟ	TRANSISTOR,SI,PNP,SMALL SIGNAL	418707	07263	MPS6562	1	
Q 32, 35	ϟ	TRANSISTOR,SI,NPN,SMALL SIGNAL	483156	33297	NE02135D-T1	2	
Q 33, 37	ϟ	TRANSISTOR,SI,NPN,HI-FREQ,SMALL SIGNL	535013	04713	BFR91	2	
Q 39, 40	ϟ	TRANSISTOR,SI,N-JFET,UHF/VHF USE	403634	17856	J2765	2	
R 1		RES,CC,68,+-5%,0.5W	178384	01121	EB6805	1	
R 2,159,201, R 209,250		RES,CF,0.51,+-5%,0.25W	381954 381954	59124	CF1/4 0R51J	5	
R 3, 45		RES,CF,51,+-5%,0.125W	740050	59124	RDS21/8-510J	2	
R 5, 14, 15	ϟ	RES,CERM,15,+-5%,.125W,200PPM,1206	756940	91637	CRCW1206-150JB	3	
R 6, 7	ϟ	RES,CERM,390,+-5%,.125W,200PPM,1206	740498	91637	CRCW1206-3900JB	2	
R 9		RES,CC,1K,+-5%,0.125W	643932	01121	BB1025	1	
R 10, 44, 94, R 154,169,170		RES,CF,1K,+-5%,0.25W	343426 343426	59124	CF1/4 102J	6	
R 11, 73		RES,CF,3.3K,+-5%,0.25W	348813	59124	CF1/4 332J	2	
R 12,102,119, R 129		RES,CF,10K,+-5%,0.25W	348839 348839	59124	CF1/4 102J	4	
R 13		RES,CC,270,+-5%,0.5W	159616	01121	EB2715	1	
R 20,147,186, R 218,219		RES,MF,47.5,+-1%,0.25W,100PPM	799700 799700	91637	CCF-50 47R5F	5	
R 21, 22		RES,CC,15,+-10%,0.125W	261800	01121	BB1531	2	
R 23, 24, 40, R 228		RES,CF,56,+-5%,0.25W	342618 342618	59124	CF1/4 560J	4	
R 25, 32		RES,MF,51.1,+-1%,0.25W,100PPM	799650	91637	CCF-50 51R1F	2	
R 26, 31, 65, R 101		RES,MF,100,+-1%,0.125W,100PPM	168195 168195	91637	CMF-55 1000F T-1	4	
R 27		RES,MF,18.2K,+-1%,0.125W,100PPM	236810	91637	CMF-55 1822F T-1	1	
R 28		RES,MF,10.7K,+-1%,0.125W,100PPM	293613	91637	CMF-55 1072F T-1	1	

Table 5-4. A2A1 Synthesizer PCA (cont)

REFERENCE DESIGNATOR	DESCRIPTION	FLUKE STOCK NO	MFRS SPLY CODE	MANUFACTURERS PART NUMBER OR GENERIC TYPE	TOT QTY	NOTES
R 29	RES,MF,11.3K,+-1%,0.125W,100PPM	293639	91637	CMF-55 1132F T-1	1	
R 30	RES,MF,28.7K,+-1%,0.125W,100PPM	235176	91637	CMF-55 2872F T-1	1	
R 33,161	RES,CF,51,+-5%,0.25W	414540	59124	CF1/4 510J	2	
R 39	RES,CF,200,+-5%,0.25W	441451	59124	CF1/4 201J	1	
R 41	RES,CF,270,+-5%,0.25W	348789	59124	CF1/4 271J	1	
R 42	RES,CF,180,+-5%,0.25W	441436	59124	CF1/4 181J	1	
R 43	RES,CF,91,+-5%,0.25W	441683	59124	CF1/4 910J	1	
R 46,165,167, R 171,172,177, R 211	RES,MF,511,+-1%,0.25W,100PPM	799684 799684 799684	91637	CCF-50 5110F	7	
R 48,117,118	RES,CF,220,+-5%,0.25W	342626	59124	CF1/4 221J	3	
R 49	RES,MF,39.2,+-1%,0.25W,100PPM	799775	91637	CCF-50 39R2F	1	
R 50	RES,MF,82.5,+-1%,0.25,100PPM	799783	91637	CCF-50 82R5F	1	
R 51	RES,MF,130,+-1%,0.25W,100PPM	854406	91637	CCF-50 1300F	1	
R 55	RES,CF,2.7K,+-5%,0.25W	386490	59124	CF1/4 272J	1	
R 56- 58, 66- R 69,124,127, R 133-139,210, R 212	RES,MF,100,+-1%,0.25W,100PPM	799668 799668 799668 799668	91637	CCF-50 1000F	18	
R 72	RES,CF,51K,+-5%,0.25W	376434	59124	CF1/4 513J	1	
R 74,100,103	RES,CF,1.5K,+-5%,0.25W	343418	59124	CF1/4 152J	3	
R 75	RES,MF,4.22K,+-1%,0.125W,100PPM	168245	91637	CMF-55 4221F T-1	1	
R 76	RES,MF,10K,+-1%,0.125W,100PPM	168260	91637	CMF-55 1002F T-1	1	
R 77	RES,MF,90K,+-0.1%,0.25W,50PPM	225763	91637	CMF-60 9002B T-2	1	
R 78	RES,MF,9K,+-0.1%,0.25W,50PPM	236695	91637	CMF-60 9001C T-2	1	
R 79	RES,MF,1K,+-0.1%,0.25W,50PPM	225813	91637	CMF-60 1001B T-2	1	
R 80, 88	RES,MF,4.99K,+-1%,0.125W,100PPM	168252	91637	CMF-55 4991F T-1	2	
R 81,182,191	RES,MF,1K,+-1%,0.125W,100PPM	168229	91637	CMF-55 1001F T-1	3	
R 82, 87	RES,VAR,CERM,5K,+-10%,0.5W	327569	80294	3386R-1-502	2	
R 83	RES,CF,75K,+-5%,0.25W	394130	59124	CF1/4 753J	1	
R 84	RES,MF,6.49K,+-1%,0.125W,100PPM	294900	91637	CMF-55 6491F T-1	1	
R 85,223	RES,MF,6.04K,+-1%,0.125W,100PPM	285189	91637	CMF-55 6041F T-1	2	
R 86	RES,CF,200K,+-5%,0.25W	441485	59124	CF1/4 204J	1	
R 89	RES,MF,5.11K,+-1%,0.125W,100PPM	294868	91637	CMF-55 5111F T-1	1	
R 90	RES,VAR,CERM,1K,+-10%,0.5W	275750	80294	3386R-1-102	1	
R 91	RES,MF,3.83K,+-1%,0.125W,100PPM	235143	91637	CMF-55 3831F T-1	1	
R 92, 93,113- R 115	RES,MF,499,+-1%,,0.125W,100PM	168211 168211	91637	CMF-55 4990F T-1	5	
R 95	RES,CF,9.1K,+-5%,0.25W	441691	59124	CF1/4 912J	1	
R 96	RES,CF,820,+-5%,0.25W	442327	59124	CF1/4 821J	1	
R 97	RES,CF,6.8K,+-5%,0.25W	368761	59124	CF1/4 682J	1	
R 98,121	RES,CF,100,+-5%,0.25W	348771	59124	CF1/4 101J	2	
R 99	RES,MF,1.5K,+-1%,0.125W,100PPM	313098	91637	CMF-55 1501F T-1	1	
R 104	RES,VAR,CERM,20K,+-10%,0.5W	335760	80294	3386R-1-203	1	
R 105	RES,CF,10K,+-5%,0.25W	697102	59124	CF1/4 103J	1	
R 106	RES,CF,470,+-5%,0.25W	854567	59124	CF1/4 471J	1	
R 107	RES,MF,3.48K,+-1%,0.125W,100PPM	260687	91637	CMF-55 3481F T-1	1	
R 108,116	RES,MF,1.27K,+-1%,0.125W,100PPM	267369	91637	CMF-55 1271F T-1	2	
R 109,111	RES,CC,510,+-5%,0.5W	108951	01121	EB5115	2	
R 110,112	RES,CF,36,+-5%,0.25W	442236	59124	CF1/4 360J	2	
R 120,163	RES,CF,4.7K,+-5%,0.25W	348821	59124	CF1/4 472J	2	
R 122	RES,CF,8.2K,+-5%,0.25W	441675	59124	CF1/4 822J	1	
R 123	RES,CF,33K,+-5%,0.25W	348888	59124	CF1/4 333J	1	
R 125	RES,VAR,CERM,5K,+-20%,0.5W	226084	80294	3329H-1-502	1	
R 145	RES,MF,301,+-1%,0.25W,100PPM	799916	91637	CCF-50 3010F	1	

Table 5-4. A2A1 Synthesizer PCA (cont)

REFERENCE DESIGNATOR	DESCRIPTION	FLUKE STOCK NO	MFRS SPLY CODE	MANUFACTURERS PART NUMBER OR GENERIC TYPE	TOT QTY	NOTES
R 146	RES,MF,18.2,+-1%,0.25W,100PPM	799817	91637	CCF-50 18R2F	1	
R 148,153,162, R 225,226	RES,MF,10K,+-1%,0.25W,100PPM	799635 799635	91637	CCF-50 1002F	5	
R 149,217,240	RES,CC,330,+-5%,0.125W	643965	01121	BB3315	3	
R 150	RES,CC,1.2K,+-10%,0.125W	115329	01121	BB1221	1	
R 151,222	RES,MF,1K,+-1%,0.25W,100PPM	799791	91637	CCF-50 1001F	2	
R 152	RES,CF,470,+-5%,0.25W	343434	59124	CF1/4 471J	1	
R 160	RES,CF,750,+-5%,0.25W	441659	59124	CF1/4 751J	1	
R 164	RES,CF,300,+-5%,0.25W	441519	59124	CF1/4 301J	1	
R 178,179	RES,CF,5.6,+-5%,0.25W	441618	59124	CF1/4 5R6J	2	
R 180,192	RES,MF,178,+-1%,0.125W,100PPM	442996	91637	CMF-55 1780F T-1	2	
R 181,193	RES,MF,1.05K,+-1%,0.125W,100PPM	293530	91637	CMF-55 1051F T-1	2	
R 183,194	RES,MF,3.24K,+-1%,0.125W,100PPM	223578	91637	CMF-55 3241F T-1	2	
R 184,195,197, R 200	RES,MF,182,+-1%,0.25W,100PPM	799726 799726	91637	CCF-50 1820F	4	
R 185,199	RES,MF,249,+-1%,0.125W,100PPM	168203	91637	CMF-55 2490F T-1	2	
R 187,189	RES,MF,121,+-1%,0.25W,100PPM	799734	91637	CCF-50 1210F	2	
R 188,196	RES,MF,12.1,+-1%,0.25W,100PPM	799742	91637	CCF-50 12R1F	2	
R 190	RES,CF,5.1,+-5%,0.25W	441287	59124	CF1/4 5R1J	1	
R 198,241	RES,MF,30.1,+-1%,0.25W,100PPM	799692	91637	CCF-50 30R1F	2	
R 213,214,242	RES,MF,200,+-1%,0.25W,100PPM	799759	91637	CCF-50 2000F	3	
R 220	RES,CC,270,+-5%,0.125W	512764	01121	BB2715	1	
R 221	RES,CF,15K,+-5%,0.25W	348854	59124	CF1/4 153J	1	
R 224	RES,MF,15K,+-1%,0.125W,100PPM	285296	91637	CMF-55 1502F T-1	1	
R 227	RES,MF,100K,+-1%,0.125W,100PPM	248807	91637	CMF-55 1003F T-1	1	
R 229	RES,MF,9.09K,+-1%,0.125W,100PPM	221663	91637	CMF-55 9091F T-1	1	
R 230	RES,VAR,CERM,2K,+-20%,0.5W	226076	80294	3329H-1-202	1	
R 231	RES,MF,4.02K,+-1%,0.125W,100PPM	235325	91637	CMF-55 4021F T-1	1	
R 232	RES,CF,1.3K,+-5%,0.25W	441394	59124	CF1/4 132J	1	
R 233	RES,MF,681,+-1%,0.25W,100PPM	782052	91637	CCF-50 6810F	1	
R 234	RES,CC,15K,+-5%,0.25W	148114	01121	CB1535	1	
R 235	RES,CF,1M,+-5%,0.25W	348987	59124	CF1/4 105J	1	
R 236	RES,CC,560,+-5%,0.125W	782839	91637	BB5615	1	
R 237	RES,CC,100,+-10%,0.125W	261826	01121	BB1011	1	
R 238,239	RES,CC,390,+-5%,0.125W	782821	91637	BB3915	2	
TO 35	TERM,FASTON,TAB,.110,SOLDER	512889	00779	62395-1	15	
TP 1, 3, 14, TP 17, 35, 55	PIN,SINGLE,PWB,0.025 SQ	267500 267500	00779	87623-1	6	
U 1	ϟ IC,BIP,2.4 GHZ DIVIDE BY 2 PRESCALER	887018	33297	UPB581C	1	
U 2	ϟ IC,AMPLIFIER,WIDEBAND,1000 MHZ,SOT143	887013	33297	UPC1688G	1	
U 3	ϟ IC,AMPLIFIER,WIDEBAND,1900 MHZ,SOT143	887005	33297	UPC1675G	1	
U 7, 8	MIXER,DOUBLE BALANCED,1 - 500 MHZ	733105	1AV65	SBL-1-27	2	
U 9	ϟ IC,BPLR,MONOLITHIC VHF-UHF AMPLIFIER	723387	33297	UPC1654A	1	
U 10	ϟ IC,OP AMP,QUAD,JFET INPUT,14 PIN DIP	483438	01295	TL084CN	1	
U 15, 58	ϟ IC,STTL,100MHZ DIV BY 2,DIV BY 5 CNTR	473835	01295	SN74S196N	2	
U 16	ϟ IC,LSTTL,DUAL DIV BY 2,DIV BY 5 CNTR	483594	01295	SN74LS390N	1	
U 17	ϟ IC,STTL, 360 CELL GATE ARRAY	723718	61271	MB112T301	1	
U 18, 62, 63	ϟ IC,ECL,DUAL D M/S F/F,+EDG TRG	837252	04713	MC10H131L	3	
U 19	ϟ IC,ECL,QUAD 2 INPUT NOR GATE	851613	04713	MC10H102P	1	
U 20	ϟ IC,ECL,600MHZ DIV BY 10,DIV BY 11 CNT	504423	07263	11C90DCQR	1	
U 26, 30- 32	ϟ IC,LSTTL,OCTAL D F/F,+EDG TRG,W/CLEAR	454892	01295	SN74LS273N	4	

Table 5-4. A2A1 Synthesizer PCA (cont)

REFERENCE DESIGNATOR	DESCRIPTION	FLUKE STOCK NO	MFRS SPLY CODE	MANUFACTURERS PART NUMBER OR GENERIC TYPE	TOT QTY	NOTES
U 27, 29	ϟ IC,CMOS,10BIT DAC,10BIT ACCUR,CUR OUT	802280	24355	AD7533LN	2	
U 28	ϟ IC,OP AMP,DUAL,JFET INPUT,8 PIN DIP	495192	27014	LF353N	1	
U 33	ϟ IC,STTL, 360 CELL GATE ARRAY	723700	61271	MB112T302	1	
U 34	ϟ IC,FTTL,QUAD 2 INPUT NAND GATE	654640	04713	MC74F00N	1	
U 35, 66	ϟ IC,FTTL,DUAL D F/F,+EDG TRG,W/CL&SET	659508	04713	MC74F74N	2	
U 37	ϟ IC,LSTTL,3-8 LINE DCDR W/ENABLE	407585	27014	DM74LS138N	1	
U 38	ϟ IC,LSTTL,OCTL LINE DRVR W/3-STATE OUT	429035	01295	SN74LS244N	1	
U 41	ϟ IC,OP AMP,QUAD JFET INPUT,14 PIN DIP	659748	01295	TL074CN	1	
U 42	ϟ IC,COMPARATOR,QUAD,14 PIN DIP	387233	27014	LM339N	1	
U 43, 44, 59, U 68	ϟ IC,STTL,DUAL D F/F,+EDG TRG,W/SET&CLR ϟ	418269 418269	01295	SN74S74N	4	
U 45, 54, 65	ϟ IC,STTL,QUAD 2 INPUT NAND GATE	363580	01295	SN74S00N	3	
U 46	ϟ IC,ARRAY,5 TRANS,5 ISO: 2-PNP,3-NPN	418954	34371	CA3096E	1	
U 47, 71	ϟ IC,LSTTL,RETRG MONOSTAB MULTIVB W/CLR	412734	27014	DM74LS122N	2	
U 48, 60, 69	ϟ IC,OP AMP,JFET INPUT,8 PIN DIP	472779	27014	LF356N	3	
U 49	ϟ IC,OP AMP,SELECTED GBW 600KHZ	418566	18324	LM358	1	
U 50	ϟ ISOLATOR,OPTO,LED TO TRANSISTOR,DUAL	454330	25088	ILCT-6-254	1	
U 55	ϟ IC,STTL,HEX INVERTER	418004	27014	DM74S04N	1	
U 61	ϟ IC,ECL,DIVIDE BY 4 PRESCALER	722157	34371	CA3199E	1	
U 64	ϟ IC,ECL,TRIPLE 2/3 INPUT OR/NOR GATE	723437	04713	MC10105P1	1	
U 67	ϟ IC,COMPARATOR,HI-SPEED,14 PIN DIP	386920	27014	LM361N	1	
U 70	ϟ IC,CMOS, SPDT ANALOG SWITCH	723742	17856	DG301ACJ	1	
W 1, 2	CABLE ASSY, RF JUMPER	716985	89536	716985	2	
XU 48, 50	SOCKET,IC,8 PIN	478016	00779	2-640463-1	2	
Y 1	CRYSTAL,10MHZ,+-0.001%,HC-35/U	536565	71034	BK3-1B	1	
Z 1	RES,CERM,DIP,16 PIN,8 RES,10K,1%	501841	80294	4116R-001-103-F	1	
Z 5	RES,CERM,SIP,10 PIN,9 RES,510,+-2%	478800	91637	CSC10A-01-511G	1	
Z 6	RES,CERM,SIP,6 PIN,5 RES,100K,+-2%	412726	91637	CSC06A-03-104G	1	
Z 9	RES,CERM,DIP,16 PIN,8 RES,1K,+-5%	358119	91637	MDP16-03-102J	1	
Z 10	RES,CERM,SIP,6 PIN,5 RES,510,+-2%	459974	91637	CSC06A-01-511G	1	
NOTES:	ϟ Static sensitive part.					

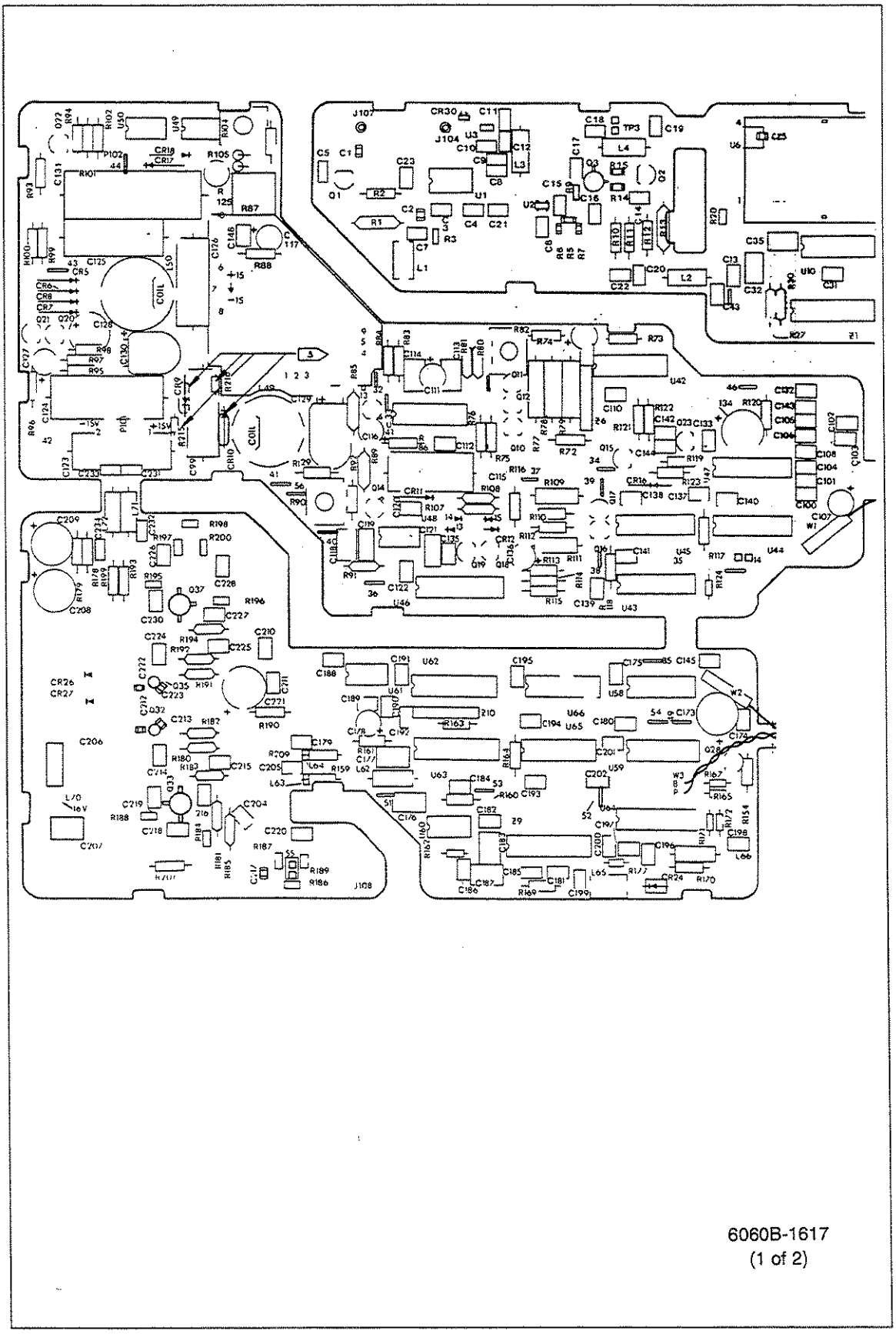

Figure 5-4. A2A1 Synthesizer PCA

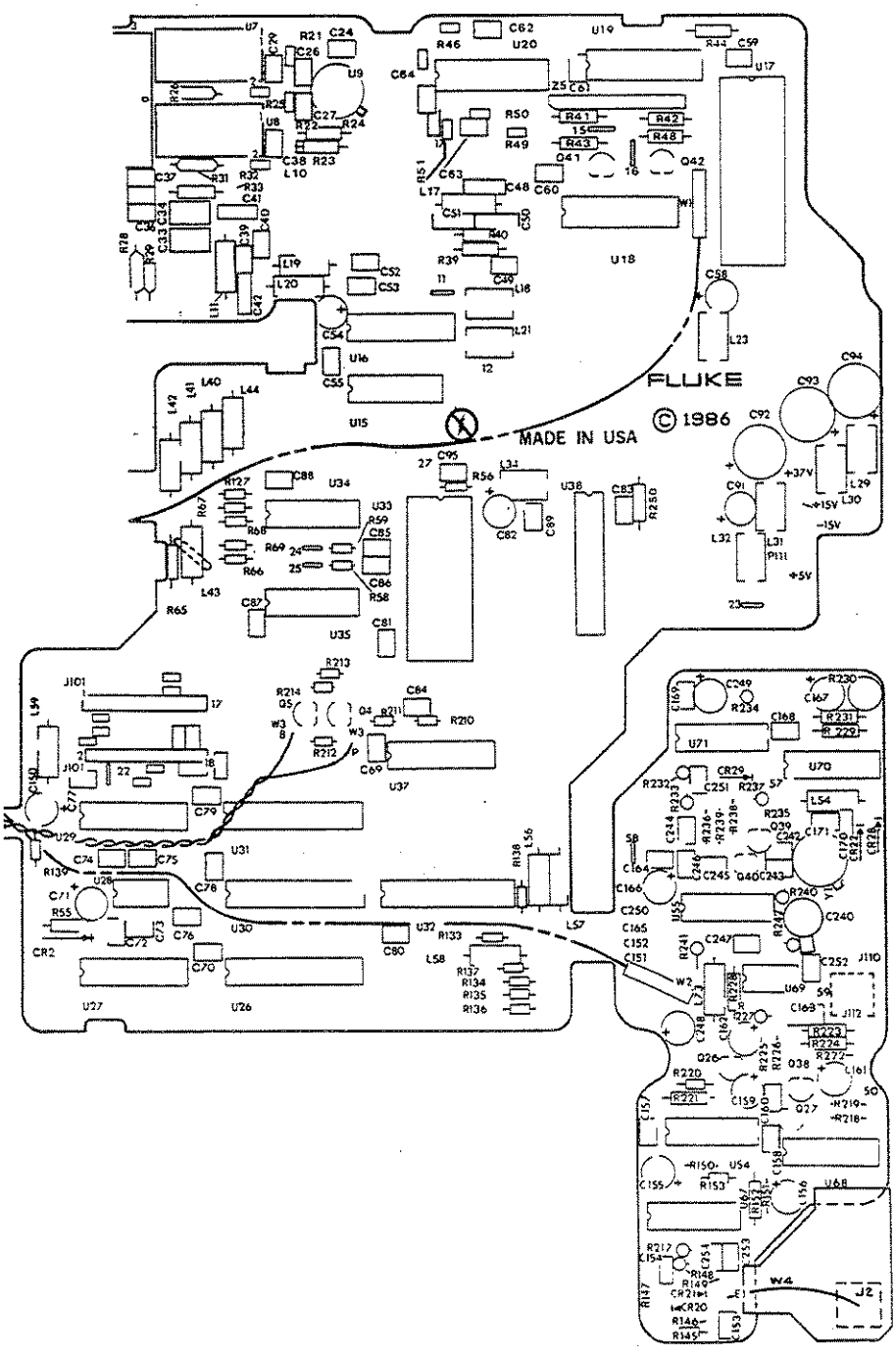

Figure 5-4. A2A1 Synthesizer PCA (cont)

Table 5-5. A2A2 VCO PCA

REFERENCE DESIGNATOR		DESCRIPTION	FLUKE STOCK NO	MFRS SPLY CODE	MANUFACTURERS PART NUMBER OR GENERIC TYPE	TOT QTY	NOTES
C 1		CAP,CER,1800PF,+-5%,50V,C0G	528547	04222	SR215A182JAA	1	
C 2, 5, 6, C 9, 11, 14, C 19, 22, 26- C 28, 31, 32, C 34, 37- 40		CAP,CER,100PF,+-5%,50V,C0G,0805	514133 514133 514133 514133 514133	51406	GRH708C0G101J050PB	18	
C 3, 4, 7		CAP,PORC,1.8PF,+-0.1PF,50V,0505	800854	51406	MA181R8B	3	
C 8		CAP,PORC,3.6PF,+-0.1PF,50V,0505	806380	51406	MA183R6B	1	
C 10, 15, 18, C 23, 29, 33		CAP,POLYES,0.1UF,+-20%,50V	732883 732883	68919	MKS02104P50V	6	
C 13, 25		CAP,CER,4.7PF,+-0.25PF,50V,C0G,0805	806760	04222	08055A4R7CAT	2	
C 16		CAP,CER,3.3PF,+-0.5PF,50V,C0G,0805	514208	51406	GRH708C0G3R3D200PB	1	
C 17		CAP,CER,1.8PF,+-0.25PF,50V,C0G,0805	806745	04222	08055A1R8CAT	1	
C 21		CAP,CER,10PF,+-5%,50V,C0G,0805	494781	51406	GRH708C0G100J200PB	1	
C 24		CAP,CER,2.7PF,+-0.25PF,50V,C0G,0805	806752	04222	08055A2R7CAT	1	
C 35, 36		CAP,AL,470UF,+-20%,16V,SOLV PROOF	772855	62643	KME16T471M10X12.5MC	2	
CR 1, 2		DIODE,SI,VARACTOR,PIV=28V,18PF	912126	50579	BB505B(Q62702-B37)	2	
CR 3, 4, 6, CR 9- 11	ϟ ϟ	DIODE,SI,PI,RF CUR CONTR,EPXY STRPLN	773234 773234	59365	MX2070	6	
CR 7, 13	ϟ	DIODE,SI,PIN,RF SWITCHING	904693	28480	QPND-4241	2	
CR 8	ϟ	DIODE,SI,PIN,RF SWITCHING	875591	8A233	BA483-143	1	
L 1, 3, 5, L 7, 8		INDUCTOR,0.12UH,+-10%,1000MHZ	800912 800912	52763	S5087227-013	5	
L 2, 4, 6		INDUCTOR,0.18UH,+-10%,770MHZ	800920	52763	S5087227-213	3	
P 201,202,205		SOCKET,SINGLE,PWB,FOR .042-.049 PIN	544056	00779	50871-1	3	
P 203		SOCKET,SINGLE,PWB,FOR 0.012-0.022 PIN	376418	22526	75060-012	1	
P 204		PIN TEST BASE	698472	20584	698472	1	
Q 1	ϟ	TRANSISTOR,SI,NPN,SM SIGNAL,HI FT	535153	33297	NE21935	1	
Q 2	ϟ	TRANSISTOR,SI,NPN,SMALL SIGNAL	483156	33297	NE02135D-T1	1	
R 1, 36	ϟ	RES,CERM,1.2K,+-5%,.125W,200PPM,1206	746412	91637	CRCW1206-1201JB	2	
R 2	ϟ	RES,CERM,1K,+-5%,.125W,200PPM,1206	745992	91637	CRCW1206-1001JB	1	
R 3, 4, 17	ϟ	RES,CERM,2K,+-5%,.125W,200PPM,1206	746461	91637	CRCW1206-2001JB	3	
R 5, 11		RES,MF,200,+-1%,0.25W,100PPM	799759	91637	CCF-50 2000F	2	
R 6		RES,MF,464,+-1%,0.25W,100PPM	801282	91637	CCF-50 4640F	1	
R 7, 13		RES,MF,301,+-1%,0.25W,100PPM	799916	91637	CCF-50 3010F	2	
R 8, 10, 14, R 16	ϟ ϟ	RES,CERM,82,+-5%,.125W,200PPM,1206	740480 740480	91637	CRCW1206-82R0JB	4	
R 9, 15	ϟ	RES,CERM,91,+-5%,.125W,200PPM,1206	756338	91637	CRCW1206-91R0JB	2	
R 12, 31		RES,MF,681,+-1%,0.25W,100PPM	782052	91637	CCF-50 6810F	2	
R 18	ϟ	RES,CERM,390,+-5%,.125W,200PPM,1206	740498	91637	CRCW1206-3900JB	1	
R 19	ϟ	RES,CERM,47,+-5%,.125W,200PPM,1206	720631	91637	CRCW1206-47R0JB	1	
R 20	ϟ	RES,CERM,120,+-5%,.125W,200PPM,1206	747683	91637	CRCW1206-1200JB	1	
R 21, 25, 27		RES,CF,240,+-5%,0.25W	376624	59124	CF1/4 241J	3	
R 22		RES,CF,91,+-5%,0.25W	441683	59124	CF1/4 910J	1	
R 23	ϟ	RES,CERM,180,+-5%,.125W,200PPM,1206	720649	91637	CRCW1206-1800JB	1	
R 24	ϟ	RES,CERM,68,+-5%,.125W,200PPM,1206	747675	91637	CRCW1206-68R0JB	1	
R 26		RES,CF,47,+-5%,0.25W	441592	59124	CF1/4 470J	1	
R 28, 29		RES,CF,20,+-5%,0.25W	442202	59124	CF1/4 20R0J	2	
R 30		RES,MF,10K,+-1%,0.25W,100PPM	799635	91637	CCF-50 1002F	1	
R 32, 35	ϟ	RES,CERM,330,+-5%,.125W,200PPM,1206	746370	91637	CRCW1206-3300JB	2	
R 33, 34		RES,CF,56,+-5%,0.25W	342618	59124	CF1/4 560J	2	
U 1- 3	ϟ	IC,BPLR,MONOLITHIC UWAVE AMP,SEL GAIN	867049	28480	QPMA-0385	3	
U 4	ϟ	IC,OP AMP,DUAL,JFET INPUT,8 PIN DIP	495192	27014	LF353N	1	
W 1		CABLE ASSY, VCO	798207	89536	798207	1	

Table 5-5. A2A2 VCO PCA (cont)

REFERENCE DESIGNATOR	DESCRIPTION	FLUKE STOCK NO	MFRS SPLY CODE	MANUFACTURERS PART NUMBER OR GENERIC TYPE	TOT QTY	NOTES
NOTES:	ϟ Static sensitive part. THE FOLLOWING COMPONENTS ARE NON-FIELD REPLACEABLE: C1 ,3-6,8,10,11,14,15,18,19,21,26,27,29,31,32,36,37 CR 1-4 Q1 -4 R1 -4,16-19,25,30					

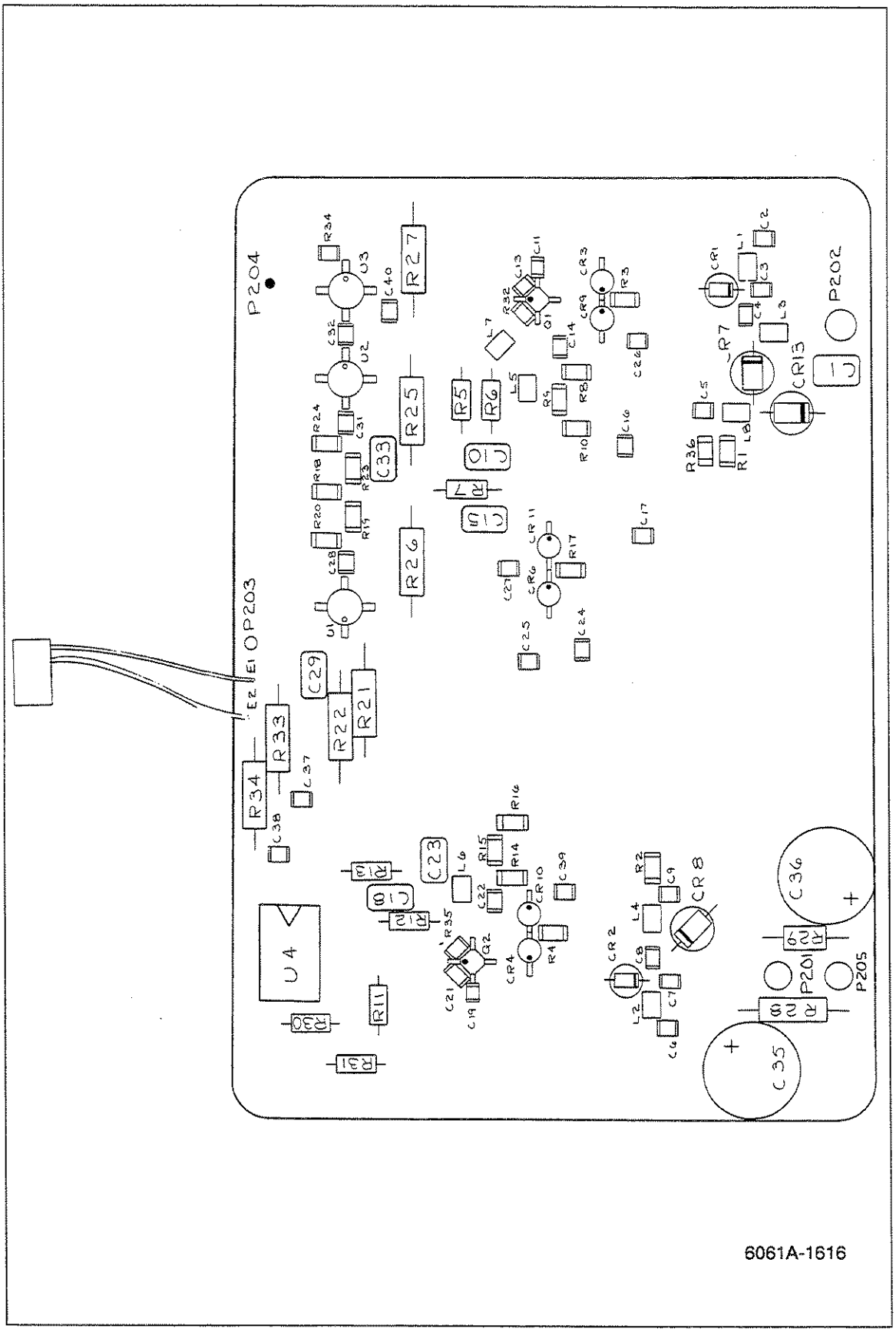

Figure 5-5. A2A2 VCO PCA

Table 5-6. A2A4 Output PCA

REFERENCE DESIGNATOR	DESCRIPTION	FLUKE STOCK NO	MFRS SPLY CODE	MANUFACTURERS PART NUMBER OR GENERIC TYPE	TOT QTY	NOTES
C 101,104,106, C 115-117,137, C 138,144,151, C 152,154,231, C 238-240,243, C 246,247,250, C 253,301,303, C 305,311-314, C 317-320	CAP,CER,100PF,+-2%,100V,C0G	837609 837609 837609 837609 837609 837609 837609 837609 837609 837609	04222	SR151A101GAA	32	
C 103,145,148, C 201,207,210, C 213,214,235, C 245,249,260, C 265,266,272- C 274,302,304, C 306,403,404, C 406,412,421, C 422	CAP,POLYES,0.1UF,+-20%,50V	837526 837526 837526 837526 837526 837526 837526 837526 837526 837526	4U402	MKT1823 104 05 6	26	
C 107,124,147, C 157,215,242, C 254-256,259, C 269,270	CAP,CER,1000PF,+-20%,100V,X7R	837542 837542 837542 837542	04222	SR151C102MAA	12	
C 108,119,121- C 123	CAP,CER,5.6PF,+-0.25PF,100V,C0H	512954 512954	51406	RPE110C0H5R6C1	5	
C 109,110,118	CAP,CER,3.9PF,+-0.25PF,100V,C0J	512947	51406	RPE110C0J3R9C1	3	
C 111,236,237	CAP,CER,3.3PF,+-0.25PF,100V,C0J	519330	51406	RPE110C0J3R3C1	3	
C 112,113	CAP,CER,2.2PF,+-0.25PF,100V,C0G	362731	04222	SR15A2R2CAT	2	
C 114,244,248, C 263	CAP,CER,1.8PF,+-0.25PF,100V,C0K	512897 512897	51406	RPE110C0K1R8C1	4	
C 120,224,275	CAP,CER,2.7PF,+-0.25PF,100V,C0J	363705	51406	RPE110C0J279C1	3	
C 125,127,129, C 131,133,135, C 149	CAP,CER,0.01UF,+-20%,50V,X7R	816249 816249 816249	04222	SR075C103MAA	7	
C 126	CAP,AL,22UF,+-20%,16V,SOLV PROOF	614750	62643	SRAC16VB22RM5X7C3	1	
C 130,134	CAP,AL,15UF,+-20%,35V	614024	74840	RLR156RM050M	2	
C 139	CAP,CER,1200PF,+-20%,100V,X7R	358283	04222	SR201C122MAA	1	
C 140	CAP,CER,1800PF,+-5%,50V,C0G	528547	04222	SR215A182JAA	1	
C 142	CAP,CER,4700PF,+-20%,100V,X7R	362871	04222	SR151C472MAA	1	
C 146	CAP,CER,220PF,+-2%,100V,C0G	812131	04222	SR291A221GAA	1	
C 155,156,307- C 310,321,416	CAP,CER,100PF,+-2%,100V,C0G	512848 512848	04222	SR151A101GAA	8	
C 202-204,206, C 208,211,261, C 264,271,276	CAP,AL,2.2UF,+-20%,50V,SOLV PROOF	641480 641480 641480	62643	SRAC50VB2R2M4X7C3	10	
C 205	CAP,CER,39PF,+-2%,100V,C0G	512962	04222	SR151A390GAA	1	
C 209,212,230	CAP,CER,27PF,+-2%,100V,C0G	362749	04222	SR151A270GAA	3	
C 216,218,220, C 223	CAP,CER,8.2PF,+-0.25PF,100V,C0H	715359 715359	51406	RPE110C0H8R2C1	4	
C 217	CAP,CER,18PF,+-2%,100V,C0G	512335	51406	RPE110A184G1	1	
C 219,226-229, C 277	CAP,CER,4.7PF,+-0.25PF,100V,C0H	362772 362772	51406	RPE110C0H4R7C1	6	
C 221	CAP,CER,10PF,+-2%,100V,C0G	512343	51406	RPE110A100G1	1	
C 222	CAP,CER,12PF,+-2%,100V,C0G	816124	04222	SR291A120GAA	1	
C 225,252	CAP,CER,6.8PF,+-0.25PF,100V,C0H	512327	51406	RPE110C0H6R8C1	2	
C 251,405	CAP,CER,47PF,+-2%,100V,C0G	512368	04222	SR151A470GAA	2	
C 262	CAP,TA,3.3UF,+-20%,50V	772848	56289	195D335X0050Z2B	1	
C 267,411	CAP,TA,2.2UF,+-20%,35V	485185	56289	199D225X0035BA2	2	
C 322,409	CAP,TA,0.47UF,+-20%,35V	161349	56289	199D474X0035AA2	2	
C 401,402	CAP,AL,47UF,+5 -20%,16V	436006	62643	SM16VB-47	2	
C 407,408	CAP,POLYPR,0.0786UF,+-1%,50V	422998	84411	JF-86.07861%50V	2	
C 410	CAP,TA,4.7UF,+-20%,25V	161943	56289	199D475X0025BA2	1	
C 420	CAP,CER,1.0PF,+-0.25PF,100V,C0K	512145	51406	RPE110C0K105C1	1	

Table 5-6. A2A4 Output PCA (cont)

REFERENCE DESIGNATOR		DESCRIPTION	FLUKE STOCK NO	MFRS SPLY CODE	MANUFACTURERS PART NUMBER OR GENERIC TYPE	TOT QTY	NOTES
CR 101,105,111- CR 116,118,120, CR 203,210	ϟ ϟ ϟ	DIODE,SI,PIN,SMALL SIGNAL,UHF & VHF	402776 402776 402776	28480	5082-3379 T-25	12	
CR 102-104,106- CR 110,129,204- CR 209	ϟ ϟ ϟ	DIODE,SI,PIN, RF ATTENUATING	508077 508077 508077	96341	MA 4P523	15	
CR 117,119	ϟ	DIODE,SI,PIN,RF CUR CONT RESIST DIODE	742296	28480	QPND-4348	2	
CR 123,124	ϟ	DIODE,SI,BV=50V,IO=150MA,SELECTED VF	234468	27014	1M916B	2	
CR 126	ϟ	DIODE,SI,SCHOTTKY,MATCHED SET OF 2	722470	28480	QSCH3842	1	
CR 127,128	ϟ	DIODE,SI,SCHOTTKY BARRIER,SMALL SIGNL	535195	28480	5082-2800	2	
CR 130,201	ϟ	DIODE,SI,BV=75V,IO=150MA,500MW	203323	09214	IN4448	2	
CR 401,402	ϟ	DIODE,SI,SCHOTTKY BARRIER,SMALL SIGNL	313247	28480	5082-6264 T25	2	
J 104		HEADER,1 ROW,.100CTR,4 PIN	417329	00779	103747-4	1	
L 102,106,108, L 110,115,230		CHOKE,6TURN	320911 320911	89536	320911	6	
L 103-105,225		INDUCTOR,0.68UH,+-10%,221MHZ,SHLD	320937	24759	MR-0.68J&K	4	
L 113,116,209, L 210,214-218, L 220,224,227		INDUCTOR,10 TURNS	463448 463448 463448	89536	463448	12	
L 117		CORE,TOROID,FERRITE,.047X.138X.118	321182	0LUA3	56-590-65-4B	1	
L 201-203		INDUCTOR,6800UH,+-10%,1.5MHZ,SHLD	363184	24759	MR-6800J	3	
L 205		INDUCTOR,470UH,+-5%,6.5MHZ,SHLD	147827	24759	MR-470J	1	
L 221		INDUCTOR,1500UH,+-10%,2.5MHZ,SHLD	343863	24759	MR-1500K	1	
L 228		INDUCTOR,3900UH,+-10%,1.8MHZ,SHLD	363176	24759	MR-3900J&K	1	
MP 1		SHIELD, HET	774190	89536	774190	1	
MP 102,107,108		PIN TEST BASE	698472	20584	698472	3	
MP 229		GROUND STRIP,BECU,SPRING FINGER	756445	34641	97-500-08	1	
P 101,113-130		SOCKET,SINGLE,PWB,FOR .042-.049 PIN	544056	00779	50871-1	19	
P 104		HEADER,1 ROW,.100CTR,10 PIN	478693	00779	103747-0	1	
P 106		SOCKET,SINGLE,PWB,FOR 0.012-0.022 PIN	376418	22526	75060-012	1	
Q 101,102,202	ϟ	TRANSISTOR,SI,NPN,HI-FREQ,SMALL SIGNL	535013	04713	BFR91	3	
Q 103,302,304, Q 306	ϟ ϟ	TRANSISTOR,SI,NPN,SMALL SIGNAL	330803 330803	04713	MPS6560	4	
Q 104,201,203, Q 205,208,210, Q 212,214	ϟ ϟ ϟ	TRANSISTOR,SI,PNP,SMALL SIGNAL	195974 195974 195974	04713	2N3906	8	
Q 105,106	ϟ	TRANSISTOR,SI,NPN,SMALL SIGNAL,TO-92	218396	04713	2N3904	2	
Q 204,206,209, Q 211	ϟ ϟ	TRANSISTOR,SI,NPN,HI-FREQ,SMALL SIGNL	723379 723379	61636	BFR96S	4	
Q 207	ϟ	TRANSISTOR,SI,NPN,SMALL SIG,MICROWAVE	483172	33297	NE73435	1	
Q 213,215	ϟ	TRANSISTOR,SI,NPN,HI-FREQ,SMALL SIGNL	722256	04713	MRF581	2	
Q 301,303,305, Q 307	ϟ ϟ	TRANSISTOR,SI,PNP,SMALL SIGNAL	418707 418707	07263	MPS6562	4	
Q 401,403	ϟ	TRANSISTOR,SI,N-JFET,TO-92,SWITCH	261578	17856	J2317	2	
Q 402	ϟ	TRANSISTOR,SI,N-JFET,TO-92	376475	27014	SF50072	1	
R 101,102,104, R 114-120,151, R 156,269-271, R 316-318,320		RES,CF,1K,+-5%,0.25W	343426 343426 343426 343426	59124	CF1/4 102J	19	
R 103,121,122		RES,MF,39.2,+-1%,0.25W,100PPM	799775	91637	CCF-50 39R2F	3	
R 105		RES,MF,82.5,+-1%,0.25,100PPM	799783	91637	CCF-50 82R5F	1	
R 106		RES,CF,470,+-5%,0.25W	343434	59124	CF1/4 471J	1	
R 107		RES,CF,200,+-5%,0.25W	441451	59124	CF1/4 201J	1	
R 108,124,125		RES,MF,2.15K,+-1%,0.125W,100PPM	293712	91637	CMF-55 2151F T-1	3	
R 109		RES,MF,511,+-1%,0.25W,100PPM	799684	91637	CCF-50 5110F	1	
R 110		RES,CC,270,+-5%,0.5W	159616	01121	EB2715	1	
R 111,112,159, R 243-245		RES,MF,51.1,+-1%,0.25W,100PPM	799650 799650	91637	CCF-50 51R1F	6	

Table 5-6. A2A4 Output PCA (cont)

REFERENCE DESIGNATOR	DESCRIPTION	FLUKE STOCK NO	MFRS SPLY CODE	MANUFACTURERS PART NUMBER OR GENERIC TYPE	TOT QTY	NOTES
R 113,210,211, R 215,216	RES,CF,18,+-5%,0.125W	740035 740035	59124	RDS21/8-180J	5	
R 123,238	RES,MF,2.67K,+-1%,0.125W,100PPM	289587	91637	CMF-55 2671F T-1	2	
R 126	RES,MF,1.65K,+-1%,0.125W,100PPM	293662	91637	CMF-55 1651F T-1	1	
R 127	RES,MF,665,+-1%,0.125W,100PPM	320028	91637	CMF-55 6650F T-1	1	
R 128,129	RES,MF,124K,+-1%,0.125W,100PPM	288407	91637	CMF-55 1243F T-1	2	
R 130	RES,MF,1.54K,+-1%,0.125W,100PPM	289066	91637	CMF-55 1541F T-1	1	
R 131	RES,MF,3.48K,+-1%,0.125W,100PPM	260687	91637	CMF-55 3481F T-1	1	
R 132	RES,MF,24.3K,+-1%,0.125W,100PPM	236745	91637	CMF-55 2432F T-1	1	
R 133	RES,MF,6.04K,+-1%,0.125W,100PPM	285189	91637	CMF-55 6041F T-1	1	
R 134	RES,MF,21.5K,+-1%,0.125W,100PPM	168278	91637	CMF-55 2152F T-1	1	
R 135,304,413, R 414	RES,MF,10K,+-1%,0.125W,100PPM	168260 168260	91637	CMF-55 1002F T-1	4	
R 136,266	RES,MF,2.55K,+-1%,0.125W,100PPM	325498	91637	CMF-55 2551F T-1	2	
R 137	RES,MF,499,+-1%,,0.125W,100PM	168211	91637	CMF-55 4990F T-1	1	
R 138	RES,MF,16.9K,+-1%,0.125W,100PPM	267146	91637	CMF-55 1692F T-1	1	
R 139	RES,MF,34.8K,+-1%,0.125W,100PPM	261487	91637	CMF-55 3482F T-1	1	
R 140,148,149	RES,MF,1K,+-1%,0.125W,100PPM	168229	91637	CMF-55 1001F T-1	3	
R 141	RES,MF,37.4K,+-1%,0.125W,100PPM	226241	91637	CMF-55 3742F T-1	1	
R 142	RES,MF,100K,+-1%,0.125W,100PPM	248807	91637	CMF-55 1003F T-1	1	
R 143,147	RES,MF,20K,+-1%,0.125W,100PPM	291872	91637	CMF-55 2002F T-1	2	
R 144	RES,VAR,CERM,2K,+-10%,0.5W	309666	80294	3386R-1-202	1	
R 145	RES,MF,66.5K,+-1%,0.125W,100PPM	289082	91637	CMF-55 6652F T-1	1	
R 146,422	RES,MF,49.9K,+-1%,0.125W,100PPM	268821	91637	CMF-55 4992F T-1	2	
R 150,233,242	RES,MF,182,+-1%,0.25W,100PPM	799726	91637	CCF-50 1820F	3	
R 152	RES,CF,270,+-5%,0.25W	348789	59124	CF1/4 271J	1	
R 153,158,314, R 319	RES,CF,4.7K,+-5%,0.25W	348821 348821	59124	CF1/4 472J	4	
R 154	RES,MF,22.1,+-1%,0.25W,100PPM	799882	91637	CCF-50 22R1F	1	
R 155	RES,CF,1,+-5%,0.25W	357665	59124	CF1/4 1R0J	1	
R 157,272	RES,MF,1K,+-1%,0.25W,100PPM	799791	91637	CCF-50 1001F	2	
R 201,207,213, R 232,240,248, R 265	RES,CF,2K,+-5%,0.25W	441469 441469 441469	59124	CF1/4 202J	7	
R 202	RES,CF,360,+-5%,0.25W	352286	59124	CF1/4 361J	1	
R 203,209,214	RES,MF,287,+-1%,0.125W,100PPM	443002	91637	CMF-55 2870F T-1	3	
R 204,205	RES,CF,15,+-5%,0.125W	740027	59124	RDS21/8-150J	2	
R 206,212,217	RES,CF,11,+-5%,0.125W	740019	59124	RDS21/8-110J	3	
R 208,220,234, R 241	RES,CC,150,+-5%,0.5W	186056 186056	01121	EB1515	4	
R 218,239	RES,MF,6.65K,+-1%,0.125W,100PPM	294918	91637	CMF-55 6651F T-1	2	
R 219,301	RES,MF,8.45K,+-1%,0.125W,100PPM	221671	91637	CMF-55 8451F T-1	2	
R 221	RES,MF,1.21K,+-1%,0.125W,100PPM	229146	91637	CMF-55 1211F T-1	1	
R 222	RES,MF,5.36K,+-1%,0.125W,100PPM	370981	91637	CMF-55 5361F T-1	1	
R 223	RES,CC,300,+-5%,0.5W	108829	01121	EB3015	1	
R 225,229,423, R 425	RES,CF,75,+-5%,0.125W	740068 740068	59124	RDS21/8-750J	4	
R 227	RES,VAR,CERM,100,+-10%,0.5W	275735	80294	3386R-1-101	1	
R 228,424	RES,CF,110,+-5%,0.125W	740076	59124	RDS21/8-111J	2	
R 230,231	RES,MF,100,+-1%,0.25W,100PPM	799668	91637	CCF-50 1000F	2	
R 235	RES,MF,47.5,+-1%,0.25W,100PPM	799700	91637	CCF-50 47R5F	1	
R 236,237	RES,MF,30.1,+-1%,0.25W,100PPM	799692	91637	CCF-50 30R1F	2	
R 246	RES,MF,5.76K,+-1%,0.125W,100PPM	260349	91637	CMF-55 5761F T-1	1	
R 249	RES,MF,63.4,+-1%,0.5W,100PPM	155101	91637	CMF-65 63R4F T-1	1	
R 250	RES,MF,162,+-1%,0.25W,100PPM	799890	91637	CCF-50 1620F	1	

Table 5-6. A2A4 Output PCA (cont)

REFERENCE DESIGNATOR		DESCRIPTION	FLUKE STOCK NO	MFRS SPLY CODE	MANUFACTURERS PART NUMBER OR GENERIC TYPE	TOT QTY	NOTES
R 251,252		RES,MF,24.3,+-1%,0.25W,100PPM	799874	91637	CCF-50 24R3F	2	
R 253		RES,MF,110,+-1%,0.25W,100PPM	799809	91637	CCF-50 1100F	1	
R 254		RES,MF,221,+-1%,0.25W,100PPM	799908	91637	CCF-50 2210F	1	
R 255		RES,MF,301,+-1%,0.25W,100PPM	799916	91637	CCF-50 3010F	1	
R 256		RES,CF,120,+-5%,0.125W	740084	59124	RDS21/8-121J	1	
R 257		RES,CC,15,+-10%,0.125W	261800	01121	BB1531	1	
R 258		RES,CF,1.2K,+-5%,0.25W	441378	59124	CF1/4 122J	1	
R 259		RES,CC,390,+-5%,0.5W	109082	01121	EB3915	1	
R 261		RES,CC,330,+-5%,0.5W	108936	01121	EB3315	1	
R 262		RES,CF,160,+-5%,0.125W	740092	59124	RDS21/8-161J	1	
R 263,264		RES,CF,24,+-5%,0.125W	740043	59124	RDS21/8-240J	2	
R 267		RES,MF,732,+-1%,0.125W,100PPM	294884	91637	CMF-55 7320F T-1	1	
R 268		RES,MF,31.6,+-1%,0.5W,100PPM	772152	91637	CMF65 31R6 F T-1	1	
R 302		RES,MF,3.4K,+-1%,0.125W,100PPM	260323	91637	CMF-55 3401F T-1	1	
R 303		RES,MF,715,+-1%,0.125W,100PPM	313080	91637	CMF-55 7150F T-1	1	
R 305		RES,MF,392,+-1%,0.125W,100PPM	260299	91637	CMF-55 3920F T-1	1	
R 306		RES,MF,39.2K,+-1%,0.125W,100PPM	236414	91637	CMF-55 3922F T-1	1	
R 307		RES,CF,47,+-5%,0.25W	441592	59124	CF1/4 470J	1	
R 308		RES,CF,56K,+-5%,0.25W	441626	59124	CF1/4 563J	1	
R 309		RES,VAR,CERM,10K,+-10%,0.5W	309674	80294	3386R-1-103	1	
R 310		RES,MF,523,+-1%,0.125W,100PPM	294835	91637	CMF-55 5230F T-1	1	
R 311		RES,VAR,CERM,200,+-10%,0.5W	275743	80294	3386R-1-201	1	
R 312		RES,MF,294,+-1%,0.125W,100PPM	288472	91637	CMF-55 2940F T-1	1	
R 313		RES,CF,33K,+-5%,0.25W	348888	59124	CF1/4 333J	1	
R 315		RES,CF,620,+-5%,0.25W	442319	59124	CF1/4 621J	1	
R 324		RES,CF,62K,+-5%,0.25W	348904	59124	CF1/4 623J	1	
R 401		RES,MF,681,+-1%,0.125W,100PPM	543785	91637	CMF-55 6810F T-1	1	
R 402		RES,CF,1M,+-5%,0.25W	348987	59124	CF1/4 105J	1	
R 403,408		RES,MF,3.32K,+-1%,0.125W,100PPM	312652	91637	CMF-55 3321F T-1	2	
R 404,407		RES,MF,34.8,+-1%,0.125W,100PPM	343897	91637	CMF-55 8060F T-1	2	
R 405,409		RES,MF,4.99K,+-1%,0.125W,100PPM	168252	91637	CMF-55 4991F T-1	2	
R 406,410		RES,MF,71.5,+-1%,0.125W,100PPM	393603	91637	CMF-55 71R5F T-1	2	
R 411		RES,MF,4.02K,+-1%,0.125W,100PPM	235325	91637	CMF-55 4021F T-1	1	
R 412		RES,MF,1.69K,+-1%,0.125W,100PPM	321414	91637	CMF-55 1691F T-1	1	
R 415		RES,MF,6.34K,+-1%,0.125W,100PPM	267344	91637	CMF-55 6341F T-1	1	
R 416		RES,MF,147K,+-1%,0.125W,100PPM	291344	91637	CMF-55 1473F T-1	1	
R 417		RES,MF,23.2K,+-1%,0.125W,100PPM	291351	91637	CMF-55 2322F T-1	1	
R 418		RES,MF,301K,+-1%,0.125W,100PPM	289488	91637	CMF-55 3013F T-1	1	
R 419		RES,VAR,CERM,100K,+-10%,0.5W	369520	32997	3386R-1-104	1	
R 420		RES,CF,4.3K,+-5%,0.25W	441576	59124	CF1/4 433J	1	
R 421		RES,VAR,CERM,20K,+-10%,0.5W	335760	80294	3386R-1-203	1	
R 426,427		RES,CF,56,+-5%,0.25W	342618	59124	CF1/4 560J	2	
RT 301		THERMISTOR,DISC,NEG.,10K,+-10%,25C	104596	50273	140-103LAG-A01	1	
TP 1- 5		PIN,SINGLE,PWB,0.025 SQ	267500	00779	87623-1	13	
TP 6, 7, 11		TERM,FASTON,TAB,.110,SOLDER	512889	00779	62395-1	3	
U 101,402	ϟ	IC,OP AMP,DUAL,JFET INPUT,8 PIN DIP	495192	27014	LF353N	2	
U 201		MIXER,DOUBLE BALANCED,1 - 1000 MHZ	525493	15542	TFM-2-8	1	
U 301	ϟ	IC,CMOS,DUAL 8 BIT DAC,CURRENT OUTPUT	722272	24355	AD7528JN	1	
U 302,405	ϟ	IC,OP AMP,QUAD JFET INPUT,14 PIN DIP	659748	01295	TL074CN	2	
U 303	ϟ	CMOS 7541AJ TESTED	802298	89536	802298	1	
U 304,305,308, U 404	ϟ ϟ	IC,LSTTL,OCTAL D F/F,+EDG TRG,W/CLEAR	454892 454892	01295	SN74LS273N	4	
U 306	ϟ	IC,LSTTL,QUAD 2 INPUT NAND GATE	393033	01295	SN74LS00N	1	

Table 5-6. A2A4 Output PCA (cont)

REFERENCE DESIGNATOR	DESCRIPTION	FLUKE STOCK NO	MFRS SPLY CODE	MANUFACTURERS PART NUMBER OR GENERIC TYPE	TOT QTY	NOTES
U 307	ϟ IC,LSTTL,3-8 LINE DCDR W/ENABLE	407585	27014	DM74LS138N	1	
U 309,310	ϟ IC,COMPARATOR,QUAD,14 PIN DIP	387233	27014	LM339N	2	
U 311	ϟ IC,OP AMP,QUAD,LOW POWER	741397	27014	LF444CN	1	
U 401	ϟ IC,CMOS,QUAD BILATERAL SWITCH	408062	04713	MC14066BCP	1	
U 403	ϟ IC,CMOS,10BIT DAC,10BIT ACCUR,CUR OUT	802280	24355	AD7533LN	1	
VR 121,301	ϟ ZENER,UNCOMP,5.1V,5%,20.0MA,0.4W	159798	04713	1N751	2	
VR 125	ϟ ZENER,UNCOMP,4.3V,5%,20.0MA,0.4W	180455	14552	1N749	1	
VR 302	ϟ ZENER,UNCOMP,15.0V,5%,8.5MA,0.4W	266601	04713	1N965	1	
VR 403	ϟ ZENER,COMP,6.3V,2%,50PPM,7.5MA	172148	04713	CZG20121RL	1	
W 1	CABLE ASSY, RF JUMPER	716993	89536	716993	1	
Z 301	RES,CERM,SIP,8 PIN,7 RES,10K,+-2%	412924	91637	CSC08A-01-103G	1	
Z 401	RES,CERM,DIP,16 PIN,8 RES,10K,1%	501841	80294	4116R-001-103-F	1	

NOTES:

ϟ Static sensitive part.
THE FOLLOWING COMPONENTS ARE NON-FIELD REPLACEABLE:
C2 02-206,208,209,211,212,216-222,224,225,252,254,263,264,271,277
CR 126,202-210
L2 17,220
Q2 02,204,206,215
R2 03-206,209-212,214-217,224-228,253-256,262-264
U2 01

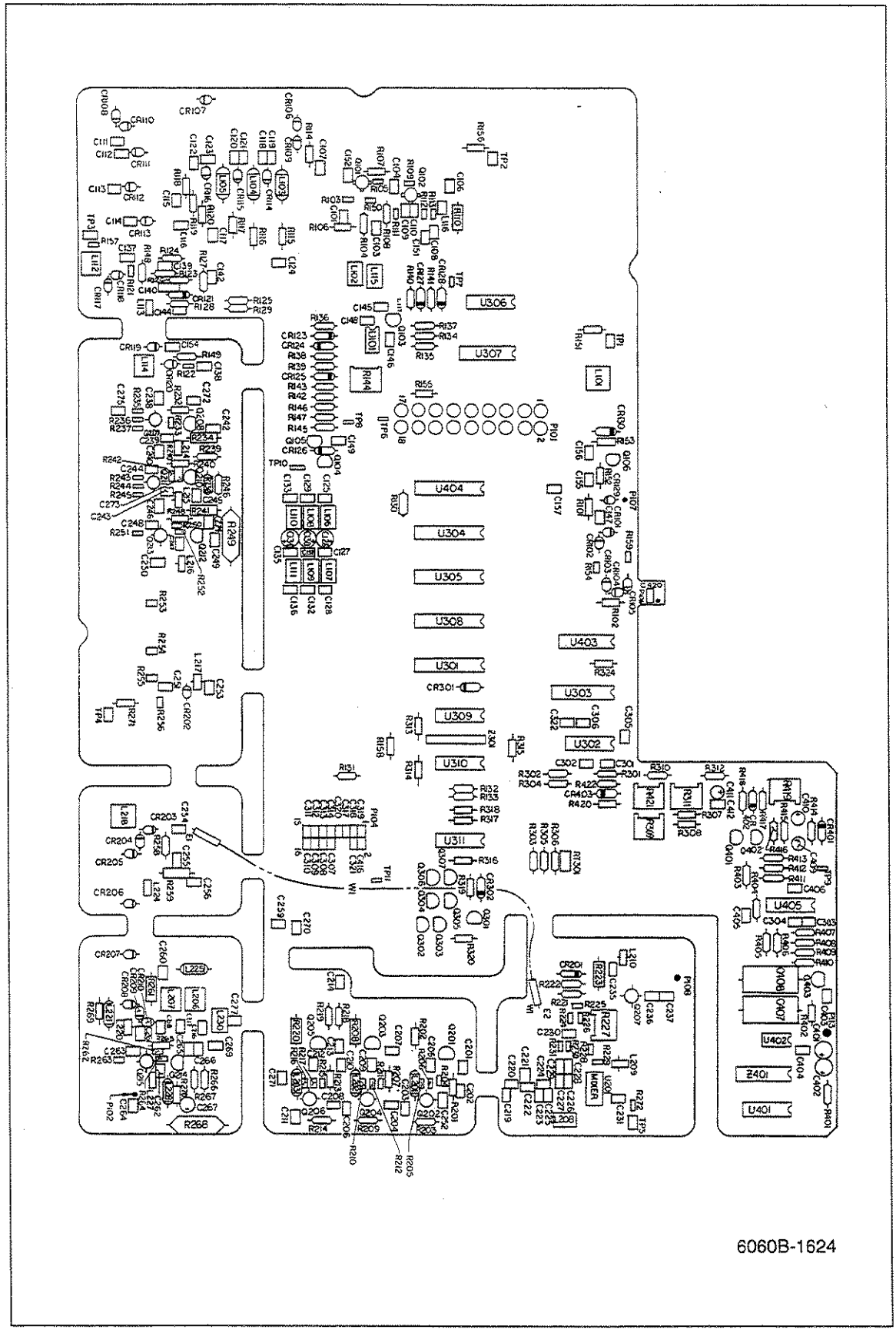

Figure 5-6. A2A4 Output PCA

Table 5-7. A2A5 Attenuator/RPP Assembly

REFERENCE DESIGNATOR	DESCRIPTION	FLUKE STOCK NO	MFRS SPLY CODE	MANUFACTURERS PART NUMBER OR GENERIC TYPE	TOT QTY	NOTES
A 4	ϟ ATTENUATOR/RPP PCA (RELAY)	752659	89536	752659	1	
A 5	ϟ RELAY DRIVER/RPP PCA	752683	89536	752683	1	
H 35- 41	SCREW,PH,P,LOCK,SS,6-32,.625	412841	74594	412841	7	
MP 1	ϟ ASSEMBLY, ATTENUATOR MODULE FILTER	848080	89536	848080	1	
U 1	IC,2K X 8,EPROM	454603	50088	ET2716Q	1	
NOTES:	ϟ Static sensitive part. FOR MODULE EXCHANGE, ORDER PART NUMBER 752667 (INCLUDES CALIBRATED EPROM)					

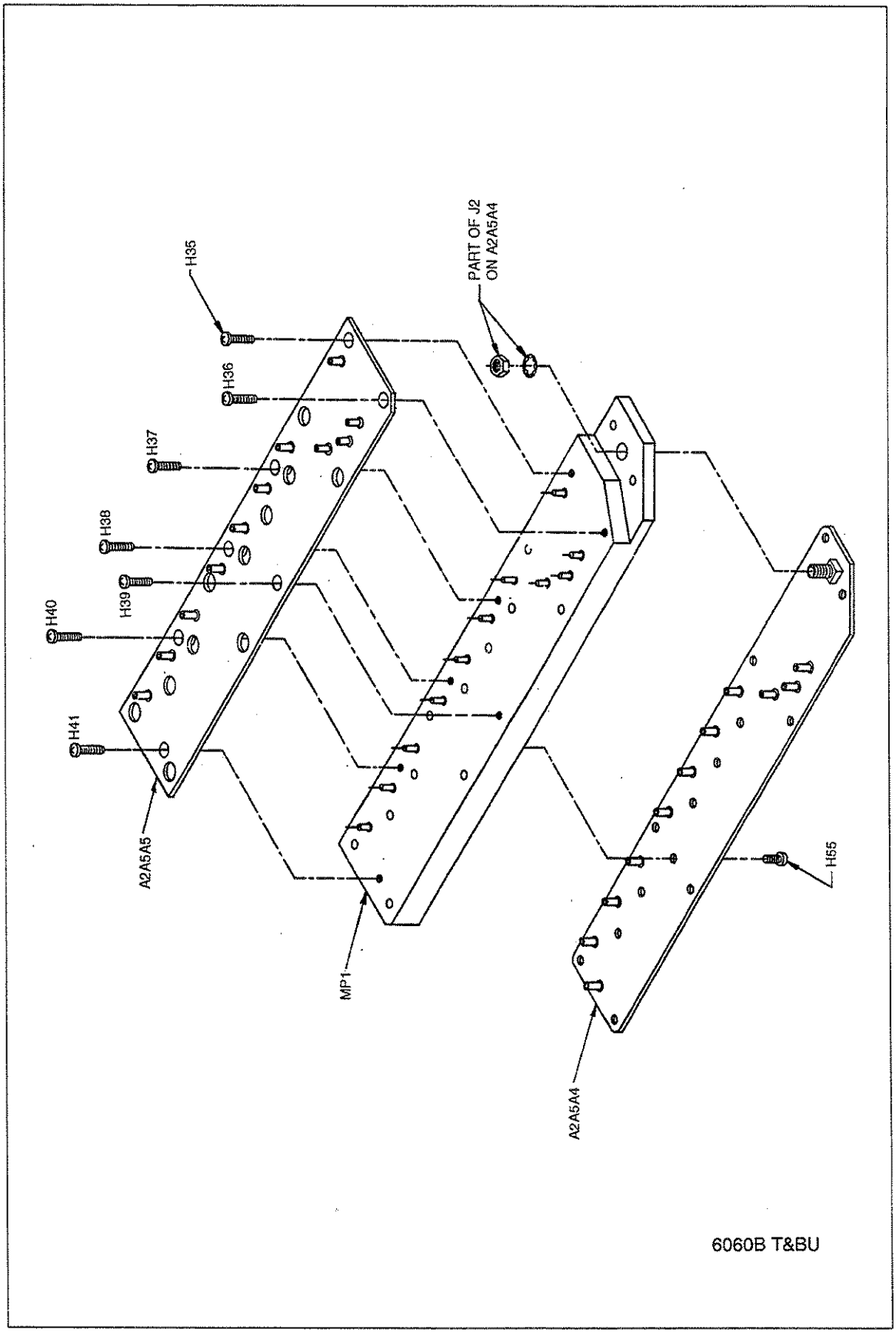

Figure 5-7. A2A5 Attenuator/RPP Assembly

Table 5-8. A2A5A4 Attenuator/RPP PCA

REFERENCE DESIGNATOR		DESCRIPTION	FLUKE STOCK NO	MFRS SPLY CODE	MANUFACTURERS PART NUMBER OR GENERIC TYPE	TOT QTY	NOTES
C 1, 2, 4		CAP,CER,1000PF,+-20%,50V,X7R,0805	514059	04222	08055C102MAT060R	3	
C 3, 5		CAP,TA,4.7UF,+-10%,35V,7343	519363	56289	293D475X9035D2T or W	2	
C 6, 7		CAP,TA,3.3UF,+-20%,50V	772848	56289	195D335X0050Z2B	2	
CR 1	ϟ	DIODE,SI,SCHOTTKY BARRIER,SMALL SIGNL	535195	28480	5082-2800	1	
CR 2- 9	ϟ	DIODE,SI,BV= 70.0V,500 MW	454181	65940	1N4606	8	
H 1- 8		RELAY WASHER	803247	89536	803247	8	
J 1		SOCKET,SINGLE,PWB,FOR 0.034-0.037 PIN	732826	00779	2-332070-7	1	
J 2		CONN,COAX,SMA(M),PWB OR PANEL	512087	21845	2985-6011	1	
K 1- 8		RELAY, SCREENED, HIGH FREQUENCY	812669	89536	812669	8	
P 1- 11		SOCKET,SINGLE,PWB,FOR .042-.049 PIN	544056	00779	50871-1	11	
R 1, 7, 10, R 16, 19		RES,MF,402,+-0.5%,0.125W,50PPM	461632 461632	64537	PME60A5AP04	5	
R 2, 3, 8, R 9, 11, 12, R 17, 18, 20, R 21		RES,MF,56.9,+-0.5%,0.125W,50PPM	461590 461590 461590 461590	64537	PME6056R90.5%T-2	10	
R 4		RES,MF,94.2,+-0.5%,0.125W,50PPM	461616	64537	PME60A3AP04	1	
R 5, 6		RES,MF,83.5,+-0.5%,0.125W,50PPM	461608	64537	PME6083R50.5%T-2	2	
R 13		RES,MF,37.4,+-0.5%,0.125W,50PPM	461079	64537	PME60A3AP04	1	
R 14, 15		RES,MF,150,+-0.5%,0.125W,50PPM	461624	64537	PME60A3AP04	2	
R 22		RES,MF,10K,+-1%,0.25W,100PPM	799635	91637	CCF-50 1002F	1	
NOTES:	ϟ	Static sensitive part. ALL COMPONENTS NON-FIELD REPLACEABLE					

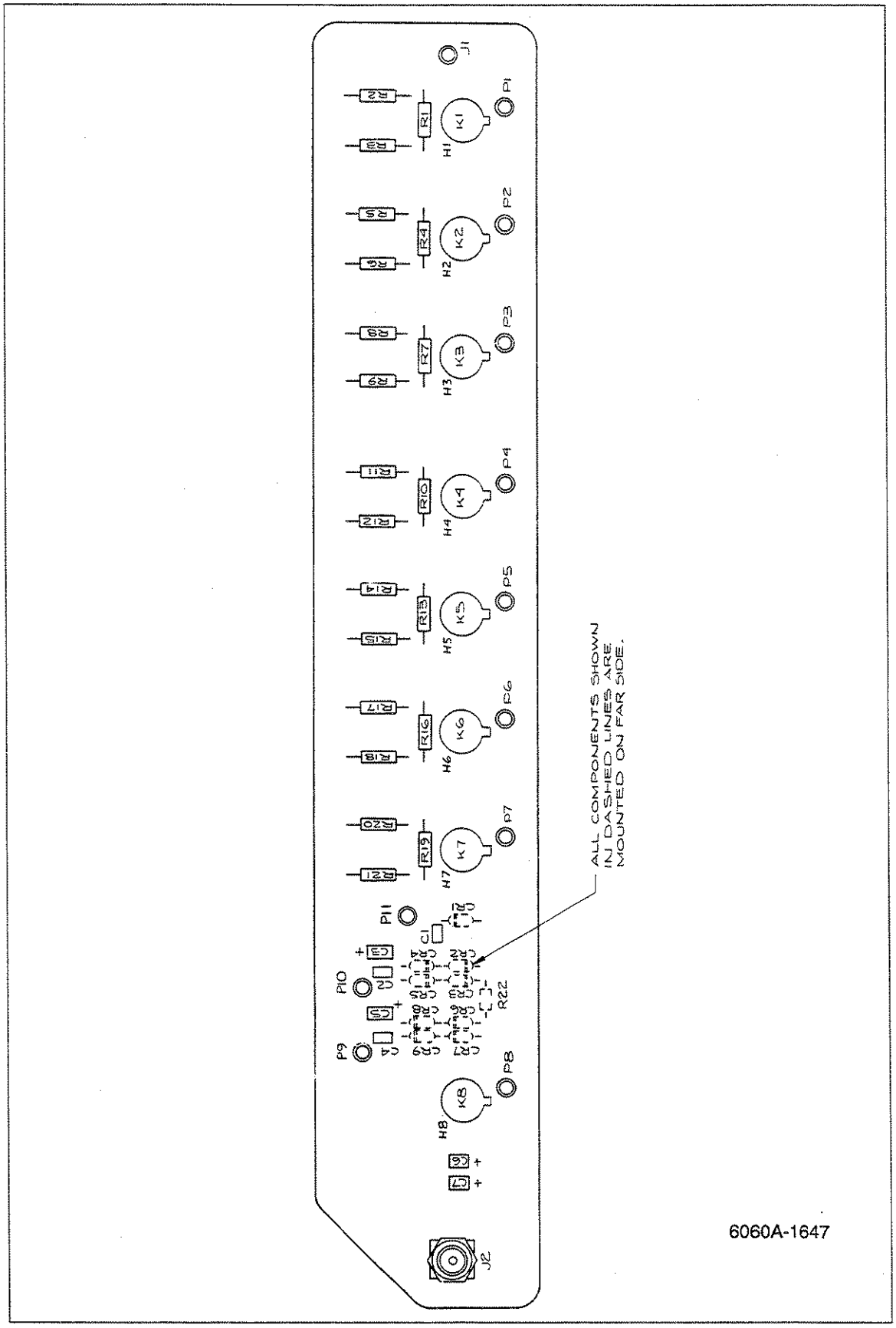

Figure 5-8. A2A5A4 Attenuator/RPP PCA

Table 5-9. A2A5A5 Relay Driver/RPP PCA

REFERENCE DESIGNATOR		DESCRIPTION	FLUKE STOCK NO	MFRS SPLY CODE	MANUFACTURERS PART NUMBER OR GENERIC TYPE	TOT QTY	NOTES
C 1- 7, 11		CAP,POLYES,0.1UF,+-20%,50V	837526	4U402	MKT1823 104 05 6	8	
C 8, 9, 12, C 13		CAP,CER,0.01UF,+-20%,100V,X7R	875489 875489	04222	SR151C103MAA	4	
C 10, 16		CAP,CER,0.22UF,+-20%,50V,Z5U	831982	04222	SR295E224MAA	2	
C 14		CAP,AL,22UF,+-20%,35V,SOLV PROOF	817056	62643	KMA35T220M6X7FT	1	
C 15		CAP,TA,4.7UF,+-20%,50V	832675	56289	199D475X0050DG2	1	
CR 11- 14, 16, CR 17	ϟ ϟ	DIODE,SI,BV= 75.0V,IO=150MA,500MW	698720 698720	65940	1N4448	6	
J 1		HEADER,1 ROW,.100CTR,15 PIN	758011	00779	1-641126-5	1	
L 1- 10		CHOKE,6TURN	320911	89536	320911	10	
L 11		INDUCTOR,82UH,+-10%,14MHZ,SHLD	542290	24759	MR-82J&K	1	
L 12, 13		INDUCTOR,47UH,+-5%,26.5MHZ,SHLD	147850	24759	MR-47J	2	
MP 1- 7		SPACER,SWAGE,.250 RND,BR,.150,.250	423855	55566	1533B.150B14	7	
P 1- 11		SOCKET,SINGLE,PWB,FOR .042-.049 PIN	544056	00779	50871-1	11	
Q 1- 7, 9	ϟ	TRANSISTOR,SI,PNP,T092	698290	04713	MPS6562	8	
Q 8	ϟ	TRANSISTOR,SI,NPN,SELECTED IEBO,TO-92	685404	27014	SX14073A,SX12398	1	
R 1, 4, 7, R 10, 13, 16, R 19, 38		RES,CF,510,+-5%,0.25W	573139 573139 573139	59124	CF1/4 511J	8	
R 2, 5, 8, R 11, 14, 17, R 20, 39, 41		RES,CF,4.7K,+-5%,0.25W	573311 573311 573311	59124	CF1/4 472J	9	
R 3, 6, 9, R 12, 15, 18, R 21, 40		RES,CF,1,+-5%,0.25W	572883 572883 572883	59124	CF1/4 1R0J	8	
R 22, 23, 29, R 35, 36, 42, R 45		RES,CF,1K,+-5%,0.25W	573170 573170 573170	59124	CF1/4 102J	7	
R 24		RES,CF,30K,+-5%,0.25W	574251	59124	CF1/4 303J	1	
R 25, 30, 31, R 37		RES,CF,10K,+-5%,0.25W	573394 573394	59124	CF1/4 103J	4	
R 27		RES,MF,1.07K,+-1%,0.125W,100PPM	344325	91637	CMF-55 1071F T-1	1	
R 28		RES,MF,422,+-1%,0.125W,100PPM	720235	91637	CMF-55 4220F T-1	1	
R 32		RES,MF,1.5K,+-1%,0.125W,100PPM	719682	91637	CMF-55 1501F T-1	1	
R 33		RES,CF,56,+-5%,0.25W	641068	59124	CF1/4 560J	1	
R 34		RES,CF,100K,+-5%,0.25W	573584	59124	CF1/4 104J	1	
R 43		RES,CF,13K,+-5%,0.25W	573410	59124	CF1/4 133J	1	
R 44		RES,CF,2K,+-5%,0.25W	573238	59124	CF1/4 202J	1	
R 46		RES,CF,470,+-5%,0.25W	573121	59124	CF1/4 471J	1	
R 47		RES,CF,12K,+-5%,0.25W	573402	59124	CF1/4 123J	1	
R 48		RES,CF,4.3K,+-5%,0.25W	641100	59124	CF1/4 432J	1	
TP 1		HEADER,1 ROW,.100CTR,6 PIN	478669	00779	103747-6	1	
U 1	ϟ	IC,OP AMP,QUAD,JFET INPUT,14 PIN DIP	483438	01295	TL084CN	1	
VR 1- 7, 15	ϟ	ZENER,UNCOMP,30.0V,10%,4.2MA,0.4W	272633	04713	1N972BJAN	8	
VR 8, 9, 18	ϟ	ZENER,UNCOMP,4.7V,5%,20.0MA,0.4W	524058	04713	1N750	3	
VR 10	ϟ	ZENER,COMP,6.4V,5%,1PPM,2MA	381988	04713	SZG20120	1	
NOTES:	ϟ	Static sensitive part.					

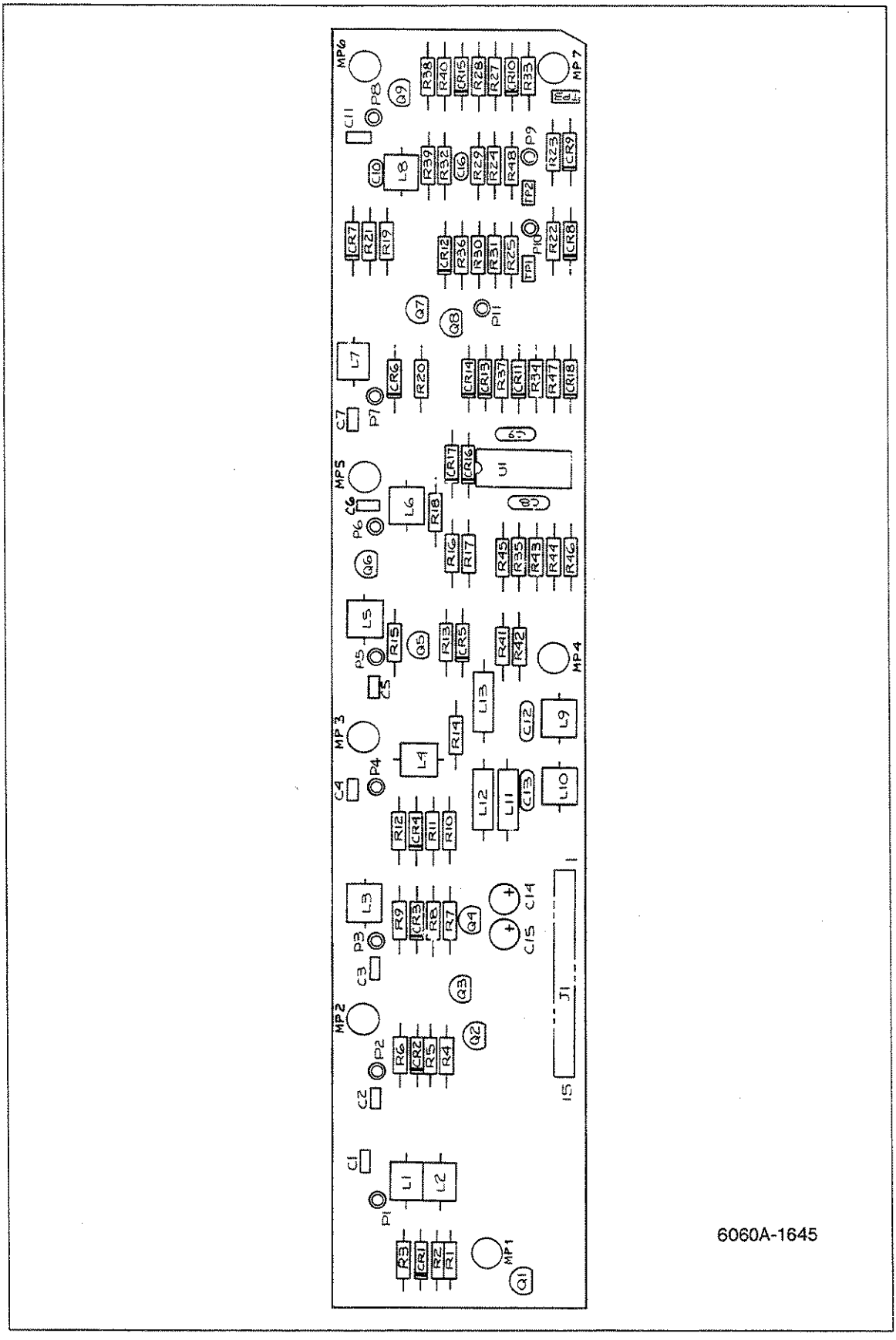

Figure 5-9. A2A5A5 Relay Driver/RPP PCA

Table 5-10. A2A7 Controller PCA

REFERENCE DESIGNATOR		DESCRIPTION	FLUKE STOCK NO	MFRS SPLY CODE	MANUFACTURERS PART NUMBER OR GENERIC TYPE	TOT QTY	NOTES
C 1		CAP,AL,47UF,+50-20%,16V	436006	62643	SM16VB-47	1	
C 2, 6, 7, C 10- 13, 16, C 18, 19, 21, C 23- 25, 28- C 31, 34, 35, C 39- 42, 44, C 45		CAP,POLYES,0.22UF,+-10%,50V	706028 706028 706028 706028 706028 706028 706028	68919	MKS1224K50B	26	
C 3		CAP,TA,0.47UF,+-20%,35V	161349	56289	199D474X0035AA2	1	
C 4, 5		CAP,TA,10UF,+-20%,20V	330662	56289	199D106X0020CA2	2	
C 22, 51, 53- C 57		CAP,CER,220PF,+-10%,1000V,Z5F	368605 368605	60705	562C0B0CK102EC221K	7	
C 50, 52, 58, C 59		CAP,CER,2000PF,+100-0%,1000V,Z5U	105569 105569	60705	562CZ5UCK102AE202P	4	
C 60		CAP,CER,100PF,+-10%,1000V,S3N	105593	60705	561CR3LCK102EF101K	1	
C 61		CAP,CER,56PF,+-2%,100V,COG	512970	04222	SR151A560GAA	1	
CR 1	ϟ	DIODE,SI,BV= 75.0V,IO=150MA,500MW	698720	65940	1N4448	1	
J 101,105,107- J 157		PIN,SINGLE,PWB,0.025 SQ	267500 267500	00779	87623-1	53	
J 102,103		SOCKET,1 ROW,PWB,0.100CTR,16 POS	447102	30035	SS-109-1-16	2	
J 106		HEADER,2 ROW,.100CTR,RT ANG,26 PIN	512590	00779	1-87230-3	1	
L 1, 2		CHOKE,6TURN	320911	89536	320911	2	
L 3		INDUCTOR,4.7UH,+-10%,7MHZ,SHLD	174722	24759	MR-4.70K	1	
P 101-118		SOCKET,SINGLE,PWB,FOR .042-.049 PIN	544056	00779	50871-1	18	
R 1, 6- 11		RES,CF,180,+-5%,0.25W	573048	59124	CF1/4 181J	7	
R 2, 13		RES,CF,4.7K,+-5%,0.25W	573311	59124	CF1/4 472J	2	
R 3		RES,CF,20K,+-5%,0.25W	573444	59124	CF1/4 203J	1	
R 4		RES,CF,390K,+-5%,0.25W	573667	59124	CF1/4 394J	1	
R 5		RES,CF,100K,+-5%,0.25W	573584	59124	CF1/4 104J	1	
R 12		RES,CF,100,+-5%,0.25W	573014	59124	CF1/4 101J	1	
R 14, 15		RES,CF,1.3K,+-5%,0.25W	573204	59124	CF1/4 132J	2	
S 1		SWITCH,MODULE,SPST,DIP,SEALED,6 POS	831909	00779	5-435166-1	1	
U 1	ϟ	IC,NMOS,16 BIT MICROCOMPUTER	640417	01295	MP9572N	1	
U 2	ϟ	IC,LSTTL,HEX BUFFER W/NOR ENABLE	483800	27014	DM74LS367AN	1	
U 3, 4, 18	ϟ	IC,LSTTL,OCTL BUS TRNSCVR W/3-ST OUT	477406	01295	SN74LS245N	3	
U 5	ϟ	IC,LSTTL,HEX INVERTER	393058	01295	SN74LS04N	1	
U 7	ϟ	IC,COMPARATOR,DUAL,LO-PWR,8 PIN DIP	478354	27014	LM393N	1	
U 8	ϟ	IC,LSTTL,TRIPLE 3 INPUT NAND GATE	393074	27014	DM74LS10N	1	
U 9	ϟ	IC,LSTTL,HEX D F/F,+EDG TRG,W/CLEAR	393207	01295	SN74LS174N	1	
U 10	ϟ	IC,STTL,QUAD 2 INPUT OR GATE	604629	01295	SN74S32N	1	
U 11, 40	ϟ	IC,LSTTL,OCTAL D TRANSPARENT LATCHES	504514	27014	DM74LS273N	2	
U 14	ϟ	IC,LSTTL,2-4 LINE DEMUX	393165	01295	SN74LS139AN	1	
U 15, 16, 33, U 34	ϟ ϟ	IC,LSTTL,OCTL LINE DRVR W/3-STATE OUT	429035 429035	01295	SN74LS244N	4	
U 17, 27	ϟ	IC,LSTTL,OCTAL D F/F,+EDG TRG,W/CLEAR	454892	01295	SN74LS273N	2	
U 20, 35, 36, U 38	ϟ ϟ	IC,LSTTL,3-8 LINE DCDR W/ENABLE	407585 407585	27014	DM74LS138N	4	
U 21		6061A PROGRAMMED EPROM, 27256	808626	89536	808626	1	
U 22		6061A PROGRAMMED EPROM, 27128	808618	89536	808618	1	
U 21		6060B PROGRAMMED EPROM, 27256	792762	89536	792762	1	
U 22		6060B PROGRAMMED EPROM, 27128	792754	89536	792754	1	
U 23, 24, 26		IC,2K X 8,EPROM	454603	50088	ET2716Q	3	
U 25	ϟ	IC, 2K X 8 STAT RAM	584144	49569	IDT6116SA-45P	1	
U 30, 31	ϟ	IC,ARRAY,7 TRANS,NPN,DARLINGTON PAIRS	454116	01295	ULN2003AN	2	
U 37	ϟ	IC,LSTTL,QUAD 2 INPUT OR GATE	393108	01295	SN74LS32N	1	
U 41		CRYSTAL,10MHZ,+-0.01%,HC-18/U	520239	89536	520239	1	

Table 5-10. A2A7 Controller PCA (cont)

REFERENCE DESIGNATOR	DESCRIPTION	FLUKE STOCK NO	MFRS SPLY CODE	MANUFACTURERS PART NUMBER OR GENERIC TYPE	TOT QTY	NOTES
U 42	ϟ IC,LSTTL,DUAL JK F/F,-EDG TRIG	414029	01295	SN74LS112N	1	
U 44	ϟ IC,LSTTL,HEX INVERTER W/SCHMT TRIG	483180	27014	DM74LS14N	1	
XU 21, 22	SOCKET,IC,28 PIN	448217	91506	228-AG39D	2	
XU 23, 24, 26	SOCKET,IC,24 PIN	376236	00779	2-640361-1	3	
Z 1	RES,CERM,SIP,10 PIN,9 RES,4.7K,+-2%	484063	91637	CSC10A-01-472G	1	
Z 2- 5	RES,CERM,SIP,10 PIN,9 RES,10K,+-2%	414003	91637	CSC10A-01-103G	4	
NOTES:	ϟ Static sensitive part.					

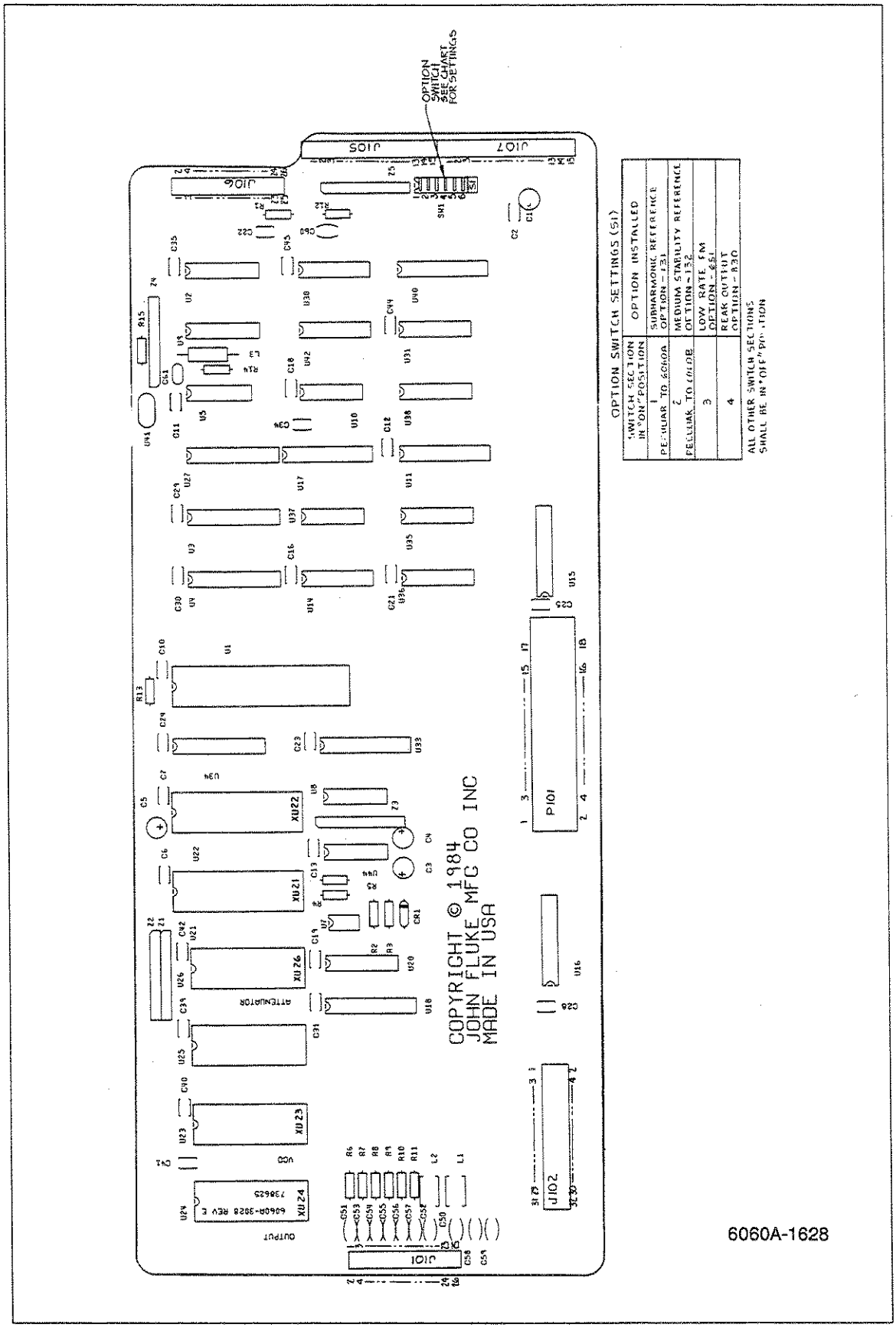

Figure 5-10. A2A7 Controller PCA

Table 5-11. A2A8 Non-Volatile Memory PCA

REFERENCE DESIGNATOR		DESCRIPTION	FLUKE STOCK NO	MFRS SPLY CODE	MANUFACTURERS PART NUMBER OR GENERIC TYPE	TOT QTY	NOTES
B 1		BATTERY,LITHIUM,3.7V,0.85AH	658476	68630	15-51-01-410-000	1	
C 1		CAP,TA,10UF,+-20%,20V	330662	56289	199D106X0020CA2	1	
C 2- 6		CAP,POLYES,0.22UF,+-10%,50V	706028	68919	MKS1224K50B	5	
CR 1, 2	ϟ	DIODE,SI,BV=75V,IO=150MA,500MW	203323	09214	IN4448	2	
CR 3	ϟ	ZENER,UNCOMP,3.3V,10%,20.0MA,0.4W	309799	04713	1N746	1	
H 1		COMPONENT HOLDER	422865	98159	2829-75-2	1	
P 1		PIN,SINGLE,PWB,0.025 SQ	267500	00779	87623-1	32	
Q 1	ϟ	TRANSISTOR,SI,PNP,SMALL SIG,SELECTED	380394	04713	MPS404A	1	
Q 2, 3	ϟ	TRANSISTOR,SI,NPN,SMALL SIGNAL,TO-92	218396	04713	2N3904	2	
Q 4	ϟ	TRANSISTOR,SI,N-DMOS FET,TO-72	477729	15818	SD213DE/R	1	
R 1		RES,MF,432,+-1%,0.125W,100PPM	326397	91637	CMF-55 4320F T-1	1	
R 2		RES,MF,33.2,+-1%,0.125W,100PPM	296681	91637	CMF-55 33R2F T-1	1	
R 3		RES,MF,100,+-1%,0.125W,100PPM	168195	91637	CMF-55 1000F T-1	1	
R 4		RES,MF,562,+-1%,0.125W,100PPM	340828	91637	CMF-55 5620F T-1	1	
R 5		RES,CF,100K,+-5%,0.25W	348920	59124	CF1/4 104J	1	
U 1	ϟ	IC, 2K X 8 STAT RAM	647222	61772	IDT611SA150P	1	
U 2	ϟ	IC,LSTTL,OCTL BUS TRNSCVR W/3-ST OUT	477406	01295	SN74LS245N	1	
U 3	ϟ	IC,LSTTL,OCTL LINE DRVR W/3-STATE OUT	429035	01295	SN74LS244N	1	
U 4	ϟ	IC,LSTTL,QUAD BUS BFR W/3-STATE OUT	472746	27014	DM74LS125AN	1	
U 5	ϟ	IC,TTL,TRIPLE 3 INPUT NAND GATE	363465	27014	DM7412N	1	
U 6	ϟ	IC,LSTTL,HEX INVERTER	393058	01295	SN74LS04N	1	
Z 1		RES,CERM,SIP,6 PIN,5 RES,10K,+-2%	500876	91637	CSC06A-01-103G	1	
NOTES:	ϟ	Static sensitive part.					

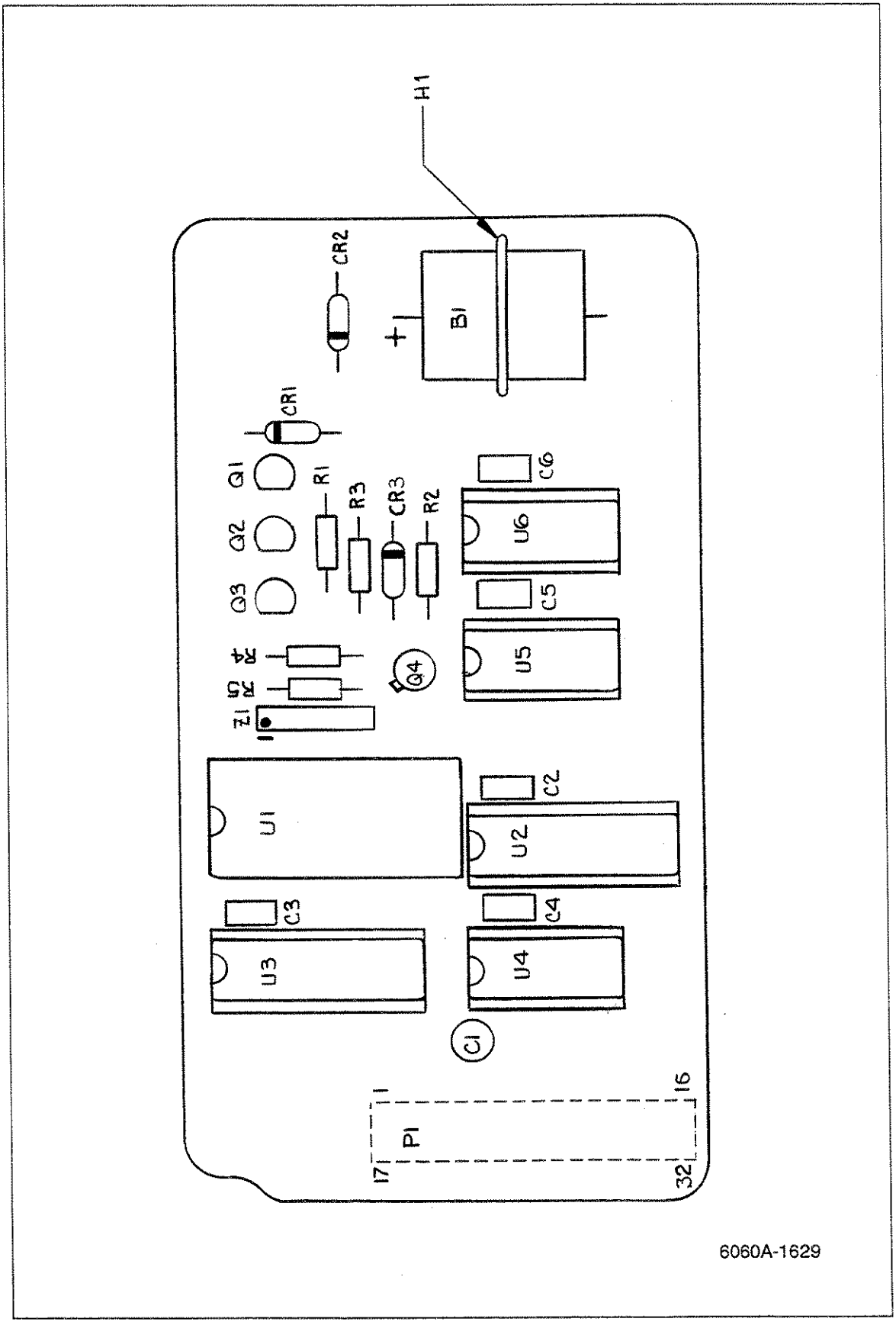

Figure 5-11. A2A8 Non-Volatile Memory PCA

Table 5-12. A3A1 Power Supply PCA

REFERENCE DESIGNATOR		DESCRIPTION	FLUKE STOCK NO	MFRS SPLY CODE	MANUFACTURERS PART NUMBER OR GENERIC TYPE	TOT QTY	NOTES
C 1		CAP,AL,2200UF,+30-10%,35V,SOLV PROOF	715334	62643	KME35VN222K23X27LLV	1	
C 2, 5		CAP,AL,10000UF,+30-10%,35V,SOLV PROOF	614990	62643	KME35VN103K31X42LLV	2	
C 3, 6, 12		CAP,CER,0.1UF,+-20%,50V,X7R	573808	04222	SR215C104MAA	3	
C 4, 7, 15, C 20		CAP,TA,6.8UF,+-20%,35V	363713 363713	56289	199D685X0035DA2	4	
C 8		CAP,AL,15000UF,+30-10%,25V,SOLV PROOF	732958	62643	KME25VN153K31X42LLV	1	
C 9, 21, 22		CAP,TA,2.2UF,+-20%,20V	161927	56289	199D225X0020BA2	3	
C 10		CAP,TA,22UF,+-20%,15V	423012	56289	199D226X0015DA2	1	
C 11		CAP,AL,470UF,+30-10%,80V,SOLV PROOF	574160	62643	KME80VN471K23X27LLV	1	
C 13, 14		CAP,TA,4.7UF,+-20%,50V	363721	56289	199D475X0050DA2	2	
C 16- 19		CAP,POLYES,0.22UF,+-10%,100V	436113	68919	MKS4224K100V	4	
CR 1, 2, 6		DIODE,SI,RECT,BRIDGE,BV=100V,IO=2.0A	392910	14936	2KBP01M	3	
CR 3, 4, 8		DIODE,SI,100 PIV,1.0 AMP	698555	04713	1N4002	3	
CR 5		DIODE,SI,45PIV,7.5A,DUAL SCHOTTKY	741322	04713	MBR1545CT	1	
CR 7	ϟ	ZENER,UNCOMP,6.2V,5%,20.0MA,0.4W	325811	04713	1N753	1	
E 1- 5		TERM,FASTON,TAB,.110,SOLDER	512889	00779	62395-1	16	
H 1		SCREW,PH,P,LOCK,STL,4-40,.250	740746	74594	740746	1	
H 3		NUT,HEX,STL,4-40	110635		COMMERCIAL	1	
J 1		HEADER,1 ROW,.156CTR,12 PIN	512160	00779	1-641202-2	1	
J 2		HEADER,1 ROW,.156CTR,5 PIN	512186	00779	641202-5	1	
J 4		HEADER,1 ROW,.100CTR,15 PIN	758011	00779	1-641126-5	1	
J 5		HEADER,1 ROW,.100CTR,6 PIN	758003	00779	641126-6	1	
J 6		HEADER,1 ROW,.100CTR,7 PIN	757997	00779	641126-7	1	
MP 1		HEAT DIS,VERT,1.25X.875X.2S,TO-220	524934	13103	6025B-TT	1	
R 1		RES,MF,249,+-1%,0.125W,100PPM	168203	91637	CMF-55 2490F T-1	1	
R 2		RES,MF,6.65K,+-1%,0.125W,100PPM	294918	91637	CMF-55 6651F T-1	1	
R 3		RES,VAR,CERM,1K,+-10%,0.5W	285155	80294	3386S-1-102	1	
R 4		RES,CF,10K,+-5%,0.25W	348839	59124	CF1/4 102J	1	
R 6- 9		RES,CF,5.1,+-5%,0.25W	441287	59124	CF1/4 5R1J	4	
R 10, 13		RES,CF,220,+-5%,0.25W	342626	59124	CF1/4 221J	2	
R 11		RES,CF,1,+-5%,0.25W	357665	59124	CF1/4 1R0J	1	
R 12		RES,CF,0.51,+-5%,0.25W	381954	59124	CF1/4 0R51J	1	
S 1		SWITCH,SLIDE,DPDT	452862	79727	GS113-(0018)-G20-32	1	
U 1	ϟ	IC,VOLT REG,FIXED,+15 VOLTS,1.5 AMPS	413187	01295	UA7815CKC3	1	
U 2	ϟ	IC,VOLT REG,FIXED,-15 VOLTS,1.5 AMPS	413179	04713	MC7915CT	1	
U 4	ϟ	IC,VOLT REG,ADJ,1.2 TO 37 V,1.5 AMPS	460410	27014	LM317T	1	
U 5	ϟ	IC,VOLT REG,FIXED 15VOLTS,1.5A	772830	04713	TL780-15CKC	1	
U 6	ϟ	THYRISTOR,SI,TRIAC,VBO=200V,8.0A	413013	04713	T2800BT	1	
VR 9, 10	ϟ	ZENER,UNCOMP,62.0V,5%,20MA,5.0W	559567	04713	1N5372B	2	
NOTES:	ϟ	Static sensitive part.					

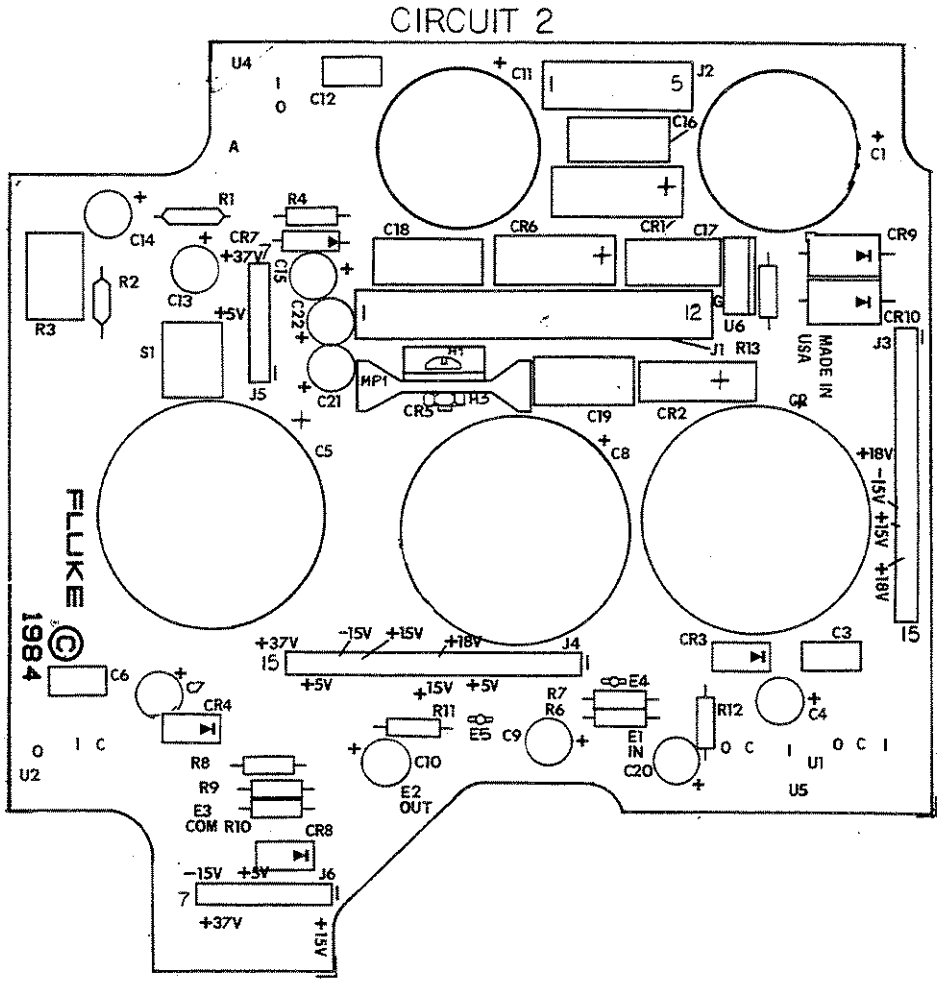

Figure 5-12. A3A1 Power Supply PCA

Table 5-13. A3A3A1 IEEE-488 Interface PCA

REFERENCE DESIGNATOR		DESCRIPTION	FLUKE STOCK NO	MFRS SPLY CODE	MANUFACTURERS PART NUMBER OR GENERIC TYPE	TOT QTY	NOTES
C 1- 4, 6,3 C 7, 9- 11		CAP,POLYES,0.22UF,+-10%,50V	706028 706028	68919	MKS1224K50B	9	
H 1, 2		BOARD SPACER	856224	89536	856224	2	
J 1		CONN,MICRO-RIBBON,REC,PWB,RA,24 POS	658039	00779	553811-1	1	
L 1- 3		CHOKE,6TURN	320911	89536	320911	3	
P 1		SOCKET,2 ROW,PWB,0.100C,RT ANG,26 POS	543512	00779	2-535512-0	1	
R 1		RES,CF,1K,+-5%,0.25W	343426	59124	CF1/4 102J	1	
S 1		SWITCH,DIP,SPST,PIANO,SEALED,8 POS	658567	00779	1-435802-5	1	
U 1	ϟ	IC,NMOS,GPIB TALKER/LISTENER/CNTRLR	773143	33297	UPD7210 (C OR D)	1	
U 3, 4	ϟ	IC,LSTTL,OCTL IEEE-488 BUS TRANSCVR	524835	04713	MC3447P3	2	
U 6	ϟ	IC,LSTTL,OCTAL D TRANSPARENT LATCHES	504514	27014	DM74LS273N	1	
U 7	ϟ	IC,LSTTL,OCTL BUS TRNSCVR W/3-ST OUT	477406	01295	SN74LS245N	1	
U 8	ϟ	IC,TTL,QUAD 2 INPUT AND GATE	393066	01295	SN74LS08N	1	
Z 1- 4		RES,CERM,SIP,10 PIN,9 RES,10K,+-2%	414003	91637	CSC10A-01-103G	4	
NOTES:	ϟ	Static sensitive part.					

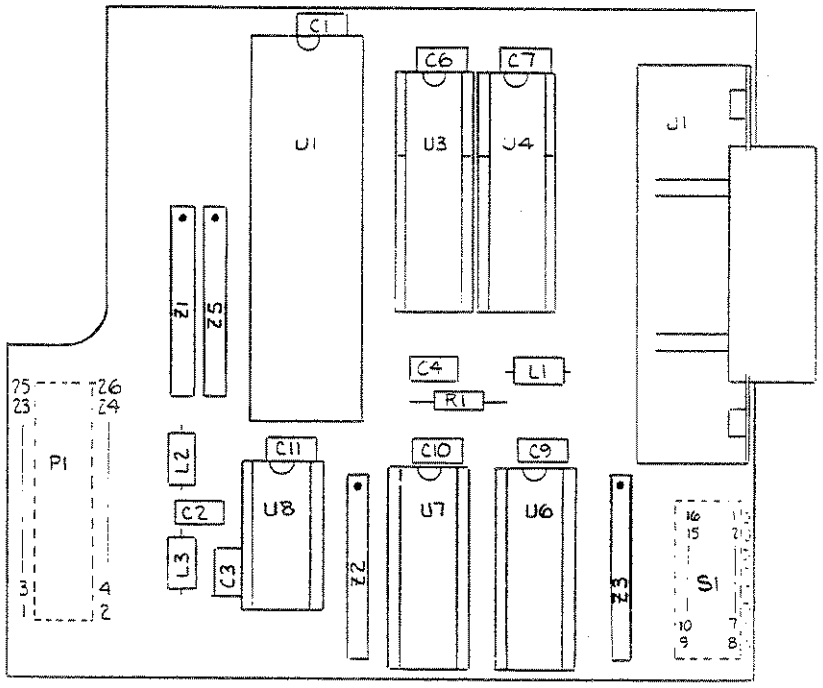

Figure 5-13. A3A3A1 IEEE-488 Interface PCA

FEDERAL SUPPLY CODES FOR MANUFACTURERS

00779
AMP, Inc.
Harrisburg, PA

01121
Allen-Bradley Co.
Milwaukee, WI

01295
Texas Instruments Inc.
Semiconductor Group
Dallas,TX

04222
AVX Corp.
AVX Ceramics Div.
Myrtle Beach, SC

04713
Motorola Inc.
Semiconductor Products Sector
Phoenix, AZ

05791
Lyn-Tron Inc.
Burbank, CA

06383
Panduit Corp.
Tinley Park, IL

06915
Richco Plastic Co.
Chicago, IL

07263
Fairchild Semiconductor
North American Sales
Cupertino, CA

09214
General Electric Co.
Semiconductor Products Dept.
Auburn, NY

0BW21
Noritake Co. Inc.
Burlington, MA

0K392
Shin-Etsu Silicones of America
(S P America)
Torrance, CA

0LUA3
Philips Components
Slatersville, RI

10059
Barker Engineering Corp.
Kenilworth, NJ

12020
Ovenaire
Div. of Electronic Technologies
Charlottesville, VA

13103
Thermalloy Co., Inc.
Dallas, TX

14552
Microsemi Corp.
(Formerly Micro-Semiconductor)
Santa Ana, CA

14936
General Instrument Corp.
Power Semiconductor Div.
Hicksville, NY

15542
Mini-Circuits Laboratory
Div of Scientific Components
Corp.
Brooklyn, NY

15818
Teledyne Semiconductor
Teledyne Inc. Co.
Mountain View, CA

17856
Siliconix Inc.
Santa Clara, CA

18310
Concord Electronics Corp.
New York, NY

18324
Signetics Corp.
Military Products Div.
Orem, UT

1AV65
Mini-Circuits
c/o Robtron Inc.
Brooklyn, NY

20584
Enochs Inc.
Indianapolis, IN

21845
Solitron Devices Inc.
Semiconductor Group
Rivera Beach, FL

22526
DuPont, El DeNemours & Co.
Inc.
DuPont Connector Systems
New Cumberland, PA

22670
GM Nameplate, Inc.
Seattle, WA

24355
Analog Devices Inc.
Norwood, MA

24759
Lenox-Fugle Electronics Inc.
South Plainfield, NJ

25088
Siemens Corp.
Iselin, NJ

26233
Nylok Fastener Corp.
Carson, CA

26805
M/A-COM Omni Spectra Inc.
Microwave Connector Div.
Sub of M/A-Com Inc.
Waltham, MA
Formerly Omni Spectra

27014
National Semiconductor Corp.
Santa Clara, CA

28213
Minnesota Mining & Mfg. Co.
Consumer Specialties Div. 3M
Center
Saint Paul, MN

28480
Hewlett-Packard Co.
Corporate HQ
Palo Alto, CA

2M021
EFAB Mfg. Inc.
Charlottesville, VA

2M530
John Perine
Seattle, WA

30035
Jolo Industries Inc.
Garden Grove, CA

30800
General Instrument Corp.
Capacitor Div.
Hicksville, NY

32997
Bourns Inc.
Trimpot Div.
Riverside, CA

33297
NEC Electronics USA Inc.
Electronic Arrays Inc. Div.
Mountain View, CA

34371
Harris Corp.
Harris Semiconductor Products
Group
Melbourne, FL

34641
Instrument Specialties Co.,Inc.
Euless, TX

49569
IDT (International Development
& Trade)
Dallas, TX

4U402
Roederstein Electronics Inc.
Statesville, NC

50088
SGS - Thomson Microelectron-
ics Inc.
Formerly Thomson
Components-Mostek Corp.
Carrollton, TX

50273
Fenwal Electronics Inc.
Milford, MA

50579
Siemens Components Inc.
Optoelectronics Div.
Cupertino, CA

51406
Murata Erie, No. America Inc.
Symma, GA

51506
Accurate Screw Machine Co.
(ASMCO) Nutley, NJ

52763
Stettner-Electronics Inc.
Chattanooga, TN

53217
Technical Wire Products Inc.
DBA Tecknit Inc.
Santa Barbara, CA

54583
TDK Electronics Corp.
Port Washington, NY

55285
Bercquist Co. Inc., The
Minneapolis, MN

55566
RAF Electronic Hardware Inc.
Seymour, CT

56289
Sprague Electric Co.
Nashua, NH

56878
SPS Technologes Inc.
Aerospace & Industrial Products
Div.
Jenkintown, PA

SERVICE CENTERS

USA

California
Fluke Technical Center
46610 Landing Parkway
Fremont, CA 94538
TEL: (415) 651-5112:

Fluke Technical Center
16715 Von Karman Avenue
Suite 110
Irvine, CA 92714
TEL: (714) 863-9031

Colorado
Fluke Technical Center
14180 East Evans Avenue
Aurora, CO80014
TEL: (303) 695-1171

Florida
Fluke Technical Center
550 S. North Lake Blvd.
Altamonte Springs, FL 32701-5227
TEL: (407) 331-2929
TLX: (810) 850-0185

Illinois
Fluke Technical Center
1150 W. Euclid Avenue
Palatine, IL 60067
TEL: (708) 705-0500
TLX: (708) 705-0064

Maryland
Fluke Technical Center
5640 Fishers Lane
Rockville, MD 20852
TEL: (301) 770-1576:

New Jersey
Fluke Technical Center
East 66 Midland Avenue
Paramus, NJ 07652-0930
TEL: (201) 599-9500

Texas
Fluke Technical Center
2104 Hutton Drive
Suite 112
Carrollton, TX 75006
TEL: (214) 406-1000

Washington
Fluke Technical Center
John Fluke Mfg. Co., Inc.
M/S 6-30
Everett WA 98203
TEL: (206) 356-5560
TLX: 185249

INTERNATIONAL

Argentina
Coasin S.A.
Virrey del Pino 4071 DPTO E-65
1430 CAP FED
Buenos Aires
TEL: 54 1 522-5248
TLX: (390) 22284 COASN AR

Australia
Phillips Customer Support
Scientific and Industrial
23 Lakeside Drive
Tally Ho Technology Park
East Burwood
Victoria 3151
TEL

Phillips Customer Support
Scientific and Industrial
25-27 Paul St. North
North Ryde, N.S.W. 2113
TEL: 61 2 888-8222
TLX: (790) AA20165
AUSNRSI+PHILIND

Austria
Oesterreichische Phillips Industrie
Unternehmensbereich Prof.
Systeme
Triesterstrasse 66
Postfach 217
A-1101 Wein
TEL: 43 222-60101x1388
TLX: 133129

Belgium
Phillips Professional System S.A.
I & E Division
Service Department
Rue des Deux Gares 80
1070 Brussels
TEL: 32 2 525-6111
TLX: TX61511.PHEMB BEL/BRMS

Brazil
Hi-Tek Electronica Ltda.
Al. Amazonas 422, Alphaville
CEP 06400 Barueri
Sao Paulo
TEL: 55 011 421-5477
TLX: (391) 11 71413 HITK BR

Canada
Fluke Electronics Canada Inc.
400 Britannia Road East, Unit #1
Mississauga, Ontario
L4Z 1X9
TEL: 416 890-7600

Chile
Intronsa Inc..
Casilla 16158
Santiago 9
TEL: 56 2 232-1886, 232-4308
TLX: (332) 346351 INTRON CK

China
Fluke Service Center
Room 2111 Scite Tower
Jianguomenwai Dajie
Beijing 100004, PRC
TEL: 86 1 512-3436 or 6351
TLX: (716) 222529 FLUKE CN

Colombia
Sistemas E Instrumentacion, Ltda.
Carrera 21, NO. 39A-21, OF. 101
Ap. Aereo 29583
Bogota
TEL: 57 287-5424

Denmark
Phillips Eleltronix Systemer A/S
Strandlodsvej 4B
DK 2300
Copenhagen
TEL: 45 32 882531
TLX: 31201 phil dk

Ecuador
Proteco Coasin Cia., Ltda.
P.O. Box 228-A
Ave. 12 de Octubre
2285 y Orellana
Quito
TEL: 593 2 529684
TLX: (393) 22085 ESIND

Egypt
Phillips Egypt
10, Abdel Rahman el Rafei st.
el. Mohandessin
P.O. Box 242
Dokki Cairo
TEL: 20 2 490922
TLX: 22816 phegy un

England
Phillips Scientific
Test & Measuring Division
Colonial Way
Watford
Hertfordshire WD2 4TT
TEL: 44 923-240511
TLX: 851 934583 PHI TMD

Federal Republic of Germany
Phillips GmbH
Service VSF
Unternehmensbereich Elektronik
fuer Wissenschaft und Industrie
Oskar-Messter-Strasse 18
D-8045 Ismaning
TEL: 49 89 9605 261

Finland
Oy Phillips AB
Central Service
Sinikalliontie 1-3
P.O. Box 11
02631 ESPOO
TEL: 358 0 52572
TLX: 121875 fixheps

France
S.A. Phillips Industrielle
et Commerciale,
Science et Industry
105 Rue de Paris BP 62
93002 Bobigny, Cedex
TEL: 33-1-4942-8040
TLX: 210290 induphi

Greece
Phillips S.A. Hellenique
15,25th March Street
177 78 Tavros
10210 Athens
TEL: 30 1 4894911
TLX: 241566/241567frtgraa

Hong Kong
Schmidt & Co (H.K.) Ltd.
18/FL., Great Eagle Centre
23 Harbour Road
Wanchai
TEL: 852 5 8330222
TLX: (780) 76762 SCHMC HX

India
Hinditron Services Pvt. Inc.
33/44A Raj Mahal Vilas Extension
8th Main Road
Bangalore 560 080
TEL: 91 812 363139
TLX: (953) 845271 HSPL IN

Hinditron Services Pvt. Ltd
1st Floor, 17-B,
Mahal Industrial Estate
Mahakali Road, Andheri East
Bombay 400 093
TEL: 91 22 6300043
TLX: (953) 11-79387 HEMC IN

Hindtron Services Pvt. Ltd.
15 Community Centre
Panchshila Park
New Delhi 110 017
TEL: 011-6433675
TLX: (953) 031-61458 HCPL IN

Hinditron Services Pvt. Ltd.
Field Service Center
Emerald Complex 1-7-264
5th Floor
114 Sarojini Devi Road
Secunderabad 500 003
TEL: 08 42-821117
TLX: (953) 425-6973

Israel
R.D.T Electronics Engineering, Ltd.
P.O. Box 43137
Tel Aviv61430
TEL: 972-3-483211
TLX: (922) 371452 RDT IL

Italy
Phillips S.P.A.
Sezione I&E / T&M
Viale Elvezia 2
20052 Monza
TEL: 39-39-363-5315
TLX: 333343 philsi i

Japan
Fluke Corporation
Sumitomo Higashi Shinbashi Bldg.
1-1-11 Hamamatsucho
Minato-ku
Tokyo 105
TEL: 03 3434-0181
TLX: (781) 2424331 FLUKJPJ

Korea
Myoung Corporation
Yeo Eui Do P.O. Box 14
Seoul 150
TEL: 82 2 784-9942
TLX: K24283 MYOUNG

Malaysia
Mecomb Malaysia Sdn. Bhd.
P.O. Box 24
46700 Petaling Jaya
Selangor
TEL: 60 3 774-3422
TLX: (784) MA37764 MECOMB

SERVICE CENTERS (cont)

Mexico
Mexel Mexicana De Electronica
Industrial, S.A. De C.V.
Calle Diagonal #27 3er.
Col. Del Valle
C.P. 03100, Mexico D.F.
TEL: 52-5-682-8040
TLX: 1171038 FAIRME

Netherlands
Phillips Nederland
Test & Measurement Division
Postbox 115
5000 AC Tilburg
TEL: 31-13-390172
TLX: 52683 FLUKE

New Zealand
Phillips Customer Support
Scientific & Industrial
2 Wagener Place
Mt. Albert
Auckland
TEL: 64 9 894-160
TLX: NZ 2395 ARGENTA

Norway
Norsk A/S Phillips
I&E Service
Sandstuveien 70
Postboks 1 Manglerud
N 0680 OSLO 6
TEL: 47-2-680200
TLX: 72640 phlps n

Pakistan
IInternation Operations (PAK) Ltd.
505 Muhammadi House
I.I. Chundrigar Road
P.O. Box 5323
Karachi
TEL: 92 21 221127, 239052
TLX: (952) 24494 PIO PK

Peru
Importaciones & Representaciones
Electronicas S.A.
Avad Franklin D. Roosevelt 105
Lima 1
TEL: 51 14 288650
TLX: (394) 25663 PE IREING

Philippines
Spark Electronics Corp.
P.O. Box 610, Greenhills
Metro Manila 1502
TEL: 63 2 700-621
TLX: (722) 27901 RLA PH

Portugal
Phillips Portuguese S.A.
I&E Division
Estrada de Outurela-Carnaxide
2795 LINDA-A-VELHA
TEL: 418 00 71
TLX: 65120 PTLPGAJ

Republic of South Africa
South African Phillips (Pty) Ltd.
I&E Service Mgr.
P. O. BOX 7703
Johannesburg 2000
TEL: 27 11 889-3224
TLX:

Singapore
Rank O'Connor's Singapore Pte Ltd
98 Pasir Panjang Road
Singapore 0511
TEL: 65 4737944
TLX: (786) RS21023 OCONSIN

Spain
Phillips Iberica Sae
Depto. Tecnico Instrumentacion
c/Martinez Villergas 2
28027 Madrid
TEL: 34 1 4042200
TLX: 052-27710 dsxma eesm/op

Sweden
Phillips Kistaindustrier AB
I&E Technical Customer Support
Borgarfjordsgatan 16
S 164 93 Kista
TEL: 46-8-703-1000
TLX: 854 17173 PHILKI S

Switzerland
Phillips A.G.
Technischer Kundendienst
Postfach 670
Allmendstrasse 140
CH-8027 Zurich
TEL: 41 1 488 29 63
TLX: 815 780 11

Taiwan, R.O.C.
Schmidt Electronics Corp.
5th Floor, Cathay Min Sheng
Commercial Building,
344 Min Sheng East Road
Taipei
TEL: 886 2 501-3468
TLX: (785) 11111 SCHMIDT

Thailand
Measuretronix Ltd.
2102/31 Ramkamhaeng Road
Bangkok 10240
TEL: 66 2 375-2733,375-2734
TLX: (788) 82796 HUAMARK TH

Turkey
Turk Phillips Ticaret A.S.
Inonu Caddesi 78/80
Posta Kutusu 504-Beyoglu
Instanbul
TEL: 90 1 1435891
TLX: 24192 phtr trtrxibph

Uruguay
Coasin Uruguaya S.A.
Casilla de Correo 1400
Libertad 2525
Montevideo
TEL: 598-2-789015
TLX: (398) COAUR UY23010

Venezuela
Coasin C.A.
Calle 9 Con Calle 4, Edif. Edinurbi
Apartado de Correos Nr-70-136
Los Ruices
Caracas 1070-A
TEL: 58 2 241-0309, 241-1248
TLX: (395) 21027 EMVEN VC

Section 6
Options

OPTION NO.	TITLE	PAGE
-130	High-Stability Reference	130-1
-132	Medium-Stability Reference	132-1
-830	Rear Panel RF Output and Mod Input	830-1

6-1. INTRODUCTION

This section includes the theory of operation, a circuit description, and maintenance instructions for each option.

Option -130
High-Stability Reference

130-1. INTRODUCTION

Option -130 the High-Stability Reference, with the rear panel REF INT/EXT switch set to INT, configures the Generator's reference to be supplied by the High-Stability Reference.

130-2. OPERATION

The High-Stability Reference consists of the Auxiliary Power Supply (A3A2), and an Ovened Oscillator (Y1). The Auxiliary Power Supply is mounted inside the Generator on the rear panel, and the Ovened Oscillator is mounted inside the instrument on the side rail. Only the Auxiliary Power Supply is field repairable, and it is described here. The Auxiliary Power Supply is also available under the Module Exchange program.

130-3. CIRCUIT DESCRIPTION

The Auxiliary Power Supply is connected directly to the line power on the fuse/filter/line-voltage selector assembly to supply power to the Ovened Oscillator even when the Generator POWER switch is off. The Auxiliary Power Supply PCB (A3A2A1) includes a linear-regulated supply and an automatic line-voltage selector circuit.

The linear-regulated supply consists of a diode rectifier bridge CR1, filter capacitor C1, voltage regulator U1, and associated resistors R2, R3, and R4. The circuit associated with CR3, Q1 and U2, provides automatic line voltage selection between two line-voltage ranges. This is implemented by configuring the rectifier circuit as a bridge rectifier for the lower line voltages or as a center-tapped, full-wave rectifier for the higher line voltages.

At low line voltages (less than approximately 150V ac), transistor Q1 is conducting, thus grounding the minus terminal of rectifier CR1 and causing diode CR3 to be reverse biased. This causes the full secondary voltage of T1 to be rectified by the bridge rectifier, CR1.

When the line voltage is greater than 180V ac, (there is approximately 30V hysteresis), the comparator U2 turns off transistor Q1. Diode CR3 becomes forward biased, and the transformer center tap is effectively grounded. The voltage applied to the rectifier CR1 is then half the secondary voltage.

The comparator U2 input voltages are set by resistors R1, R6, R9, and zener diode CR4. U2 controls the base of transistor Q1. The comparator switching point is set between the low and high line voltages, with sufficient hysteresis to accommodate variations in input loading. At very low line voltages, the resistor diode combination R10 and CR5, from the 37V output of the main power supply, augment the Auxiliary Power Supply.

The Ovened Oscillator output is disabled when the control line EXREFL is set low, i.e., when the REF INT/EXT switch is set to EXT during external reference operation. The status line HSOPTL, normally at +5V, is pulled to ground when the High-Stability Reference option is installed.

130-4. ADJUSTMENTS

TEST EQUIPMENT

Frequency Standard
Oscilloscope
Two 3-ft. 50-Ohm coaxial cables, Y9111

REMARKS

The voltage adjustment (A3A2A1-R4) should be made after the first half hour of the three-hour Generator warmup period has begun. For the best results in the frequency accuracy adjustment, the Generator should be operated at room temperature for at least three hours before continuing with the adjustment procedures.

PROCEDURE

The High-Stability Reference Power supply voltage is first adjusted. Then the UUT reference and the Frequency Standard waveforms are viewed on the oscilloscope while triggering on the Frequency Standard. The ovened oscillator FREQ ADJ, COARSE, and then FINE are adjusted for a stationary display.

Voltage Adjustment

1. Remove the Generator top cover.
2. Connect the DMM to the UUT. Connect the positive lead to TP1 and the negative lead to TP3.
3. Adjust R4 for 23.4 ± 0.1V.
4. Remove the DMM connections from the UUT and replace the top cover (temporarily). Wait the remaining Generator warmup time, and perform the frequency accuracy adjustment.

Frequency Adjustment

1. Remove the top Generator cover and the two FREQ ADJ access screws from the top of the ovened oscillator.
2. Connect the Frequency Standard signal to the oscilloscope vertical input channel 1, 50 Ohms termination. Connect the UUT rear panel 10 MHz OUT to the oscilloscope vertical input channel 2, 50 Ohms termination.
3. Set the UUT rear panel UUT REF INT/EXT switch to INT.
4. Set the vertical controls of the oscilloscope to display the UUT 10-MHz signal and the Frequency Standard 10-MHz signal. Set for internal triggering on channel 1, and adjust timebase for 0.1 μsec/div.

5. Adjust the oscilloscope COARSE, and then adjust the FINE controls for a drift of less than one cycle in 10 seconds (for 0.01 ppm or better if desired.

130-5. LIST OF REPLACEABLE PARTS

Table 130-1 lists replaceable parts for the 6060A-130. Figure 130-1 is the component location diagrams for the 6060-130.

Table 130-1. A3A2A1 High-Stability Reference PCA

REFERENCE DESIGNATOR		DESCRIPTION	FLUKE STOCK NO	MFRS SPLY CODE	MANUFACTURERS PART NUMBER OR GENERIC TYPE	TOT QTY	NOTES
C 1		CAP,AL,470UF,+-20%,50V,SOLV PROOF	854620	62643	SXE50VB471M18X15MC	1	
C 2, 6		CAP,TA,4.7UF,+-20%,50V	363721	56289	199D475X0050DA2	2	
C 3, 4		CAP,TA,10UF,+-20%,35V	417683	56289	199D106X0035DA2	2	
C 5		CAP,AL,100UF,+50-20%,50V	649731	62643	SM50VB101M10X16LLV	1	
C 7		CAP,POLYES,0.1UF,+-10%,50V	696484	68919	MKS2-104K50B	1	
C 8		CAP,POLYES,0.1UF,+-10%,100V	393439	68919	MKS4-104-K-100V	1	
CR 1		DIODE,SI,RECT,BRIDGE,BV=200V,IO=1.5A	296509	30800	KBP 02M	1	
CR 2, 3, 5		DIODE,SI,100 PIV,1.0 AMP	698555	04713	1N4002	3	
CR 6	ϟ	DIODE,SI,BV=75V,IO=150MA,500MW	203323	09214	IN4448	1	
H 4, 12		SCREW,FHU,P,LOCK,STL,4-40,.312	268193	74594	268193	2	
H 5, 13		WASHER,SHLDR,NYLON,.113,.245	485417	86928	5607-50	2	
H 6, 14		NUT,CAP,EXT.LOCK,STL,4-40	195255	78189	501-040800-00	2	
H 7, 27- 29		SCREW,FH,P,LOCK,STL,4-40,.250	114884	74594	114884	4	
H 9, 33		SCREW,PH,P,LOCK,MAG SS,6-32,.375	783225	74594	783225	2	
H 10, 11		NUT,HEX,LOCK,SS,4-40	558866	72962	558866	2	
H 15, 16		SCREW,BTNH,SCKT,STL,4-40,1.250	528315	56878	38030-94-C-20	2	
H 17- 20		SCREW,PH,P,LOCK,SS,4-40,.375	256164	74594	256164	4	
H 21- 26		SCREW,PH,P,LOCK,STL,6-32,.250	152140	74594	152140	6	
H 30- 32		NUT,HEX,ELAST STOP,STL,6-32,.125	110841	72962	F21NTM-62	3	
J 2- 11		PIN,SINGLE,PWB,0.025 SQ	267500	00779	87623-1	10	
MP 1		TRANSFORMER RETAINER,HIGH STABILITY	716977	89536	716977	1	
MP 2		TRANSFORMER MOUNT, HIGH STABILITY REF	716878	89536	716878	1	
MP 3, 4		INSUL PART,POWER,SI,.750,.500	534453	55285	7403-09FR-54	2	
MP 5, 10		CABLE TIE ANCHOR,ADHSV,.160TIE	407908	06383	ABMM-A-C	2	
MP 6, 11		CABLE ACCESS,TIE,4.00L,.10W,.75 DIA	172080	06383	SST-1M	2	
MP 7		PIN,SMA ADAPTER,HIGH STAB REF CABLE	716845	89536	716845	1	
MP 8		BLOCK,SMA ADAPTER,PLATED HS REF 900	745158	89536	745158	1	
MP 9		ADAPTER, SMA(F),SMA(F)	614768	21845	SF2992-6001	1	
MP 12		MOUNTING PLATE, HIGH STABILITY OSC	716860	89536	716860	1	
Q 1	ϟ	TRANSISTOR,SI,BV= 60V, 65W,TO-220	386128	04713	TIP120T	1	
R 1		RES,MF,49.9K,+-1%,0.125W,100PPM	268821	91637	CMF-55 4992F T-1	1	
R 2		RES,MF,249,+-1%,0.125W,100PPM	168203	91637	CMF-55 2490F T-1	1	
R 3		RES,MF,4.02K,+-1%,0.125W,100PPM	235325	91637	CMF-55 4021F T-1	1	
R 4		RES,VAR,CERM,500,+-10%,0.5W	325613	80294	3386R-1-501	1	
R 5		RES,CC,2.7,+-5%,0.5W	218743	01121	EB2R75	1	
R 6, 9		RES,MF,6.34K,+-1%,0.125W,100PPM	267344	91637	CMF-55 6341F T-1	2	
R 7		RES,CF,4.7K,+-5%,0.25W	348821	59124	CF1/4 472J	1	
R 8		RES,CF,10K,+-5%,0.25W	348839	59124	CF1/4 102J	1	
R 10		RES,CC,100,+-10%,2W	109934	01121	HB1011	1	
T 1		TRANSFORMER, AUXILIARY	731281	89536	731281	1	
TP 1- 4		TERM,FASTON,TAB,.110,SOLDER	512889	00779	62395-1	4	
U 2	ϟ	IC,COMPARATOR,DUAL,LO-PWR,8 PIN DIP	478354	27014	LM393N	1	
U 10	ϟ	IC,VOLT REG,ADJ,1.2 TO 37 V,1.5 AMPS	460410	27014	LM317T	1	
VR 4	ϟ	ZENER,UNCOMP,6.2V,5%,20.0MA,0.4W	325811	04713	1N753	1	
W 4		CABLE ASSY HS 10MHZ	738567	98291	738567	1	
W 13		CABLE ASSY,HS OSCILLATOR	748715	89536	748715	1	
W 14		CABLE ASSY,AUX PWR SUPPLY	748707	89536	748707	1	
Y 1		OSCILLATOR,10MHZ,OVENIZED	512079	12020	49-22A-10MHZ	1	

NOTES:
ϟ Static sensitive part.

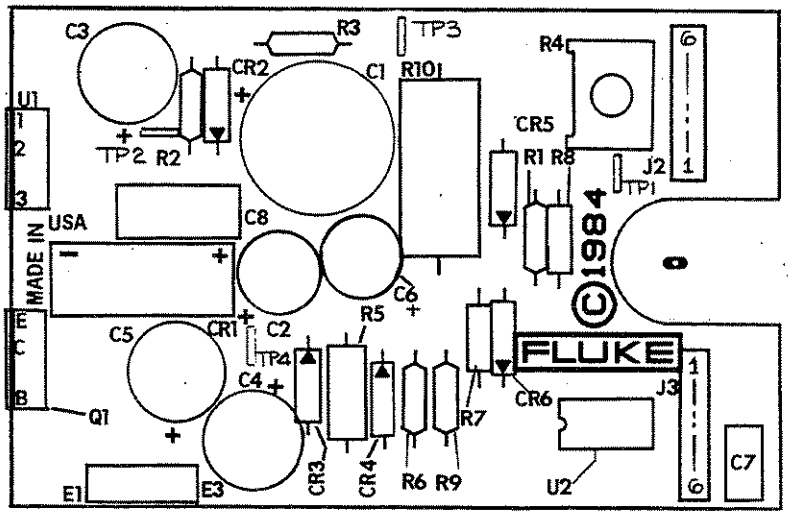

6060A-1632

Figure 130-1. A3A2A1 High-Stability Reference PCA

Option -132
Medium-Stability Reference

132-1. INTRODUCTION
The Option -132 Medium-Stability Reference provides the Generator with a medium-stability frequency reference.

132-2. OPERATION
The Medium-Stability Reference is selected as as the Generator's reference when the Generator's rear panel REF INT/EXT switch is set to INT.

NOTE

The Medium-Stability Reference does not have standby power nor is its oven kept warm during external reference operation. Therefore, each time the Medium-Stability Reference is selected, a warm-up time is required to meet specifications. The warm-up time is typically 5 to 10 minutes. A "Freq. Uncal" condition may be observed during this warm-up period.

132-3. CIRCUIT DESCRIPTION
The A5A1 Medium-Stability Reference PCA consists of an ovened oscillator (Y1) and an ac-to-TTL converter. The A5A1 Medium-Stability Reference PCA is field repairable and is also available under the Module Exchange Program. The ovened oscillator (Y1) is not field repairable and is not described here.

The A5A1 Medium-Stability Reference PCA is mounted on the left side rail. The PCA is connected to the +5V power supply and to control signals via cable W25. The output is connected to the A2A1 Synthesizer PCA through cable W24.

Two NAND gates of U1 are used to convert the oscillator's ac-coupled output to a TTL signal. Another NAND gate of U1 and transistor Q1 control the power for the oven and oscillator circuit of Y1.

When the REF INT/EXT switch is set to EXT for external reference operation, the control line EXREFL is set low. This disables the oven and oscillator circuit of Y1 and also disables the ac-to-TTL converter to prevent it from oscillating spuriously.

132-4. ADJUSTMENT
This procedure is used to adjust the frequency of the Medium-Stability Reference. For the best results, the Generator should be warmed up at room temperature before proceeding with the adjustment procedure (see step 1, below).

TEST EQUIPMENT

Frequency Standard
Oscilloscope
Two 3-ft, 50-ohm coaxial cables (Fluke Accessory Y9111)

REMARKS

In this procedure, the waveforms of the Unit Under Test (UUT) and the Frequency Standard are viewed on the oscilloscope while triggering on the Frequency Standard. The ovened oscillator's FREQ ADJ control is then adjusted for a stationary display.

NOTE

An alternate method of adjustment is to count the 10-MHz reference signal at the 10 MHz OUT connector with a counter that has a suitably stable and accurate reference.

PROCEDURE

1. Turn the Generator on, set the REF INT/EXT switch to INT, and then wait 1 hour. (If the Generator has already warmed up for at least 40 minutes, it is sufficient to wait an additional 20 minutes after the REF INT/EXT switch is set to INT.)

2. Remove the Generator top cover. The frequency adjustment control is located on the center top of the PCA and is accessed through the upper rear left side panel of the Generator.

3. Connect the Frequency Standard's output signal to the oscilloscope's vertical input channel 1, with 50 ohms termination. Connect the UUT's rear panel 10-MHz OUT to the oscilloscope's vertical input channel 2, with 50 ohms termination.

4. Set the vertical controls of the oscilloscope to display the UUT's 10-MHz signal and the Frequency Standard's 10-MHz signal. Set the oscilloscope for internal triggering on channel 1 and adjust the timebase for 0.1 usec/division.

5. Adjust the oscillator FREQ for a drift of less than one cycle in 10 seconds (or a counter frequency within 0.1 Hz of 10 MHz) for 0.01 ppm or better if desired.

132-5. LIST OF REPLACEABLE PARTS

A list of replaceable parts for Option -132 is shown in Table 132-1. A component location diagram for Option -132 is shown in Figure 132-1.

Table 132-1. A5A1 Medium-Stability Reference PCA

REFERENCE DESIGNATOR	DESCRIPTION	FLUKE STOCK NO	MFRS SPLY CODE	MANUFACTURERS PART NUMBER OR GENERIC TYPE	TOT QTY	NOTES
C 1, 3, 5-C 8	CAP,POLYES,0.1UF,+-20%,50V	732883 732883	68919	MKS02104P50V	6	
C 2	CAP,TA,10UF,+-20%,10V	176214	56289	199D106X0010EA2	1	
C 4	CAP,CER,1000PF,+-20%,100V,X7R	816181	04222	SR071C102MAA	1	
H 1, 3, 4	SCREW,PH,P,LOCK,STL,6-32,.250	152140	74594	152140	3	
H 2, 5	SCREW,PH,P,LOCK,MAG SS,6-32,.281	772236	74594	772236	2	
H 6	SCREW,PH,P,LOCK,STL,4-40,.250	740746	74594	740746	1	
H 7	NUT,HEX,LOCK,SS,4-40	558866	72962	558866	1	
H 8	INSULATOR OSCILLATOR	487710	89536	487710	1	
J 1	CONN,COAX,SMB(M),PWB,RT ANG	353243	26805	5164-5003-09	1	
J 2	HEADER,1 ROW,.100CTR,6 PIN	758003	00779	641126-6	1	
L 1	CHOKE,6TURN	320911	89536	320911	1	
MP 1	SPACER,SWAGE,.250 RND,BR,4-40,.125	335596	55566	3045B440B14-MOD.=.125	1	
MP 2- 4	SPACER,SWAGE,.250 RND,BR,6-32,.250	446351	55566	3047B632B14-MOD.=.250	3	
MP 5	ϟ PWB, 50 OHM PIN ADAPTER	792770	89536	792770	1	
P 1	PIN TEST BASE	698472	20584	698472	1	
Q 1	ϟ TRANSISTOR,SI,BV= 80V, 40W,TO-220	504944	27014	2N6107	1	
R 1	RES,CF,100,+-5%,0.25W	348771	59124	CF1/4 101J	1	
R 2	RES,CF,120,+-5%,0.25W	442293	59124	CF1/4 121J	1	
R 3, 5	RES,CF,2.2K,+-5%,0.25W	343400	59124	CF1/4 222J	2	
R 4	RES,CF,1.5K,+-5%,0.25W	343418	59124	CF1/4 152J	1	
R 6	RES,CF,1K,+-5%,0.25W	343426	59124	CF1/4 102J	1	
TP 1	TERM,FASTON,TAB,.110,SOLDER	512889	00779	62395-1	1	
U 1	ϟ IC,STTL,QUAD 2 INPUT NAND GATE	363580	01295	SN74S00N	1	
W 24	CABLE ASSY	546366	89536	546366	1	
W 25	CABLE ASSY, CONTROL, MED STAB REF OPT	792804	89536	792804	1	
Y 1	OSCILLATOR,10MHZ,OVENIZED	484410	12020	OSC85-13-10MHZ	1	
NOTES:	ϟ Static sensitive part.					

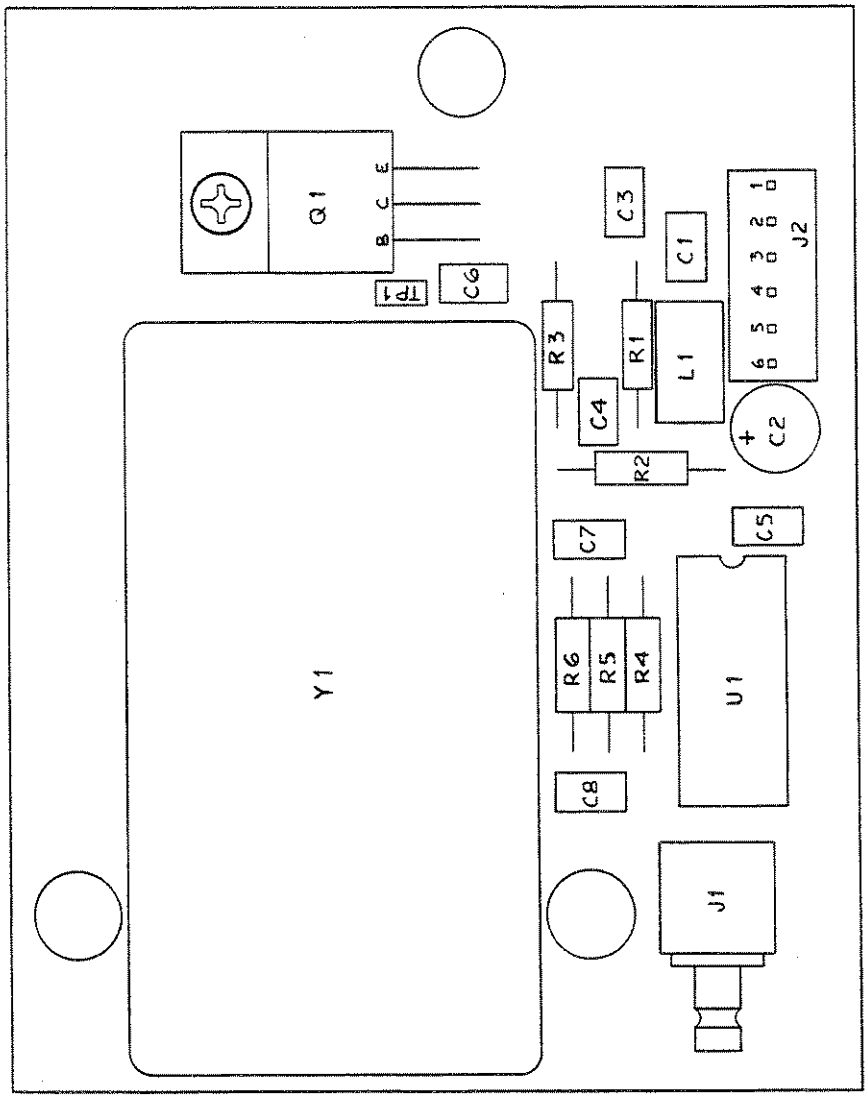

Figure 132-1. A5A1 Medium-Stability Reference PCA

Option -830
Rear Panel RF Output and Mod Input

830-1. INTRODUCTION

The Rear Panel RF Output and MOD Input (Option -830), moves the RF OUTPUT and MOD INPUT connectors from the front panel to the rear panel of the Generator. An insulating spacer is used when the RF OUTPUT connector is mounted on the rear panel to reduce ground loops. A longer semi-rigid coaxial SMA cable assembly (W17) replaces the standard cable (W1). The option switch on the Controller is set to indicate that the option is installed.

830-2. OPERATION

The additional signal loss of this longer cable is compensated using instrument-independent correction data stored in the Output Calibration EPROM. The Controller applies this correction data only when the rear panel RF Output option jumper (S1 pin 4) is installed on the Controller PCA.

830-3. CIRCUIT DESCRIPTION

This option does not change the operation or specifications of the Generator.

830-4. MAINTENANCE

This option does not change the performance tests, calibration, adjustment, or service of the Generator.

Section 7
Schematic Diagrams

CONTENTS

		PAGE
7-1.	Mnemonics	7-2
7-2.	Schematic Symbols	7-3
7-3.	Synthesizer Block Diagram	7-5
7-4.	VCO and Output Block Diagram	7-6
7-5.	A1A1 Display PCA	7-7
7-6.	A2A1 Synthesizer PCA	7-10
7-7.	A2A2 VCO PCA	7-17
7-8.	A2A4 Output PCA	7-19
7-9.	A2A5A4 Attenuator/RPP PCA	7-24
7-10.	A2A5A5 Relay Driver/RPP PCA	7-25
7-11.	A2A7 Controller PCA	7-27
7-12.	A2A8 Non-Volatile Memory PCA	7-31
7-13.	A3A1 Power Supply PCA	7-32
7-14.	A3A3A1 IEEE-488 Interface PCA	7-33
7-15.	A3A2A1 High-Stability Reference PCA	7-34
7-16.	A5A1 Medium-Stability Reference PCA	7-35

MNEMONIC	DESCRIPTION	SIGNAL TYPE *
A 0-15	Address	B
A12DB	Attenuator 12-dB Section Control	L
A24(1-5)	Attenuator 24-dB Section Controls	L
A6DB	Attenuator 6-dB Section Control	L
BAB 0-3	Module Section Address	H
BD 0-7	Module Section Data	B
BSEL 0,1	Module Section Select	L
CKN	N-Divider Clock	L
CLR	Display Clear	L
D 0-7	Data	B
DBIN	Read Enable	L
DD 0-7	Display Data	B
DIG	Display Digit Select	L
EXREF	External Reference Control	L
EXTAM	External AM Control	L
EXTFM	External FM Control	L
FIL 1,2	Display Filament Supply	AC+DC
FM 0-9	FM Deviation DAC Control	H
FMEN	FM Enable	H
FMRNG 0-2	FM Range Control	H
FMV	FM Audio	AF
HAOCT	Half-Octave Control	H
HET	Het (low) Band Control	L
HSOPT	High-Stability Option Installed	L
IEA 13-15	IEEE Address Bus	B
IEADR	IEEE Address Latch Enable	L
IECS	IEEE Chip Enable	L
IED 0-7	IEEE Data Bus	B
IEDB	IEEE Read Enable	L
IEIN	IEEE Option Installed	L
IEINT	IEEE Interrupt	L
IEW	IEEE Write Enable	L
INTAM	Internal AM Control	L
INTFM	Internal FM Control	L
KBIN	Keyboard Input Select	H
KN 0-9	PLL Gain Compensation DAC	H
KNV	Main PLL Gain Compensation Voltage	DC
KV 0-9	VCO Compensation DAC Control	H
LEV 0-11	RF Level DAC Control	H
MF400	Modulation Frequency Control	L
MID	Mid Band Control	L
MLEVHI	External Modulation High-Level Status	H
MLEVLO	External Modulation Low-Level Status	H
MODE	Triple-Modulus Prescaler	L
NVCS	NVM RAM Chip Select	L
NVEN	NVM Enable	L
NVIN	NVM Installed	L
RIN	10-MHz Output Buffer Enable	H
RMUXD,1	Reference Multiplexer Select	H
ROPT	Rear Output Option Installed	L
RPP	RPP Option Installed	L
RPRST	RPP Reset Control	H
RPTRP	RPP Tripped Status	L
SEG 1-3,9	Display Segment Select	L
SHEN	Sub-Harmonic Reference Control	L
SHET	Synthesizer Heterodyne Control	L
SHTUNE	Sub-Harmonic Ref Tuning Voltage	DC
TBOUT	Output Test Bit	H
TBSYN	Synthesizer Test Bit	H
TRMOD	Triple-Modulus Prescalar Select	L
TRSEQ	Remote Sequence Trigger	L
TUNE	Main PLL Tuning Voltage	DC
UNLOK	PLL Unlocked or Overmodulated Status	L
UNLVL	ALC Loop Unleveled Status	L
WE	Write Enable	L
XOEN	10-MHz Crystal Oscillator Control	L

* Six SIGNAL types are listed in the following:

DC= DC Control
AC= Line Frequency
AF= Audio (modulation) Signal
L = Logic (binary) signal, active low at the source
H = Logic (binary) signal, active high at the source
B = Dynamic bus

Figure 7-1. Mnemonics

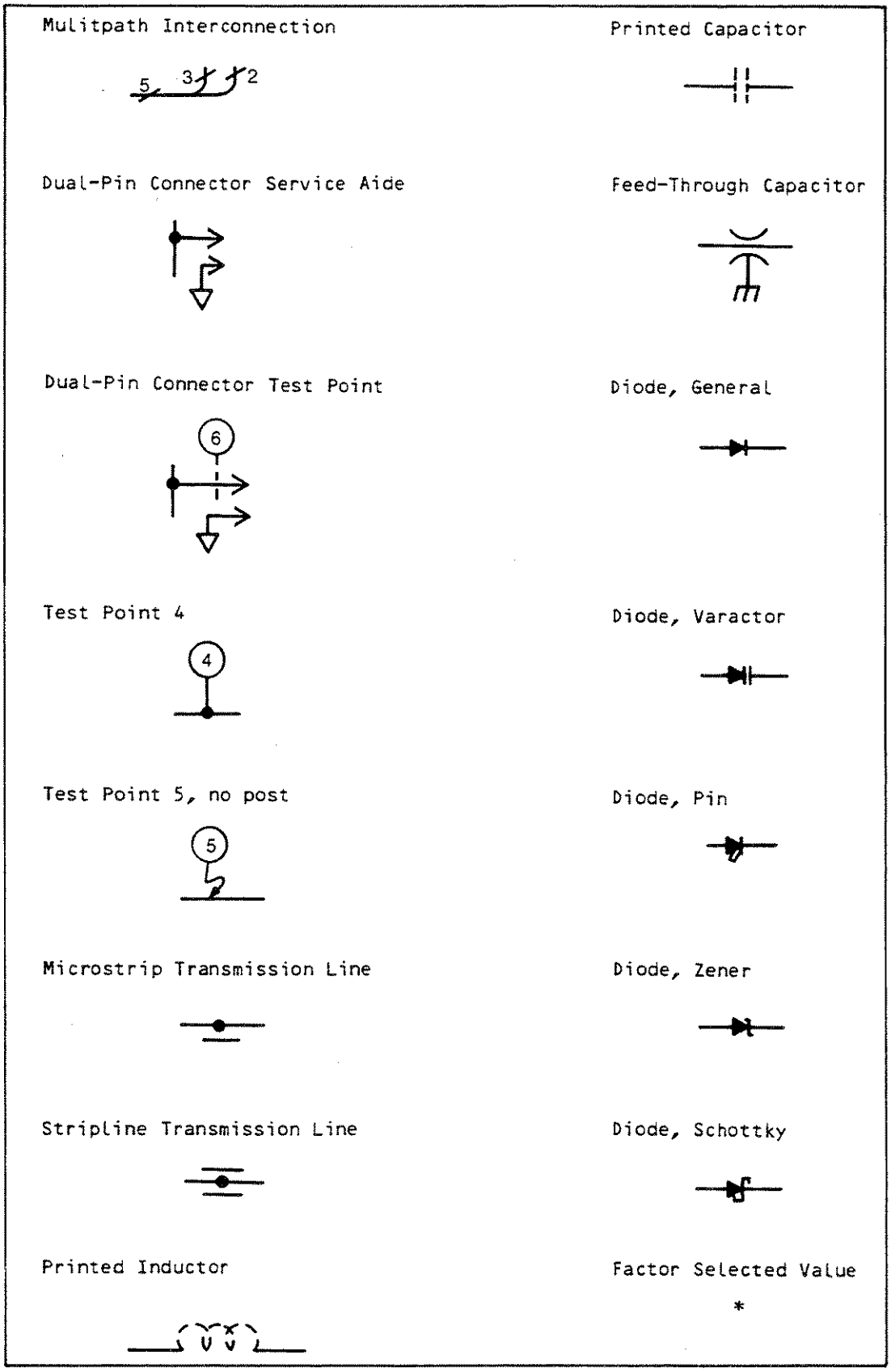

Figure 7-2. Schematic Symbols

Value Has Changed

+

Screw Driver Adjustment

Front Panel Designation

RF OUTPUT

Rear Panel Designation

10 MHZ

Rear Panel Screw Driver Adjustment

Ø BAL

Earth Ground

Chassis Ground

Common Connection (PCB Ground)

Non-Plug-In Connection

Plug-In Connection, Male and Female

Plug-In Connection, Transmission Line

Soldered-In Jumper

Interconnection Information

Coax Connector, Female

Coax Connector, Male

Coax Cable, Soldered In

Figure 7-2. Schematic Symbols (cont)

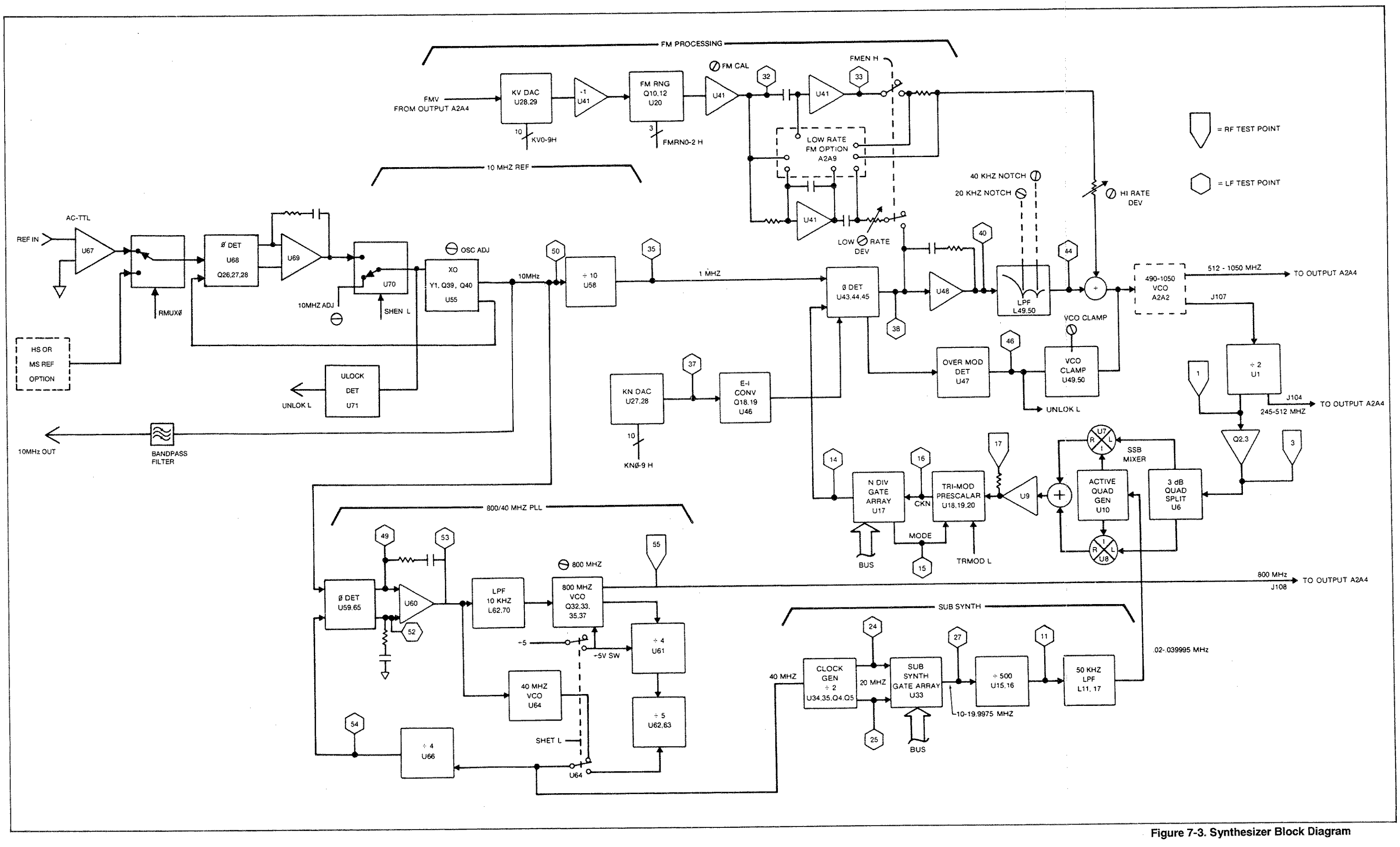

Figure 7-3. Synthesizer Block Diagram

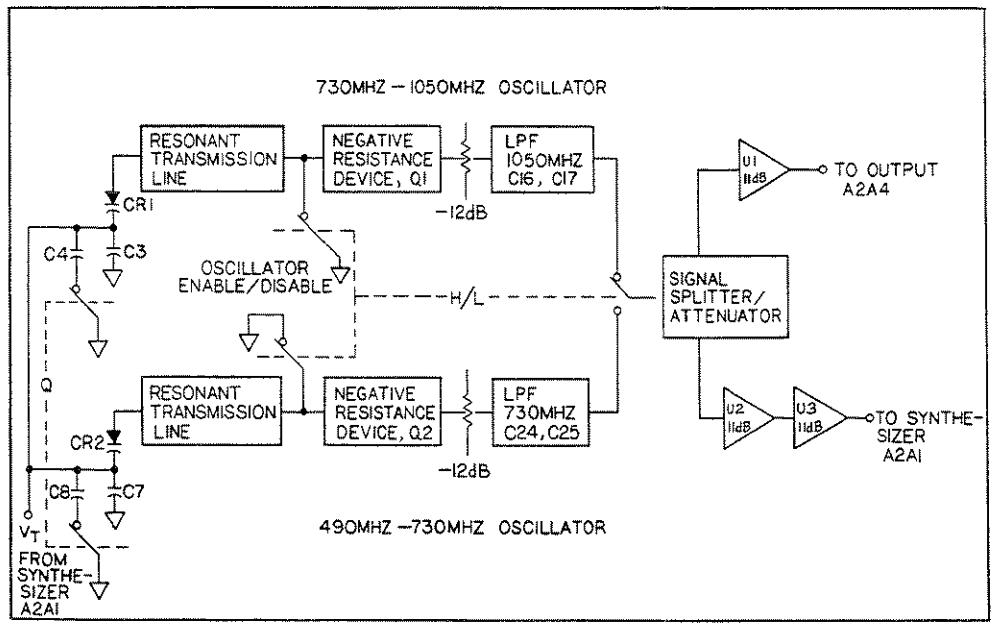

VCO BLOCK DIAGRAM

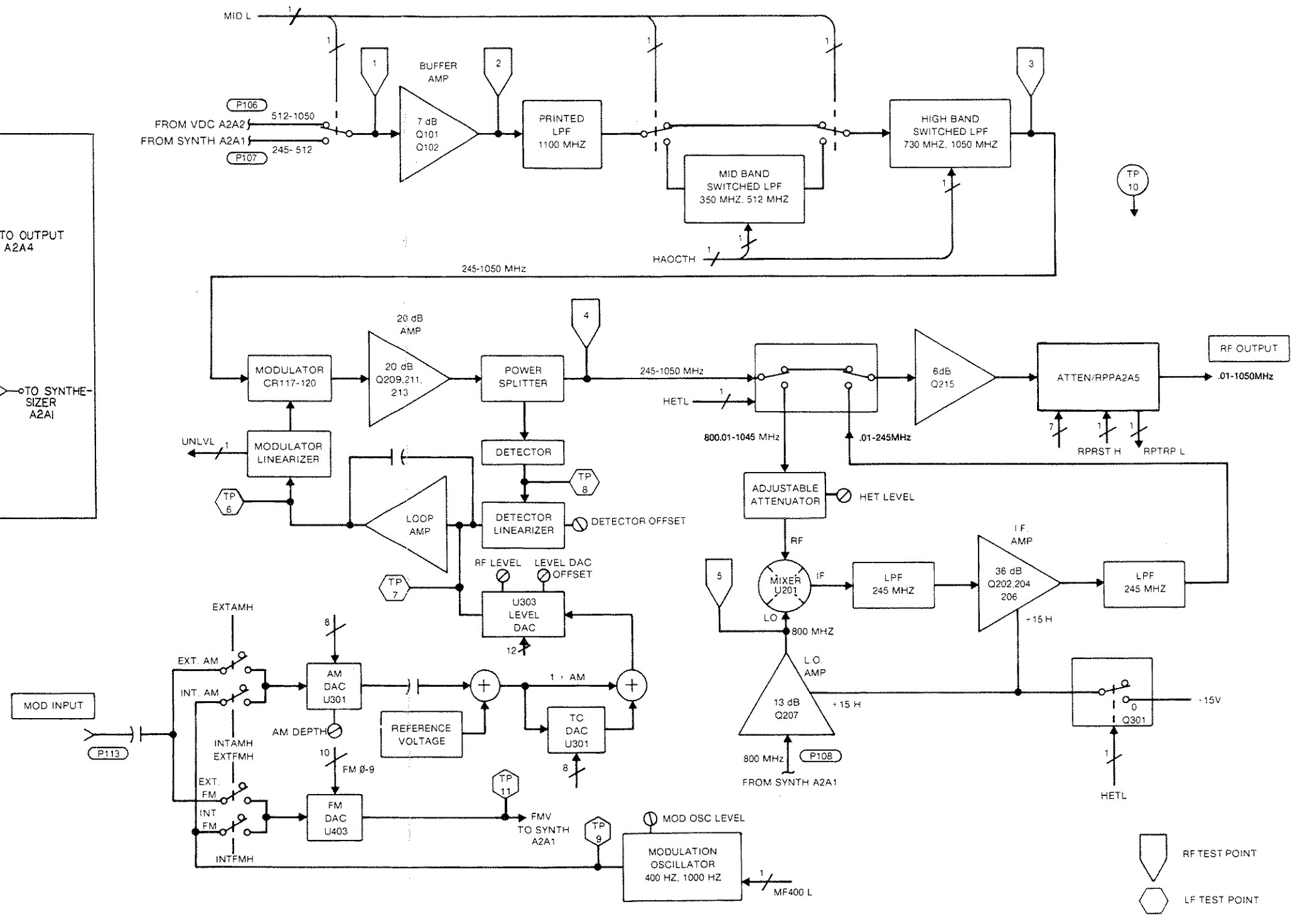

OUTPUT BLOCK DIAGRAM

Figure 7-4. VCO and Output Block Diagram

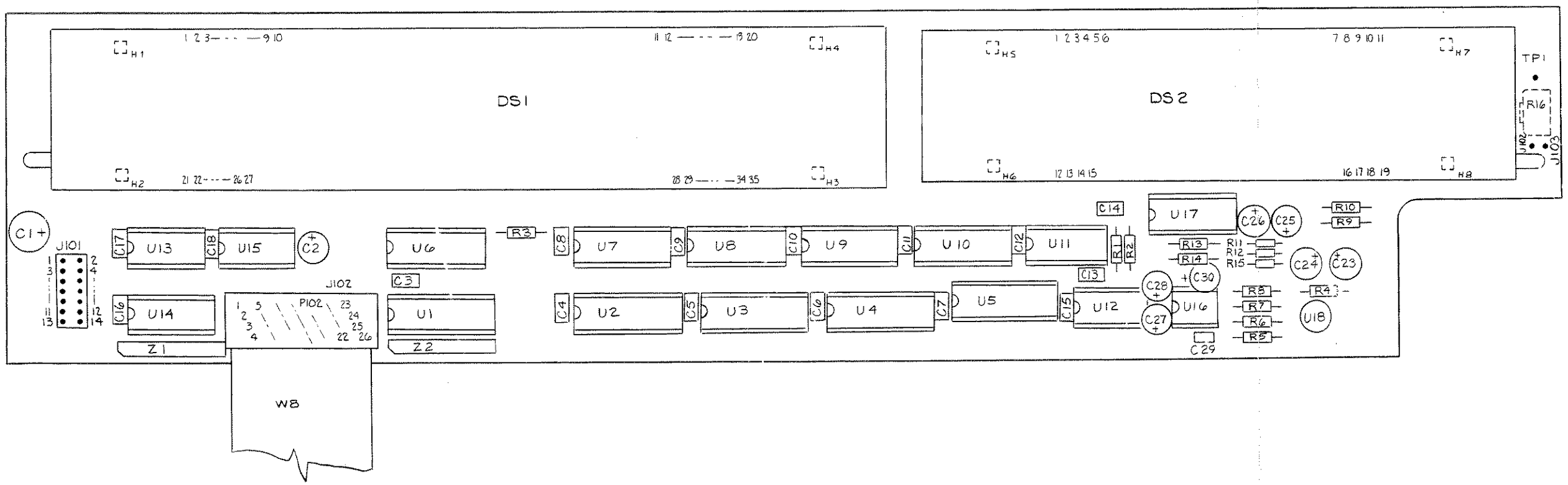

6060A-1611

Figure 7-5. A1A1 Display PCA

MODULATION FREQUENCY DISPLAY

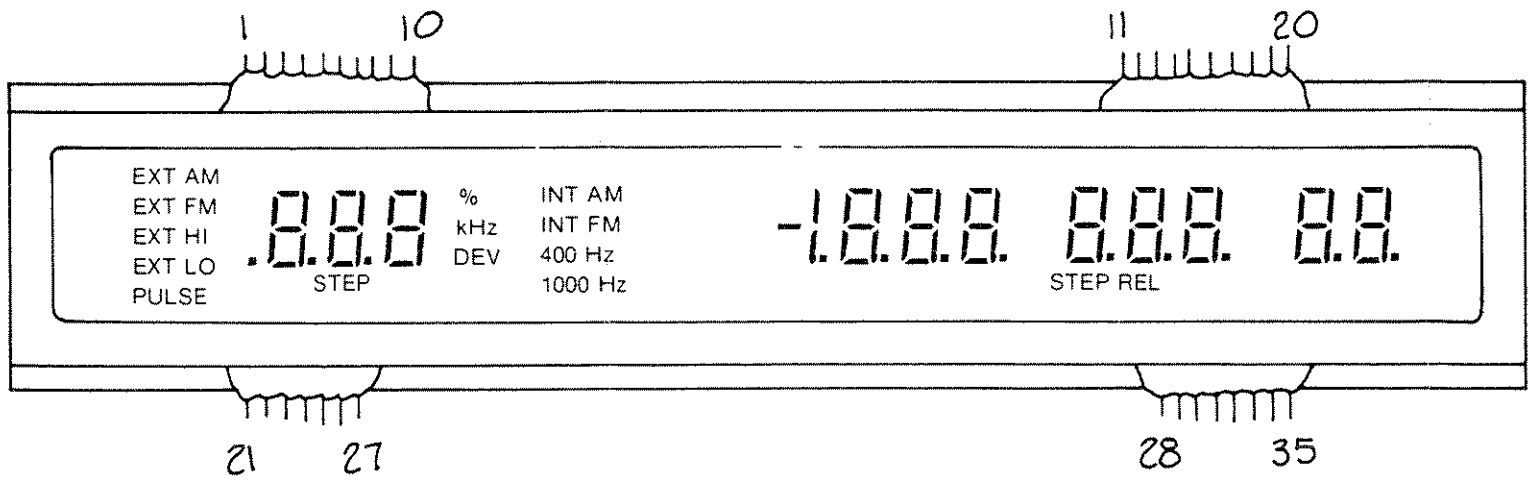

AMPLITUDE DISPLAY

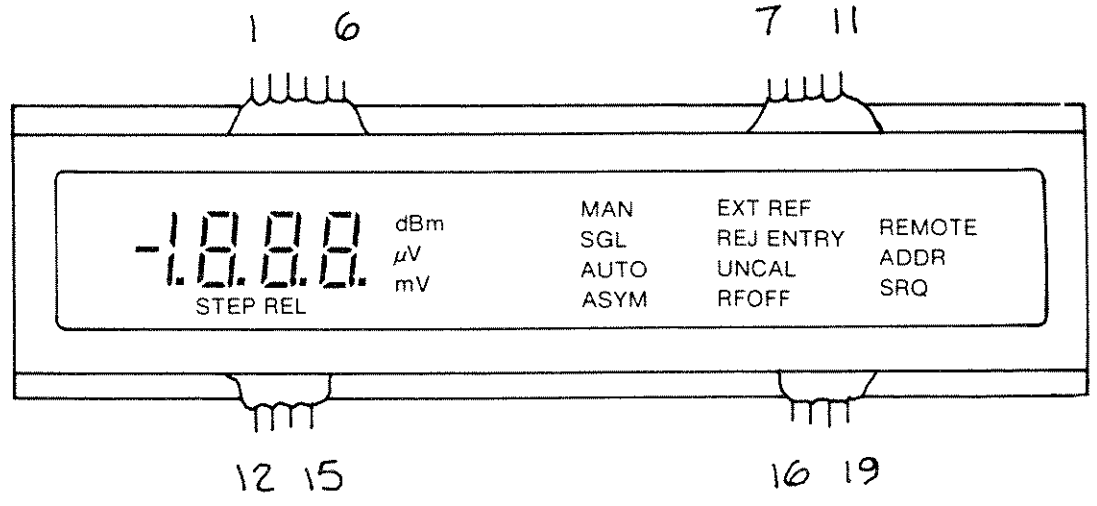

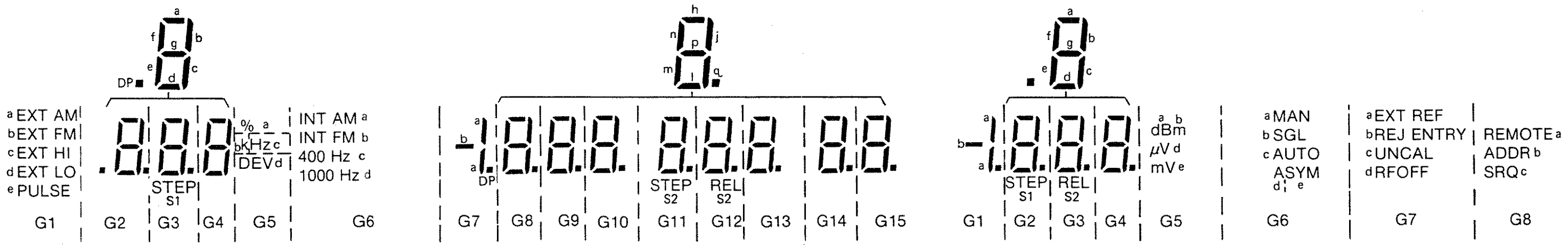

PIN NO	1	2	3	4	5	6	7	8	9	10	11	12	13	14	15	16	17	18	19	20
CONNECTION	F	P_{S1}	P_{DP}	P_d	P_c	P_e	P_g	P_f	P_b	P_a	P_h	P_j	P_n	P_p	P_m	P_n	P_L	P_q	P_{S2}	F

	21	22	23	24	25	26	27	28	29	30	31	32	33	34	35
	G1	G2	G3	G4	G5	G6	G7	G8	G9	G10	G11	G12	G13	G14	G15

NOTES:

F Denotes Filament
G Denotes Grid (numeric suffix identifies display field)
P Denotes Plate (subscript identifies display segment)

PIN NO	1	2	3	4	5	6	7	8	9	10	11	12	13	14	15	16	17	18	19
CONNECTION	F	P_{S1}	P_{DP}	P_c	P_g	P_a	P_b	P_f	P_e	P_d	F	G1	G2	G3	G4	G5	G6	G7	G8

DISPLAY CONNECTION INFORMATION

Figure 7-5. A1A1 Display PCA (cont)

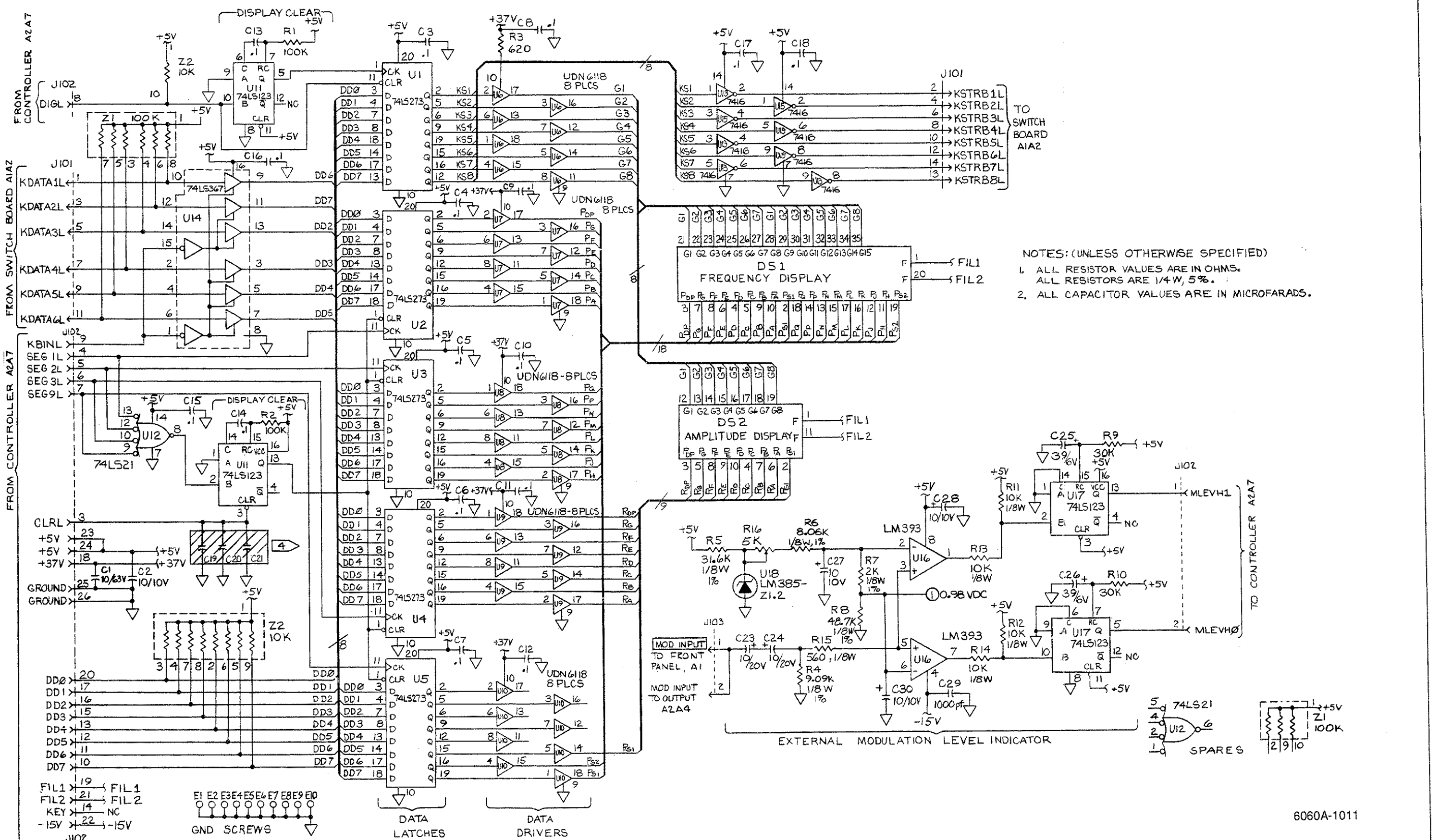

NOTES: (UNLESS OTHERWISE SPECIFIED)

1. ALL RESISTOR VALUES ARE IN OHMS.
   ALL RESISTORS ARE 1/4W, 5%.
2. ALL CAPACITOR VALUES ARE IN MICROFARADS.

6060A-1011

Figure 7-5. A1A1 Display PCA (cont)

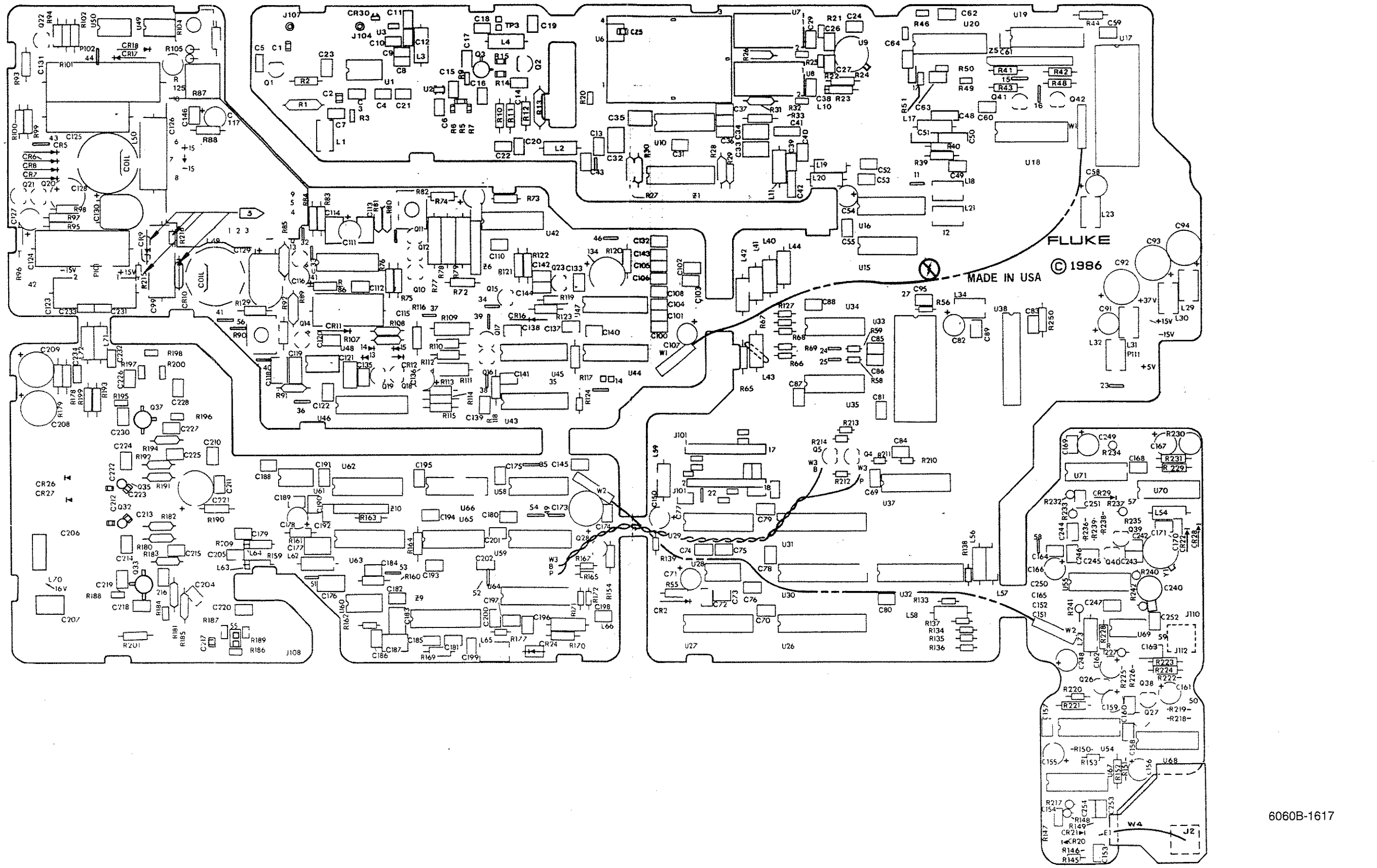

Figure 7-6. A2A1 Synthesizer PCA

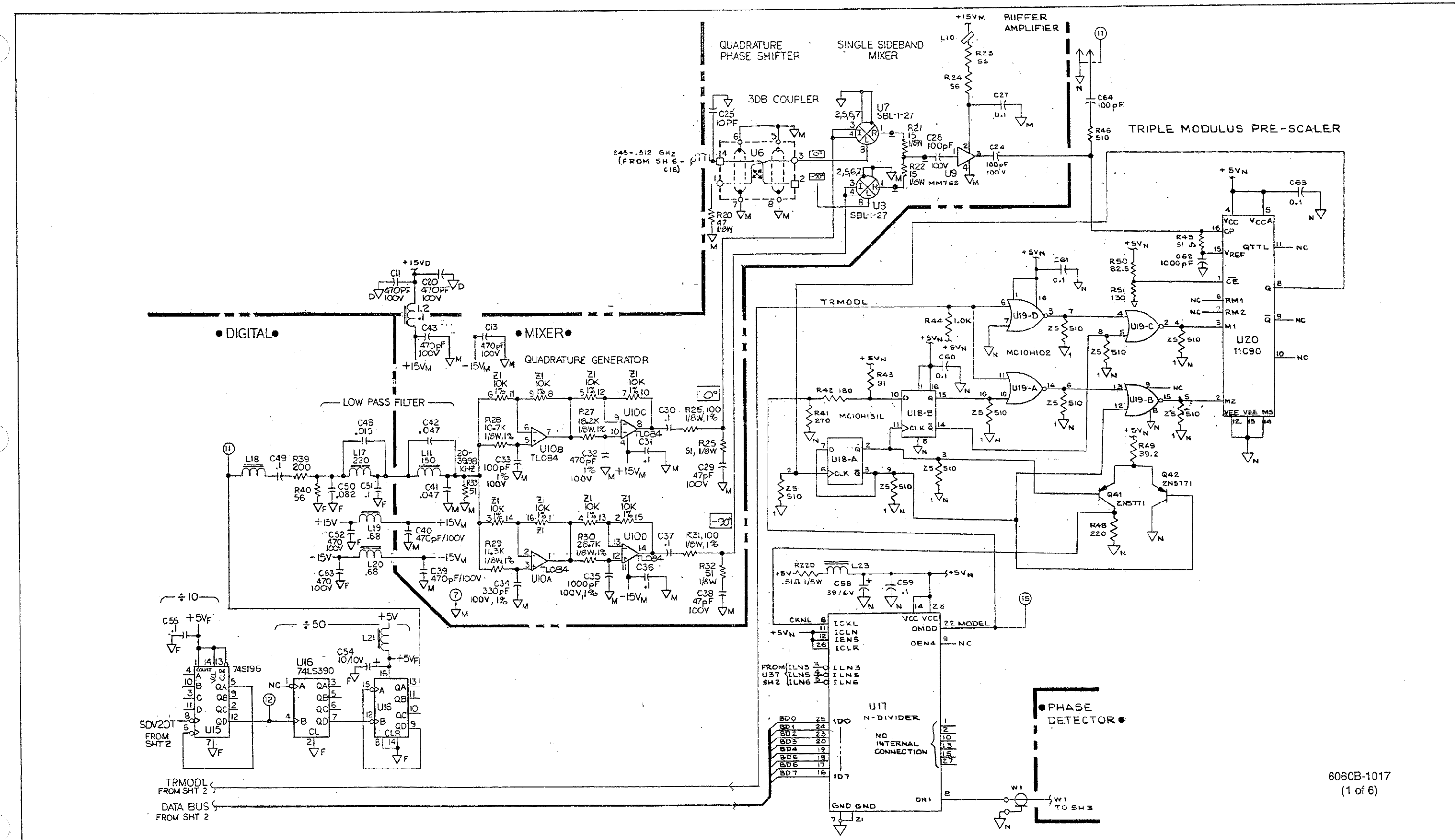

6060B-1017
(1 of 6)

Figure 7-6. A2A1 Synthesizer PCA (cont)

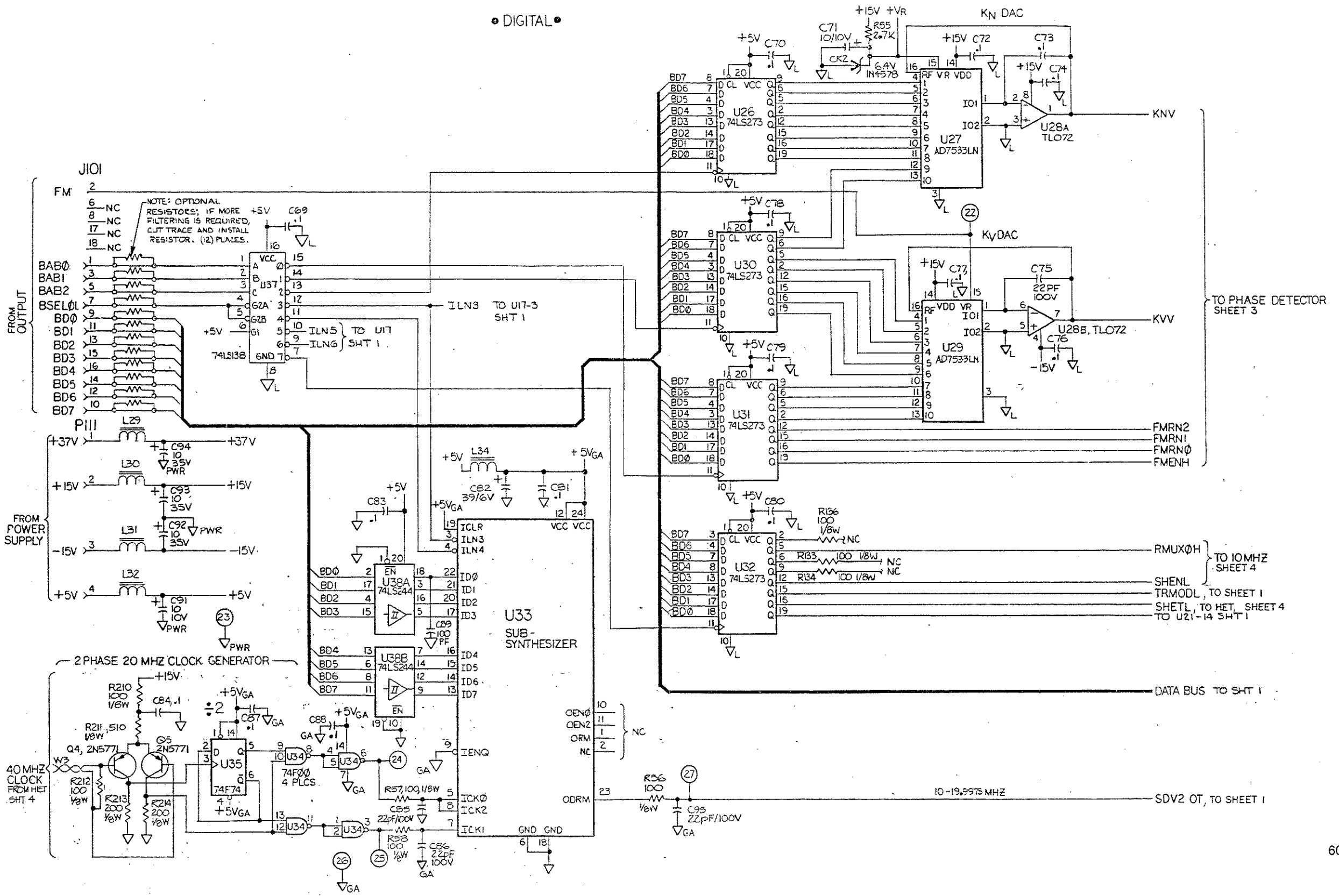

6060B-1017
(2 of 6)

Figure 7-6. A2A1 Synthesizer PCA (cont)

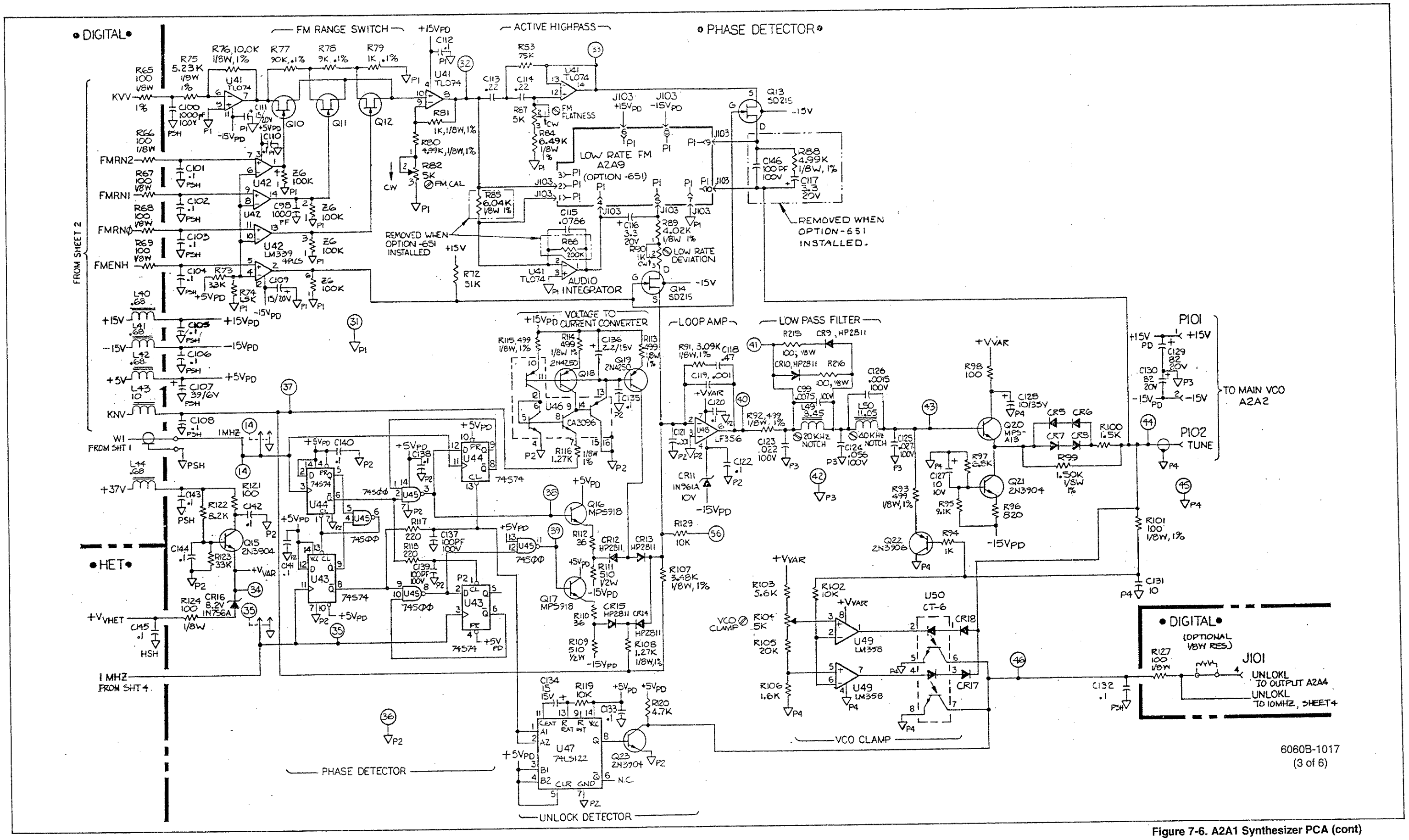

Figure 7-6. A2A1 Synthesizer PCA (cont)

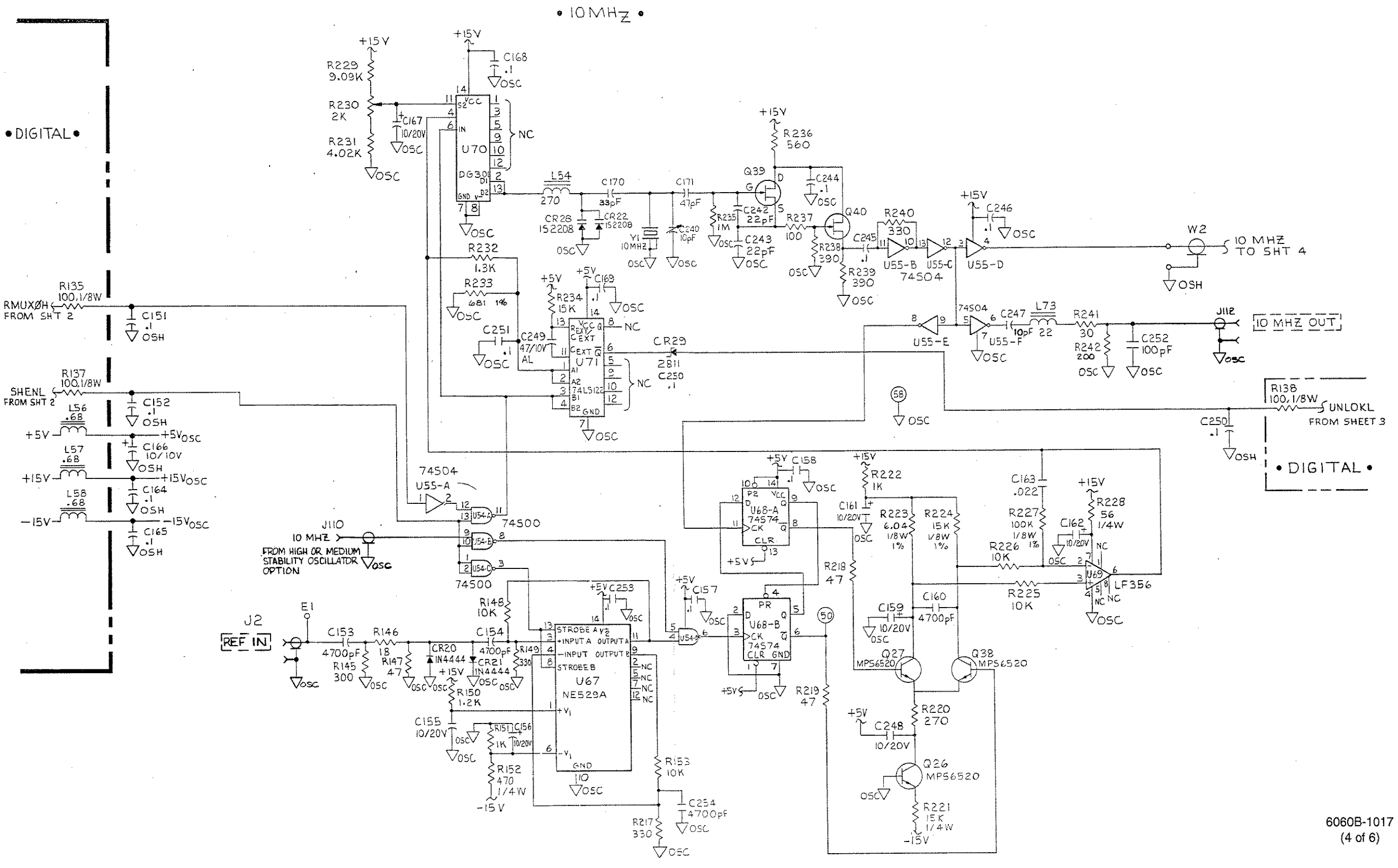

Figure 7-6. A2A1 Synthesizer PCA (cont)

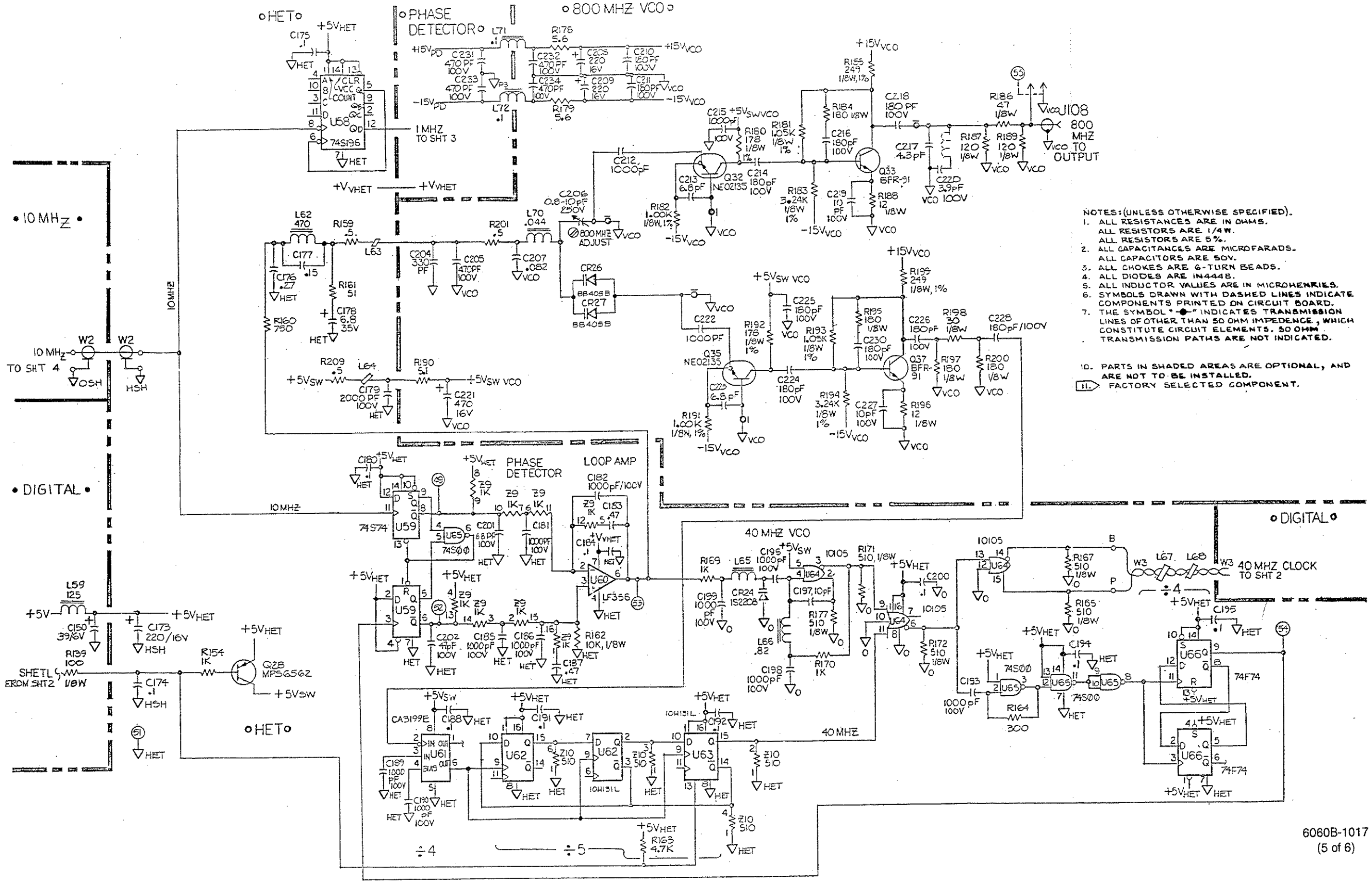

NOTES: (UNLESS OTHERWISE SPECIFIED).
1. ALL RESISTANCES ARE IN OHMS.
   ALL RESISTORS ARE 1/4W.
   ALL RESISTORS ARE 5%.
2. ALL CAPACITANCES ARE MICROFARADS.
   ALL CAPACITORS ARE 50V.
3. ALL CHOKES ARE 6-TURN BEADS.
4. ALL DIODES ARE IN4448.
5. ALL INDUCTOR VALUES ARE IN MICROHENRIES.
6. SYMBOLS DRAWN WITH DASHED LINES INDICATE COMPONENTS PRINTED ON CIRCUIT BOARD.
7. THE SYMBOL "●—●" INDICATES TRANSMISSION LINES OF OTHER THAN 50 OHM IMPEDENCE, WHICH CONSTITUTE CIRCUIT ELEMENTS. 50 OHM TRANSMISSION PATHS ARE NOT INDICATED.

10. PARTS IN SHADED AREAS ARE OPTIONAL, AND ARE NOT TO BE INSTALLED.
11. FACTORY SELECTED COMPONENT.

6060B-1017
(5 of 6)

Figure 7-6. A2A1 Synthesizer PCA (cont)

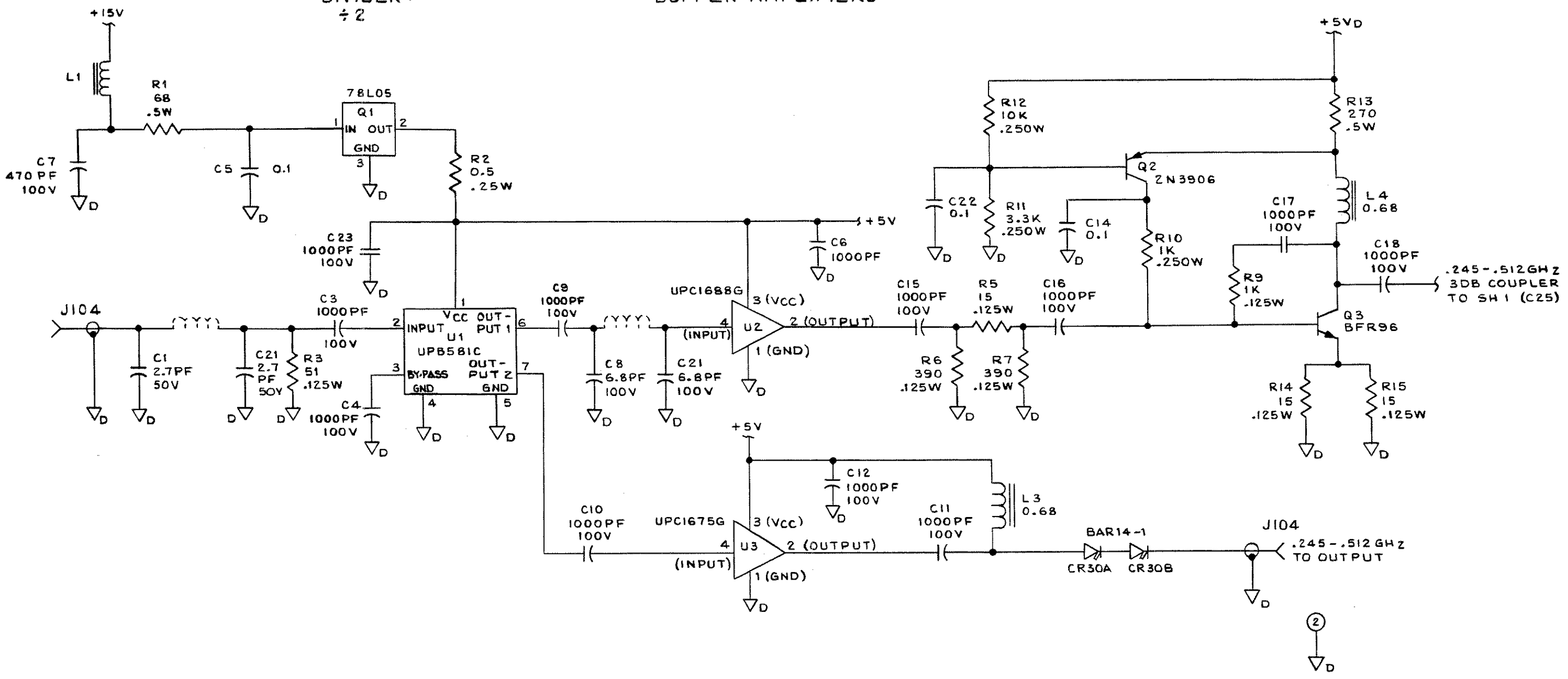

6060B-1017
(6 of 6)

Figure 7-6. A2A1 Synthesizer PCA (cont)

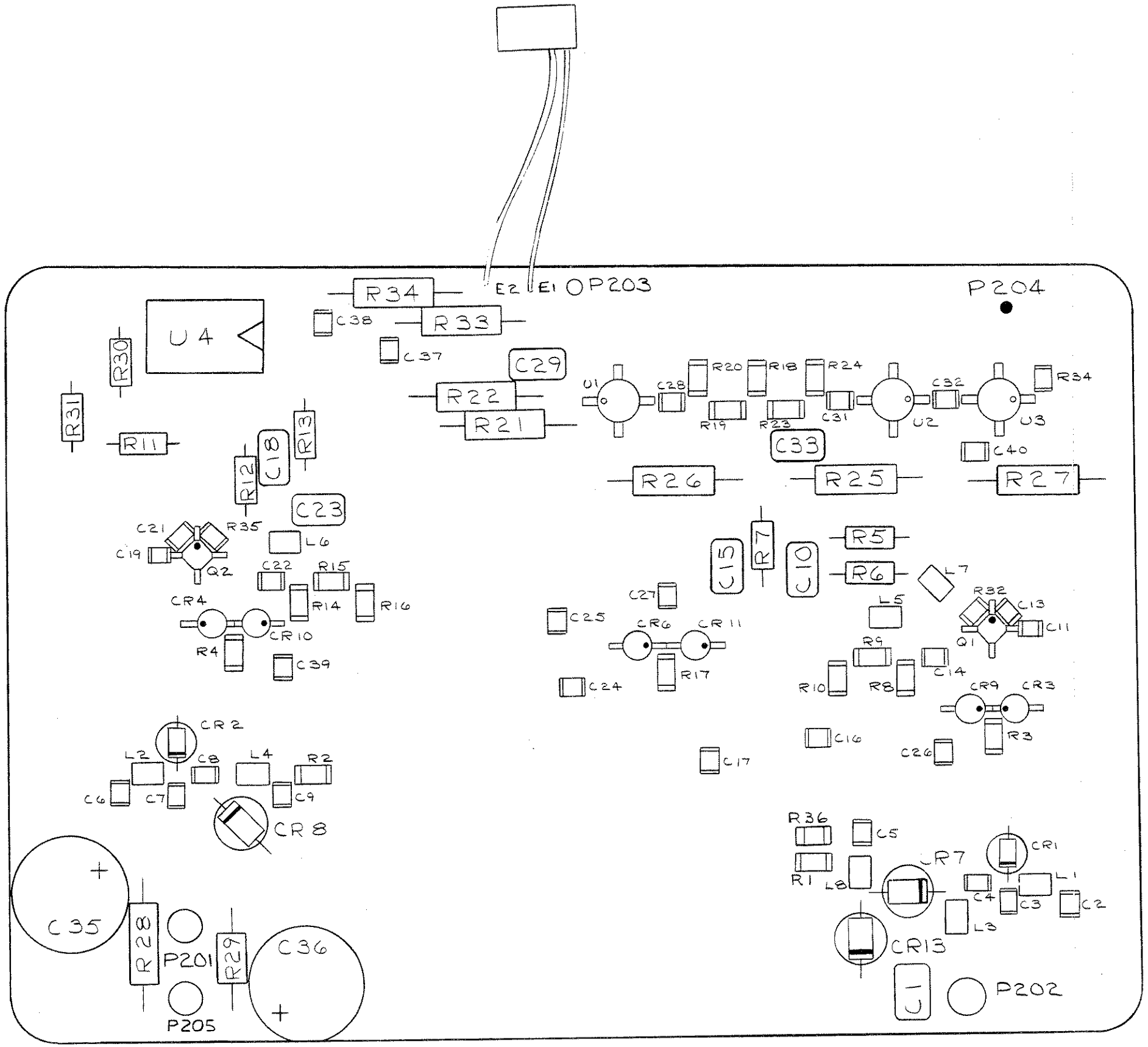

6061A-1616

Figure 7-7. A2A2 VCO PCA

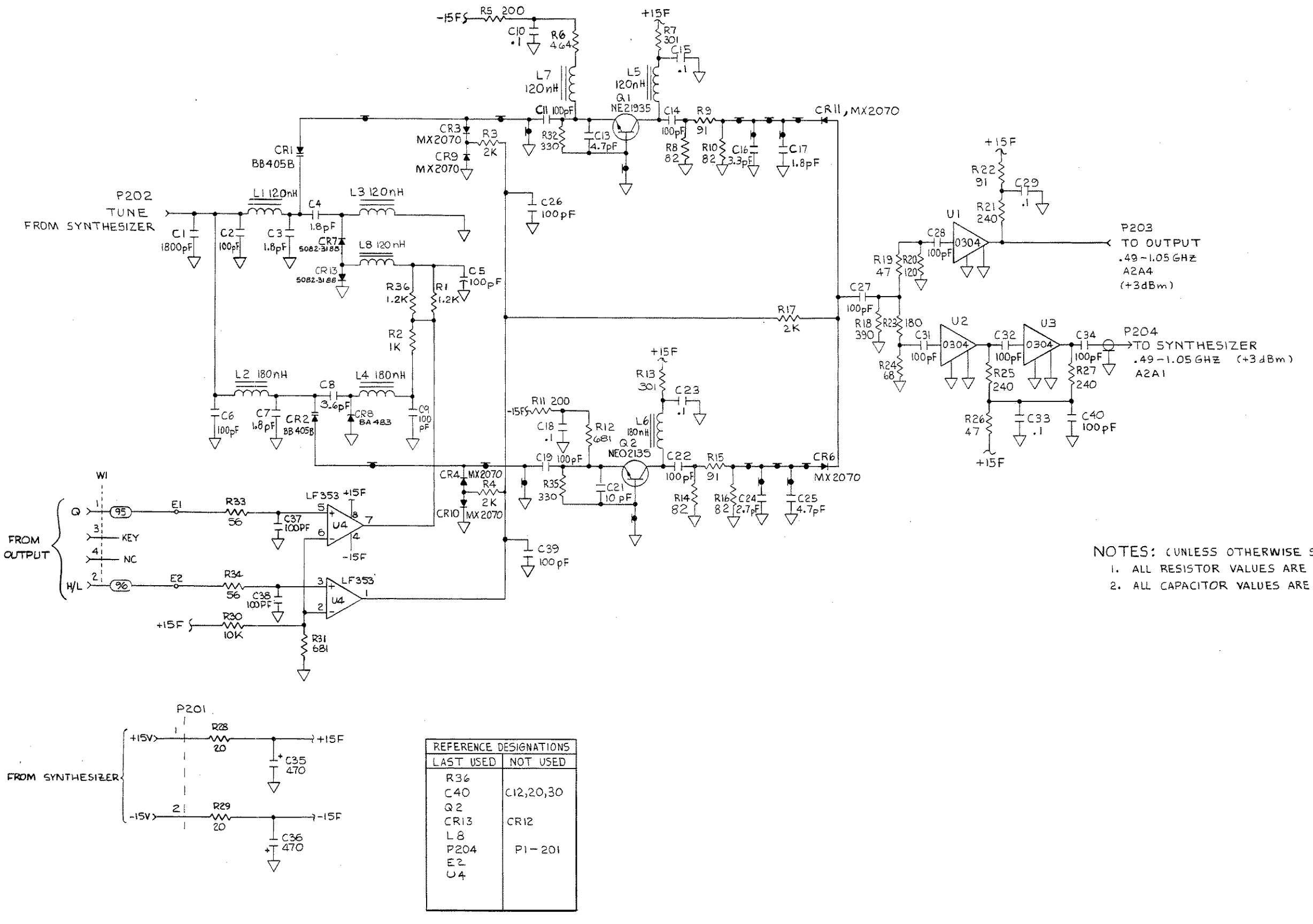

REFERENCE DESIGNATIONS	
LAST USED	NOT USED
R36	
C40	C12,20,30
Q2	
CR13	CR12
L8	
P204	P1-201
E2	
U4	

NOTES: (UNLESS OTHERWISE SPECIFIED)
1. ALL RESISTOR VALUES ARE IN OHMS, 5%
2. ALL CAPACITOR VALUES ARE IN MICROFARADS.

6061A-1016

Figure 7-7. A2A2 VCO PCA (cont)

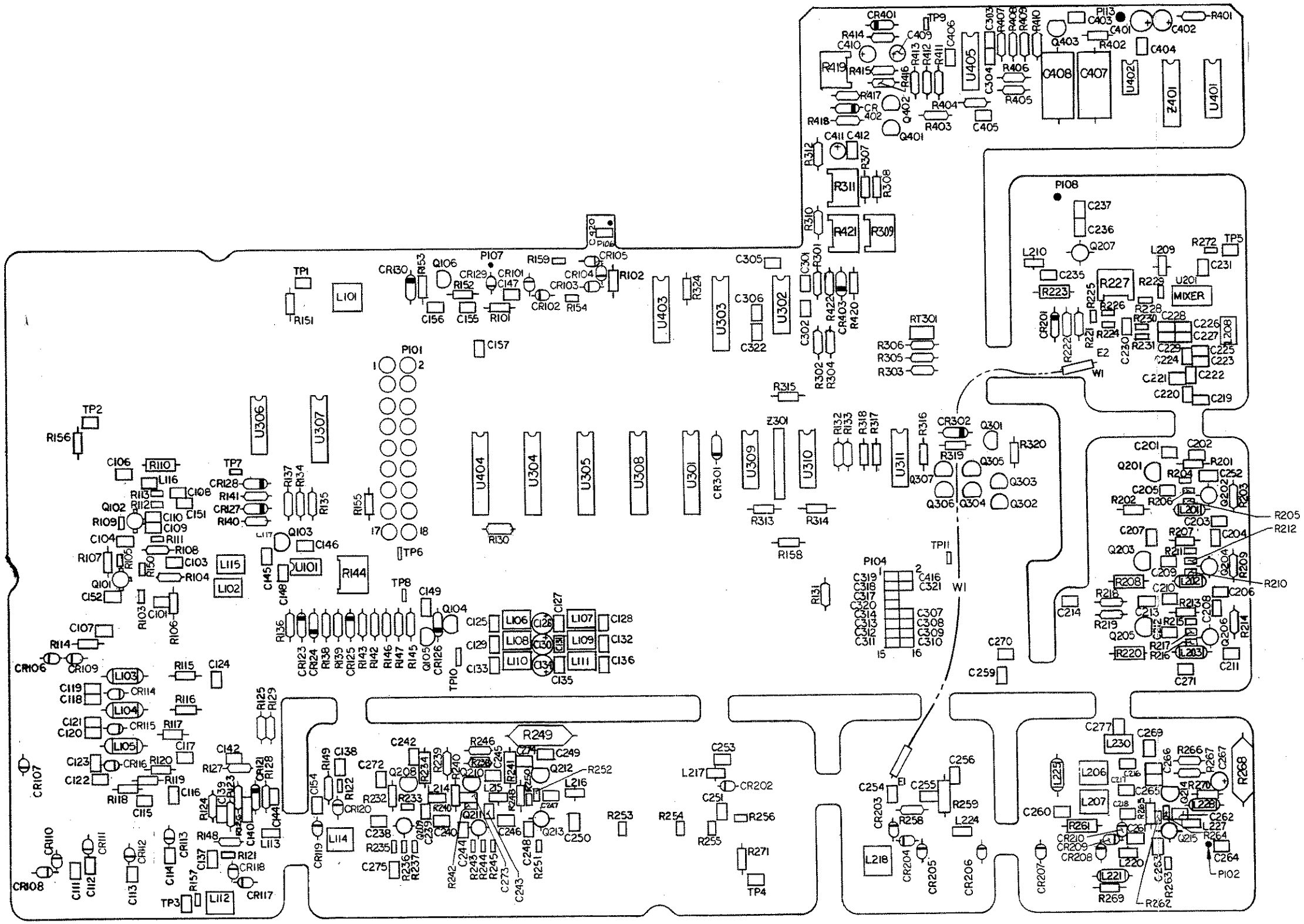

Figure 7-8. A2A4 Output PCA

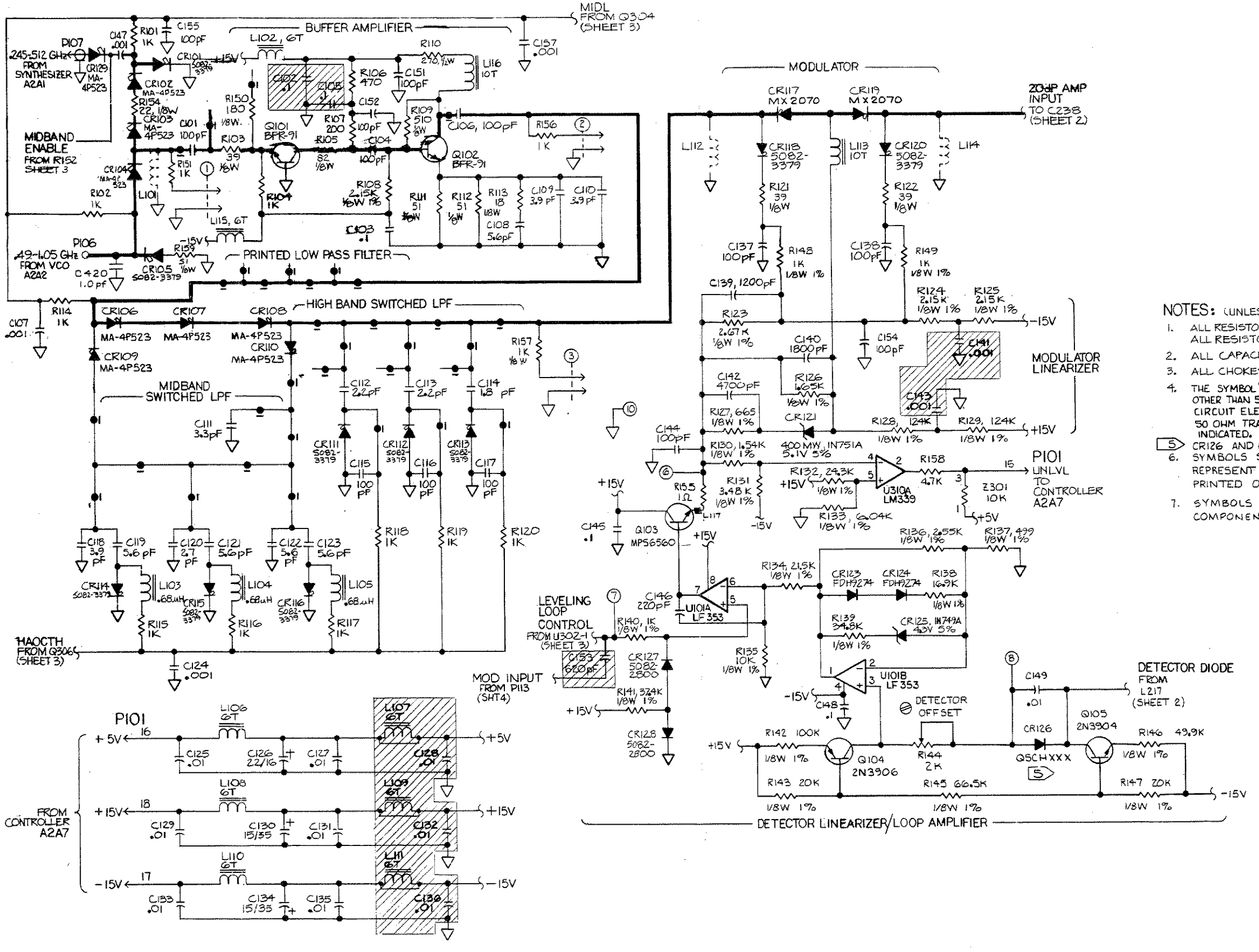

NOTES: (UNLESS OTHERWISE SPECIFIED)

1. ALL RESISTOR VALUES ARE IN OHMS. ALL RESISTORS ARE 1/4W, 5%.
2. ALL CAPACITOR VALUES ARE IN MICROFARADS.
3. ALL CHOKES ARE 10 TURN BEADS.
4. THE SYMBOL "⏚" INDICATES TRANSMISSION LINES OF OTHER THAN 50 OHM IMPEDANCE WHICH CONSTITUTE CIRCUIT ELEMENTS. 50 OHM TRANSMISSION PATHS ARE NOT INDICATED.
5. CR126 AND CR202 ARE A MATCHED PAIR.
6. SYMBOLS SHOWN IN DOTTED LINES REPRESENT COMPONENTS WHICH ARE PRINTED ON THE CIRCUIT BOARD.
7. SYMBOLS SHOWN IN ▨ ARE OPTIONAL COMPONENTS AND ARE NOT TO BE INSTALLED.

6060A-1024
(1 of 4)

Figure 7-8. A2A4 Output PCA (cont)

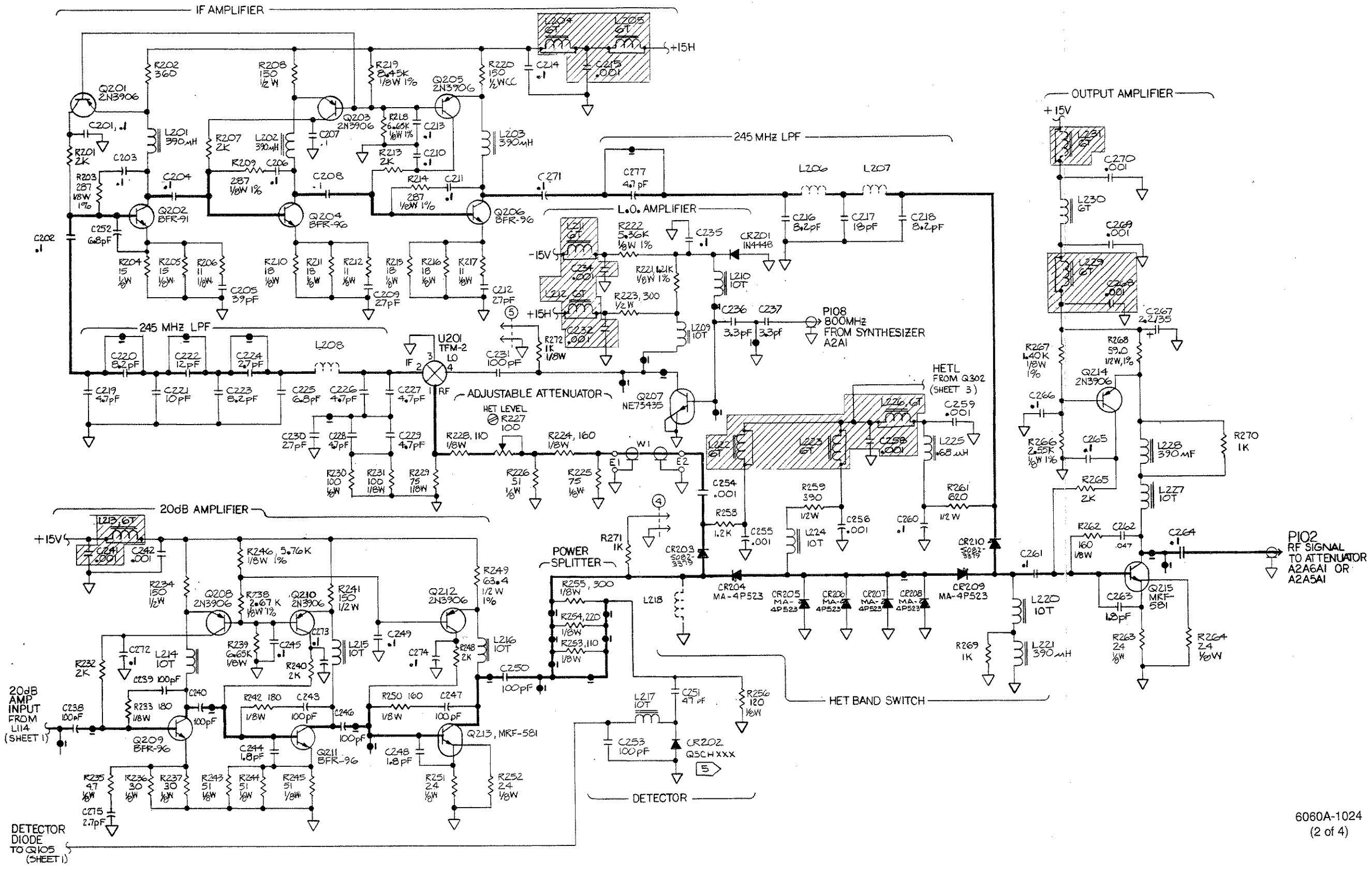

Figure 7-8. A2A4 Output PCA (cont)

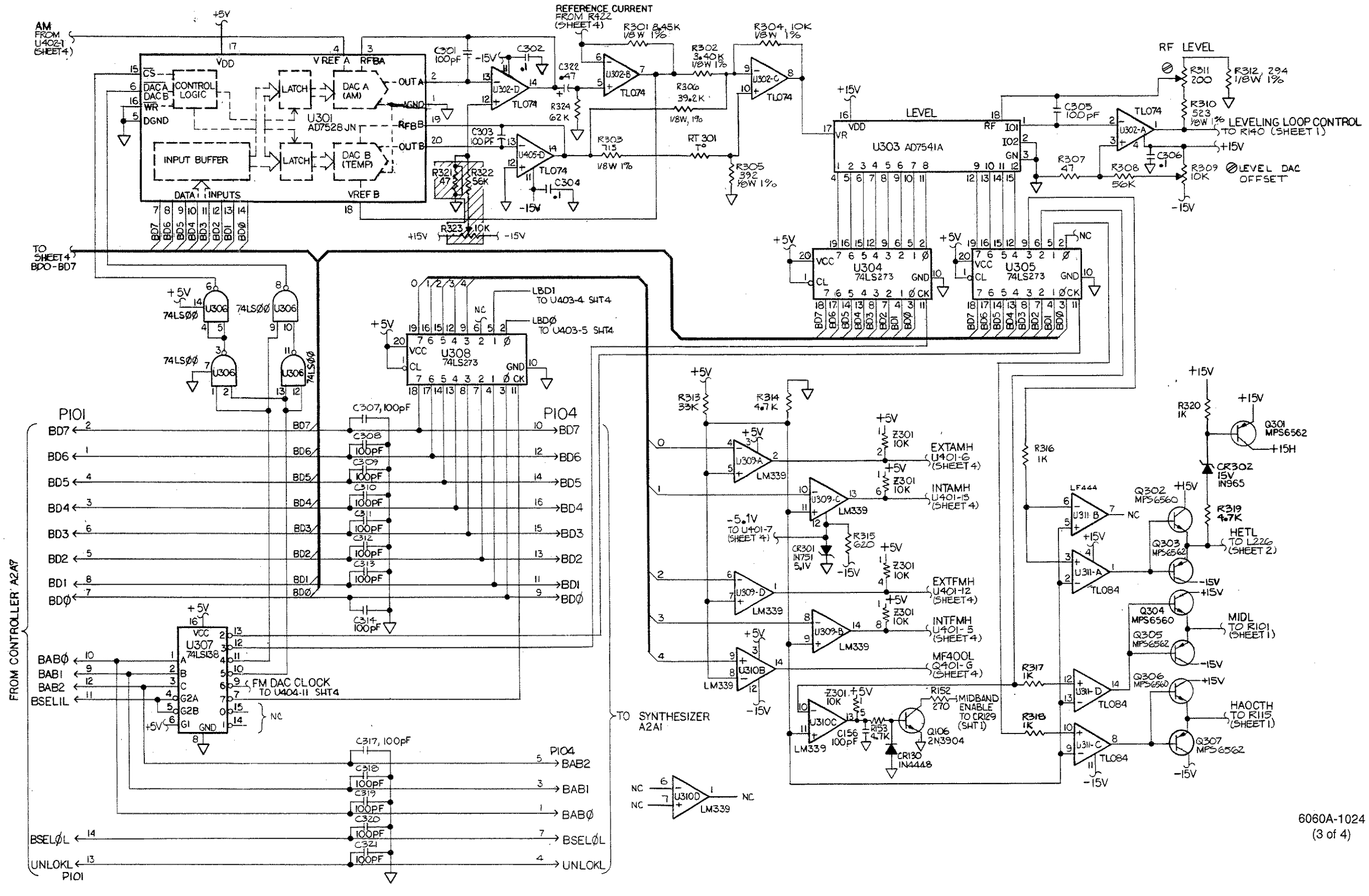

Figure 7-8. A2A4 Output PCA (cont)

REFERENCE DESIGNATIONS.	
LAST USED	NOT USED
C416	C1-100, C150, C158-C200, C233, C257, 276 C278, Z79, Z81-300, C315, C316, C323-400.
CR403	CR1-100, CR122, CR131-200, CR211-300, CR303-400.
L231 L117	L1-100, L118-200, L219.
Q403	Q1-100, Q107-200, Q216-300, Q308-400.
R422	R1-100, R160-200, R247, R257, R260, R273-300, R325-400.
RT301	RT1-300
U405	U1-100, U102-200, U202-300, U312-400.
Z401	Z1-300, Z302-400.
P113	P1-100, P103, P105, P109-112.
TP11	——
W1	——

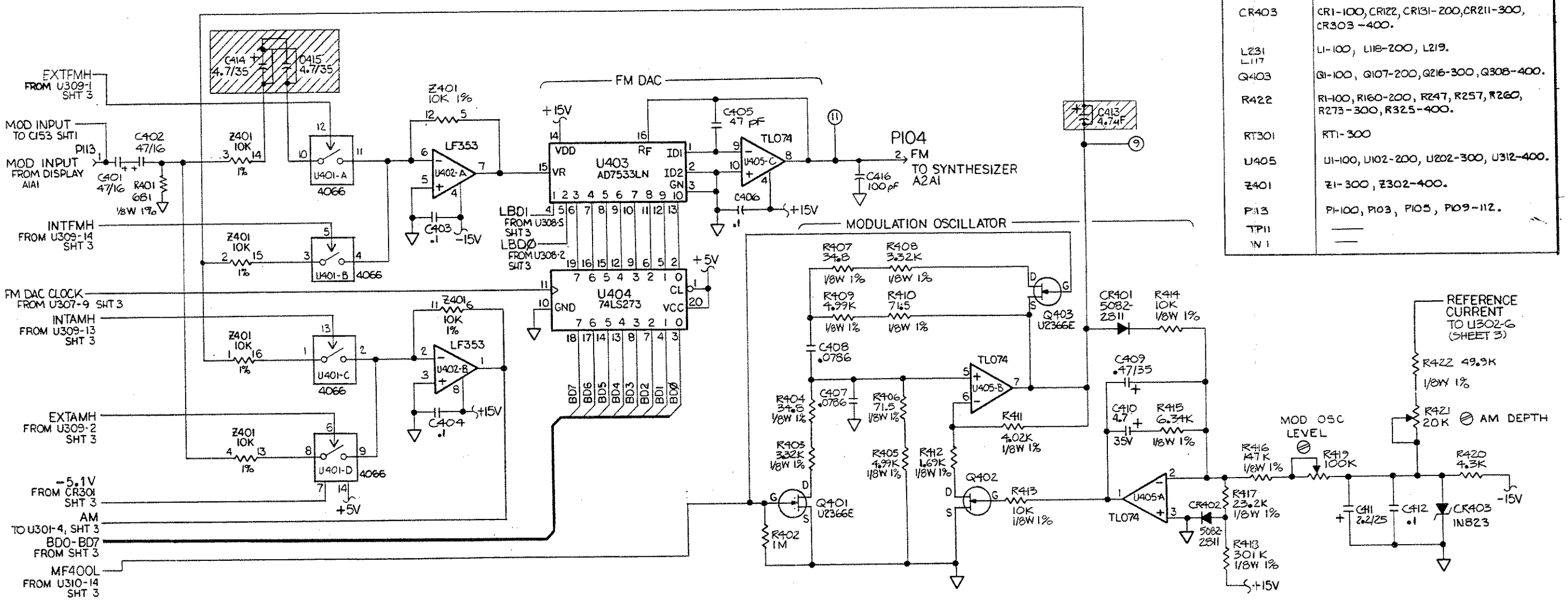

6060A-1024
(4 of 4)

Figure 7-8. A2A4 Output PCA (cont)

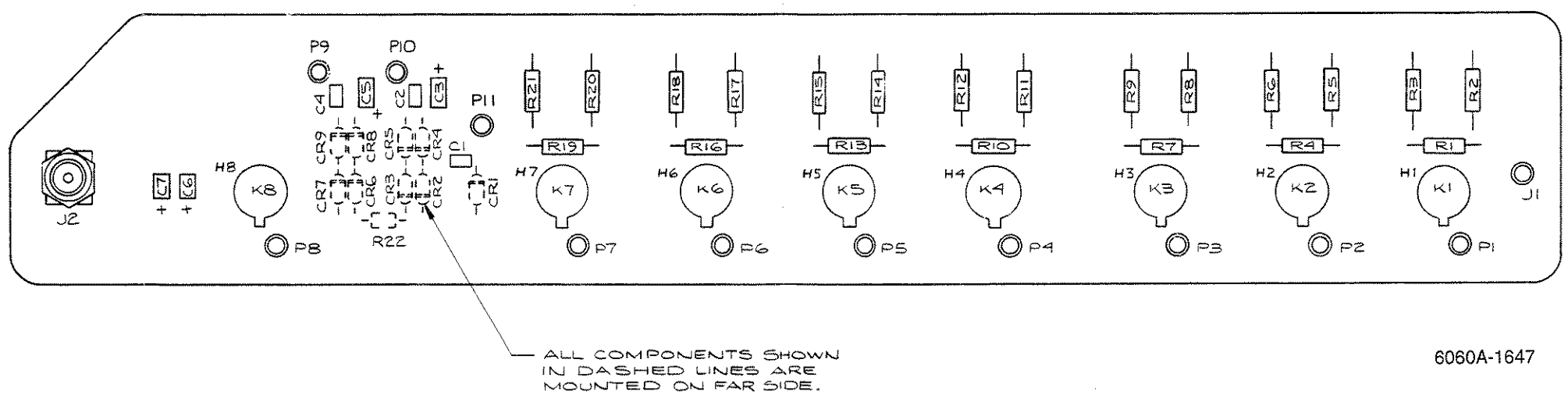

6060A-1647

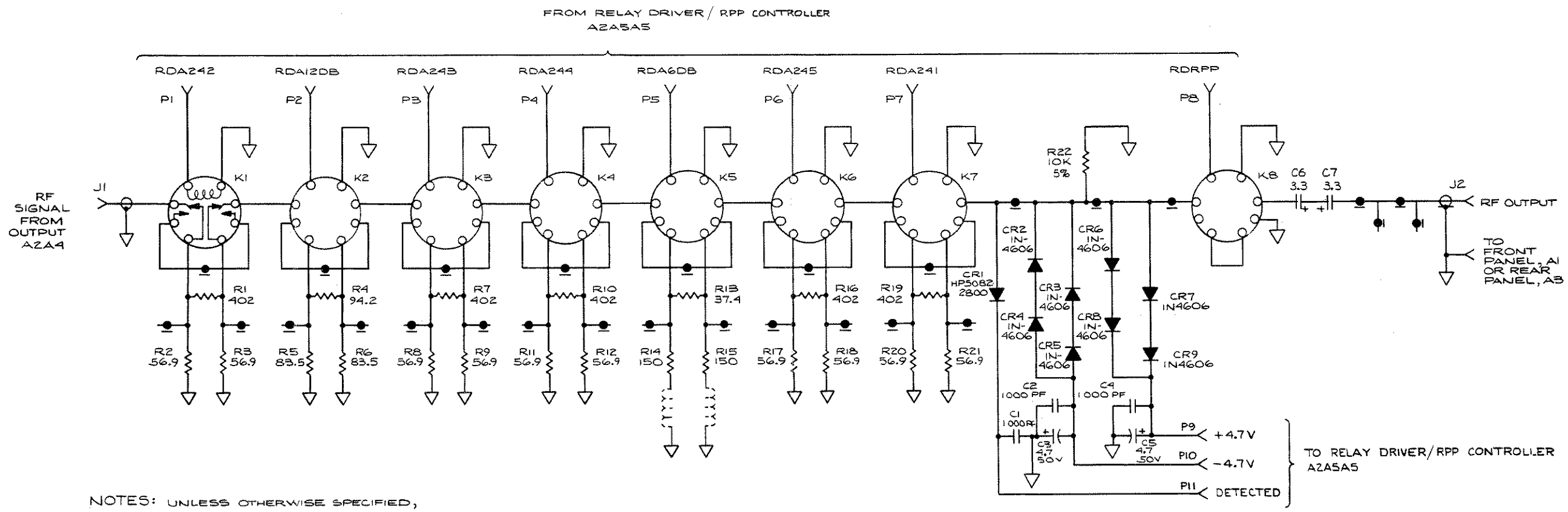

NOTES: UNLESS OTHERWISE SPECIFIED,

1. ALL RESISTANCES ARE IN OHMS. ALL RESISTORS ARE 1/8 W, 0.5%.
2. ALL CAPACITANCES ARE IN MICROFARADS.
3. SYMBOLS DRAWN WITH DASHED LINES INDICATE COMPONENTS PRINTED ON CIRCUIT BOARD.
4. THE SYMBOL ⏚ INDICATES TRANSMISSION LINES OF OTHER THAN 50 OHM IMPEDANCE WHICH CONSTITUTE CIRCUIT ELEMENTS. 50 OHM TRANSMISSION PATHS ARE NOT INDICATED.

REFERENCE DESIGNATIONS	
HIGHEST	NOT USED
P11 K8 R22 C7 CR9 J2	

6060A-1047

Figure 7-9. A2A5A4 Attenuator/RPP PCA

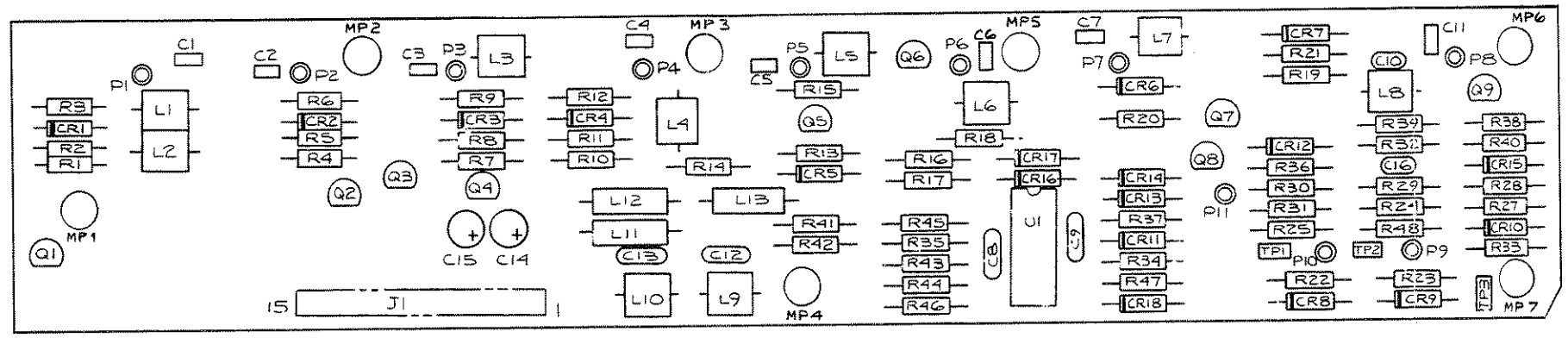

6060A-1645

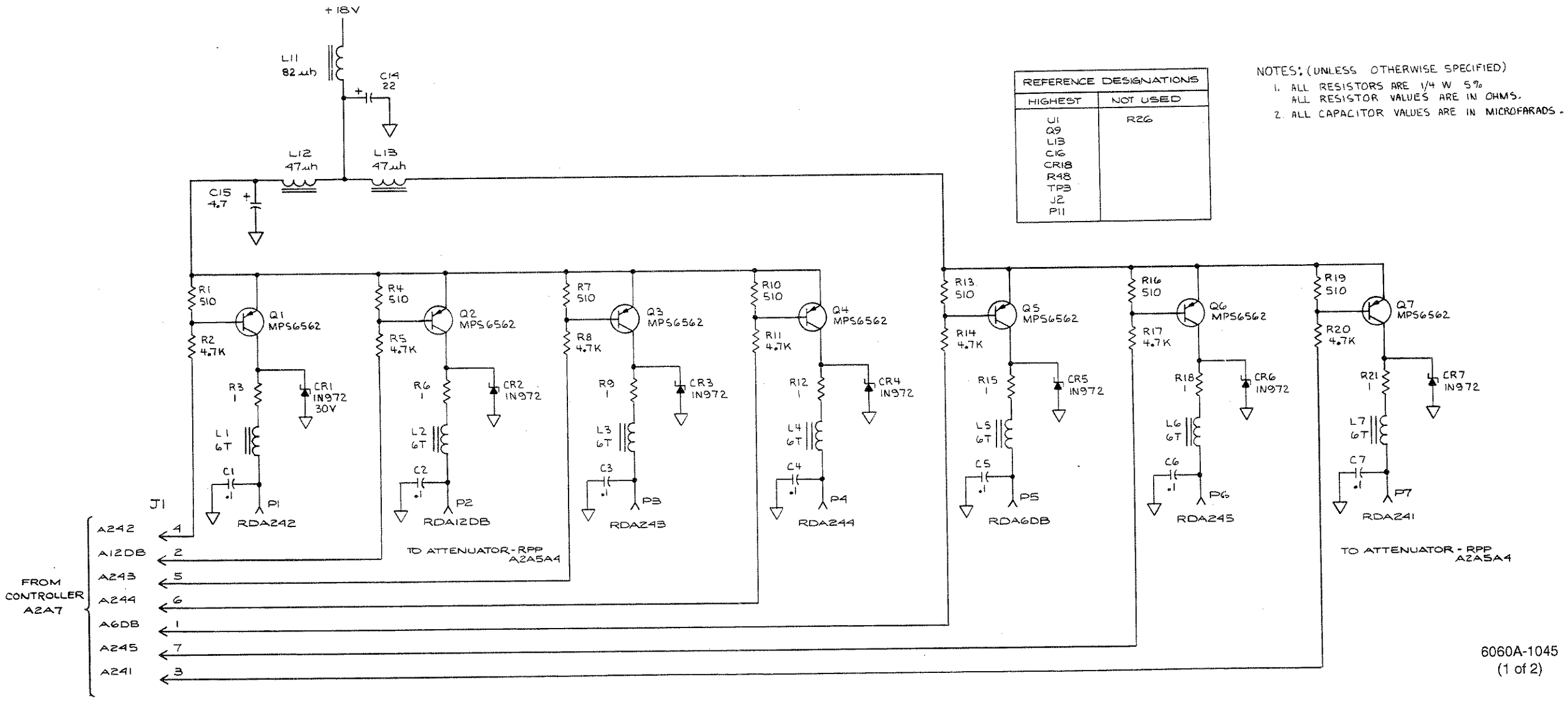

REFERENCE DESIGNATIONS	
HIGHEST	NOT USED
U1 Q9 L13 C16 CR18 R48 TP3 J2 P11	R26

NOTES: (UNLESS OTHERWISE SPECIFIED)
1. ALL RESISTORS ARE 1/4 W 5%
   ALL RESISTOR VALUES ARE IN OHMS.
2. ALL CAPACITOR VALUES ARE IN MICROFARADS.

6060A-1045
(1 of 2)

Figure 7-10. A2A5A5 Relay Driver/RPP PCA

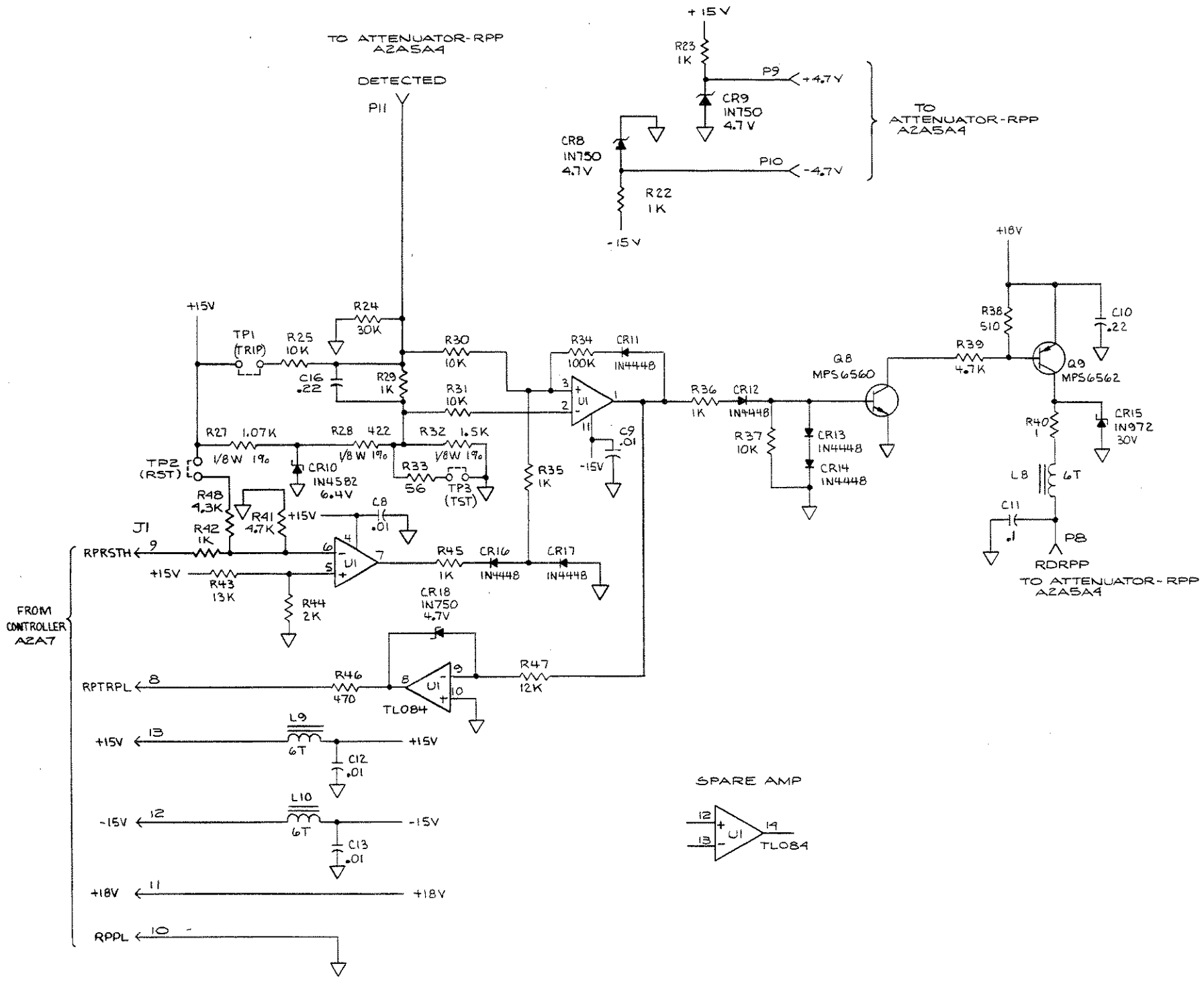

6060A-1045
(2 of 2)

Figure 7-10. A2A5A5 Relay Driver/RPP PCA (cont)

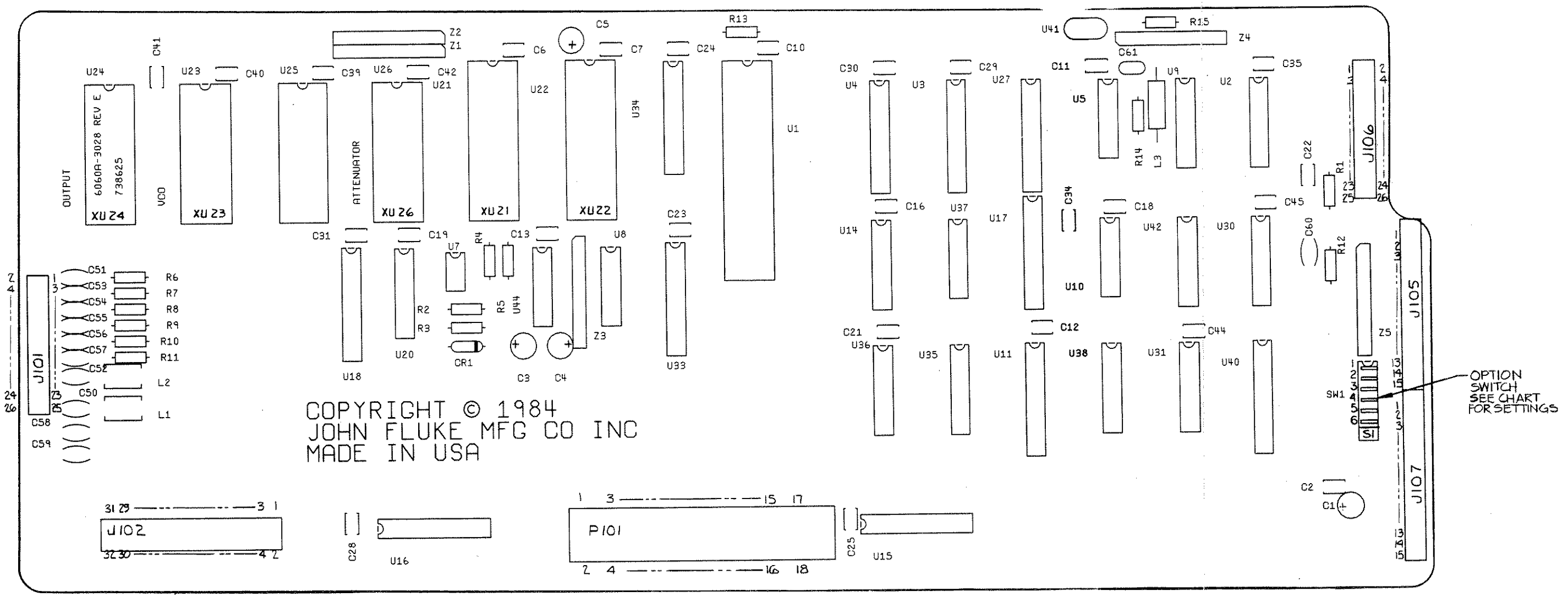

OPTION SWITCH SETTINGS (S1)

SWITCH SECTION IN "ON" POSITION	OPTION INSTALLED
2	MEDIUM STABILITY REFERENCE OPTION-132
4	REAR OUTPUT OPTION-830

ALL OTHER SWITCH SECTIONS SHALL BE IN "OFF" POSITION

6060A-1628

Figure 7-11. A2A7 Controller PCA

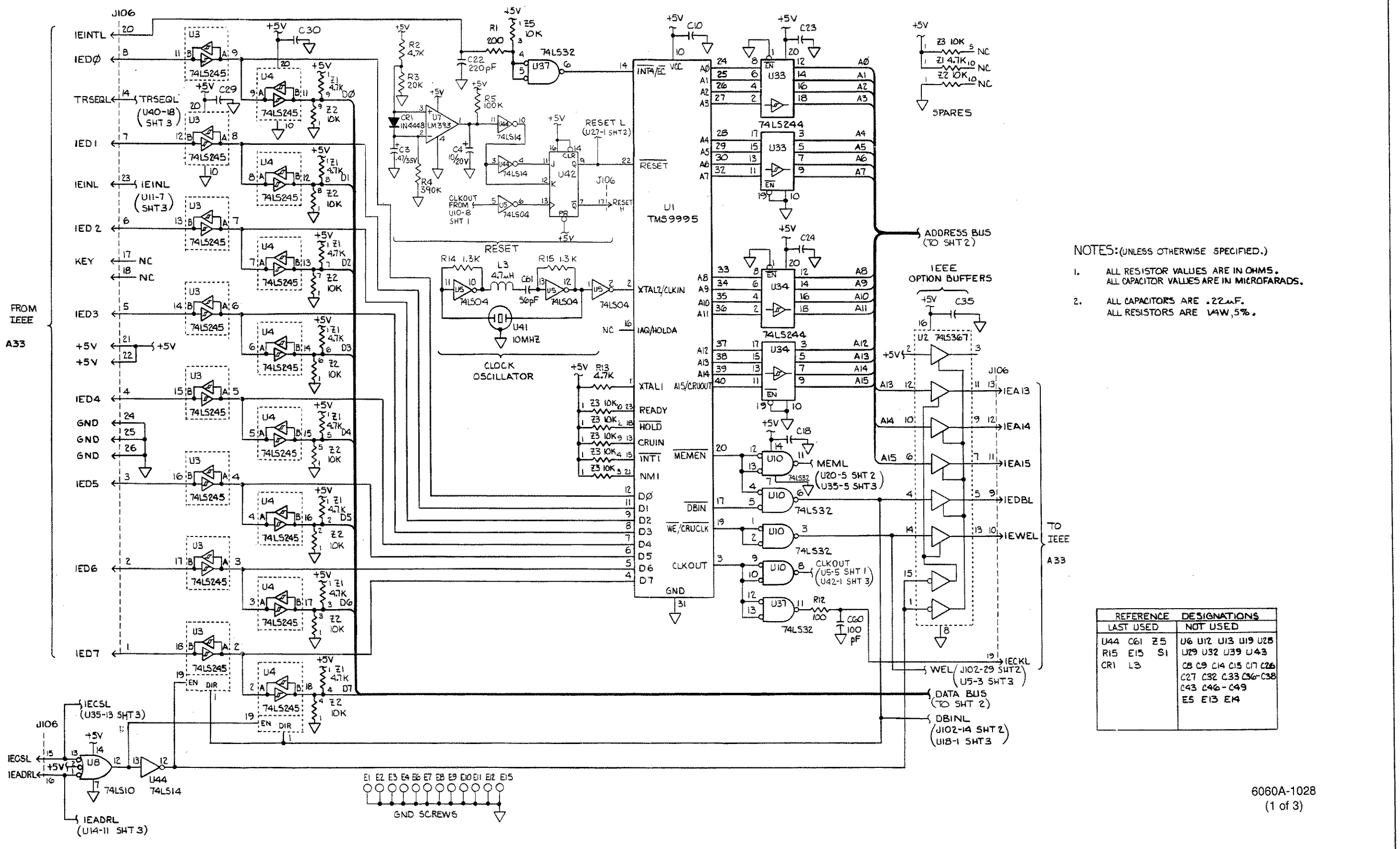

NOTES: (UNLESS OTHERWISE SPECIFIED.)

1. ALL RESISTOR VALUES ARE IN OHMS.
   ALL CAPACITOR VALUES ARE IN MICROFARADS.
2. ALL CAPACITORS ARE .22uF.
   ALL RESISTORS ARE 1/4W, 5%.

REFERENCE DESIGNATIONS	
LAST USED	NOT USED
U44 C61 Z5 R15 E15 S1 CR1 L3	U6 U12 U13 U19 U28 U29 U32 U39 U43 C8 C9 C14 C15 C17 C26 C27 C32 C33 C36-C38 C43 C46-C49 E5 E13 E14

6060A-1028
(1 of 3)

Figure 7-11. A2A7 Controller PCA (cont)

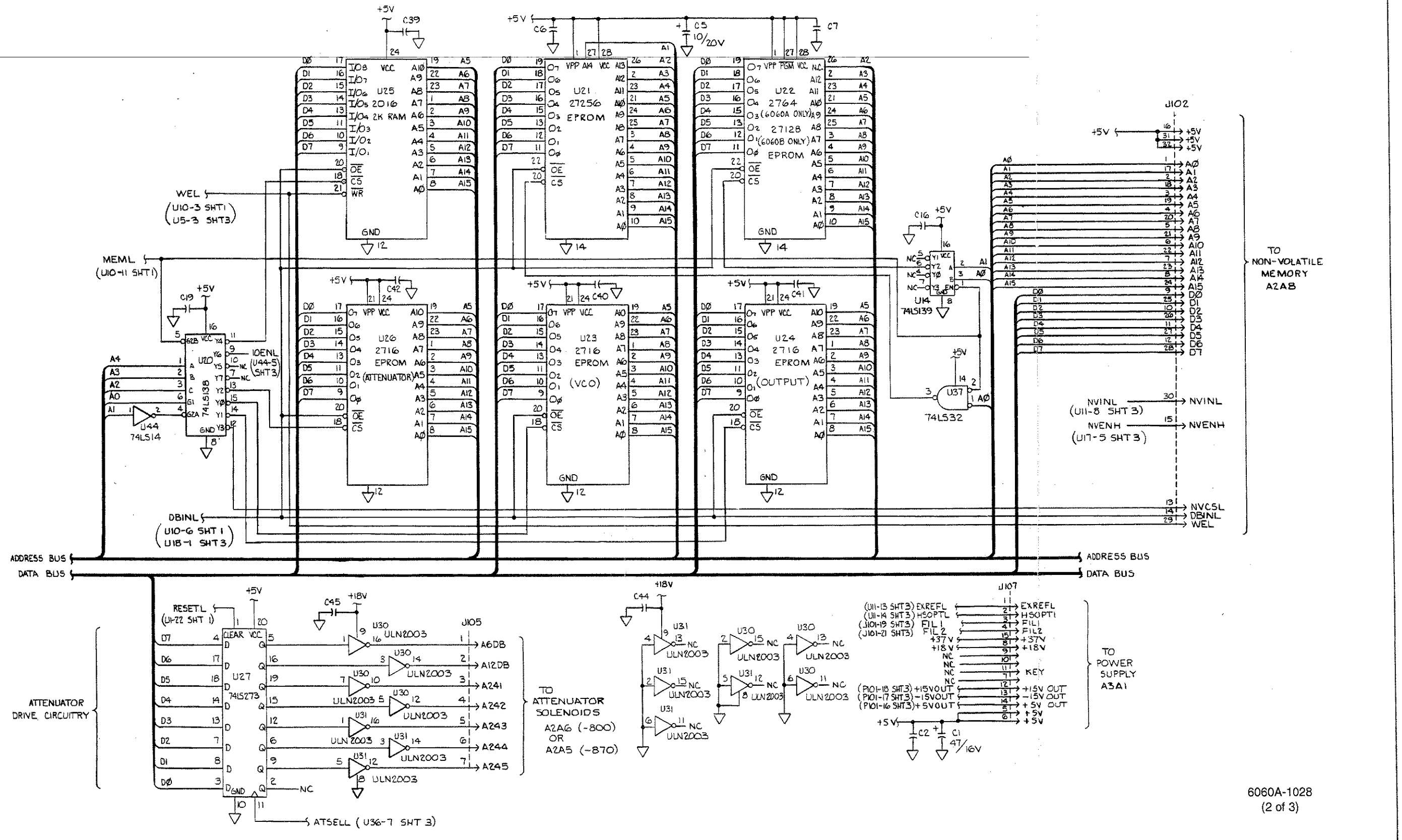

6060A-1028
(2 of 3)

Figure 7-11. A2A7 Controller PCA (cont)

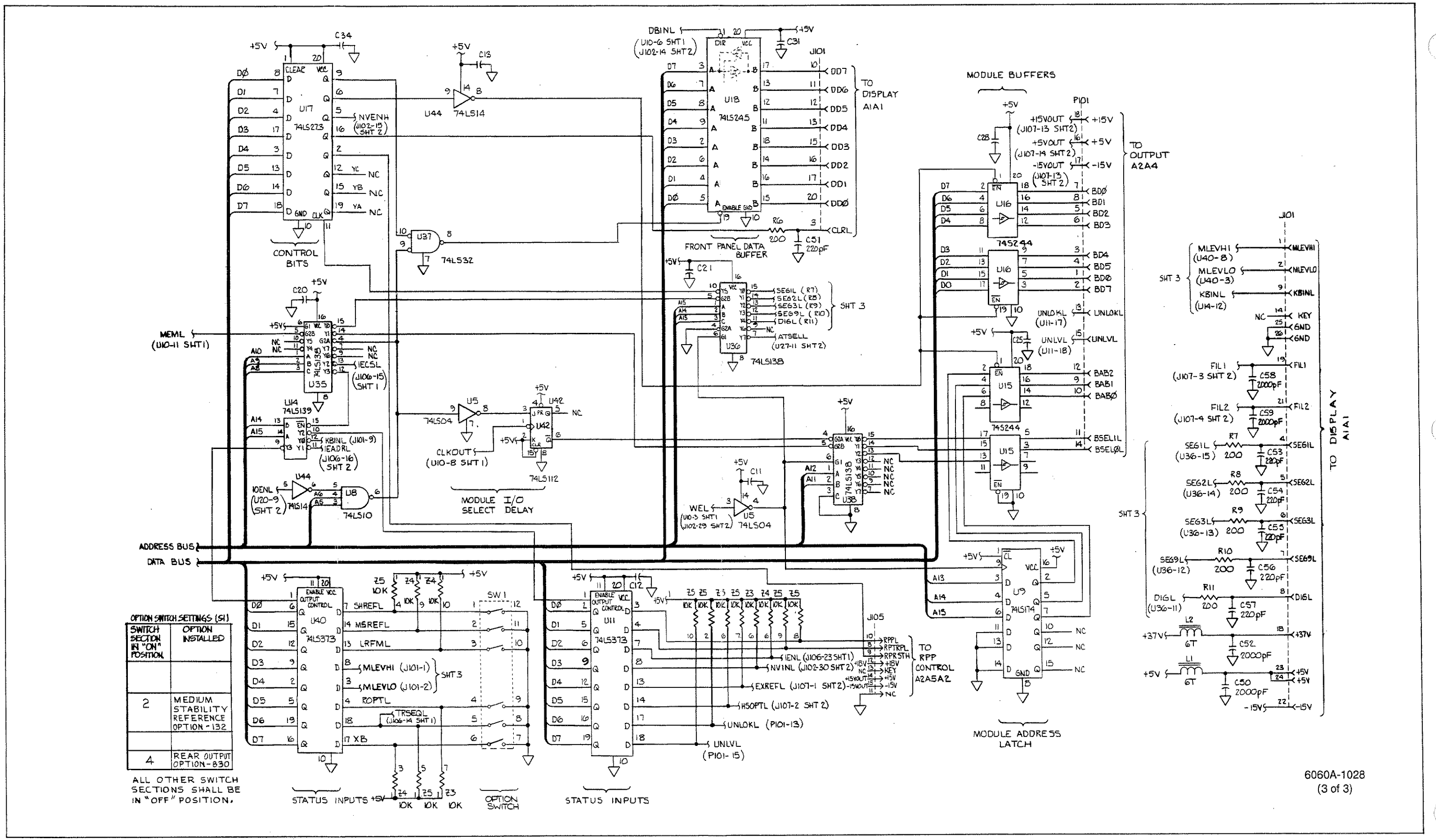

OPTION SWITCH SETTINGS (S1)

SWITCH SECTION IN "ON" POSITION	OPTION INSTALLED
2	MEDIUM STABILITY REFERENCE OPTION -132
4	REAR OUTPUT OPTION-830

ALL OTHER SWITCH SECTIONS SHALL BE IN "OFF" POSITION.

Figure 7-11. A2A7 Controller PCA (cont)

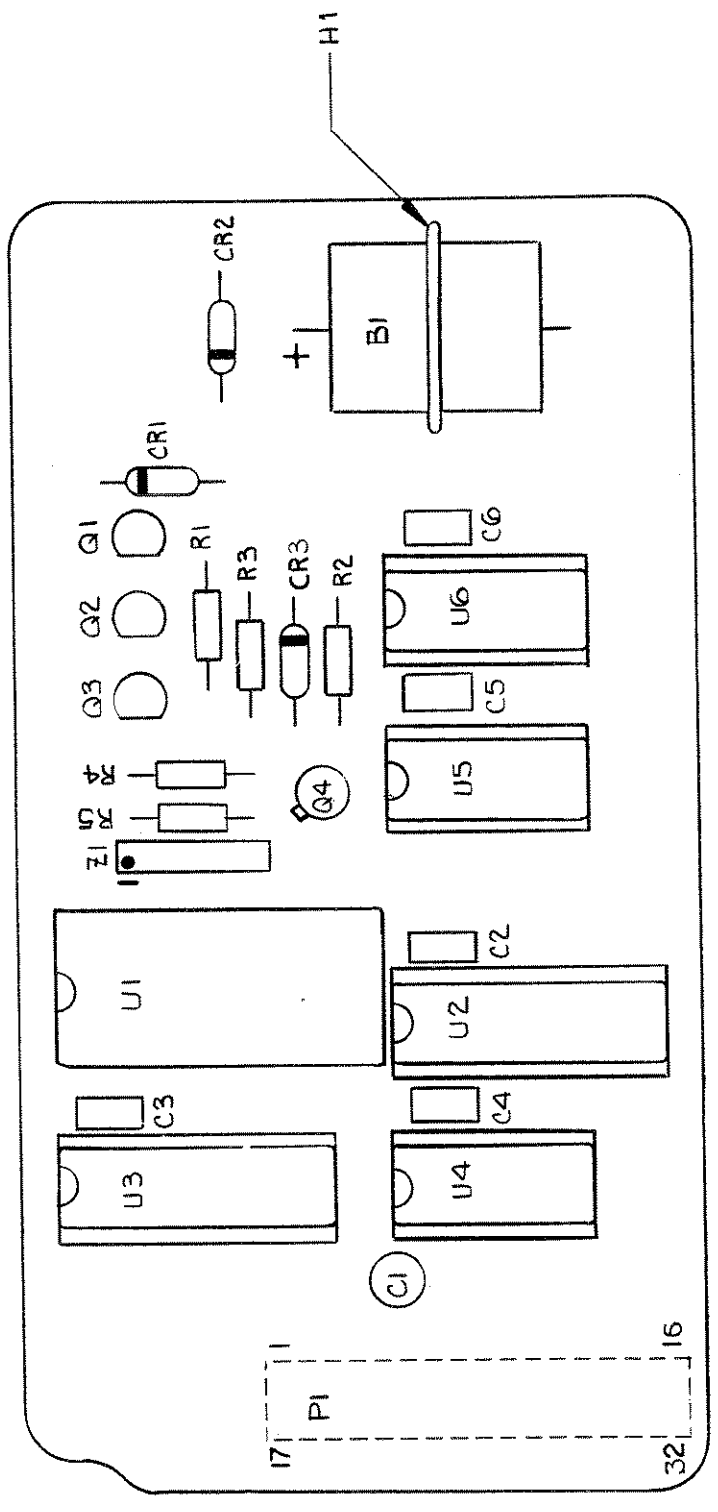

6060A-1629

NOTES: (UNLESS OTHERWISE SPECIFIED).
1. ALL RESISTORS ARE 1/4W, 5%. ALL RESISTOR VALUES ARE IN OHMS.
2. ALL CAPACITOR VALUES ARE IN MICROFARADS.

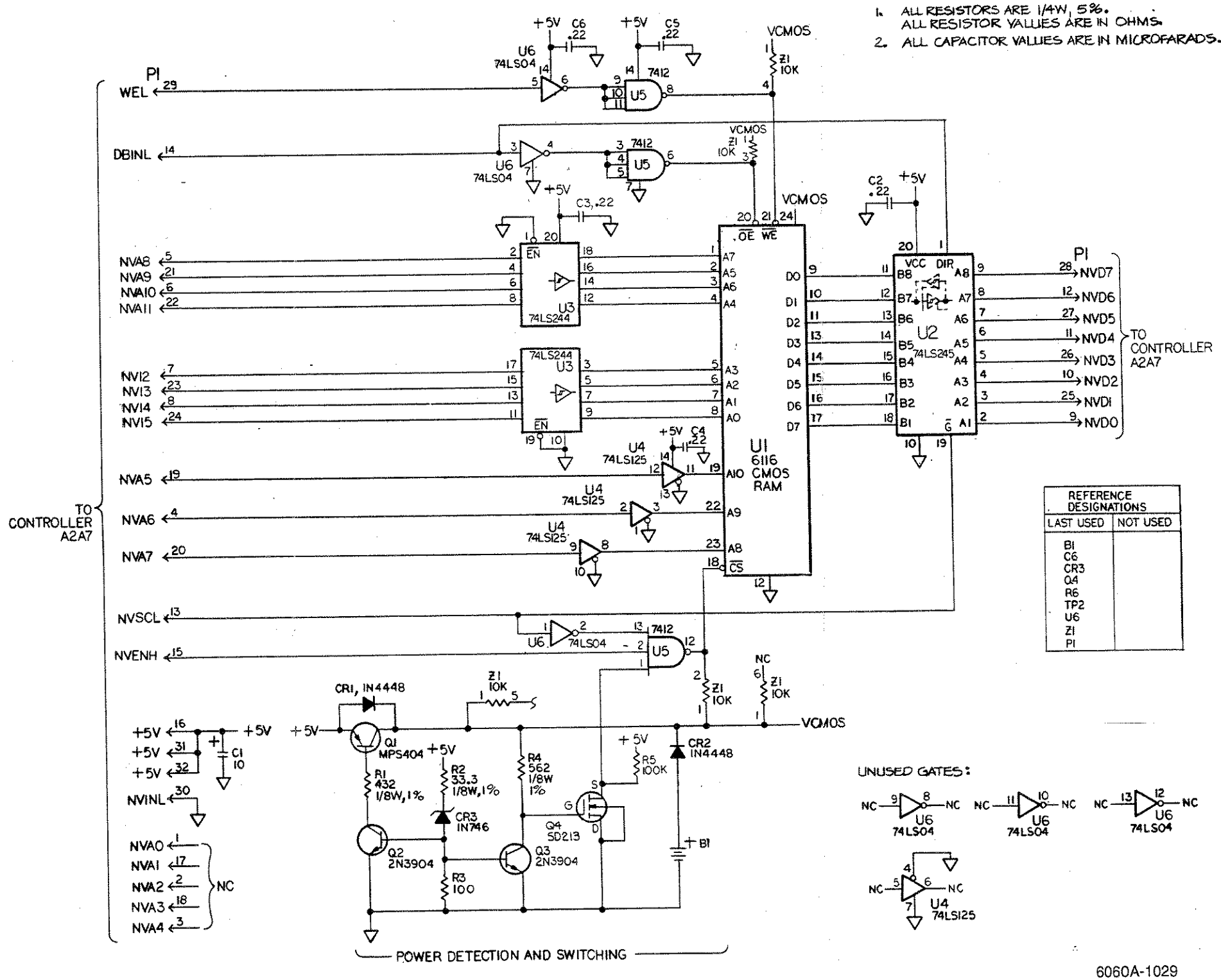

REFERENCE DESIGNATIONS	
LAST USED	NOT USED
B1	
C6	
CR3	
Q4	
R6	
TP2	
U6	
Z1	
P1	

6060A-1029

Figure 7-12. A2A8 Non-Volatitle (Store/Recall) Memory PCA

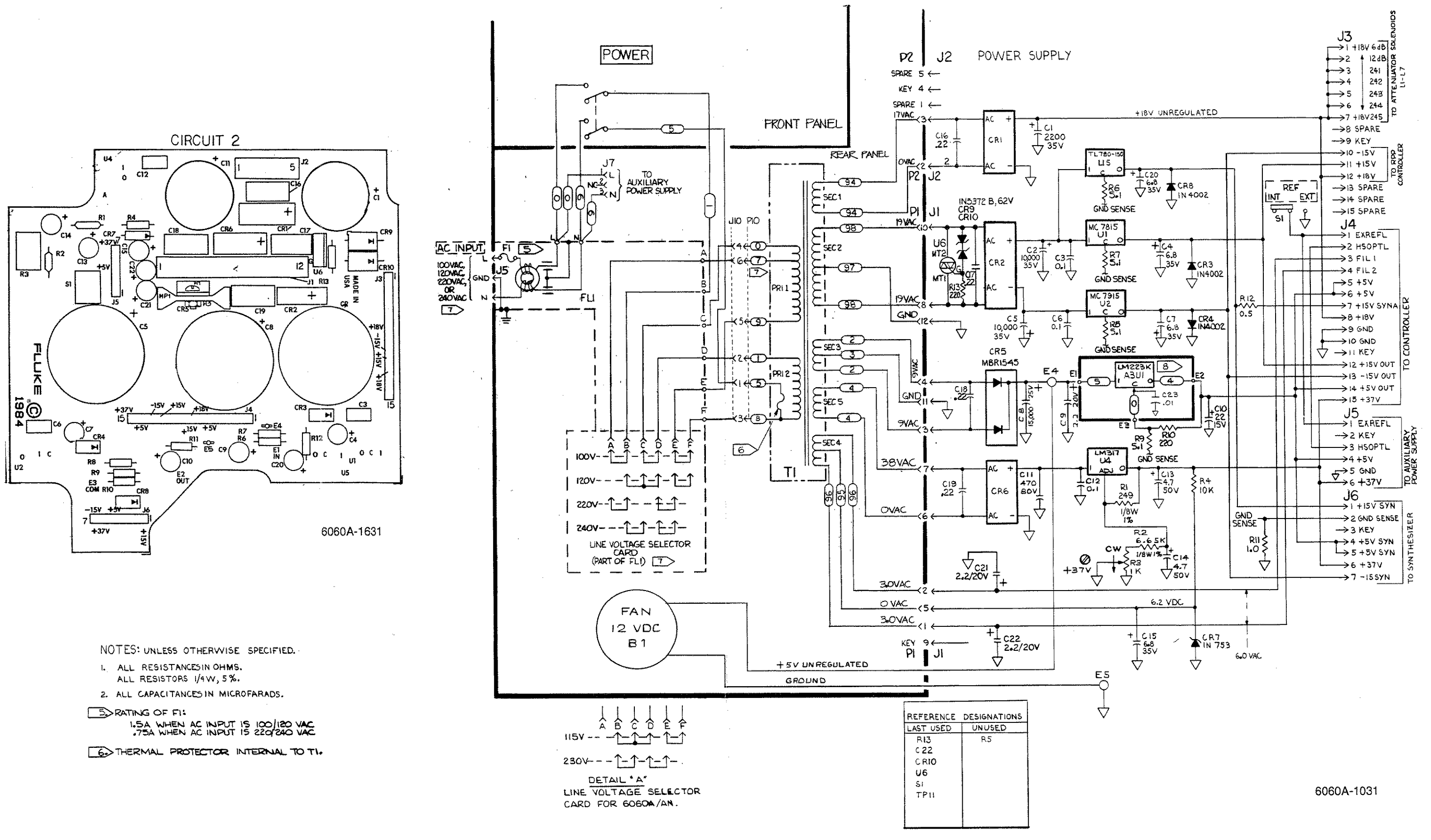

Figure 7-13. A3A1 Power Supply PCA

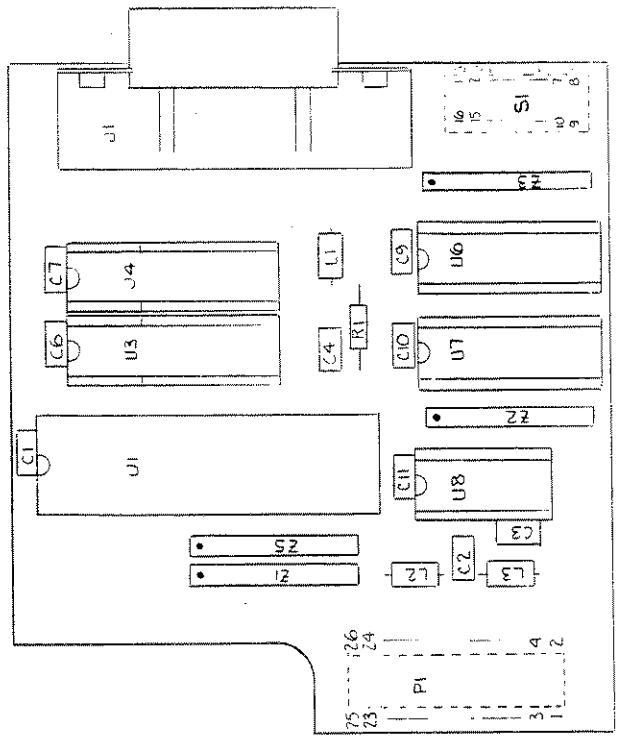

6060A-1633

TO CONTROLLER

IEEE-488 INTERFACE

REF DES	
LAST USED	NOT USED
J1 U8	U2 U5
P1 Z4	C5 C8
S1 R1	
L3 C11	

NOTES: (UNLESS OTHERWISE SPECIFIED.)

1. ALL RESISTOR VALUES ARE IN OHMS.
   ALL CAPACITOR VALUES ARE IN MICROFARADS.

6060A-1033

Figure 7-16. A3A3A1 IEEE-488 Interface PCA

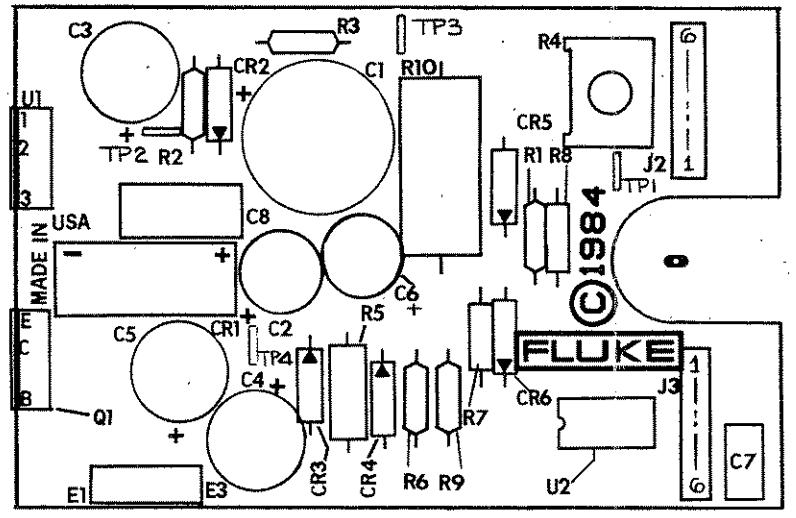

6060A-1632

NOTES : (UNLESS OTHERWISE SPECIFIED,)

1. ALL RESISTOR VALUES ARE IN OHMS.
2. ALL CAPACITOR VALUES ARE IN MICROFARADS.

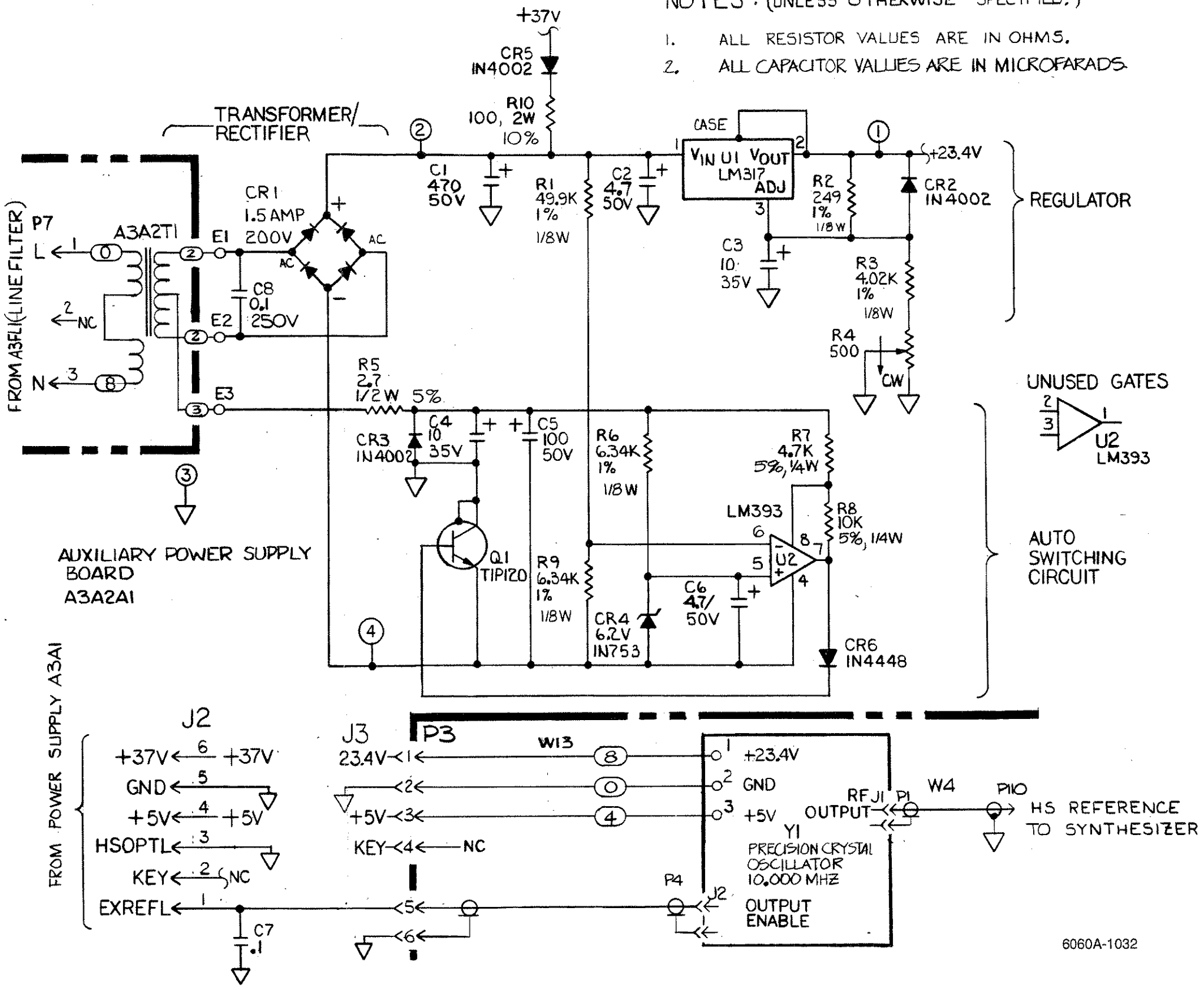

6060A-1032

REFERENCE DESIGNATIONS		
HIGHEST USED		NOT USED
R10	C8	J1
CR6	U2	
Q1	E3	
Y1		
J3		

Figure 7-14. A3A2A1 High-Stability (Ovened) Reference PCA (Option -130)

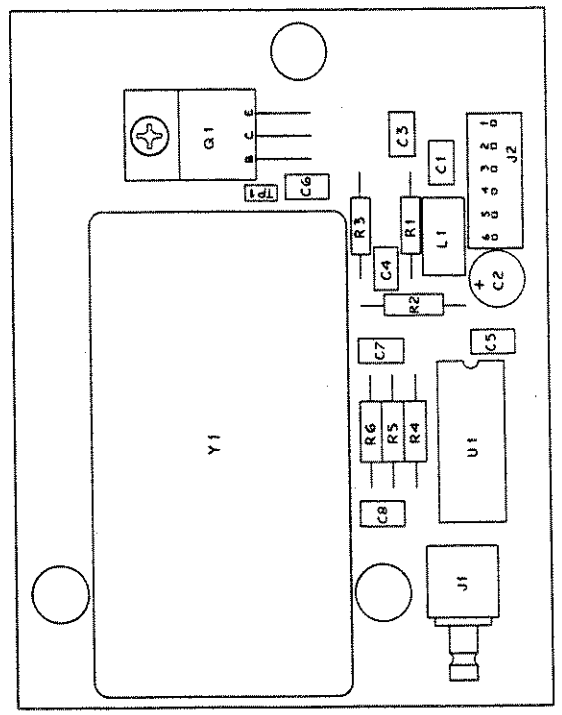

6060A-1634

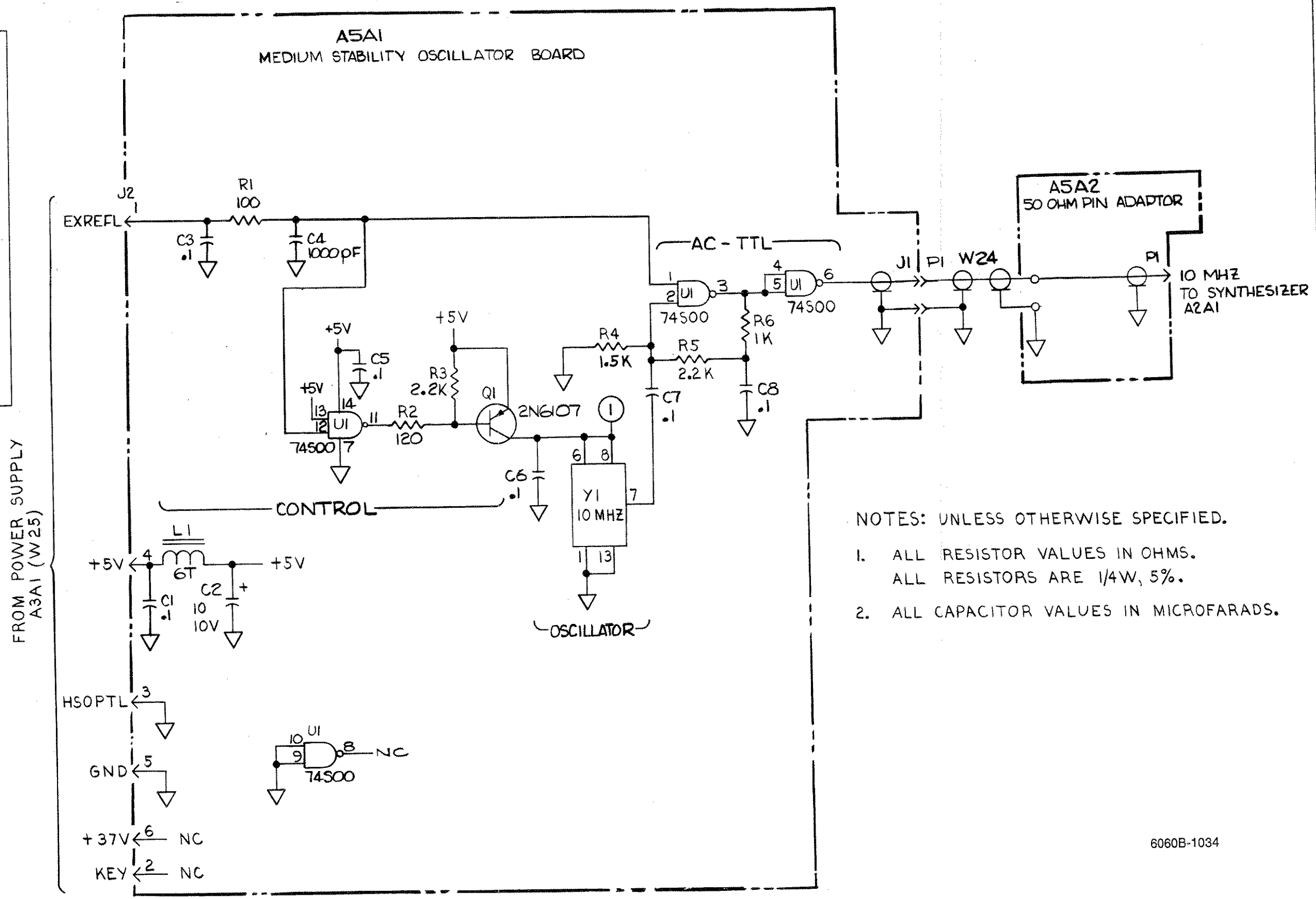

NOTES: UNLESS OTHERWISE SPECIFIED.

1. ALL RESISTOR VALUES IN OHMS.
   ALL RESISTORS ARE 1/4W, 5%.
2. ALL CAPACITOR VALUES IN MICROFARADS.

6060B-1034

Figure 7-15. A5A1 Medium-Stability Reference PCA (Option -132)

FLUKE 6060B/6061A OPERATOR INFORMATION CARD

REJECTED ENTRY CODES (Press the [STATUS] key to display codes)

000 000 000 indicates no rejected entries.

001 000 000 = FM Deviation not between 0 and 99.9 kHz
002 000 000 = FM Deviation Step not between 0 and 99.9 kHz
004 000 000 = AM Depth not between 0 and 99%
010 000 000 = AM Depth Step not between 0 and 99%
020 000 000 = IEEE-488 command syntax error
040 000 000 = IEEE-488 input value out of range
100 000 000 = Special function requires IEEE
200 000 000 = IEEE edit or step beyond allowed range
000 001 000 = Frequency not between 10 kHz and 1050 MHz
000 004 000 = Frequency Step not between 0 and and 1050 MHz
000 040 000 = Invalid memory location
000 100 000 = Invalid data in memory
000 200 000 = Special function not allowed
000 000 001 = Output amplitude not between 10 nV and 2V
000 000 002 = Insufficient resolution for units conversion
000 000 004 = Units conversions to volts not allowed with reference in volts
000 000 010 = Units conversions to dB not allowed with reference in volts
000 000 020 = Amplitude Step not between 0 and 166 dB or 0 and 1999V
000 000 040 = Units conversion of Amplitude Step not allowed
000 000 100 = Amplitude step and current amplitude display not in same units

UNCAL CODES (Press the [STATUS] key to display codes)

Flashing codes (denoted by *) indicate abnormal operation or aberrated output. Non-flashing codes indicate operation outside specified range.

000 000 000 indicates no UNCAL conditions.

001 000 000 = FM Dev < 100 Hz
002 000 000 = Excess FM Deviation for output freq < .4 MHz
* 004 000 000 = Excess FM Deviation, main or reference PLL unlocked
020 000 000 = AM depth > 90%
* 000 010 000 = Main or reference PLL unlocked
000 000 001 = Level vernier below calibrated range
000 000 002 = Peak (AM) amplitude > +13 dBm
* 000 000 004 = Amplitude unleveled
* 000 000 010 = Fixed-range level vernier at 0
* 000 000 020 = Fixed-range level vernier at full scale
* 000 000 040 = RPP tripped
000 000 100 = Level < -127 dBm
000 000 200 = Level correction disabled
* 000 000 400 = RF off

SPECIAL FUNCTION OPERATION (Press the [SPCL] key, then press the 2-digit code)

The two-digit code consists of a class numeric followed by a mode numeric. The activated modes of classes 2 through 9 are shown in the FREQUENCY display field while the [SPCL] key is pressed. For example, reading from left to right, 01000201 indicates that relative amplitude, slow key-repeat-rate, and amplitude fixed-range are selected.

Code	Function	Code	Function
00	Clears all special functions	20/21	Disable/enable relative freq.
02	Initiates self test	30/31	Disable/enable relative ampl
03	Display check	40	Not used
04	Key check	50	Not used
07/08	Set/reset SRQ	60	Not used
09	Display S/W rev & instr ID	70/71/72	Medium/fast/slow key-rep-rate
10	Display IEEE-488 address	80	Enable amplitude correction
11	Display self test results	81	Disable all level correction
12/13	Turn on/off Display	82	Disable attenuator correction
14	Initialize Memory	83-86	Program alternate 24 dB atten
15	Latch test	90/91	Disable/enable ampl fixed-rng
16	Display Option Loading		

SELF TEST RESULTS (Press the [SPCL] [1] [1] keys to display the results)

The self test results are reported in the four display fields as follows:

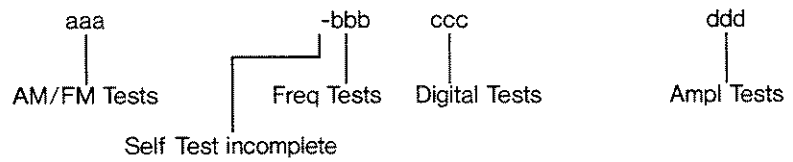

000 000 000 000 indicates all tests passed.

MEMORY

Instrument settings may be stored in locations 01 through 50 and later recalled from Non-Volatile Memory. Location 98 contains the Instrument Preset State.

REV 0 P/N 812461