Agilent Technologies
ESA Spectrum Analyzers & EMC Analyzers
Component-Level Information

Agilent Part Number E4401-90310

Table of Contents

Refer to Volume 2 for A7A1 through A8A1A2

Reference Designator	Description	Agilent Part Number
N/A	General CLIP Information	5958-7060
A1A1	Front Panel Interface	E4401-60234
A2A1	1.5 GHz Tracking Generator Control	E4401-60095
A2A1	3.0 GHz Tracking Generator Driver	E4403-60004
A2A2	1.5 GHz Tracking Generator RF (50 Ohm)	E4401-60004
A2A2	1.5 GHz Tracking Generator RF (75 Ohm)	E4402-60004
A2A3	1.5 GHz Tracking Generator Output (50 Ohm)	E4401-60005
A2A3	1.5 GHz Tracking Generator Output (75 Ohm)	E4402-60005
A3	21.4 MHz IF	E4401-60183
A4	Processor	E4401-60059
A6	Speaker/Floppy	E4401-60008
A7	Motherboard (ESA E-Series)	E4401-60107
A7	Motherboard (ESA L-Series)	E4411-60013

Component-Level Information Packet

General CLIP Information

Agilent Technologies

Agilent Part Number: 5958-7060
Printed in Malaysia April 2001

Notice

The information contained in this document is subject to change without notice. Agilent Technologies makes no warranty of any kind with regard to this material, including but not limited to, the implied warranties of merchantability and fitness for a particular purpose. Agilent Technologies shall not be liable for errors contained herein or for incidental or consequential damages in connection with the furnishing, performance, or use of this material.

© Copyright Agilent Technologies Inc. 2000, 2001
All Rights Reserved. Reproduction, adaptation, or translation without prior written permission is prohibited, except as allowed under the copyright laws.

General CLIP Information

Component-Level Information Packets (CLIPs) provide information for selected, repairable instrument assemblies. Each CLIP contains a parts list, component-location diagram, and schematic diagram. Each CLIP has an HP part number, which is changed whenever the HP part number for its related instrument assembly is changed.

Updated or replacement CLIPs may be ordered through your local Hewlett-Packard Sales or Service office. Use the CLIP part number provided in Table A-1 of the Service Manual for the instrument documented by this CLIP set.

The information included in this "General CLIP Information" packet is listed below.

- Table 1 provides a guide to reference designations, abbreviations, and multipliers used in the "Description" column of the parts lists.
- Table 2 lists manufacturer codes used in the "Mfr Code" column of the parts lists, along with the names of the manufacturers they represent.
- Figure 1 provides a guide to graphics symbols used on schematic and block diagrams.
- Foldout 1 is an illustration of the general layout of schematic and block diagrams.

Table 1. Reference Designations, Abbreviations, and Multipliers (1 of 4)

REFERENCE DESIGNATIONS

A	Assembly
AT	Attenuator, Isolator, Limiter, Termination
B	Fan, Motor
BT	Battery
C	Capacitor
CP	Coupler
CR	Diode, Diode Thyristor, Step Recovery Diode, Varactor
DC	Directional Coupler
DL	Delay Line
DS	Annunciator, Lamp, Light Emitting Diode (LED), Signaling Device (Visible)
E	Miscellaneous Electrical Part
F	Fuse
FL	Filter
HY	Circulator
J	Electrical Connector (Stationary Portion), Jack
K	Relay
L	Coil, Inductor
M	Meter
MP	Miscellaneous Mechanical Part
P	Electrical Connector (Movable Portion), Plug
Q	Silicon Controlled Rectifier (SCR), Transistor, Triode Thyristor
R	Resistor
RT	Thermistor
S	Switch
T	Transformer
TB	Terminal Board
TC	Thermocouple
TP	Test Point
U	Integrated Circuit, Microcircuit
V	Electron Tube
VR	Breakdown Diode (Zener), Voltage Regulator
W	Cable, Wire, Jumper
X	Socket
Y	Crystal Unit (Piezoelectric, Quartz)
Z	Tuned Cavity, Tuned Circuit

ABBREVIATIONS

A

A	Across Flats, Acrylic, Air (Dry Method), Ampere
ADJ	Adjust, Adjustment
ANSI	American National Standards Institute (formerly USASI-ASA)
ASSY	Assembly
AWG	American Wire Gage

B

BCD	Binary Coded Decimal
BD	Board, Bundle
BE-CU	Beryllium Copper
BNC	Type of Connector
BRG	Bearing, Boring
BRS	Brass
BSC	Basic
BTN	Button

C

C	Capacitance, Capacitor, Center Tapped, Cermet, Cold, Compression
CCP	Carbon Composition Plastic
CD	Cadmium, Card, Cord
CER	Ceramic
CHAM	Chamfer
CHAR	Character, Characteristic, Charcoal
CMOS	Complementary Metal Oxide Semiconductor
CNDCT	Conducting, Conductive, Conductivity, Conductor
CONT	Contact, Continuous, Control, Controller
CONV	Converter
CPRSN	Co mpression
CUP-PT	Cup Point
CW	Clockwise, Continuous Wave

D

D	Deep, Depletion, Depth, Diameter, Direct Current
DA	Darlington

Table 1. Reference Designations, Abbreviations, and Multipliers (2 of 4)

ABBREVIATIONS					
DAP-GL	Diallyl Phthalate Glass	FT	Current Gain Bandwidth Product (Transition Frequency), Feet, Foot	JFET	Junction Field Effect Transistor
DBL	Double				
DCDR	Decoder				**K**
DEG	Degree				
D-HOLE	D-Shaped Hole	FXD	Fixed	K	Kelvin, Key, Kilo, Potassium
DIA	Diameter				
DIP	Dual In-Line Package		**G**	KNRLD	Knurled
DIP-SLDR	Dip Solder			KVDC	Kilovolts Direct Current
D-MODE	Depletion Mode	GEN	General, Generator		
DO	Package Type Designation	GND	Ground		
		GP	General Purpose, Group		**L**
DP	Deep, Depth, Diametric Pitch, Dip			LED	Light Emitting Diode
DP3T	Double Pole Three Throw		**H**	LG	Length, Long
				LIN	Linear, Linearity
DPDT	Double Pole Double Throw	H	Henry, High	LK	Link, Lock
		HDW	Hardware	LKG	Leakage, Locking
DWL	Dowell	HEX	Hexadecimal, Hexagon, Hexagonal	LUM	Luminous
	E				
		HLCL	Helical		
E-R	E-Ring	HP	Hewlett-Packard Company, High Pass		**M**
EXT	Extended, Extension, External, Extinguish			M	Male, Maximum, Mega, Mil, Milli, Mode
			I		
	F				
		IC	Collector Current, Integrated Circuit	MA	Milliampere
				MACH	Machined
F	Fahrenheit, Farad, Female, Film (Resistor), Fixed, Flange, Frequency	ID	Identification, Inside Diameter	MAX	Maximum
				MC	Molded Carbon Composition
		IF	Forward Current, Intermediate Frequency		
FC	Carbon Film/ Composition, Edge of Cutoff Frequency, Face			MET	Metal, Metallized
				MHZ	Megahertz
		IN	Inch	MINTR	Miniature
		INCL	Including	MIT	Miter
FDTHRU	Feedthrough	INT	Integral, Intensity, Internal	MLD	Mold, Molded
FEM	Female			MM	Magnetized Material, Millimeter
FIL-HD	Fillister Head				
FL	Flash, Flat, Fluid		**J**	MOM	Momentary
FLAT-PT	Flat Point			MTG	Mounting
FR	Front	J-FET	Junction Field Effect Transistor	MTLC	Metallic
FREQ	Frequency			MW	Milliwatt

Table 1. Reference Designations, Abbreviations, and Multipliers (3 of 4)

ABBREVIATIONS

	N
N	Nano, None
N-CHAN	N-Channel
NH	Nanohenry
NM	Nanometer, Nonmetallic
NO	Normally Open, Number
NOM	Nominal
NPN	Negative Positive Negative (Transistor)
NS	Nanosecond, Non-Shorting, Nose
NUM	Numeric
NYL	Nylon (Polyamide)
	O
OA	Over-All
OD	Outside Diameter
OP AMP	Operational Amplifier
OPT	Optical, Option, Optional
	P
PA	Picoampere, Power Amplifier
PAN-HD	Pan Head
PAR	Parallel, Parity
PB	Lead (Metal), Pushbutton
PC	Printed Circuit
PCB	Printed Circuit Board
P-CHAN	P-Channel
PD	Pad, Power Dissipation
PF	Picofarad, Power Factor
PKG	Package
PLSTC	Plastic
PNL	Panel
PNP	Positive Negative Positive (Transistor)
POLYC	Polycarbonate
POLYE	Polyester
POT	Potentiometer
POZI	Pozidriv Recess
PREC	Precision
PRP	Purple, Purpose
PSTN	Piston
PT	Part, Point, Pulse Time
PW	Pulse Width
	Q
Q	Figure of Merit
	R
R	Range, Red, Resistance, Resistor, Right, Ring
REF	Reference
RES	Resistance, Resistor
RF	Radio Frequency
RGD	Rigid
RND	Round
RR	Rear
RVT	Rivet, Riveted
	S
SAWR	Surface Acoustic Wave Resonator
SEG	Segment
SGL	Single
SI	Silicon, Square Inch
SL	Slide, Slow
SLT	Slot, Slotted
SMA	Subminiature, A Type (Threaded Connector)
SMB	Subminiature, B Type (Slip-on Connector)
SMC	Submi niature, C-Type (Threaded Connector)
SPCG	Spacing
SPDT	Single Pole Double Throw
SPST	Single Pole Single Throw
SQ	Square
SST	Stainless Steel
STL	Steel
SUBMIN	Subminiature
SZ	Size
	T
T	Teeth, Temperatu re, Thickness, Time, Timed, Tooth, Typical
TA	Ambient Temperature, Tantalum
TC	Temperature Coeffi cient
THD	Thread, Threaded
THK	Thick
TO	Package Type Designation
TPG	Tapping
TR-HD	Truss Head
TRMR	Trimmer
TRN	Turn, Turns
TRSN	Torsion

Table 1. Reference Designations, Abbreviations, and Multipliers (4 of 4)

ABBREVIATIONS

	U	VAR	Variable		**Y**
		VDC	Volts—Direct Current		
UCD	Microcandela			YIG	Yttrium-Iron-Garnet
UF	Microfarad				
UH	Microhenry		**W**		
UL	Microliter, Underwriters' Laboratories, Inc.	W	Watt, Wattage, White, Wide, Width		**Z**
UNHDND	Unhardened	W/SW	With Switch	ZNR	Zener
		WW	Wire Wound		
	V				
			X		
V	Variable, Violet, Volt, Voltage	X	By (Used with Dimensions), Reactance		
VAC	Vacuum, Volts—Alternating Current				

MULTIPLIERS

Abbreviation	Prefix	Multiple	Abbreviation	Prefix	Multiple
T	tera	10^{12}	m	milli	10^{-3}
G	giga	10^{9}	μ	micro	10^{-6}
M	mega	10^{6}	n	nano	10^{-9}
k	kilo	10^{3}	p	pico	10^{-12}
da	deka	10^{2}	f	femto	10^{-15}
d	deci	10^{-1}	a	atto	10^{-18}
c	centi	10^{-2}			

Table 2. Manufacturers Code List

Mfr Code	Manufacturer Name	Address	Country	ZIP Code
00039	NEC ELECTRONICS INC	MTN VIEW, CA	US	94043
00046	UNITRODE CORP	LEXINGTON, MA	US	02173
00075	ARIZONA COIL INC	NOGALES, AZ	US	85621
00273	STILLWATER MFG CO	EAST FREEDOM, MA	US	02717
00278	MCCOY ELECTRONICS CO	HOLLY SPRINGS, PA	US	17065
00350	EXAR INTEGRATED SYSTEMS INC	SUNNYVALE, CA	US	94086
00466	NORELCO NORTH AMER PHILIPS LTG CORP	LOS ANGELES, CA	US	90021
00493	UNITED CHEMI-CON INC	COMPTON, CA	US	90220
00746	ROHM CORP	IRVINE, CA	US	92713
00779	NICHICON (AMERICA) CORP	SCHAUMBERG, IL	US	60195
00830	KYOCERA INTERNATIONAL INC	SAN DIEGO, CA	US	
00901	UNION CARBIDE CORP	DANBURY, CT	US	06810
01064	SCHAAL BROS INC	BERTHOUD, CO	US	80513
01074	HOLSWORTHY ELECTRONICS LTD	HOLSWORTHY	EG	
01128	RES-NET CORP	WHIPPANY, NJ	US	07981
01131	WESTERN THERMISTOR CORP	OCEANSIDE, CA	US	92054
01136	ELCO INDUSTRIES INC	ROCKFORD, IL	US	61125
01172	R C D COMPONENTS INC	BEDFORD, NH	US	03102
01185	MAGNET WIRE CORP	NEW YORK, NY	US	10013
01230	AEROVOX CORP	NEW BEDFORD, MA	US	02741
01250	GTE SYLVANIA ELEK COMPONENTS GROUP	WALTHAM, MA	US	02154
01339	GETTIG ENGRG & MFG CO INC	SPRING MILLS, PA	US	16875
01380	AMP INC	HARRISBURG, PA	US	17111
01409	CROVEN CRYSTALS	WHITBY	CN	L1N 5
01417	NEL FREQUENCY CONTROLS INC	BURLINGTON, WI	US	53105
01452	SANGAMO WESTON INC	NORCROSS, GA	US	30071
01461	GOE ENGINEERING CO INC	ONTARIO, CA	US	91761
01468	STETTNER & CO	LAUF	GM	D-856
01478	BOYD CORP	PLEASANTON, CA	US	94566
01542	HP DIV 01 SAN JOSE COMPONENTS	SAN JOSE, CA	US	95131
01590	PLESSEY SEMICONDUCTORS	SANTA ANA, CA	US	92705
01607	ALLEN-BRADLEY CO INC	EL PASO, TX	US	79935
01688	MURATA CORPORATION OF AMERICA	MARIETTA, GA	US	30067
01691	TRW INC SEMICONDUCTOR DIV	LAWNDALE, CA	US	90260
01698	TEXAS INSTRUMENTS INC	DALLAS, TX	US	75265
01708	JUBULATION	SANTA CRUZ, CA	US	95060
01736	ALLIED ELECTRONICS CORP	CHICAGO, IL	US	60612
01760	MATSUO ELECTRONICS OF AMERICA	HUNTINGTON BEACH, CA	US	90245
01795	SYNERTEK	SANTA CLARA, CA	US	95051
01850	AROMAT CORP	MOUNTAINSIDE, NJ	US	07092
01854	RCL ELECTRONICS INC	NORTHBROOK, IL	US	60062
01869	PULSE ENGINEERING INC	SAN DIEGO, CA	US	92111
01876	HP DIV 02 SCD IC'S	SANTA CLARA, CA	US	95050
01885	HAMILTON STANDARD CONTROLS INC	WINDWOR LOCKS, CT	US	06096
01886	COILCRAFT INC	CARY, IL	US	60013
01887	FERROXCUBE CORP	SAUGERTIES, NY	US	12477

Table 2. Manufacturers Code List (continued)

Mfr Code	Manufacturer Name	Address	Country	ZIP Code
01898	HI-G CO INC	HARTFORD, CT	US	06114
01916	BUNKER RAMO CORP AMPHENOL CONN DIV	BROADVILLE, IL	US	60153
01921	RCA CORP	NEW YORK, NY	US	10112
01923	NYLOGRIP PRODUCTS	WALTHAM, MA	US	02154
01924	ITW FASTEX	DES PLAINES, IL	US	60016
01939	ELPAC INC COMPONENTS DIV	IRVINE, CA	US	92664
01943	HP DIV 04 SPD CABLES 64	PALO ALTO, CA	US	94304
01953	HP DIV 04 SPD MOLDING 91	PALO ALTO, CA	US	94304
01973	GE CO SEMICONDUCTOR PROD DEPT	AUBURN, NY	US	13201
01991	TRANSITRON ELECTRONIC CORP	WAKEFIELD, MA	US	01880
01992	KDI PYROFILM CORP	WHIPPANY, NJ	US	07981
01993	MARKEL CORP	NORRISTOWN, PA	US	19404
02010	AVX CORP	GREAT NECK, NY	US	11021
02030	NATIONAL WIRE & CABLE CO INC	LOS ANGELES, CA	US	90031
02037	MOTOROLA INC	ROSELLE, IL	US	60195
02038	UNICORP	ORANGE, NJ	US	07050
02062	HP DIV 05 MSD	SAN JOSE, CA	US	94304
02086	WESTINGHOUSE ELEC CORP SEMICON DEPT	YOUNGWOOD, PA	US	15697
02091	ULTRONIX INC	GRAND JUNCTION, CO	US	81501
02123	EG & G INC	WELLESLEY, MA	US	02181
02139	MEPCO/ELECTRA INC	MORRISTOWN, NJ	US	07960
02145	RAYCHEM CORP	MENLO PARK, CA	US	94025
02160	PANDUIT CORP	TINLEY PARK, IL	US	60477
02170	AMATOM ELEK HARDWARE DIV OF MITE	NEW ROCHELLE, NY	US	06515
02172	JEFFERS ELECTRONICS INC	NOGALES, AZ	US	85621
02180	PRECISION MONOLITHICS INC	SANTA CLARA, CA	US	95054
02191	CORNING COMPONENTS INC	CORNING, NY	US	14830
02194	ROBINSON NUGENT INC	NEW ALBANY, IN	US	47150
02210	MILTON ROSS CO	SOUTHHAMPTON, PA	US	18966
02215	KELVIN ELECTRIC CO	VAN NUYS, CA	US	91401
02236	SILICON TRANSISTOR CORP	CHELMSFORD, MA	US	11530
02237	FAIRCHILD SEMICONDUCTOR CORP	CUPERTINO, CA	US	95014
02273	TRW INC BURLINGTON DIV	BURLINGTON, IA	US	52601
02290	RAYTHEON CO SEMICONDUCTOR DIV HQ	MOUNTAIN VIEW, CA	US	94040
02296	HP DIV 08 COLO SPRGS	COLORADO SPGS, CO	US	80907
02344	GE CO MINIATURE LAMP PROD DEPT	CLEVELAND, OH	US	44112
02362	HP DIV 09 LID COMPONENTS	LOVELAND, CO	US	80537
02363	HP DIV C5 COLORADO IC	FT COLLINS, CO	US	80525
02366	KOA SPEER ELECTRONICS INC	BRADFORD, PA	US	16701
02367	CORNELL-DUBILIER/SANGAMO	WAYNE, NJ	US	07470
02379	TEXAS CAPACITOR CO INC	HOUSTON, TX	US	77036
02392	C & K COMPONENTS INC	NEWTON, MA	US	02158
02408	DIXON INDUSTRIES CORPORATION	BRISTOL, RI	US	02809
02414	BURNDY CORP	NORWALK, CT	US	06856
02415	DALE ELECTRONICS INC	YANKTON, SD	US	57078
02440	THOMPSON BREMER DIV VARE	CHICAGO, IL	US	60622

Table 2. Manufacturers Code List (continued)

Mfr Code	Manufacturer Name	Address	Country	ZIP Code
02465	ANILLO INDUSTRIES INC	ORANGE, CA	US	92667
02483	CTS CORP	ELKHART, IN	US	46514
02484	CTS CORP PASO ROBLES	PASO ROBLES, CA	US	93446
02499	IRC INC	BOONE, NC	US	28607
02501	TELEDYNE INDUSTRIES INC	LOS ANGELES, CA	US	90067
02556	MONTROSE PRODUCTS CO	AUBURN, MA	US	01501
02567	OMTRONICS MFG INC	OMAHA, NE	US	68105
02569	CRYSTALONICS, DIV TELEDYNE	CAMBRIDGE, MA	US	02140
02572	TELEDYNE THERMATICS	ELM CITY, NC	US	27822
02574	RLC ELECTRONICS INS	MT KISCO, NY	US	10549
02577	HAMLIN INC	LAKE MILLS, WI	US	53551
02582	CLAROSTAT MFG CO INC	DOVER, NH	US	03820
02598	UNITRODE CORP	WATERTOWN, MA	US	02172
02603	NATIONAL WIRE & STAMPING INC	ENGLEWOOD, CO	US	80110
02608	THERMALLOY INC	DALLAS, TX	US	75234
02619	SOLITRON DEVICES INC (DIODES)	TAPPAN, NY	US	10983
02634	SPRAGUE ELECTRIC SEMICON DIV	CONCORD, NH	US	03301
02664	SEMTECH CORP	NEWBURY PARK, CA	US	91320
02668	EDISON ELEK DIV MCGRAW-EDISON	MANCHESTER, NH	US	03130
02675	AMERICAN COMPONENTS INC	CONSHOHOCKEN, PA	US	19428
02682	ITT SEMICONDUCTORS DIV	TUSTIN, CA	US	92680
02685	LOBAUGH ROLLIN J	SOUTH SAN FRANC, CA	US	94080
02686	WATKINS-JOHNSON CO	PALO ALTO, CA	US	94304
02688	MICROSEMI CORP	SCOTSDALE, AZ	US	85252
02696	CORNING GLASS WORKS ELEK PROD DIV	CORNING, NY	US	14830
02706	WARD LEONARD HAGERSTOWN DIV	HAGERSTOWN, MD	US	21740
02713	GENERAL INSTRUMENT CORP (DIODE)	HICKSVILLE, NY	US	11802
02718	VALOR ELECTRONICS INC	SANTA ANA, CA	US	92705
02734	AMETEK INC RODAN DIV	ANAHEIM, CA	US	92806
02739	MINI-CIRCUITS LAB	BROOKLYN, NY	US	11235
02744	ELEC-TROL INC	SAUGUS, CA	US	91350
02761	FENWAL ELECTRONICS INC	SADDLE BROOK, NJ	US	07662
02763	TELEDYNE SEMICONDUCTOR	MOUNTAIN VIEW, CA	US	94043
02771	ANSLEY ELECTRIC	LOS ANGELES, CA	US	90032
02788	M/A-COM INC	BURLINGTON, MA	US	01803
02798	CORNING ELECTRONICS	RALEIGH, NC	US	27604
02803	CODI SEMICONDUCTOR	LINDEN, NJ	US	07410
02805	COOPER INDUSTRIES INC	HOUSTON, TX	US	77210
02813	U S CAPACITOR CORP	BURBANK, CA	US	91504
02826	DENNISON MFG CO	FRAMINGHAM, MA	US	01701
02856	MOHAWK SPRING CO INC	ARLINGTON HEIGH, IL	US	60008
02865	ALPHA INDUSTRIES INC	WOBURN, MA	US	01801
02877	ANGSTROHM PRECISION INC	VAN NUYS, CA	US	91405
02883	SILICONIX INC	SANTA CLARA, CA	US	95054
02910	SIGNETICS CORP	SUNNYVALE, CA	US	94086
02923	CHOMERICS INC	WOBURN, MA	US	01801

Table 2. Manufacturers Code List (continued)

Mfr Code	Manufacturer Name	Address	Country	ZIP Code
02928	VISHAY INTERTECHNOLOGY INC	MALVERN, PA	US	19355
02937	VOLTRONICS CORP	HANOVER, NJ	US	07936
02946	DUPONT E I DE NEMOURS & CO	WILMINGTON, DE	US	19801
02995	MEPCO/CENTRALAB INC	RIVIERA, FL	US	33404
03038	INTL RECTIFIER CORP	LOS ANGELES, CA	US	90069
03122	EMCON DIV ITW	SAN DIEGO, CA	US	92129
03123	MICRO-OHM CORP	EL TORO, CA	US	92630
03171	SOLITRON DEVICES INC	PALM BEACH, FL	US	33404
03172	TRW MICROWAVE	SUNNYVALE, CA	US	94086
03174	ANZAC ELEK DIV ADAMS-RUSSEL CO INC	WALTHAM, MA	US	02154
03206	DUPONT CONNECTOR SYSTEMS	CAMP HILL, PA	US	17011
03232	PRODUCT COMPONENT CORP	MT VERNON, NY	US	10553
03239	WAVETEK	SAN DIEGO, CA	US	92111
03257	M-TRON INDUSTRIES INC	YANKTON, SD	US	57078
03259	STANFORD APPLIED ENGINEERING	SANTA CLARA, CA	US	95054
03263	ELECTRONIZED CHEMICALS CORP	BURLINGTON, MA	US	01803
03273	GOWANDA ELECTRONICS CORP	GOWANDA, NY	US	14070
03282	GENERAL CABLE CORP	NEW YORK, NY	US	10017
03285	ANALOG DEVICES INC	NORWOOD, MA	US	02062
03291	AVANTEK INC	SANTA CLARA, CA	US	95054
03292	CORNING GLASS WORKS	CORNING, NY	US	14830
03297	EMC TECHNOLOGY INC	CHERRY HILL, NJ	US	08034
03316	SPECIALTY CONNECTOR CO	FRANKLIN, IN	US	46131
03317	AEG-TELEFUNKEN CORP	ENGLEWOOD, NJ	US	07632
03334	NV PHILIPS ELCOMA	EINDHOVEN	NE	02876
03352	SWISS AUTOMATICS INC	COLUMBUS, NE	US	68601
03371	USM CORP NYLOK FASTENER DIV	TORRANCE, CA	US	90501
03380	GRIES/DYNACAST CO DIV COATES-CLARK	NEW ROCHELLE, NY	US	10802
03389	VARADYNE INC	SANTA MONICA, CA	US	90404
03394	METHODE ELECTRONICS INC	CHICAGO, IL	US	60656
03395	MEPCO/CENTRALAB INC	WEST PALM BEACH, FL	US	33407
03406	NATIONAL SEMICONDUCTOR CORP	SANTA CLARA, CA	US	95052
03412	CORNING GLASS WORKS (WILMINGTON)	WILMINGTON, NC	US	28401
03418	MOLEX INC	LISLE, IL	US	60532
03428	NONOTUCK MFG CO	HADLEY FALLS, MA	US	01075
03441	F-DYNE ELECTRONICS CO	BRIDGEPORT, CT	US	06605
03521	JOHANSON DIELECTRICS INC	BURBANK, CA	US	91510
03530	STACKPOLE COMPONENT CO	RALEIGH, NC	US	27620
03545	TELEDYNE PHILBRICK NEXUS	DEDHAM, MA	US	02026
03594	CARTER SEMICONDUCTORS	LOWELL, MA	US	01850
03621	M/A-COM CABLEWAVE MINI PROD	BURLINGTON, MA	US	01803
03627	SOLID STATE DEVICES INC	LA MIRADA, CA	US	90638
03647	INSTRUMENT SPECIALTIES CO INC	DEL WATER GAP, PA	US	07424
03651	MEPCO/ELECTRA CORP	SAN DIEGO, CA	US	92121
03658	ALPHA IND MICROELECTRONICS DIVISION	COLMAR, PA	US	18915
03706	WEST-CAP ARIZONA	SAN FERNANDO, CA	US	91340

Table 2. Manufacturers Code List (continued)

Mfr Code	Manufacturer Name	Address	Country	ZIP Code
03714	INTERSIL INC	CUPERTINO, CA	CA	95014
03724	BIVAR INC	SANTA ANA, CA	US	92705
03740	ERIE TECH PROD INC ERIE FREQ CONT	CARLISLE, PA	US	17013
03744	BOURNS INC	RIVERSIDE, CA	US	92507
03746	SPECTRUM CONTROL INC	ERIE, PA	US	16505
03747	COLORADO CRYSTAL CORP	LOVELAND, CO	US	80537
03762	TELE-TECH CORP	BOZEMAN, MT	US	59771
03793	SILICON GENERAL INC	SAN JOSE, CA	US	95134
03794	ADVANCED MICRO DEVICES INC	SUNNYVALE, CA	US	94086
03795	MOTOROLA INC	FRANKLIN PARK, IL	US	60131
03799	HARRIS CORP	MELBOURNE, FL	US	32901
03811	INTEL CORP	SANTA CLARA, CA	US	95054
03827	FAIR RITE PRODUCTS CORP	WALLKILL, NY	US	12589
03849	MICROSYSTEMS INTERNATIONAL LTD	OTTAWA	CN	
03910	GENERAL ELECTRIC CO	PHILADELPHIA, PA	US	19124
03923	SIEMENS CORP	ISELIN, NJ	US	08830
03938	MIDLAND-ROSS CORP	CLEVELAND, OH	US	44113
03972	OHMITE MFG CO	SKOKIE, IL	US	60076
03973	HP DIV 45 NMD	SANTA ROSA, CA	US	95401
04068	LABINAL COMPONENTS & SYSTEMS INC	ELK GROVE VILLA, IL	US	60007
04078	SGS-THOMSON MICROELECTRONICS INC	PHOENIX, AZ	US	85022
04092	MONOLITHIC MEMORIES INC	SANTA CLARA, CA	US	95054
04121	SEMICONDUCTOR CIRCUITS INC	HAVERHILL, MA	US	01830
04150	VICLAN INC	SAN DIEGO, CA	US	92138
04169	SANGAMO ELECTRIC CO	SPRINGFIELD, IL	US	62702
04181	AHAM-TOR	RANCHO, CA	US	91702
04182	SHALLCROSS INC	NORTHBROK, IL	US	60062
04200	SPRAGUE ELECTRIC CO	LEXINGTON, MA	US	02173
04204	SPS TECHNOLOGIES	NEWTOWN, PA	US	18940
04213	STIMPSON EDWIN B CO INC	BROOKLYN, NY	US	11705
04225	THOMAS & BETTS CORP	RARITAN, NJ	US	08869
04234	DELBERT BLINN CO	POMONA, CA	US	91766
04261	INSULECTRO CORP	BURLINGAME, CA	US	94010
04314	VLN CORP VICTOREEN INSTRUMENT DIV	CLEVELAND, OH	US	44103
04379	AMETEK INC	PAOLI, PA	US	19301
04393	CENTRE ENGINEERING INC	STATE COLLEGE, PA	US	16801
04418	ALLEN MFG CO	HARTFORD, CT	US	06101
04423	G.E. CERAMICS, INC.	CHATTANOOGA, TN	US	37405
04458	BLILEY ELECTRIC CO	ERIE, PA	US	16508
04464	BRAND REX CO	WILLIMANTIC, CT	US	06226
04475	CAMBRIDGE THERMIONIC CORP	CAMBRIDGE, MA	US	02138
04486	ITT CORP	NEW YORK, NY	US	10022
04492	CENTRALAB INC	MILWAUKEE, WI	US	53209
04504	GENERAL INSTRUMENT CORP	CLIFTON, NJ	US	07012
04507	TRW INC	CLEVELAND, OH	US	44124
04514	DOW CORNING CORP	MIDLAND, MI	US	48641

Table 2. Manufacturers Code List (continued)

Mfr Code	Manufacturer Name	Address	Country	ZIP Code
04522	ELECTRO MOTIVE CORP	FLORENCE, SC	US	06226
04550	GENERAL ELECTRIC CO	FAIRFIELD, CT	US	06430
04563	ERIE TECHNOLOGICAL PRODUCTS INC	ERIE, PA	US	16512
04564	ESSEX INTERNATIONAL INC	FORT WAYNE, IN	US	46804
04567	ITT HARPER DIV	CHICAGO, IL	US	60606
04568	BECKMAN INDUSTRIAL CORP	FULLERTON, CA	US	92635
04581	BARWOOD MFG CORP	EVERETT, MA	US	02149
04605	FISCHER SPECIAL MFG CO	CINCINNATI, OH	US	45206
04615	J F D ELECTRONICS CORP	BROOKLYN, NY	US	11219
04645	SIGNALITE DIV GENERAL INST CORP	NEPTUNE, NJ	US	07753
04648	PIEZO CRYSTAL CO	CARLSILE, PA	US	17013
04670	EF JOHNSON CO	WASECA, MN	US	56093
04672	TRW INC PHILADELPHIA DIV	PHILADELPHIA, PA	US	19108
04703	LITTELFUSE INC	DES PLAINES, IL	US	60016
04719	MARWEDEL C W	SAN FRANCISCO, CA	US	94103
04726	3M CO	ST PAUL, MN	US	55144
04733	BELL INDUSTRIES INC MILLER JW DIV	COMPTON, CA	US	90224
04757	OAK SWITCH SYSTEMS INC	CRYSTAL LAKE, IL	US	60014
04776	POTTER & BRUMFIELD INC	PRINCETON, IN	US	47671
04805	ILLINOIS TOOL WORKS INC SHAKEPROOF	ELGIN, IL	US	60126
04821	TILLEY MFG CO	MORGAN HILL, CA	US	94070
04822	STACKPOLE CARBON CO	ST MARYS, PA	US	15857
04828	TINNERMAN PRODUCTS INC	CLEVELAND, OH	US	44101
04830	STEWART STAMPING CORP	YONKERS, NY	US	10704
04853	VARFLEX CORP	ROME, NY	US	13440
04880	ZIERICK MFG CO	MT KISCO, NY	US	10549
04935	MEPCO ELECTRA CORP	MORRISTOWN, NJ	US	07960
04939	SCHNITZER ALLOY PRODUCTS CO	ELIZABETH, NJ	US	07206
04977	ITT CORP COMPONENTS DIV	NEW YORK, NY	US	10022
04990	GRAYHILL INC	LA GRANGE, IL	US	60525
05016	MONITOR PRODUCTS CO INC	OCEANSIDE, CA	US	92054
05065	TEXAS INSTRUMENTS INC	ATTLEBORO, MA	US	02703
05088	VARO INC	GARLAND, TX	US	75046
05098	VICTORY ENGINEERING CORP	SPRINGFIELD, NJ	US	07081
05108	KULKA-SMITH INC	MANASQUAN, NJ	US	08736
05131	ELECTRONIC DEVICES INC	YONKERS, NY	US	10710
05160	VRN INTERNATIONAL	ST PETERSBURG, FL	US	33710
05176	AMERICAN SHIZUKI CORP	CANOGA PARK, CA	US	91304
05232	BRADY W H CO	MILWAUKEE, WI	US	53209
05293	PRECISION METAL PRODUCT CO	STONEHAM, MA	US	02180
05347	UNIMICA	NEW YORK, NY	US	10013
05350	WILMINGTON FIBRE SPECIALTY CO	NEW CASTLE, DE	US	19720
05364	LITTON PRECISION PROD INC	VAN NUYS, CA	US	91409
05368	FCP INC	OLATHE, KS	US	66062
05400	REESE J RAMSEY INC	NEW YORK, NY	US	10007
05436	BURR-BROWN CORP	TUCSON, AZ	US	85706

Table 2. Manufacturers Code List (continued)

Mfr Code	Manufacturer Name	Address	Country	ZIP Code
05447	BERGQUIST CO	MINNEAPOLIS, MN	US	55420
05453	ICO-RALLY CORP	SUNNYVALE, CA	US	94303
05461	ITT HARPER INC	MORTON GROVE, IL	US	60053
05466	EMHART CORP	FARMINGTON, CT	US	06032
05507	MILLER DIAL & NAMEPLATE CO	EL MONTE, CA	US	91734
05518	AUGAT INC	MANSFIELD, MA	US	02048
05524	DALE ELECTRONICS INC	COLUMBUS, NE	US	68601
05535	KEYSTONE ELECTRONICS CORP	NEW YORK, NY	US	10012
05545	NATIONAL TEL TRONICS CORP	YONKERS, NY	US	10701
05559	ALPHA WIRE CORP	ELIZABETH, NJ	US	07207
05568	JACOBSON MFG CO INC	KENILWORTH, NJ	US	07033
05589	UNIFORM TUBES	COLLEGEVILLE, PA	US	19426
05623	CAMDEN WIRE CO INC	CAMDEN, NY	US	13316
05630	WESTON COMPONENTS	ARCHBALD, PA	US	18403
05648	MAGNECRAFT ELECTRIC CO	CHICAGO, IL	US	60630
05661	ALCO ELECTRONIC PRODUCTS INC	NORTH ANDOVER, MA	US	01845
05668	VITRAMON INC	MONROE, CT	US	06468
05683	WECKESSER CO INC	CHICAGO, IL	US	60641
05704	SAN FERNANDO ELECTRIC MFG CO	SAN FERNANDO, CA	US	91341
05742	P C A ELECTR●NICS INC	SEPULVEDA, CA	US	91343
05768	MALCO-A MICRODOT CO	PASADENA, CA	US	91030
05769	ITT SEALECTRO CORP	TRUMBULL, CT	US	06611
05792	INTL ELECTRONIC RESEARCH CORP	BURBANK, CA	US	91502
05809	MARSHALL IND CAPACITOR DIV	MONROVIA, CA	US	91016
05826	AMER PRCN IND INC DELEVAN DIV	AURORA, NY	US	14052
05879	AMPHENOL CORPORATION	DANBURY, CT	US	06810
05917	RIFA AB	STOCKHOLM	SW	S-163
05943	TEXAS INSTRUMENTS DEUTSCHLAND GMBH	FREISING	GM	8050
05946	VALVO GMBH	HAMBURG	GM	2000
05951	WICKMANN-WERKE A G	WITTEN-ANNEN	GM	5870
05959	MARQUARDT GMBH	RIETHEIM	GM	D-720
05967	VTM A/S	GLOSTRUP	DK	2080
05982	CELDUC CONSTR ELECTRIQUES DU CENTRE	SORBIERS	FR	42
05985	SESCOSEM	SAINT EGREVE	FR	75781
05992	EFCO COMPOSANTS	NANTERRE	FR	
05993	CORNING GLASS EUROPE SOVCOR	LE VESINET	FR	
06003	SESCOSEM (63)	PARIS	FR	75781
06032	STC/STANTEL	DEVON	EG	
06039	SEALECTRO LTD	PORTSMOUTH	EG	
06058	BOURNS TRIMPOT LTD	MIDDLESEX	EG	
06118	R●EDERSTEIN/RESISTA GMBH	LANDSHUT	GM	8300
06121	SIEMENS AG	MUNICH	GM	8000
06127	WIMA	MANNHEIM	GM	6800
06252	AB ELEKTRONIK GMBH	SALZBURG	AU	A-501
06328	SCHURTER AG	LUZERN	SW	CH-60
06330	CONDENSATEURS FRIBOURG S A	FRIBOURG	SW	

Table 2. Manufacturers Code List (continued)

Mfr Code	Manufacturer Name	Address	Country	ZIP Code
06337	PHILLIPS GLOEILAMPENFABRIEKEN N V	EINDHOVEN	HL	
06344	FUJITSU MICROELECTRONICS INC	SANTA CLARA, CA	US	95054
06347	HITACHI AMERICA LTD	SUNNYVALE, CA	US	94086
06352	TDK CORPORATION OF AMERICA	SKOKIE, IL	US	60076
06354	TOSHIBA CORP	TOKYO	JP	
06424	E-SIL COMPONENTS LTD	SUNDERLAND	EG	SR4 6
06501	BARBER & COLEMAN LTD	SALE CHES	EG	
06563	SIEMENS CORP COMPONENTS GROUP	SCOTTSDALE, AZ	US	85252
06650	AEG-TELEFUNKEN	HEILBRONN	GM	7100
06665	SAMTEC	NEW ALBANY, IN	US	47150
06784	MIDWEST COMPONENTS	MUSKEGON, MI	US	49443
06857	TRAK MICROWAVE CORP	TAMPA, FL	US	33614
06860	HUBER & SUHNER AG	HERISAU	SW	
06900	JUDD WIRE	BURLINGTON, MA	US	01803
06916	SONY CORP	TOYKO	JP	141
06951	TRW RESISTIVE PRODUCTS DIV	CORPUS CHRISTI, TX	US	78411
07041	R.A.F. ELECTRONIC HARDWARE INC	STRATFORD, CT	US	06497
07050	MICRO POWER SYSTEMS	SANTA CLARA, CA	US	95050
07158	EATON CORP	CLEVELAND, OH	US	44144
07179	AAVID ENGINEERING INC	LACONIA, NH	US	03247
07221	SUPERTEX INC	SUNNYVALE, CA	US	94086
07284	PAKTRON DIV ITW	VIENNA, VA	US	22180
07338	J K L COMPONENTS CORP	LOS ANGELES, CA	US	90064
07379	SAN-O INDUSTRIAL CORP	BOHEMIA LI, NY	US	11716
07398	BEL FUSE INC	JERSEY CITY, NJ	US	07302
07477	AMERICAN OIL & SUPPLY CO	NEWARK, NJ	US	07105
07766	LA RADIOTECHNIQUE COMPELEC	VILLEVRBANNE	FR	
07798	REMTEK CORP	SUNNYVALE, CA	US	
08097	SPRAGUE-GOODMAN ELECTRONICS	NEW HYDE PARK, NY	US	11040
08113	KAHGAN ELECTRONICS CORP	HEMPSTEAD, NY	US	11550
08123	COIL-Q CORP	BRONXVILLE, NY	US	
08259	DALE ELECTRONICS INC	TEMPE, AZ	US	85252
08261	STAR MICRONICS INC	NEW YORK, NY	US	
08335	SOURIAU INC	SAUGUS, CA	US	95203
08369	FILECA	STE GENEVIEVE	FR	
08560	OXLEY DEV LTD	CUMBRIA	EG	
08666	PANEL COMPONENTS CORP	SANTA ROSA, CA	US	
08709	PANASONIC INDUSTRIAL CO	SECAUCUS, NJ	US	07094
08778	MADISON CABLE CORP	WORCHESTER, MA	US	01603
08779	MITSUBISHI ELECTRONICS AMERICA	SUNNYVALE, CA	US	94086
08781	CATALYST RESEARCH CORP	BALTIMORE, MD	US	
08810	ROCKWELL INTERNATIONAL	ANAHEIM, CA	US	
08838	AND (ALPHA NUMERIC DISPLAYS)	BURLINGAME, CA	US	
08852	METELICS CORP	SUNNYVALE, CA	US	
09043	GLOW-LITE DIV OF DUTCH BOY	PAULS VALLEY, OK	US	
09050	XENELL	WYNNEWOOD, OK	US	

Table 2. Manufacturers Code List (continued)

Mfr Code	Manufacturer Name	Address	Country	ZIP Code
09126	ASJ PTE LTD	JURONG TOWN	SG	
09171	RHOMBUS INDUSTRIES INC	HUNTINGTON BEACH, CA	US	92649
09226	NEC ELECTRONICS INC	SANTA CLARA, CA	US	
09235	FOX ELECTRONICS	FT MEYERS, FL	US	33910
09283	TOPAZ SEMICONDUCTOR	SAN JOSE, CA	US	95132
09441	APPLIED ENGINEERING PRODUCT CO	HAMDEM, CT	US	
09448	WAMCO INC	FOUNTAIN VALLEY, CA	US	
09454	PRECISION RESISTIVE PRODS INC	MEDIAPOLIS, IA	US	52637
09507	HEWLETT PACKARD CO, MID	SANTA ROSA, CA	US	95403
09538	TUSONIX	TUCSON, AZ	US	85740
09694	ELECTRONIC ESSENTIALS	WOODSIDE, NY	US	
09849	NDK AMERICA INC	CUPERTINO, CA	US	54014
09855	KOWASANGYO CORP	TOKYO	JP	
09859	CERA-MITE CORP	GRAFTON, WI	US	53024
09862	HITACHI CABLE LTD	TOKYO	JP	
09914	UNITRODE CORP	LEXINGTON, MA	US	
09939	MURATA ERIE NORTH AMERICA INC	SMYRNA, GA	US	30080
09955	BOYD CORP	DENVER, CO	US	
10183	TADIRAN	TEL-AVIV	IS	
10200	ELECTRONIC CONCEPTS INC	EATONTOWN, NJ	US	
10290	COMMODORE SEMICONDUCTOR GROUP	NORRISTOWN, PA	US	
10302	CENTENNIAL PLASTICS	YELLVIELLE, AR	US	
10358	VOGT AG	LOSTORF	GM	
10401	NEW SYSTEMS MOLDING CORP	LOVELAND, CO	US	80537
10407	LSI LOGIC CORP	MILPITAS, CA	US	95035
10421	EPSON	TORRENCE, CA	US	
10443	HP DIV 64 NID	CORVALLIS, OR	US	
10456	PLASTEC PRODUCTS INC	FORT COLLINS, CO	US	
10457	JERMYN INDUSTRIES LTD (63)	KENT SEVENOAKS	EG	
10481	DALE ELECTRONICS INC	NORFOLK, NE	US	68701
10549	SCI MANUFACTURING INC	HUNTSVILLE, AL	US	35805
10572	XICOR, INC	MILPITAS, CA	US	
10631	GASKET SPECIALTIES	BRISBANE, CA	US	
10784	SHINNITTOKU ELECTRIC CO LTD	MINATO-KU TOKYO	JP	145
10795	STANDEX - PAUL SMITH DIVISION	CINCINNATI, OH	US	
10858	LINEAR TECHNOLOGY CORP	MILPITAS, CA	US	95035
10881	THOMSON-CSF	COURBEVOIE	FR	
10905	FIRA	LYON	FR	
11047	TEKA PRODUCTS INC	WOODSIDE, NY	US	
11111	SEEQ TECHNOLOGY INC	SAN JOSE, CA	US	
11171	SYNERGY MICROWAVE CORP	FAIRFIELD, NJ	US	
11187	VLSI TECHNOLOGY INC	SAN JOSE, CA	US	95131
11212	INDUCTOR SUPPLY, INC.	HUNTINGTON BEACH, CA	US	
11248	MICRON DIV OF R G ALLEN CO INC	NORTH HOLLYWOOD, CA	US	
11263	W GUNTHER GMBH	NURNBERG	GM	
11298	AVEL-LINDBURG	DANBURY	CT	

Table 2. Manufacturers Code List (continued)

Mfr Code	Manufacturer Name	Address	Country	ZIP Code
11345	CYPRESS SEMICONDUCTOR CORP	SAN JOSE, CA	US	95134
11357	BRISTOL ROYAL WORKSHOP BLIND	BRISTOL	EG	
11412	ISOLANTITE MFG COMPANY INC	STIRLING, NJ	US	
11421	KYOCERA CORPORATION	KYOTO	JP	
11599	MICRO-COAX COMPONENTS, INC	COLLEGEVILLE, PA	US	19426
11677	SARONIX	PALO ALTO, CA	US	
11684	JOSLYN DEFENSE SYSTEMS INC	BURLINGTON, VT	US	05401
11686	KYUSHU DENTSU CO LTD	NAGASAKI	JP	
11699	CENTRAL SEMICONDUCTOR CORP	HAUPPAUGE, NY	US	11788
11703	POWER GENERAL	CANTON, MA	US	
11708	THOMSON SEMICONDUCTORS	VELIZY VILLACOU	FR	78140
11723	CTL COMPONENTS LTD	LONDON	EG	SW19
11781	MIDLAND-ROSS CORP	LIVINGSTON, NJ	US	07039
11844	ELECTREY S A	MONTERREY	MX	64000
11892	EVOX/RIFA INC	LINCOLNSHIRE, IL	US	60015
11920	MIYAMA DENSEN CO LTD	TOKYO	JP	
11946	BKC INTERNATIONAL ELECTRONICS	LAWRENCE, MA	US	01841
11961	ALEXCO ENGINEERING SUPPLIES	COWDENBEATH	EG	KY4 9
11981	POWEREX	YOUNGWOOD, PA	US	15697
12125	SAMSUNG SEMICONDUCTOR INC	SANTA CLARA, CA	US	95054
12127	RF MONOLITHICS INC	DALLAS, TX	US	75234
12131	PRESIDIO COMPONENTS INC	SAN DIEGO, CA	US	92121
12186	DALLAS SEMICONDUCTOR CORP	DALLAS, TX	US	75244
12213	STACKPOLE ELECTRONICS INC	RALEIGH, NC	US	27620
12261	ERIE SPECIALTY PRODUCTS INC	ERIE, PA	US	16512
12340	KEMET ELECTRONICS CORPORATION	GREENVILLE, SC	US	29606
12355	INTERCONNECTION PRODUCTS INC	SANTA ANA, CA	US	92707
12382	LATTICE SEMICONDUCTOR CORP	BEAVERTON, OR	US	97006
12395	FEI MICROWAVE, INC.	SUNNYVALE, CA	US	94086
12418	OWL WIRE AND CABLE	CANASTATA, NY	US	13032
12456	WIRE PRO INC	SALEM, NJ	US	08079
12465	INTERNATIONAL POWER DEVICES	BRIGHTON, MA	US	02135
12473	AVX-RALEIGH DIVISION	RALEIGH, NC	US	27604
12482	BRADFORD ELECTRONICS INC	BRADFORD, PA	US	16701
12513	BUNNELL PLASTICS, INC	MICKLETON, NJ	US	08056
12516	MICROTRONICS ASSOCIATES PTE LTD	SINGAPORE	SG	1334
12580	SOUTH AMERICAN DEVELOPMENT CO	HYDE PARK, NY	US	12538
12656	BEYSCHLAG GMBH	HEIDE	GM	
12703	CHAMPION TECHNOLOGIES INC	FRANKLIN PARK, IL	US	60131
12830	KETEMA	BENSALEM, PA	US	19020
12845	WARTH INTERNATIONAL LTD	EAST GRINSTEAD	EG	RH192
12896	DOWKEY MICROWAVE INC	VENTURA, CA	US	93003
28480	HEWLETT PACKARD CO	CUPERTINO,CA	US	95014

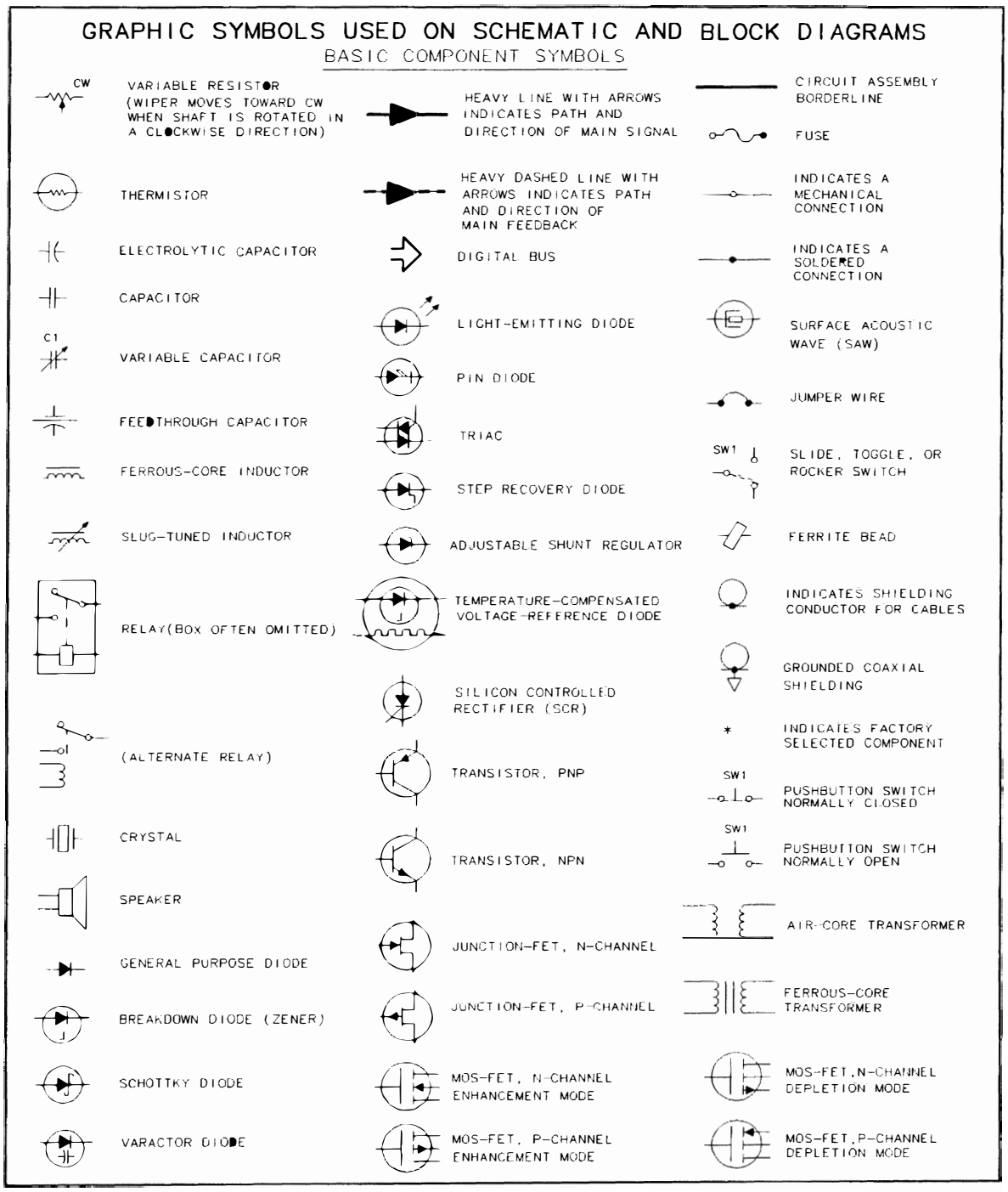

Figure 1. Graphics Symbols (1 of 2)

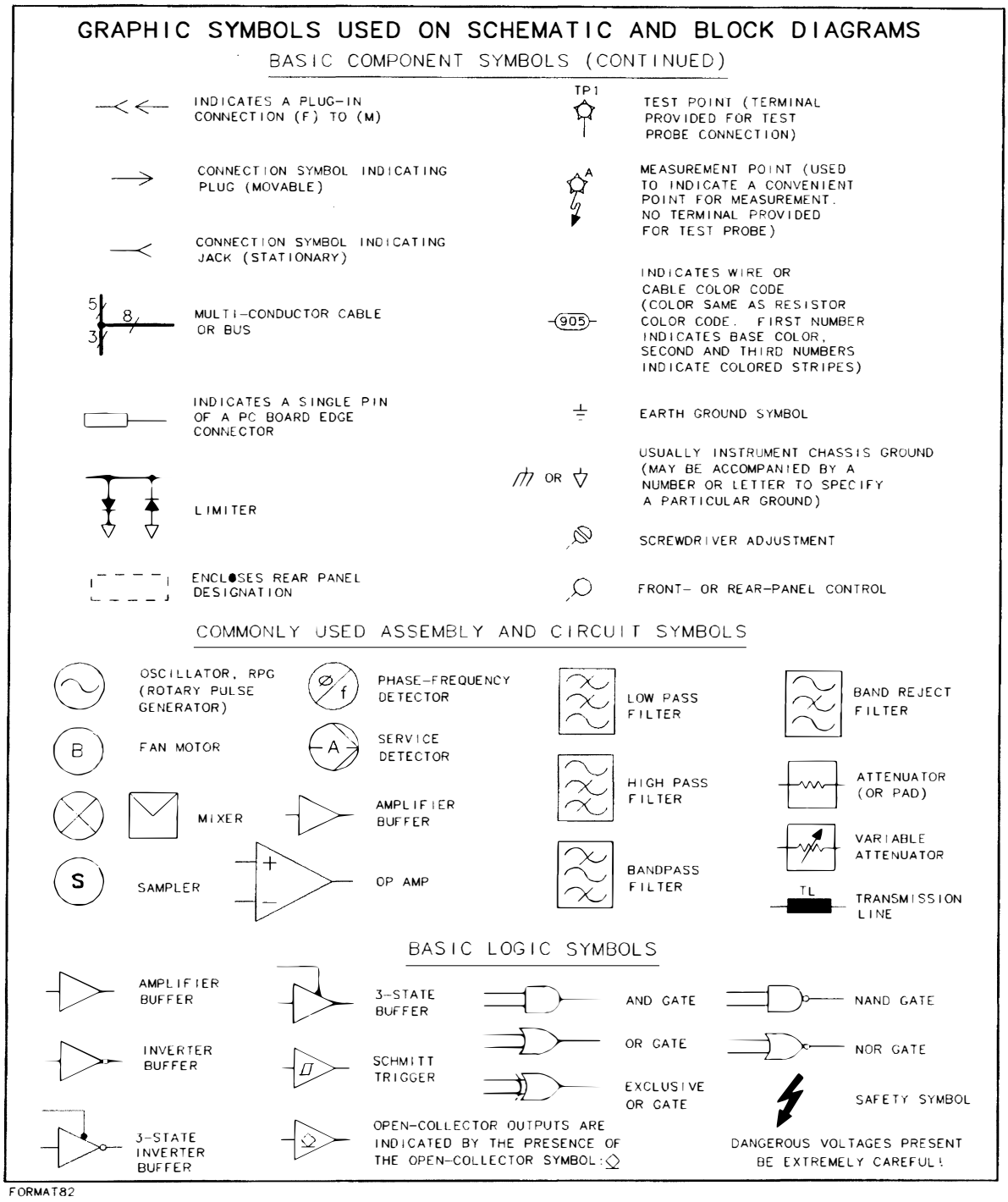

Figure 1. Graphics Symbols (2 of 2)

D-GENERAL DRAWING

SYM	REVISIONS	APPROVED	DATE
A	AS ISSUED		

EXAMPLE OF SCHEMATIC AND BLOCK DIAGRAM ELEMENTS

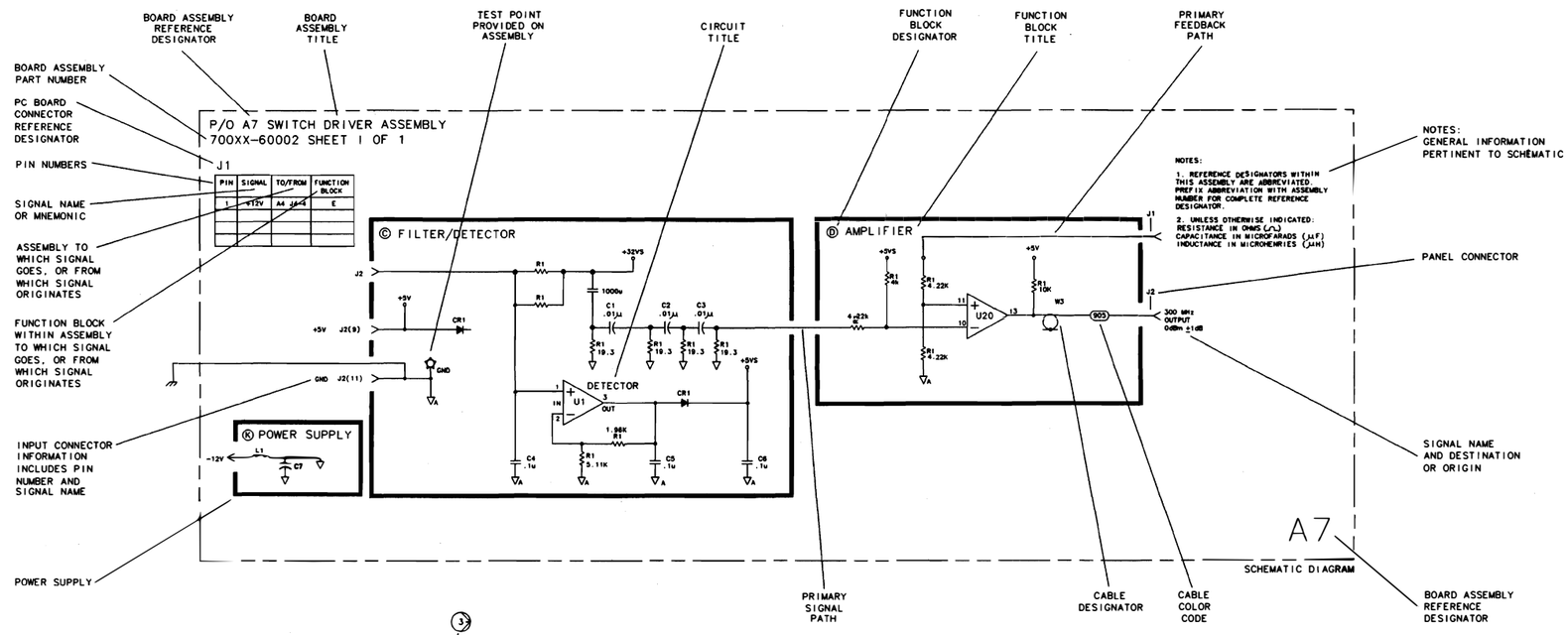

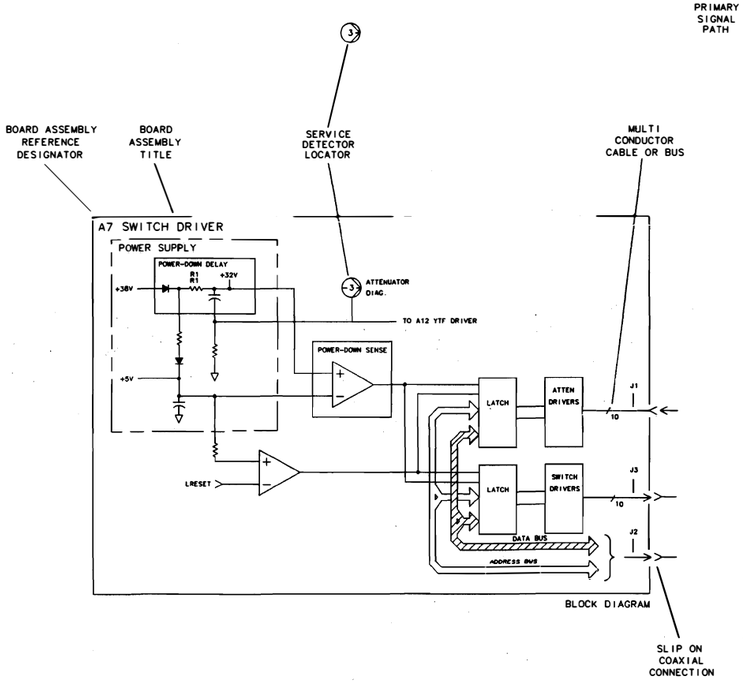

EXAMPLE ONLY

AGILENT TECHNOLOGIES RESTRICTED

THIS DOCUMENT CONTAINS CONFIDENTIAL, PROPRIETARY INFORMATION THAT IS AGILENT TECHNOLOGIES PROPERTY. DO NOT DISCLOSE TO OR DUPLICATE FOR OTHERS EXCEPT AS AUTHORIZED BY AGILENT TECHNOLOGIES.

ITEM	QTY.	PART/MATERIAL-DESCRIPTION	MAT'L-PART NO.	MAT'L-DWG NO.	MAT'L-SPEC.

DRAWN BY	DATE	SCHEMATIC AND BLOCK DIAGRAM ELEMENTS	AGILENT TECHNOLOGIES
ENGINEER/CHECKER			
RELEASE TO PROD.		Drawing filename: s1for112_d	PART NUMBER s1for112.pcl
SUPERSEDES DWG.		SCALE / SHEET 1 OF 1	D- GENERAL DRAWING

IGNORE

Component-Level Information Packet for E4401-60234

Front Panel Interface

Agilent Technologies

Agilent Part Number: E4401-90295

Printed in Malaysia April 2001

Notice

The information contained in this document is subject to change without notice. Agilent Technologies makes no warranty of any kind with regard to this material, including but not limited to, the implied warranties of merchantability and fitness for a particular purpose. Agilent Technologies shall not be liable for errors contained herein or for incidental or consequential damages in connection with the furnishing, performance, or use of this material.

© Copyright Agilent Technologies Inc. 2000, 2001
All Rights Reserved. Reproduction, adaptation, or translation without prior written permission is prohibited, except as allowed under the copyright laws.

Agilent Part Number E4401-60234
Front Panel Interface

Reference Designator	Agilent Part Number	Qty	Description	Mgr Code	Mfr Part Number
A1	1990-1865	1	OPTICAL ENCODER	01542	HRPG-ASCA#54F
A2	0960-0892	1	ROTARY ENCODER SW; INCREMENTAL TYPE; LOW	11318	EC16B2410402
C1	0160-7798	1	CAP-FXD 0.1uF +-10% 50 V CER X7R	06352	C2012X7R1H104K
C2	0160-7798	1	CAP-FXD 0.1uF +-10% 50 V CER X7R	06352	C2012X7R1H104K
C3	0160-7798	1	CAP-FXD 0.1uF +-10% 50 V CER X7R	06352	C2012X7R1H104K
C4	0160-7798	1	CAP-FXD 0.1uF +-10% 50 V CER X7R	06352	C2012X7R1H104K
C5	0160-7798	1	CAP-FXD 0.1uF +-10% 50 V CER X7R	06352	C2012X7R1H104K
C6	0160-7798	1	CAP-FXD 0.1uF +-10% 50 V CER X7R	06352	C2012X7R1H104K
C7	0160-7798	1	CAP-FXD 0.1uF +-10% 50 V CER X7R	06352	C2012X7R1H104K
C8	0180-4228	1	CAP-FXD 47uF +-20% 10 V TA	02010	TAJD476M010
C9	0160-7798	1	CAP-FXD 0.1uF +-10% 50 V CER X7R	06352	C2012X7R1H104K
C10	0160-7798	1	CAP-FXD 0.1uF +-10% 50 V CER X7R	06352	C2012X7R1H104K
C11	0160-7798	1	CAP-FXD 0.1uF +-10% 50 V CER X7R	06352	C2012X7R1H104K
C12	0160-7798	1	CAP-FXD 0.1uF +-10% 50 V CER X7R	06352	C2012X7R1H104K
C13	0160-7798	1	CAP-FXD 0.1uF +-10% 50 V CER X7R	06352	C2012X7R1H104K
C14	0160-7798	1	CAP-FXD 0.1uF +-10% 50 V CER X7R	06352	C2012X7R1H104K
C15	0160-7798	1	CAP-FXD 0.1uF +-10% 50 V CER X7R	06352	C2012X7R1H104K
C17	0180-4737	1	CAP-FXD 220uF +-20% 10 V TA	05524	593D227X0010E2
C19	0160-7798	1	CAP-FXD 0.1uF +-10% 50 V CER X7R	06352	C2012X7R1H104K
C20	0160-7798	1	CAP-FXD 0.1uF +-10% 50 V CER X7R	06352	C2012X7R1H104K
C21	0160-7798	1	CAP-FXD 0.1uF +-10% 50 V CER X7R	06352	C2012X7R1H104K
C22	0160-7855	1	CAP-FXD 33pF +-5% 50 V CER C0G	02010	06035A330JAT
C23	0160-7855	1	CAP-FXD 33pF +-5% 50 V CER C0G	02010	06035A330JAT
C24	0160-7855	1	CAP-FXD 33pF +-5% 50 V CER C0G	02010	06035A330JAT
C25	0160-7855	1	CAP-FXD 33pF +-5% 50 V CER C0G	02010	06035A330JAT
C26	0180-4287	1	CAP-FXD 10uF +-20% 35 V TA	02010	TAJD106M035
C27	0160-7798	1	CAP-FXD 0.1uF +-10% 50 V CER X7R	06352	C2012X7R1H104K
C28	0160-7798	1	CAP-FXD 0.1uF +-10% 50 V CER X7R	06352	C2012X7R1H104K

Agilent Part Number E4401-60234
Front Panel Interface

Reference Designator	Agilent Part Number	Qty	Description	Mgr Code	Mfr Part Number
CR2	1902-1591	1	DIODE-ZNR 30V 2% TO-236 (SOT-23) PD.3W	02910	BZX84-B30
CR3	1902-1591	1	DIODE-ZNR 30V 2% TO-236 (SOT-23) PD.3W	02910	BZX84-B30
CR4	1902-1501	1	DIODE-ZNR 5.1V 5% TO-236 (SOT-23) PD.3W	02910	PMBZ5231B
CR5	1906-0437	1	DIODE-ARRAY 15V MS-013AC	02910	BZA100
CR7	1906-0437	1	DIODE-ARRAY 15V MS-013AC	02910	BZA100
CR9	1901-1366	1	DIODE-PWR-S 40V 4A	02537	SK34
FL1	9135-0461	1	FILTER-SUPPRESSION EMI; SMT; WORKING	09939	NFM61R10T102M0 0-621
FL2	9135-0461	1	FILTER-SUPPRESSION EMI; SMT; WORKING	09939	NFM61R10T102M0 0-621
FL3	9135-0461	1	FILTER-SUPPRESSION EMI; SMT; WORKING	09939	NFM61R10T102M0 0-621
FL4	9135-0461	1	FILTER-SUPPRESSION EMI; SMT; WORKING	09939	NFM61R10T102M0 0-621
FL5	9135-0461	1	FILTER-SUPPRESSION EMI; SMT; WORKING	09939	NFM61R10T102M0 0-621
FL6	9135-0461	1	FILTER-SUPPRESSION EMI; SMT; WORKING	09939	NFM61R10T102M0 0-621
FL7	9135-0461	1	FILTER-SUPPRESSION EMI; SMT; WORKING	09939	NFM61R10T102M0 0-621
FL8	9135-0461	1	FILTER-SUPPRESSION EMI; SMT; WORKING	09939	NFM61R10T102M0 0-621
J1	1252-7301	1	CONN-POST TYPE 1-PIN-SPCG-MTG-END	01380	3-487952-0
J2	1252-5582	1	CONN-RECT MICRORBN 80-CKT 80-CONT	03418	15-92-2480
J3	1252-6072	1	CONNECTOR 6-PIN F CIRCULAR DIN	01380	750131-2
L1	9140-1777	1	INDUCTOR 1uH+20%-20% 7.3W-mmX7.3LG-mm	06353	636CY-1R0M
L2	9140-1784	1	INDUCTOR 100uH+-20% 9.4W-mmX12.95LG-mm	01886	DO3316-104
MAJ3	1252-7579	1	CLIP GROUNDING CLIP FOR MINI-DIN	03647	1252-7579
MAP5	1258-0141	1	JUMPER-REMOVABLE FOR 0.025 IN SQ PINS	28480	1258-0141
MP2	0380-1861	1	THREADED INSERT-STDF M2.5 X 0.45	02121	0380-1861
MP3	0380-1861	1	THREADED INSERT-STDF M2.5 X 0.45	02121	0380-1861
NONE	E4401-20234	1		28480	E4401-20234

 **Indicates factory-selected value*

Agilent Part Number E4401-60234
Front Panel Interface

Reference Designator	Agilent Part Number	Qty	Description	Mgr Code	Mfr Part Number
P1	1252-7808	1	CONN-POST TYPE .050-PIN-SPCG-MTG-END	01380	104074-5
P2	1252-7020	1	CONN-RECT MICRORBN 40-CKT 40-CONT	01380	557102-5
P3	1252-3841	1	CONN-POST TYPE .100-PIN-SPCG-MTG-END	01380	103361-3
P4	1252-7437	1	CONNECTOR 3-PIN M POWER PROBE	10456	1205
P5	1252-3839	1	CONN-POST TYPE .100-PIN-SPCG-MTG-END	13369	69190-602
P6	1252-3839	1	CONN-POST TYPE .100-PIN-SPCG-MTG-END	13369	69190-602
Q1	1855-0923	1	TRANSISTOR MOSFET P-CHAN E-MODE SI DPAK	36633	MTD20P03HDL
Q2	1855-0734	1	TRANSISTOR MOSFET 2N7002 N-CHAN E-MODE	02910	2N7002
R1	1810-1581	1	NET-RES 4 33.0 OHM 8-PIN	00746	MNR34K5AWJ330
R2	1810-1581	1	NET-RES 4 33.0 OHM 8-PIN	00746	MNR34K5AWJ330
R3	1810-1581	1	NET-RES 4 33.0 OHM 8-PIN	00746	MNR34K5AWJ330
R4	1810-1581	1	NET-RES 4 33.0 OHM 8-PIN	00746	MNR34K5AWJ330
R5	0699-3914	1	RESISTOR 34.8 +-1% .063W TKF TC0+-200	00746	MCR03-F-34R8
R6	0699-3914	1	RESISTOR 34.8 +-1% .063W TKF TC0+-200	00746	MCR03-F-34R8
R7	1810-1801	1	NET-RES 8 10.0K OHM 10-PIN	09891	CND2B10TE103J
R10	1810-1801	1	NET-RES 8 10.0K OHM 10-PIN	09891	CND2B10TE103J
R11	1810-1801	1	NET-RES 8 10.0K OHM 10-PIN	09891	CND2B10TE103J
R12	1810-1581	1	NET-RES 4 33.0 OHM 8-PIN	00746	MNR34K5AWJ330
R13	1810-1581	1	NET-RES 4 33.0 OHM 8-PIN	00746	MNR34K5AWJ330
R14	1810-1581	1	NET-RES 4 33.0 OHM 8-PIN	00746	MNR34K5AWJ330
R15	0699-3970	1	RESISTOR 10K +-1% .063W TKF TC0+-200	09891	RK73H1J1002F
R16	0699-3970	1	RESISTOR 10K +-1% .063W TKF TC0+-200	09891	RK73H1J1002F
R17	0699-3970	1	RESISTOR 10K +-1% .063W TKF TC0+-200	09891	RK73H1J1002F
R18	0699-3918	1	RESISTOR 51.1 +-1% .063W TKF TC0+-200	00746	MCR03-F-51R1
R19	0699-3970	1	RESISTOR 10K +-1% .063W TKF TC0+-200	09891	RK73H1J1002F
R20	0699-3970	1	RESISTOR 10K +-1% .063W TKF TC0+-200	09891	RK73H1J1002F
R21	0699-3947	1	RESISTOR 1K +-1% .063W TKF TC0+-200	00746	MCR03-F-1001
R23	0699-3918	1	RESISTOR 51.1 +-1% .063W TKF TC0+-200	00746	MCR03-F-51R1

**Indicates factory-selected value*

Agilent Part Number E4401-60234
Front Panel Interface

Reference Designator	Agilent Part Number	Qty	Description	Mgr Code	Mfr Part Number
R24	0699-3970	1	RESISTOR 10K +-1% .063W TKF TC0+-200	09891	RK73H1J1002F
R25	0699-3970	1	RESISTOR 10K +-1% .063W TKF TC0+-200	09891	RK73H1J1002F
R28	0699-3951	1	RESISTOR 1.47K +-1% .063W TKF TC0+-200	00746	MCR03-F-1471
R29	0699-3970	1	RESISTOR 10K +-1% .063W TKF TC0+-200	09891	RK73H1J1002F
R30	0699-3970	1	RESISTOR 10K +-1% .063W TKF TC0+-200	09891	RK73H1J1002F
R31	0699-3970	1	RESISTOR 10K +-1% .063W TKF TC0+-200	09891	RK73H1J1002F
R32	0699-3970	1	RESISTOR 10K +-1% .063W TKF TC0+-200	09891	RK73H1J1002F
R33	0699-3924	1	RESISTOR 100 +-1% .063W TKF TC0+-200	00746	MCR03-F-1000
R34	0699-3924	1	RESISTOR 100 +-1% .063W TKF TC0+-200	00746	MCR03-F-1000
R35	0699-3924	1	RESISTOR 100 +-1% .063W TKF TC0+-200	00746	MCR03-F-1000
R36	0699-3924	1	RESISTOR 100 +-1% .063W TKF TC0+-200	00746	MCR03-F-1000
R37	0699-3924	1	RESISTOR 100 +-1% .063W TKF TC0+-200	00746	MCR03-F-1000
R38	0699-3924	1	RESISTOR 100 +-1% .063W TKF TC0+-200	00746	MCR03-F-1000
R39	0699-3924	1	RESISTOR 100 +-1% .063W TKF TC0+-200	00746	MCR03-F-1000
R40	0699-3924	1	RESISTOR 100 +-1% .063W TKF TC0+-200	00746	MCR03-F-1000
R41	0699-3924	1	RESISTOR 100 +-1% .063W TKF TC0+-200	00746	MCR03-F-1000
R42	0699-3924	1	RESISTOR 100 +-1% .063W TKF TC0+-200	00746	MCR03-F-1000
R43	0699-3924	1	RESISTOR 100 +-1% .063W TKF TC0+-200	00746	MCR03-F-1000
R44	0699-3924	1	RESISTOR 100 +-1% .063W TKF TC0+-200	00746	MCR03-F-1000
R45	0699-3924	1	RESISTOR 100 +-1% .063W TKF TC0+-200	00746	MCR03-F-1000
R46	0699-3924	1	RESISTOR 100 +-1% .063W TKF TC0+-200	00746	MCR03-F-1000
R47	0699-3924	1	RESISTOR 100 +-1% .063W TKF TC0+-200	00746	MCR03-F-1000
R48	0699-3924	1	RESISTOR 100 +-1% .063W TKF TC0+-200	00746	MCR03-F-1000
R49	0699-3924	1	RESISTOR 100 +-1% .063W TKF TC0+-200	00746	MCR03-F-1000
R50	0699-3924	1	RESISTOR 100 +-1% .063W TKF TC0+-200	00746	MCR03-F-1000
R51	0699-3924	1	RESISTOR 100 +-1% .063W TKF TC0+-200	00746	MCR03-F-1000
R52	0699-3924	1	RESISTOR 100 +-1% .063W TKF TC0+-200	00746	MCR03-F-1000
R53	0699-3924	1	RESISTOR 100 +-1% .063W TKF TC0+-200	00746	MCR03-F-1000
R55	0699-3970	1	RESISTOR 10K +-1% .063W TKF TC0+-200	09891	RK73H1J1002F
R57	0699-1503	1	RESISTOR 0 CWM	05524	CRCW1206000

 **Indicates factory-selected value*

Agilent Part Number E4401-60234
Front Panel Interface

Reference Designator	Agilent Part Number	Qty	Description	Mgr Code	Mfr Part Number
R59	0699-3970	1	RESISTOR 10K +-1% .063W TKF TC0+-200	09891	RK73H1J1002F
RT1	0837-0439	1	THERMISTOR-SWITCHING CHIP; SMT; MIN/ MAX	02145	SMD150
RT2	0837-0437	1	THERMISTOR-SWITCHING	02145	SMD050
U1	1821-0559	1	IC FF BICMOS/ABT D-TYPE POS-EDGE-TRIG	01698	SN74ABT16374AD L
U2	1820-6902	1	IC ENCDR CMOS/HC PRIORITY 8-TO-3-LINE	04078	M74HC148M1R
U3	1821-0878	1	IC BFR BICMOS/ABT BUS QUAD	02910	74ABT125D
U4	1821-0559	1	IC FF BICMOS/ABT D-TYPE POS-EDGE-TRIG	01698	SN74ABT16374AD L
U5	E4401-80033	1	PROGRAM PAL	28480	E4401-80033
U6	1821-0559	1	IC FF BICMOS/ABT D-TYPE POS-EDGE-TRIG	01698	SN74ABT16374AD L
U7	E4401-80105	1		28480	E4401-80105
U8	1820-6277	1	IC SHF-RGTR CMOS/HC SYNC/ASYNC SERIAL-IN	02237	MM74HC595M
U11	1826-1737	1	IC PWR MGT-V-REG-FXD-NEG -11.5/-12.5V 3	36633	MC79M12CDTRK

D-E4401-60234-2

SYM	REVISIONS	APPROVED	DATE
A	A AS ISSUED PER EC053-15765 /KS		

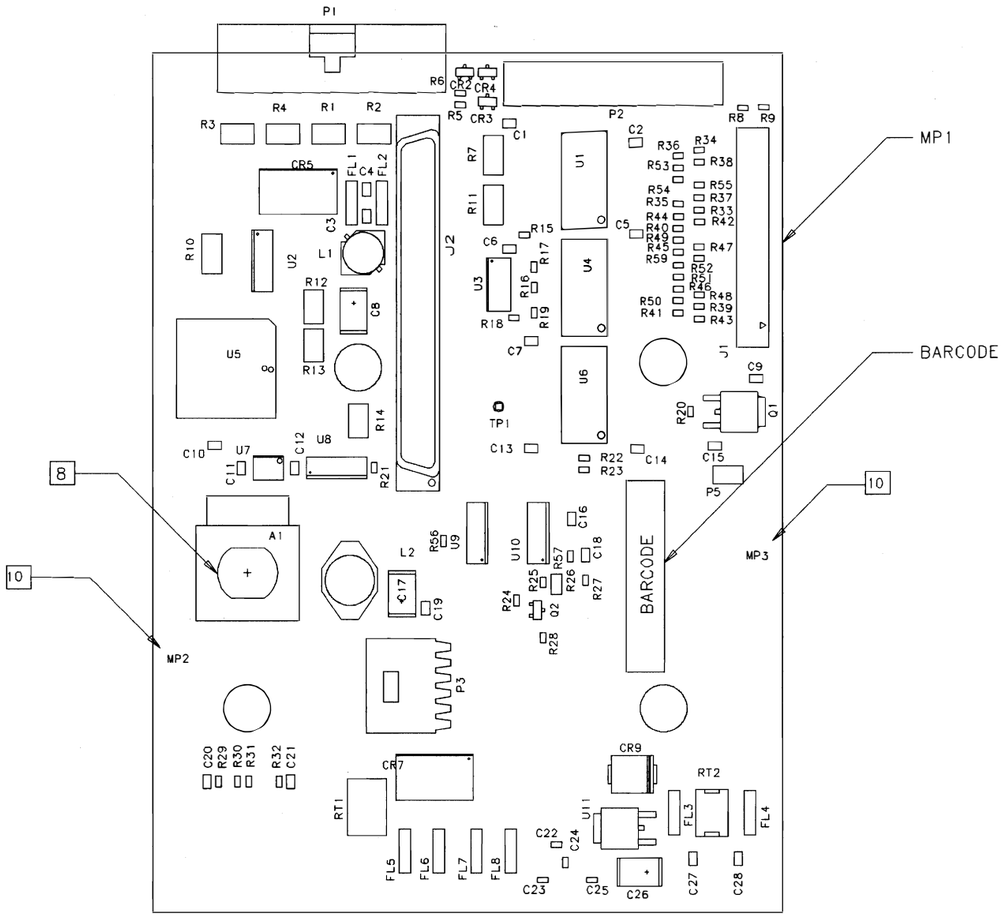

NOTES: UNLESS OTHERWISE SPECIFIED

1 INSPECT TO SPECIFICATION 930.610 ASSEMBLY ACCEPTABILITY

2 SEE MATERIAL LIST: E44 0- 6234

3 THIS ASSEMBLY USES RAW BOARD NUMBER: E4401-20234

4 THIS BOARD CONTAINS VIAS IN PADS: ☐ YES ☒ NO

5 DESIGN INTENT: ☐ TH ☐ SMT1 ☒ SMT2HS ☐ SMT6 ☐ _____

6 TEST INTENT: ☐ TOP ☒ BOTTOM ☐ BOTH ☐ NONE ☐ _____

7 THIS ASSEMBLY CONTAINS CROSSHATCHED COMPONENTS WHICH ARE NOT LOADED: ☐ YES ☒ NO

8 ATTACH A1 TO BOARD WITH THE NUT AND WASHER SUPPLIED WITH PART. INSTALL WASHER AND NUT ON BACK SIDE OF BOARD AND TORQUE TO 6 INCH-POUNDS PRIOR TO SOLDERING THE LEADS.

9 PART NUMBER 9135-(FL1-FL8) MUST NOT BE EXPOSED TO HALIDE CONTAINING ACID FLUXES.

10 PRESS IN STANDOFFS MP2 AND MP3 FROM TOPSIDE BEFORE DE-PANEL.

TOP SIDE

AGILENT TECHNOLOGIES RESTRICTED
THIS DOCUMENT CONTAINS CONFIDENTIAL, PROPRIETARY INFORMATION THAT IS AGILENT TECHNOLOGIES PROPERTY. DO NOT DISCLOSE TO OR DUPLICATE FOR OTHERS EXCEPT AS AUTHORIZED BY AGILENT TECHNOLOGIES.

UNLESS OTHERWISE SPECIFIED, DIMENSIONS ARE IN INCHES.
TOLERANCES: XX.XXX .010 XX.XX .02
THIRD ANGLE PROJECTION
DO NOT SCALE THIS DRAWING

DRAWN BY	DATE	ASSEMBLY, PWA 18 BIT COLOR NEC FPI
ENGINEER/CHECKER	DATE	
RELEASE TO PROD.	DATE	
SUPERSEDES DWG		TITLE

MENTOR FILENAME
SCALE NONE
SHEET 1 OF 2
E4401-60234 PART NUMBER
D-E4401-60234-2
Agilent

SYM	REVISIONS	APPROVED	DATE
	SEE SHEET 1 FOR REVISION HISTORY		

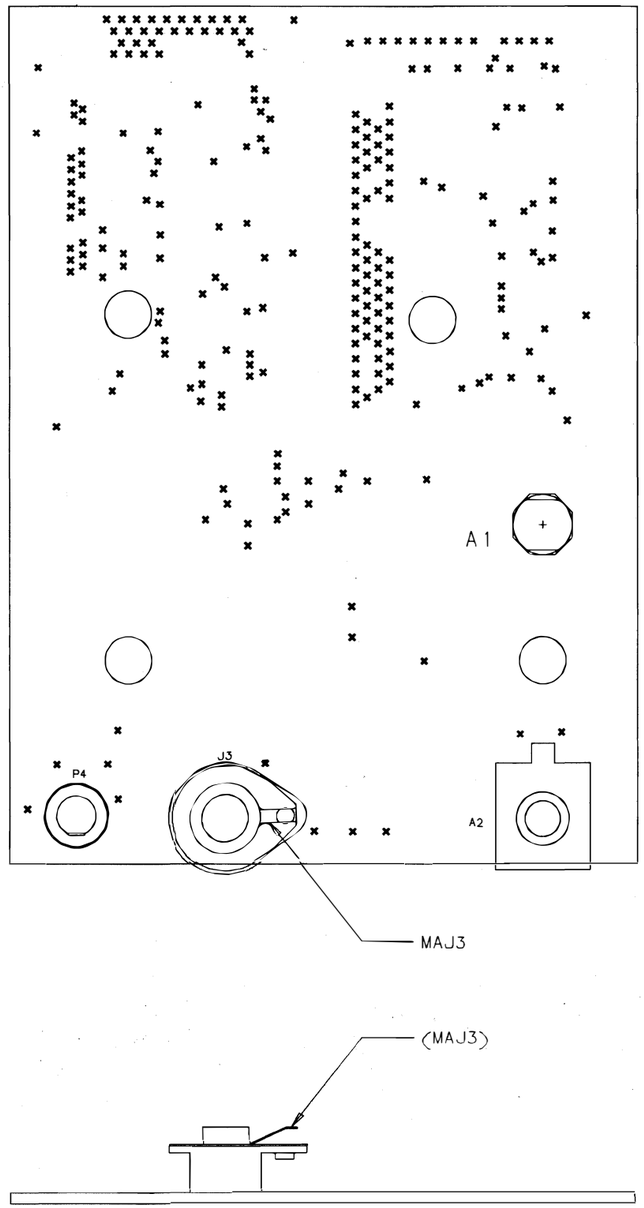

BOTTOM SIDE

AGILENT TECHNOLOGIES RESTRICTED
THIS DOCUMENT CONTAINS CONFIDENTIAL, PROPRIETARY INFORMATION THAT IS AGILENT TECHNOLOGIES PROPERTY. DO NOT DISCLOSE TO OR DUPLICATE FOR OTHERS EXCEPT AS AUTHORIZED BY AGILENT TECHNOLOGIES.

UNLESS OTHERWISE SPECIFIED, DIMENSIONS ARE IN INCHES.
TOLERANCES: XX.XXX .010, XX.XX .02
THIRD ANGLE PROJECTION
DO NOT SCALE THIS DRAWING

DRAWN BY	DATE
ENGINEER/CHECKER	DATE
RELEASE TO PROD.	DATE
SUPERSEDES DWG.	

ASSEMBLY, PWA
18 BIT COLOR NEC
FPI
TITLE

MENTOR FILENAME
SCALE NONE
SHEET 2 OF 2
E4401-60234
PART NUMBER
D-E4401-60234-2

Agilent

D-E4401-60234-1

REV	INFORMATION	APPROVED	DATE
A	A AS ISSUED PER ECO S3-1576S		

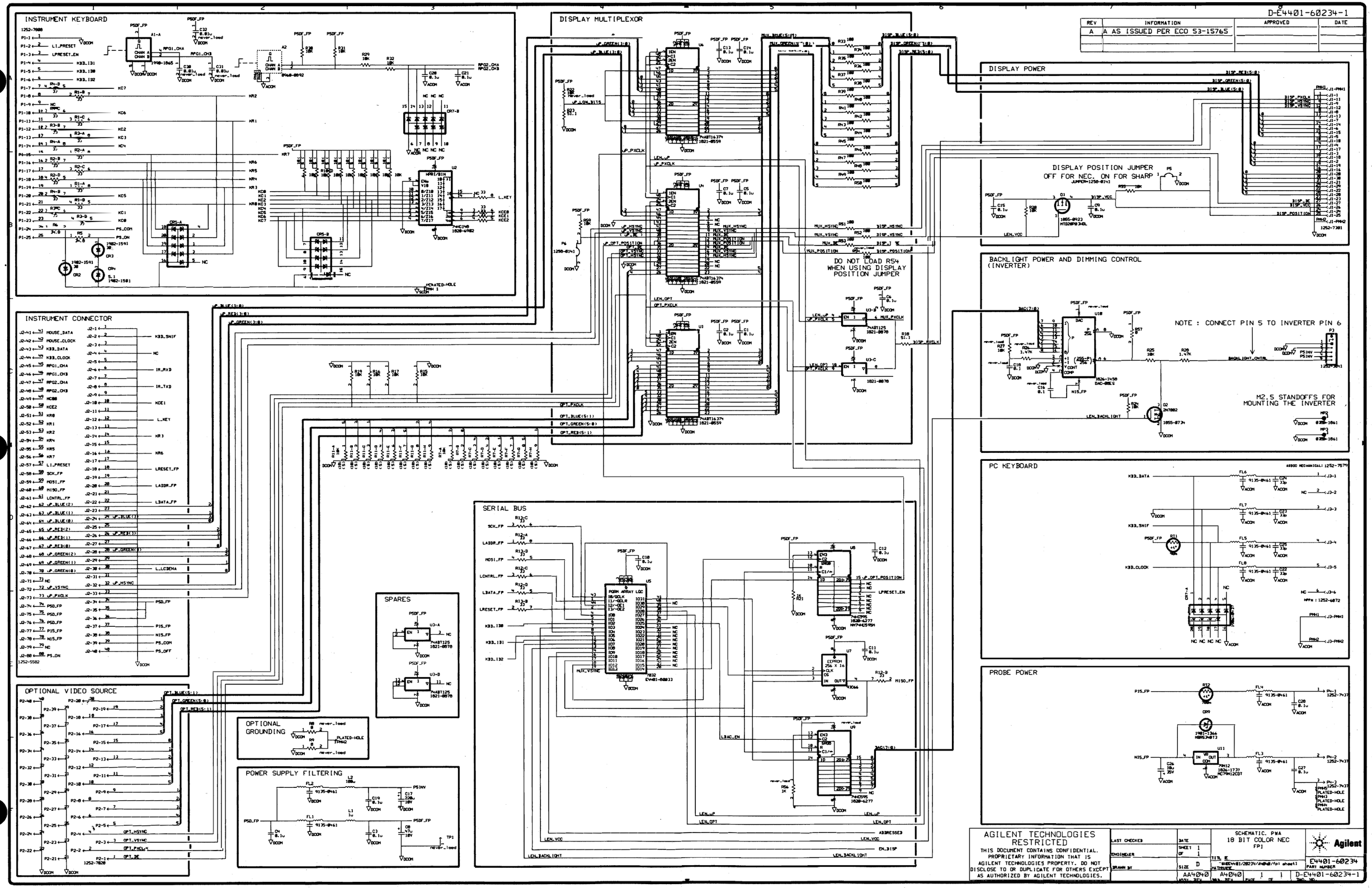

AGILENT TECHNOLOGIES
RESTRICTED
THIS DOCUMENT CONTAINS CONFIDENTIAL. PROPRIETARY INFORMATION THAT IS AGILENT TECHNOLOGIES PROPERTY. DO NOT DISCLOSE TO OR DUPLICATE FOR OTHERS EXCEPT AS AUTHORIZED BY AGILENT TECHNOLOGIES.

LAST CHECKED	DATE	SCHEMATIC, PWA 18 BIT COLOR NEC FPI	Agilent
ENGINEER	SHEET 1 OF 1	TITLE	E4401-60234 PART NUMBER
DRAWN BY	SIZE D	PATHNAME	
	A4040	A4040 1 1	D-E4401-60234-1

Component-Level Information Packet for E4401-60095

1.5 GHz Tracking Generator Control

Agilent Technologies

Agilent Part Number: E4401-90120

Printed in Malaysia April 2001

Notice

The information contained in this document is subject to change without notice. Agilent Technologies makes no warranty of any kind with regard to this material, including but not limited to, the implied warranties of merchantability and fitness for a particular purpose. Agilent Technologies shall not be liable for errors contained herein or for incidental or consequential damages in connection with the furnishing, performance, or use of this material.

© Copyright Agilent Technologies Inc. 2000, 2001
All Rights Reserved. Reproduction, adaptation, or translation without prior written permission is prohibited, except as allowed under the copyright laws.

Agilent Part Number E4401-60095
1.5 GHz Tracking Generator Control

Reference Designator	HP Part Number	Qty	Description	Mgr Code	Mfr Part Number
C1	0160-7798	1	CAP-FXD 0.1uF +-10% 50 V CER X7R	06352	C2012X7R1H104K
C2	0160-7798	1	CAP-FXD 0.1uF +-10% 50 V CER X7R	06352	C2012X7R1H104K
C3	0160-7798	1	CAP-FXD 0.1uF +-10% 50 V CER X7R	06352	C2012X7R1H104K
C4	0160-7798	1	CAP-FXD 0.1uF +-10% 50 V CER X7R	06352	C2012X7R1H104K
C5	0160-7798	1	CAP-FXD 0.1uF +-10% 50 V CER X7R	06352	C2012X7R1H104K
C6	0160-7798	1	CAP-FXD 0.1uF +-10% 50 V CER X7R	06352	C2012X7R1H104K
C7	0160-7798	1	CAP-FXD 0.1uF +-10% 50 V CER X7R	06352	C2012X7R1H104K
C8	0160-7798	1	CAP-FXD 0.1uF +-10% 50 V CER X7R	06352	C2012X7R1H104K
C9	0160-7798	1	CAP-FXD 0.1uF +-10% 50 V CER X7R	06352	C2012X7R1H104K
C10	0160-7798	1	CAP-FXD 0.1uF +-10% 50 V CER X7R	06352	C2012X7R1H104K
C11	0160-7798	1	CAP-FXD 0.1uF +-10% 50 V CER X7R	06352	C2012X7R1H104K
C12	0160-7798	1	CAP-FXD 0.1uF +-10% 50 V CER X7R	06352	C2012X7R1H104K
C13	0160-7751	1	CAP-FXD 0.01uF +-10% 50 V CER X7R	02010	06035C103KAT
C14	0160-7751	1	CAP-FXD 0.01uF +-10% 50 V CER X7R	02010	06035C103KAT
C15	0160-7751	1	CAP-FXD 0.01uF +-10% 50 V CER X7R	02010	06035C103KAT
C16	0160-7751	1	CAP-FXD 0.01uF +-10% 50 V CER X7R	02010	06035C103KAT
C17	0180-4116	1	CAP-FXD 22uF +-20% 20 V TA	02010	TAJD226M020
C18	0180-4116	1	CAP-FXD 22uF +-20% 20 V TA	02010	TAJD226M020
C19	0180-4116	1	CAP-FXD 22uF +-20% 20 V TA	02010	TAJD226M020
C20	0180-4116	1	CAP-FXD 22uF +-20% 20 V TA	02010	TAJD226M020
C21	0180-4116	1	CAP-FXD 22uF +-20% 20 V TA	02010	TAJD226M020
C22	0180-4116	1	CAP-FXD 22uF +-20% 20 V TA	02010	TAJD226M020
C23	0180-4116	1	CAP-FXD 22uF +-20% 20 V TA	02010	TAJD226M020
C24	0180-4287	1	CAP-FXD 10uF +-20% 35 V TA	02010	TAJD106M035
C25	0160-7798	1	CAP-FXD 0.1uF +-10% 50 V CER X7R	06352	C2012X7R1H104K
C26	0160-7798	1	CAP-FXD 0.1uF +-10% 50 V CER X7R	06352	C2012X7R1H104K
C27	0160-7781	1	CAP-FXD 2200pF +-10% 50 V CER X7R	02010	06035C222KAT
C28	0160-7798	1	CAP-FXD 0.1uF +-10% 50 V CER X7R	06352	C2012X7R1H104K

**Indicates factory-selected value*

Agilent Part Number E4401-60095
1.5 GHz Tracking Generator Control

Reference Designator	HP Part Number	Qty	Description	Mgr Code	Mfr Part Number
C29	0160-7835	1	CAP-FXD 100pF +-5% 50 V CER C0G	02010	06035A101JAT
C196	0180-4228	1	CAP-FXD 47uF +-20% 10 V TA	02010	TAJD476M010
C197	0160-7988	1	CAP-FXD 470pF +-5% 50 V CER C0G	06352	C1608COG1H471J
C227	0160-7751	1	CAP-FXD 0.01uF +-10% 50 V CER X7R	02010	06035C103KAT
C230	0160-7751	1	CAP-FXD 0.01uF +-10% 50 V CER X7R	02010	06035C103KAT
C231	0180-4287	1	CAP-FXD 10uF +-20% 35 V TA	02010	TAJD106M035
C232	0160-7798	1	CAP-FXD 0.1uF +-10% 50 V CER X7R	06352	C2012X7R1H104K
C233	0160-7751	1	CAP-FXD 0.01uF +-10% 50 V CER X7R	02010	06035C103KAT
C234	0160-7988	1	CAP-FXD 470pF +-5% 50 V CER C0G	06352	C1608COG1H471J
C235	0160-7988	1	CAP-FXD 470pF +-5% 50 V CER C0G	06352	C1608COG1H471J
C236	0160-7711	1	CAP-FXD 4700pF +-10% 50 V CER X7R	02010	06035C472KATRA
C237	0160-7798	1	CAP-FXD 0.1uF +-10% 50 V CER X7R	06352	C2012X7R1H104K
C238	0160-7751	1	CAP-FXD 0.01uF +-10% 50 V CER X7R	02010	06035C103KAT
C239	0160-7711	1	CAP-FXD 4700pF +-10% 50 V CER X7R	02010	06035C472KATRA
C240	0160-7988	1	CAP-FXD 470pF +-5% 50 V CER C0G	06352	C1608COG1H471J
C241	0160-7798	1	CAP-FXD 0.1uF +-10% 50 V CER X7R	06352	C2012X7R1H104K
C242	0160-7798	1	CAP-FXD 0.1uF +-10% 50 V CER X7R	06352	C2012X7R1H104K
C243	0160-7798	1	CAP-FXD 0.1uF +-10% 50 V CER X7R	06352	C2012X7R1H104K
C244	0160-7798	1	CAP-FXD 0.1uF +-10% 50 V CER X7R	06352	C2012X7R1H104K
C245	0160-7798	1	CAP-FXD 0.1uF +-10% 50 V CER X7R	06352	C2012X7R1H104K
C246	0160-7835	1	CAP-FXD 100pF +-5% 50 V CER C0G	02010	06035A101JAT
C247	0160-7798	1	CAP-FXD 0.1uF +-10% 50 V CER X7R	06352	C2012X7R1H104K
C248	0160-7809	1	CAP-FXD 0.015uF +-10% 50 V CER X7R	12340	C0603C153K5RAC
C249	0160-7748	1	CAP-FXD 1000pF +-10% 50 V CER X7R	02010	06035C102KAT
C250	0160-7835	1	CAP-FXD 100pF +-5% 50 V CER C0G	02010	06035A101JAT
C251	0160-7855	1	CAP-FXD 33pF +-5% 50 V CER C0G	02010	06035A330JAT
C252	0160-7855	1	CAP-FXD 33pF +-5% 50 V CER C0G	02010	06035A330JAT
C253	0160-7835	1	CAP-FXD 100pF +-5% 50 V CER C0G	02010	06035A101JAT
C254	0160-7835	1	CAP-FXD 100pF +-5% 50 V CER C0G	02010	06035A101JAT
C255	0180-4287	1	CAP-FXD 10uF +-20% 35 V TA	02010	TAJD106M035

 **Indicates factory-selected value*

Agilent Part Number E4401-60095
1.5 GHz Tracking Generator Control

Reference Designator	HP Part Number	Qty	Description	Mgr Code	Mfr Part Number
C256	0160-7712	1	CAP-FXD 1500pF +-10% 50 V CER X7R	02010	06035C152KATRA
C257	0160-7858	1	CAP-FXD 390pF +-10% 50 V CER X7R	02010	06035C391KAT
C258	0160-7835	1	CAP-FXD 100pF +-5% 50 V CER C0G	02010	06035A101JAT
C259	0180-3751	1	CAP-FXD 1uF +-20% 35 V TA	02010	TAJB105M035
C260	0160-7712	1	CAP-FXD 1500pF +-10% 50 V CER X7R	02010	06035C152KATRA
C261	0160-7712	1	CAP-FXD 1500pF +-10% 50 V CER X7R	02010	06035C152KATRA
C262	0160-7712	1	CAP-FXD 1500pF +-10% 50 V CER X7R	02010	06035C152KATRA
C263	0160-7986	1	CAP-FXD 390pF +-5% 50 V CER C0G	06352	C1608COG1H391J
C264	0160-7986	1	CAP-FXD 390pF +-5% 50 V CER C0G	06352	C1608COG1H391J
C265	0160-7712	1	CAP-FXD 1500pF +-10% 50 V CER X7R	02010	06035C152KATRA
C266	0160-7858	1	CAP-FXD 390pF +-10% 50 V CER X7R	02010	06035C391KAT
C267	0160-7835	1	CAP-FXD 100pF +-5% 50 V CER C0G	02010	06035A101JAT
C268	0160-7835	1	CAP-FXD 100pF +-5% 50 V CER C0G	02010	06035A101JAT
C269	0160-7858	1	CAP-FXD 390pF +-10% 50 V CER X7R	02010	06035C391KAT
C270	0160-7858	1	CAP-FXD 390pF +-10% 50 V CER X7R	02010	06035C391KAT
C271	0160-7835	1	CAP-FXD 100pF +-5% 50 V CER C0G	02010	06035A101JAT
C272	0160-7835	1	CAP-FXD 100pF +-5% 50 V CER C0G	02010	06035A101JAT
C273	0180-4287	1	CAP-FXD 10uF +-20% 35 V TA	02010	TAJD106M035
C274	0160-7835	1	CAP-FXD 100pF +-5% 50 V CER C0G	02010	06035A101JAT
C275	0180-4287	1	CAP-FXD 10uF +-20% 35 V TA	02010	TAJD106M035
C276	0160-7986	1	CAP-FXD 390pF +-5% 50 V CER C0G	06352	C1608COG1H391J
C277	0160-7986	1	CAP-FXD 390pF +-5% 50 V CER C0G	06352	C1608COG1H391J
C278	0160-7986	1	CAP-FXD 390pF +-5% 50 V CER C0G	06352	C1608COG1H391J
C279	0160-7798	1	CAP-FXD 0.1uF +-10% 50 V CER X7R	06352	C2012X7R1H104K
C280	0160-7798	1	CAP-FXD 0.1uF +-10% 50 V CER X7R	06352	C2012X7R1H104K
C281	0160-7986	1	CAP-FXD 390pF +-5% 50 V CER C0G	06352	C1608COG1H391J
C282	0160-7986	1	CAP-FXD 390pF +-5% 50 V CER C0G	06352	C1608COG1H391J
C283	0160-7986	1	CAP-FXD 390pF +-5% 50 V CER C0G	06352	C1608COG1H391J
C296	0160-7751	1	CAP-FXD 0.01uF +-10% 50 V CER X7R	02010	06035C103KAT
C297	0160-7856	1	CAP-FXD 330pF +-10% 50 V CER X7R	02010	06035C331KAT

Agilent Part Number E4401-60095
1.5 GHz Tracking Generator Control

Reference Designator	HP Part Number	Qty	Description	Mgr Code	Mfr Part Number
C298	0160-7856	1	CAP-FXD 330pF +-10% 50 V CER X7R	02010	06035C331KAT
C299	0180-3755	1	CAP-FXD 33uF +-20% 10 V TA	02010	TAJD336M010
C300	0160-7798	1	CAP-FXD 0.1uF +-10% 50 V CER X7R	06352	C2012X7R1H104K
C301	0160-7751	1	CAP-FXD 0.01uF +-10% 50 V CER X7R	02010	06035C103KAT
C302	0160-7798	1	CAP-FXD 0.1uF +-10% 50 V CER X7R	06352	C2012X7R1H104K
C303	0160-7751	1	CAP-FXD 0.01uF +-10% 50 V CER X7R	02010	06035C103KAT
C304	0180-3755	1	CAP-FXD 33uF +-20% 10 V TA	02010	TAJD336M010
C305	0160-7798	1	CAP-FXD 0.1uF +-10% 50 V CER X7R	06352	C2012X7R1H104K
C306	0160-7798	1	CAP-FXD 0.1uF +-10% 50 V CER X7R	06352	C2012X7R1H104K
C307	0160-7798	1	CAP-FXD 0.1uF +-10% 50 V CER X7R	06352	C2012X7R1H104K
C308	0160-7798	1	CAP-FXD 0.1uF +-10% 50 V CER X7R	06352	C2012X7R1H104K
C309	0160-7798	1	CAP-FXD 0.1uF +-10% 50 V CER X7R	06352	C2012X7R1H104K
C310	0160-7798	1	CAP-FXD 0.1uF +-10% 50 V CER X7R	06352	C2012X7R1H104K
C311	0160-7798	1	CAP-FXD 0.1uF +-10% 50 V CER X7R	06352	C2012X7R1H104K
C312	0160-7798	1	CAP-FXD 0.1uF +-10% 50 V CER X7R	06352	C2012X7R1H104K
C313	0160-7855	1	CAP-FXD 33pF +-5% 50 V CER C0G	02010	06035A330JAT
C314	0160-7855	1	CAP-FXD 33pF +-5% 50 V CER C0G	02010	06035A330JAT
C315	0160-7855	1	CAP-FXD 33pF +-5% 50 V CER C0G	02010	06035A330JAT
C316	0160-7855	1	CAP-FXD 33pF +-5% 50 V CER C0G	02010	06035A330JAT
C317	0160-7855	1	CAP-FXD 33pF +-5% 50 V CER C0G	02010	06035A330JAT
C318	0160-7855	1	CAP-FXD 33pF +-5% 50 V CER C0G	02010	06035A330JAT
C319	0160-7855	1	CAP-FXD 33pF +-5% 50 V CER C0G	02010	06035A330JAT
C320	0160-7855	1	CAP-FXD 33pF +-5% 50 V CER C0G	02010	06035A330JAT
C321	0160-7855	1	CAP-FXD 33pF +-5% 50 V CER C0G	02010	06035A330JAT
C322	0160-7855	1	CAP-FXD 33pF +-5% 50 V CER C0G	02010	06035A330JAT
C323	0160-7748	1	CAP-FXD 1000pF +-10% 50 V CER X7R	02010	06035C102KAT
C324	0160-7835	1	CAP-FXD 100pF +-5% 50 V CER C0G	02010	06035A101JAT
C325	0160-7835	1	CAP-FXD 100pF +-5% 50 V CER C0G	02010	06035A101JAT
C326	0160-7835	1	CAP-FXD 100pF +-5% 50 V CER C0G	02010	06035A101JAT
C327	0160-7835	1	CAP-FXD 100pF +-5% 50 V CER C0G	02010	06035A101JAT

 **Indicates factory-selected value*

Agilent Part Number E4401-60095
1.5 GHz Tracking Generator Control

Reference Designator	HP Part Number	Qty	Description	Mgr Code	Mfr Part Number
C328	0160-7835	1	CAP-FXD 100pF +-5% 50 V CER C0G	02010	06035A101JAT
C329	0160-7835	1	CAP-FXD 100pF +-5% 50 V CER C0G	02010	06035A101JAT
C330	0180-3755	1	CAP-FXD 33uF +-20% 10 V TA	02010	TAJD336M010
C331	0160-7835	1	CAP-FXD 100pF +-5% 50 V CER C0G	02010	06035A101JAT
C332	0180-4287	1	CAP-FXD 10uF +-20% 35 V TA	02010	TAJD106M035
C333	0180-4287	1	CAP-FXD 10uF +-20% 35 V TA	02010	TAJD106M035
C334	0160-7835	1	CAP-FXD 100pF +-5% 50 V CER C0G	02010	06035A101JAT
C340	0160-7798	1	CAP-FXD 0.1uF +-10% 50 V CER X7R	06352	C2012X7R1H104K
C341	0160-7986	1	CAP-FXD 390pF +-5% 50 V CER C0G	06352	C1608COG1H391J
C342	0160-7751	1	CAP-FXD 0.01uF +-10% 50 V CER X7R	02010	06035C103KAT
C343	0160-7986	1	CAP-FXD 390pF +-5% 50 V CER C0G	06352	C1608COG1H391J
C344	0160-7986	1	CAP-FXD 390pF +-5% 50 V CER C0G	06352	C1608COG1H391J
C345	0160-7798	1	CAP-FXD 0.1uF +-10% 50 V CER X7R	06352	C2012X7R1H104K
C346	0160-7986	1	CAP-FXD 390pF +-5% 50 V CER C0G	06352	C1608COG1H391J
C347	0160-7831	1	CAP-FXD 1.2pF +-20.83% 50 V CER C0G	02010	06035A1R2CAT
C348	0160-7986	1	CAP-FXD 390pF +-5% 50 V CER C0G	06352	C1608COG1H391J
C350	0160-7834	1	CAP-FXD 10pF +-5% 50 V CER C0G	02010	06035A100JAT
C351	0160-7986	1	CAP-FXD 390pF +-5% 50 V CER C0G	06352	C1608COG1H391J
C352	0160-7834	1	CAP-FXD 10pF +-5% 50 V CER C0G	02010	06035A100JAT
C353	0160-7986	1	CAP-FXD 390pF +-5% 50 V CER C0G	06352	C1608COG1H391J
C354	0160-7986	1	CAP-FXD 390pF +-5% 50 V CER C0G	06352	C1608COG1H391J
C355	0160-7751	1	CAP-FXD 0.01uF +-10% 50 V CER X7R	02010	06035C103KAT
C356	0160-7986	1	CAP-FXD 390pF +-5% 50 V CER C0G	06352	C1608COG1H391J
C357	0160-7751	1	CAP-FXD 0.01uF +-10% 50 V CER X7R	02010	06035C103KAT
C358	0160-7986	1	CAP-FXD 390pF +-5% 50 V CER C0G	06352	C1608COG1H391J
C359	0180-4287	1	CAP-FXD 10uF +-20% 35 V TA	02010	TAJD106M035
C360	0160-7798	1	CAP-FXD 0.1uF +-10% 50 V CER X7R	06352	C2012X7R1H104K
C361	0160-7986	1	CAP-FXD 390pF +-5% 50 V CER C0G	06352	C1608COG1H391J
C362	0160-7831	1	CAP-FXD 1.2pF +-20.83% 50 V CER C0G	02010	06035A1R2CAT
C363	0160-7986	1	CAP-FXD 390pF +-5% 50 V CER C0G	06352	C1608COG1H391J

**Indicates factory-selected value*

Agilent Part Number E4401-60095
1.5 GHz Tracking Generator Control

Reference Designator	HP Part Number	Qty	Description	Mgr Code	Mfr Part Number
C364	0160-7834	1	CAP-FXD 10pF +-5% 50 V CER C0G	02010	06035A100JAT
C365	0160-7798	1	CAP-FXD 0.1uF +-10% 50 V CER X7R	06352	C2012X7R1H104K
C366	0160-7986	1	CAP-FXD 390pF +-5% 50 V CER C0G	06352	C1608COG1H391J
C367	0160-7834	1	CAP-FXD 10pF +-5% 50 V CER C0G	02010	06035A100JAT
C368	0160-7986	1	CAP-FXD 390pF +-5% 50 V CER C0G	06352	C1608COG1H391J
C369	0160-7986	1	CAP-FXD 390pF +-5% 50 V CER C0G	06352	C1608COG1H391J
C370	0160-7751	1	CAP-FXD 0.01uF +-10% 50 V CER X7R	02010	06035C103KAT
C371	0160-7986	1	CAP-FXD 390pF +-5% 50 V CER C0G	06352	C1608COG1H391J
C372	0160-7986	1	CAP-FXD 390pF +-5% 50 V CER C0G	06352	C1608COG1H391J
C373	0160-7798	1	CAP-FXD 0.1uF +-10% 50 V CER X7R	06352	C2012X7R1H104K
C374	0160-7986	1	CAP-FXD 390pF +-5% 50 V CER C0G	06352	C1608COG1H391J
C375	0160-7831	1	CAP-FXD 1.2pF +-20.83% 50 V CER C0G	02010	06035A1R2CAT
C376	0160-7986	1	CAP-FXD 390pF +-5% 50 V CER C0G	06352	C1608COG1H391J
C378	0160-7834	1	CAP-FXD 10pF +-5% 50 V CER C0G	02010	06035A100JAT
C379	0160-7986	1	CAP-FXD 390pF +-5% 50 V CER C0G	06352	C1608COG1H391J
C380	0160-7834	1	CAP-FXD 10pF +-5% 50 V CER C0G	02010	06035A100JAT
C381	0160-7986	1	CAP-FXD 390pF +-5% 50 V CER C0G	06352	C1608COG1H391J
C382	0160-7986	1	CAP-FXD 390pF +-5% 50 V CER C0G	06352	C1608COG1H391J
C383	0160-7834	1	CAP-FXD 10pF +-5% 50 V CER C0G	02010	06035A100JAT
C384	0160-7751	1	CAP-FXD 0.01uF +-10% 50 V CER X7R	02010	06035C103KAT
C385	0160-7798	1	CAP-FXD 0.1uF +-10% 50 V CER X7R	06352	C2012X7R1H104K
C386	0160-7798	1	CAP-FXD 0.1uF +-10% 50 V CER X7R	06352	C2012X7R1H104K
C387	0160-7986	1	CAP-FXD 390pF +-5% 50 V CER C0G	06352	C1608COG1H391J
C388	0160-7860	1	CAP-FXD 4.7pF +-5.31% 50 V CER C0G	02010	06035A4R7CAT
C389	0180-4287	1	CAP-FXD 10uF +-20% 35 V TA	02010	TAJD106M035
C390	0160-7834	1	CAP-FXD 10pF +-5% 50 V CER C0G	02010	06035A100JAT
C504	0160-7798	1	CAP-FXD 0.1uF +-10% 50 V CER X7R	06352	C2012X7R1H104K
C505	0160-7798	1	CAP-FXD 0.1uF +-10% 50 V CER X7R	06352	C2012X7R1H104K
C506	0160-7798	1	CAP-FXD 0.1uF +-10% 50 V CER X7R	06352	C2012X7R1H104K
C507	0160-7798	1	CAP-FXD 0.1uF +-10% 50 V CER X7R	06352	C2012X7R1H104K

 **Indicates factory-selected value*

Agilent Part Number E4401-60095
1.5 GHz Tracking Generator Control

Reference Designator	HP Part Number	Qty	Description	Mgr Code	Mfr Part Number
C508	0160-7798	1	CAP-FXD 0.1uF +-10% 50 V CER X7R	06352	C2012X7R1H104K
C509	0160-7798	1	CAP-FXD 0.1uF +-10% 50 V CER X7R	06352	C2012X7R1H104K
C510	0160-7798	1	CAP-FXD 0.1uF +-10% 50 V CER X7R	06352	C2012X7R1H104K
C511	0160-7798	1	CAP-FXD 0.1uF +-10% 50 V CER X7R	06352	C2012X7R1H104K
C512	0160-7798	1	CAP-FXD 0.1uF +-10% 50 V CER X7R	06352	C2012X7R1H104K
C513	0160-7798	1	CAP-FXD 0.1uF +-10% 50 V CER X7R	06352	C2012X7R1H104K
C514	0160-7798	1	CAP-FXD 0.1uF +-10% 50 V CER X7R	06352	C2012X7R1H104K
C515	0160-7798	1	CAP-FXD 0.1uF +-10% 50 V CER X7R	06352	C2012X7R1H104K
C516	0160-7986	1	CAP-FXD 390pF +-5% 50 V CER C0G	06352	C1608COG1H391J
C517	0160-7855	1	CAP-FXD 33pF +-5% 50 V CER C0G	02010	06035A330JAT
C518	0160-7855	1	CAP-FXD 33pF +-5% 50 V CER C0G	02010	06035A330JAT
C519	0160-7855	1	CAP-FXD 33pF +-5% 50 V CER C0G	02010	06035A330JAT
C520	0160-7751	1	CAP-FXD 0.01uF +-10% 50 V CER X7R	02010	06035C103KAT
C521	0160-7751	1	CAP-FXD 0.01uF +-10% 50 V CER X7R	02010	06035C103KAT
C522	0160-7835	1	CAP-FXD 100pF +-5% 50 V CER C0G	02010	06035A101JAT
C523	0160-7835	1	CAP-FXD 100pF +-5% 50 V CER C0G	02010	06035A101JAT
C524	0160-7835	1	CAP-FXD 100pF +-5% 50 V CER C0G	02010	06035A101JAT
C525	0160-7835	1	CAP-FXD 100pF +-5% 50 V CER C0G	02010	06035A101JAT
C526	0160-7835	1	CAP-FXD 100pF +-5% 50 V CER C0G	02010	06035A101JAT
C527	0160-7835	1	CAP-FXD 100pF +-5% 50 V CER C0G	02010	06035A101JAT
CR1	1901-1227	1	DIODE-SWITCHING 75V 200MA 6NS TO-236	02910	BAS16
CR30	1906-0291	1	DIODE-DUAL 70V 100MA T0-236AA	02910	BAV99
CR32	1990-1267	1	LED-LAMP LUM-INT8MCD IF30MA-MAX	14139	AM23ID-F
CR33	1990-1267	1	LED-LAMP LUM-INT8MCD IF30MA-MAX	14139	AM23ID-F
CR34	0122-0189	1	DIODE-VVC 2.1PF 14% C 1/C28-MIN7.5	28480	0122-0189
CR35	0122-0189	1	DIODE-VVC 2.1PF 14% C 1/C28-MIN7.5	28480	0122-0189
CR36	0122-0189	1	DIODE-VVC 2.1PF 14% C 1/C28-MIN7.5	28480	0122-0189
CR37	0122-0189	1	DIODE-VVC 2.1PF 14% C 1/C28-MIN7.5	28480	0122-0189
CR38	0122-0189	1	DIODE-VVC 2.1PF 14% C 1/C28-MIN7.5	28480	0122-0189
CR39	0122-0189	1	DIODE-VVC 2.1PF 14% C 1/C28-MIN7.5	28480	0122-0189

Agilent Part Number E4401-60095
1.5 GHz Tracking Generator Control

Reference Designator	HP Part Number	Qty	Description	Mgr Code	Mfr Part Number
CR40	0122-0189	1	DIODE-VVC 2.1PF 14% C 1/C28-MIN7.5	28480	0122-0189
CR41	0122-0189	1	DIODE-VVC 2.1PF 14% C 1/C28-MIN7.5	28480	0122-0189
CR42	1900-0273	1	DIODE-PIN	01542	HSMP-3892-BLK
CR43	1901-1227	1	DIODE-SWITCHING 75V 200MA 6NS TO-236	02910	BAS16
CR44	1900-0309	1	DIODE-SCHOTTKY SM SIG	01542	HSMS-2827
CR45	1901-1227	1	DIODE-SWITCHING 75V 200MA 6NS TO-236	02910	BAS16
CR46	1900-0273	1	DIODE-PIN	01542	HSMP-3892-BLK
CR47	1902-1592	1	DIODE-ZNR 5.1V 5% TO-236 (SOT-23)	02910	BZX84C5V1
CR48	1900-0273	1	DIODE-PIN	01542	HSMP-3892-BLK
CR49	1901-1227	1	DIODE-SWITCHING 75V 200MA 6NS TO-236	02910	BAS16
CR50	1902-1544	1	DIODE-ZNR 10V 5% TO-236 (SOT-23) PD.35W	02910	BZX84C10
CR51	1900-0309	1	DIODE-SCHOTTKY SM SIG	01542	HSMS-2827
CR52	1901-1227	1	DIODE-SWITCHING 75V 200MA 6NS TO-236	02910	BAS16
CR53	1900-0273	1	DIODE-PIN	01542	HSMP-3892-BLK
CR54	1900-0273	1	DIODE-PIN	01542	HSMP-3892-BLK
CR55	1900-0309	1	DIODE-SCHOTTKY SM SIG	01542	HSMS-2827
CR56	1901-1227	1	DIODE-SWITCHING 75V 200MA 6NS TO-236	02910	BAS16
CR57	1900-0273	1	DIODE-PIN	01542	HSMP-3892-BLK
CR58	1902-1592	1	DIODE-ZNR 5.1V 5% TO-236 (SOT-23)	02910	BZX84C5V1
CR59	1902-1544	1	DIODE-ZNR 10V 5% TO-236 (SOT-23) PD.35W	02910	BZX84C10
CR64	1901-1227	1	DIODE-SWITCHING 75V 200MA 6NS TO-236	02910	BAS16
E3	9170-1584	1	CORE-SHIELDING BEAD	06352	MMZ2012Y102B
E4	9170-1584	1	CORE-SHIELDING BEAD	06352	MMZ2012Y102B
E5	9170-1584	1	CORE-SHIELDING BEAD	06352	MMZ2012Y102B
FL1	9135-0461	1	FILTER-SUPPRESSIONEMI;SMT;WORKING	09939	NFM61R10T102M0 0-621
FL23	9135-0461	1	FILTER-SUPPRESSIONEMI;SMT;WORKING	09939	NFM61R10T102M0 0-621
FL24	9135-0461	1	FILTER-SUPPRESSIONEMI;SMT;WORKING	09939	NFM61R10T102M0 0-621

 **Indicates factory-selected value*

Agilent Part Number E4401-60095
1.5 GHz Tracking Generator Control

Reference Designator	HP Part Number	Qty	Description	Mgr Code	Mfr Part Number
FL25	9135-0461	1	FILTER-SUPPRESSION EMI;SMT;WORKING	09939	NFM61R10T102M0 0-621
FL26	9135-0461	1	FILTER-SUPPRESSIONEMI;SMT;WORKING	09939	NFM61R10T102M0 0-621
FL27	9135-0461	1	FILTER-SUPPRESSIONEMI;SMT;WORKING	09939	NFM61R10T102M0 0-621
J1	1252-5906	1	CONN-RECT MICRORBN 100-CKT 100-CONT	01380	2-557101-5
J2	1252-7168	1	CONN-POST TYPE 1-PIN-SPCG-MTG-END	03418	52089-3010
J3	1250-2471	1	CONNECTOR-RFMCX,SM-SNP-ONFEMALE	01380	829558-3
J5	1250-0257	1	CONNECTOR-RF SMB MALE PC-W-STDFS 50-OHM	01380	413990-3
L1	9140-1736	1	INDUCTOR 47uH +20% -20% 7.3W-mmX7.3LG-mm	06353	E636CY-470M-P3
L2	9140-1736	1	INDUCTOR 47uH +20% -20% 7.3W-mmX7.3LG-mm	06353	E636CY-470M-P3
L3	9140-1736	1	INDUCTOR 47uH +20% -20% 7.3W-mmX7.3LG-mm	06353	E636CY-470M-P3
L4	9140-1736	1	INDUCTOR 47uH +20% -20% 7.3W-mmX7.3LG-mm	06353	E636CY-470M-P3
L5	9140-1736	1	INDUCTOR 47uH +20% -20% 7.3W-mmX7.3LG-mm	06353	E636CY-470M-P3
L6	9140-1736	1	INDUCTOR 47uH +20% -20% 7.3W-mmX7.3LG-mm	06353	E636CY-470M-P3
L24	9140-1109	1	INDUCTOR4.7uH+-5% 3.4W-mmX4.8LG-mm	06352	NL453232-4R7J
L25	9140-1109	1	INDUCTOR4.7uH+-5% 3.4W-mmX4.8LG-mm	06352	NL453232-4R7J
L27	9140-1206	1	INDUCTOR 100nH+-5% 2.8W-mmX3.4LG-mm	06352	NL322522T-R10J
L28	9140-1206	1	INDUCTOR 100nH+-5% 2.8W-mmX3.4LG-mm	06352	NL322522T-R10J
L29	9140-1205	1	INDUCTOR 82nH +-5% 2.8W-mmX3.4LG-mm Q27	09891	KL32TE082J
L30	9140-1205	1	INDUCTOR 82nH +-5% 2.8W-mmX3.4LG-mm Q27	09891	KL32TE082J
L31	9140-1206	1	INDUCTOR 100nH+-5% 2.8W-mmX3.4LG-mm	06352	NL322522T-R10J
L32	9140-1206	1	INDUCTOR 100nH+-5% 2.8W-mmX3.4LG-mm	06352	NL322522T-R10J
L33	9140-1206	1	INDUCTOR 100nH+-5% 2.8W-mmX3.4LG-mm	06352	NL322522T-R10J

Agilent Part Number E4401-60095
1.5 GHz Tracking Generator Control

Reference Designator	HP Part Number	Qty	Description	Mgr Code	Mfr Part Number
L36	9140-1113	1	INDUCTOR 10uH +-5% 3.4W-mmX4.8LG-mm Q50	28480	9140-1113
L37	9140-1113	1	INDUCTOR 10uH +-5% 3.4W-mmX4.8LG-mm Q50	28480	9140-1113
L38	9140-1206	1	INDUCTOR 100nH+-5% 2.8W-mmX3.4LG-mm	06352	NL322522T-R10J
L39	9140-1206	1	INDUCTOR 100nH+-5% 2.8W-mmX3.4LG-mm	06352	NL322522T-R10J
L40	9140-1206	1	INDUCTOR 100nH+-5% 2.8W-mmX3.4LG-mm	06352	NL322522T-R10J
L44	9140-1206	1	INDUCTOR 100nH+-5% 2.8W-mmX3.4LG-mm	06352	NL322522T-R10J
L45	9140-1206	1	INDUCTOR 100nH+-5% 2.8W-mmX3.4LG-mm	06352	NL322522T-R10J
L46	9140-1206	1	INDUCTOR 100nH+-5% 2.8W-mmX3.4LG-mm	06352	NL322522T-R10J
L49	9140-1206	1	INDUCTOR 100nH+-5% 2.8W-mmX3.4LG-mm	06352	NL322522T-R10J
L50	9140-1206	1	INDUCTOR 100nH+-5% 2.8W-mmX3.4LG-mm	06352	NL322522T-R10J
L51	9140-1206	1	INDUCTOR 100nH+-5% 2.8W-mmX3.4LG-mm	06352	NL322522T-R10J
Q1	1854-1037	1	TRANSISTOR NPN SI TO-236AA PD350MW	00746	SST3904T116
Q2	1854-1037	1	TRANSISTOR NPN SI TO-236AA PD350MW	00746	SST3904T116
Q3	1855-0800	1	TRANSISTOR MOSFET N-CHAN E-MODE TO-252AA	36633	MTD3055VL
Q4	1854-1037	1	TRANSISTOR NPN SI TO-236AA PD350MW	00746	SST3904T116
Q5	1855-0800	1	TRANSISTOR MOSFET N-CHAN E-MODE TO-252AA	36633	MTD3055VL
Q6	1853-0567	1	TRANSISTOR PNP SI SOT-23 (TO-236AB)	00746	SST3906T116
Q7	1855-0800	1	TRANSISTOR MOSFET N-CHAN E-MODE TO-252AA	36633	MTD3055VL
Q8	1853-0567	1	TRANSISTOR PNP SI SOT-23 (TO-236AB)	00746	SST3906T116
Q9	1855-0800	1	TRANSISTOR MOSFET N-CHAN E-MODE TO-252AA	36633	MTD3055VL
Q10	1854-1270	1	TRANSISTOR NPN SI TO-261AA (SOT-223)	02910	PZT2222A
Q45	1853-0580	1	TRANSISTOR PNP SI SOT-23 (TO-236AB)	00746	SST4403
Q46	1854-1188	1	TRANSISTOR NPN SI SOT-23 (TO-236AB)	11699	CMPT4401
Q48	1853-0567	1	TRANSISTOR PNP SI SOT-23 (TO-236AB)	00746	SST3906T116
Q49	1853-0567	1	TRANSISTOR PNP SI SOT-23 (TO-236AB)	00746	SST3906T116
Q50	1853-0567	1	TRANSISTOR PNP SI SOT-23 (TO-236AB)	00746	SST3906T116

 **Indicates factory-selected value*

Agilent Part Number E4401-60095
1.5 GHz Tracking Generator Control

Reference Designator	HP Part Number	Qty	Description	Mgr Code	Mfr Part Number
Q51	1853-0568	1	TRANSISTOR PNP SI TO-236AA PD350MW	36633	MMBT5087LT1
Q52	1854-1270	1	TRANSISTOR NPN SI TO-261AA (SOT-223)	02910	PZT2222A
Q53	1854-1298	1	TRANSISTOR NPN SI PD500MW	01542	AT-41486
Q54	1853-0580	1	TRANSISTOR PNP SI SOT-23 (TO-236AB)	00746	SST4403
Q59	1854-1037	1	TRANSISTOR NPN SI TO-236AA PD350MW	00746	SST3904T116
Q60	1853-0580	1	TRANSISTOR PNP SI SOT-23 (TO-236AB)	00746	SST4403
Q61	1854-1037	1	TRANSISTOR NPN SI TO-236AA PD350MW	00746	SST3904T116
Q62	1853-0580	1	TRANSISTOR PNP SI SOT-23 (TO-236AB)	00746	SST4403
Q63	1854-1037	1	TRANSISTOR NPN SI TO-236AA PD350MW	00746	SST3904T116
Q64	1853-0580	1	TRANSISTOR PNP SI SOT-23 (TO-236AB)	00746	SST4403
Q77	1855-0734	1	TRANSISTOR MOSFET 2N7002 N-CHAN E-MODE	02910	2N7002
Q78	1854-1037	1	TRANSISTOR NPN SI TO-236AA PD350MW	00746	SST3904T116
Q79	1854-1188	1	TRANSISTOR NPN SI SOT-23 (TO-236AB)	11699	CMPT4401
Q80	1854-1188	1	TRANSISTOR NPN SI SOT-23 (TO-236AB)	11699	CMPT4401
Q81	1854-1188	1	TRANSISTOR NPN SI SOT-23 (TO-236AB)	11699	CMPT4401
Q82	1854-1188	1	TRANSISTOR NPN SI SOT-23 (TO-236AB)	11699	CMPT4401
R1	1810-1581	1	NET-RES 4 33.0 OHM 8-PIN	00746	MNR34K5AWJ330
R2	0699-3932	1	RESISTOR 215 +-1% .063W TKF TC0+-200	00746	MCR03-F-2150
R3	1810-1581	1	NET-RES 4 33.0 OHM 8-PIN	00746	MNR34K5AWJ330
R4	1810-1581	1	NET-RES 4 33.0 OHM 8-PIN	00746	MNR34K5AWJ330
R5	1810-1578	1	NET-RES 4 1.0K OHM 8-PIN	00746	MNR34K5ABJ102
R7	0699-3913	1	RESISTOR 31.6 +-1% .063W TKF TC0+-200	09891	RK73H1J31R6F
R8	0699-3964	1	RESISTOR 5.11K +-1% .063W TKF TC0+-200	09891	RK73H1J5111F
R9	0699-3964	1	RESISTOR 5.11K +-1% .063W TKF TC0+-200	09891	RK73H1J5111F
R10	0699-3924	1	RESISTOR 100 +-1% .063W TKF TC0+-200	00746	MCR03-F-1000
R11	0699-3955	1	RESISTOR 2.15K +-1% .063W TKF TC0+-200	09891	RK73H1J2151F
R12	0699-3924	1	RESISTOR 100 +-1% .063W TKF TC0+-200	00746	MCR03-F-1000
R13	0699-3924	1	RESISTOR 100 +-1% .063W TKF TC0+-200	00746	MCR03-F-1000
R14	0699-3924	1	RESISTOR 100 +-1% .063W TKF TC0+-200	00746	MCR03-F-1000

**Indicates factory-selected value*

Agilent Part Number E4401-60095
1.5 GHz Tracking Generator Control

Reference Designator	HP Part Number	Qty	Description	Mgr Code	Mfr Part Number
R15	0699-3924	1	RESISTOR 100 +-1% .063W TKF TC0+-200	00746	MCR03-F-1000
R16	0699-3970	1	RESISTOR 10K +-1% .063W TKF TC0+-200	09891	RK73H1J1002F
R17	0699-3986	1	RESISTOR 46.4K +-1% .063W TKF TC0+-200	09891	RK73H1J4642F
R18	0699-3995	1	RESISTOR 121K +-1% .063W TKF TC0+-200	09891	RK73H1J1213F
R19	0699-3970	1	RESISTOR 10K +-1% .063W TKF TC0+-200	09891	RK73H1J1002F
R20	0699-3986	1	RESISTOR 46.4K +-1% .063W TKF TC0+-200	09891	RK73H1J4642F
R21	0699-3995	1	RESISTOR 121K +-1% .063W TKF TC0+-200	09891	RK73H1J1213F
R22	0699-3970	1	RESISTOR 10K +-1% .063W TKF TC0+-200	09891	RK73H1J1002F
R23	0699-3987	1	RESISTOR 51.1K +-1% .063W TKF TC0+-200	09891	RK73H1J5112F
R24	0699-3987	1	RESISTOR 51.1K +-1% .063W TKF TC0+-200	09891	RK73H1J5112F
R25	0699-3987	1	RESISTOR 51.1K +-1% .063W TKF TC0+-200	09891	RK73H1J5112F
R26	0699-3970	1	RESISTOR 10K +-1% .063W TKF TC0+-200	09891	RK73H1J1002F
R27	0699-3987	1	RESISTOR 51.1K +-1% .063W TKF TC0+-200	09891	RK73H1J5112F
R28	0699-3987	1	RESISTOR 51.1K +-1% .063W TKF TC0+-200	09891	RK73H1J5112F
R29	0699-3987	1	RESISTOR 51.1K +-1% .063W TKF TC0+-200	09891	RK73H1J5112F
R30	0699-3970	1	RESISTOR 10K +-1% .063W TKF TC0+-200	09891	RK73H1J1002F
R31	0699-3918	1	RESISTOR 51.1 +-1% .063W TKF TC0+-200	00746	MCR03-F-51R1
R32	0699-3918	1	RESISTOR 51.1 +-1% .063W TKF TC0+-200	00746	MCR03-F-51R1
R33	0699-3970	1	RESISTOR 10K +-1% .063W TKF TC0+-200	09891	RK73H1J1002F
R34	0699-1427	1	RESISTOR 316 +-1% .125W TKF TC0+-100	09891	RK73H2BT3160F
R35	0699-1427	1	RESISTOR 316 +-1% .125W TKF TC0+-100	09891	RK73H2BT3160F
R36	0699-1427	1	RESISTOR 316 +-1% .125W TKF TC0+-100	09891	RK73H2BT3160F
R37	0699-3964	1	RESISTOR 5.11K +-1% .063W TKF TC0+-200	09891	RK73H1J5111F
R38	0699-3947	1	RESISTOR 1K +-1% .063W TKF TC0+-200	00746	MCR03-F-1001
R39	0699-3947	1	RESISTOR 1K +-1% .063W TKF TC0+-200	00746	MCR03-F-1001
R40	0699-3947	1	RESISTOR 1K +-1% .063W TKF TC0+-200	00746	MCR03-F-1001
R41	0699-3947	1	RESISTOR 1K +-1% .063W TKF TC0+-200	00746	MCR03-F-1001
R42	0699-1367	1	RESISTOR 90.9 +-1% .125W TKF TC0+-100	05524	CRCW120690R9F
R43	0699-3941	1	RESISTOR 511 +-1% .063W TKF TC0+-200	00746	MCR03-F-5110
R44	0699-3914	1	RESISTOR 34.8 +-1% .063W TKF TC0+-200	00746	MCR03-F-34R8

 **Indicates factory-selected value*

Agilent Part Number E4401-60095
1.5 GHz Tracking Generator Control

Reference Designator	HP Part Number	Qty	Description	Mgr Code	Mfr Part Number
R224	0699-3947	1	RESISTOR 1K +-1% .063W TKF TC0+-200	00746	MCR03-F-1001
R225	0699-3960	1	RESISTOR 3.48K +-1% .063W TKF TC0+-200	09891	RK73H1J3481F
R268	0699-3955	1	RESISTOR 2.15K +-1% .063W TKF TC0+-200	09891	RK73H1J2151F
R270	0699-1415	1	RESISTOR 100 +-1% .125W TKF TC0+-100	05524	CRCW12061000F
R271	0699-3918	1	RESISTOR 51.1 +-1% .063W TKF TC0+-200	00746	MCR03-F-51R1
R273	0699-3970	1	RESISTOR 10K +-1% .063W TKF TC0+-200	09891	RK73H1J1002F
R275	0699-3955	1	RESISTOR 2.15K +-1% .063W TKF TC0+-200	09891	RK73H1J2151F
R277	0699-3901	1	RESISTOR 10 +-1% .063W TKF TC0+-200	00746	MCR03-F-10R0
R279	0699-3948	1	RESISTOR 1.1K +-1% .063W TKF TC0+-200	00746	MCR03-F-1101
R280	0699-3942	1	RESISTOR 619 +-1% .063W TKF TC0+-200	00746	MCR03-F-6190
R282	0699-3942	1	RESISTOR 619 +-1% .063W TKF TC0+-200	00746	MCR03-F-6190
R283	0699-3947	1	RESISTOR 1K +-1% .063W TKF TC0+-200	00746	MCR03-F-1001
R284	0699-3956	1	RESISTOR 2.37K +-1% .063W TKF TC0+-200	09891	RK73H1J2371F
R285	0699-3942	1	RESISTOR 619 +-1% .063W TKF TC0+-200	00746	MCR03-F-6190
R287	0699-3942	1	RESISTOR 619 +-1% .063W TKF TC0+-200	00746	MCR03-F-6190
R288	0699-3956	1	RESISTOR 2.37K +-1% .063W TKF TC0+-200	09891	RK73H1J2371F
R290	0699-3951	1	RESISTOR 1.47K +-1% .063W TKF TC0+-200	00746	MCR03-F-1471
R291	0699-3993	1	RESISTOR 100K +-1% .063W TKF TC0+-200	09891	RK73H1J1003F
R292	0699-3976	1	RESISTOR 17.8K +-1% .063W TKF TC0+-200	09891	RK73H1J1782F
R293	0699-3945	1	RESISTOR 825 +-1% .063W TKF TC0+-200	00746	MCR03-F-8250
R294	0699-3947	1	RESISTOR 1K +-1% .063W TKF TC0+-200	00746	MCR03-F-1001
R295	0699-3939	1	RESISTOR 422 +-1% .063W TKF TC0+-200	09891	RK73H1J4220F
R297	0699-3932	1	RESISTOR 215 +-1% .063W TKF TC0+-200	00746	MCR03-F-2150
R298	0699-3918	1	RESISTOR 51.1 +-1% .063W TKF TC0+-200	00746	MCR03-F-51R1
R299	0699-3918	1	RESISTOR 51.1 +-1% .063W TKF TC0+-200	00746	MCR03-F-51R1
R301	0699-3963	1	RESISTOR 4.64K +-1% .063W TKF TC0+-200	09891	RK73H1J4641F
R302	0699-3981	1	RESISTOR 28.7K +-1% .063W TKF TC0+-200	09891	RK73H1J2872F
R303	0699-3970	1	RESISTOR 10K +-1% .063W TKF TC0+-200	09891	RK73H1J1002F
R304	0699-3970	1	RESISTOR 10K +-1% .063W TKF TC0+-200	09891	RK73H1J1002F
R305	0699-3976	1	RESISTOR 17.8K +-1% .063W TKF TC0+-200	09891	RK73H1J1782F

**Indicates factory-selected value*

Agilent Part Number E4401-60095
1.5 GHz Tracking Generator Control

Reference Designator	HP Part Number	Qty	Description	Mgr Code	Mfr Part Number
R306	0699-3951	1	RESISTOR 1.47K +-1% .063W TKF TC0+-200	00746	MCR03-F-1471
R307	0699-3951	1	RESISTOR 1.47K +-1% .063W TKF TC0+-200	00746	MCR03-F-1471
R308	0699-3976	1	RESISTOR 17.8K +-1% .063W TKF TC0+-200	09891	RK73H1J1782F
R309	0699-3970	1	RESISTOR 10K +-1% .063W TKF TC0+-200	09891	RK73H1J1002F
R310	0699-3970	1	RESISTOR 10K +-1% .063W TKF TC0+-200	09891	RK73H1J1002F
R311	0699-3970	1	RESISTOR 10K +-1% .063W TKF TC0+-200	09891	RK73H1J1002F
R312	0699-3970	1	RESISTOR 10K +-1% .063W TKF TC0+-200	09891	RK73H1J1002F
R313	0699-3984	1	RESISTOR 38.3K +-1% .063W TKF TC0+-200	09891	RK73H1J3832F
R314	0699-3984	1	RESISTOR 38.3K +-1% .063W TKF TC0+-200	09891	RK73H1J3832F
R315	0699-3993	1	RESISTOR 100K +-1% .063W TKF TC0+-200	09891	RK73H1J1003F
R316	0699-3964	1	RESISTOR 5.11K +-1% .063W TKF TC0+-200	09891	RK73H1J5111F
R317	0699-3990	1	RESISTOR 75K +-1% .063W TKF TC0+-200	09891	RK73H1J7502F
R318	0699-3973	1	RESISTOR 13.3K +-1% .063W TKF TC0+-200	09891	RK73H1J1332F
R319	0699-4010	1	RESISTOR 511K +-1% .063W TKF TC0+-200	09891	RK73H1J5113F
R320	0699-3970	1	RESISTOR 10K +-1% .063W TKF TC0+-200	09891	RK73H1J1002F
R321	0699-3972	1	RESISTOR 12.1K +-1% .063W TKF TC0+-200	09891	RK73H1J1212F
R322	0699-1374	1	RESISTOR 1.78K +-1% .125W TKF TC0+-100	09891	RK73H2BT1781F
R323	0699-3951	1	RESISTOR 1.47K +-1% .063W TKF TC0+-200	00746	MCR03-F-1471
R324	0699-3932	1	RESISTOR 215 +-1% .063W TKF TC0+-200	00746	MCR03-F-2150
R325	0699-3924	1	RESISTOR 100 +-1% .063W TKF TC0+-200	00746	MCR03-F-1000
R326	0699-3964	1	RESISTOR 5.11K +-1% .063W TKF TC0+-200	09891	RK73H1J5111F
R327	0699-3970	1	RESISTOR 10K +-1% .063W TKF TC0+-200	09891	RK73H1J1002F
R328	0699-1365	1	RESISTOR 75 +-1% .125W TKF TC0+-100	05524	CRCW120675R0F
R329	0699-3922	1	RESISTOR 82.5 +-1% .063W TKF TC0+-200	09891	RK73H1J82R5F
R330	0699-3929	1	RESISTOR 162 +-1% .063W TKF TC0+-200	09891	RK73H1J1620F
R331	0699-3913	1	RESISTOR 31.6 +-1% .063W TKF TC0+-200	09891	RK73H1J31R6F
R332	0699-1367	1	RESISTOR 90.9 +-1% .125W TKF TC0+-100	05524	CRCW120690R9F
R333	0699-1367	1	RESISTOR 90.9 +-1% .125W TKF TC0+-100	05524	CRCW120690R9F
R334	0699-1367	1	RESISTOR 90.9 +-1% .125W TKF TC0+-100	05524	CRCW120690R9F
R335	0699-1367	1	RESISTOR 90.9 +-1% .125W TKF TC0+-100	05524	CRCW120690R9F

 **Indicates factory-selected value*

Agilent Part Number E4401-60095
1.5 GHz Tracking Generator Control

Reference Designator	HP Part Number	Qty	Description	Mgr Code	Mfr Part Number
R336	0699-1367	1	RESISTOR 90.9 +-1% .125W TKF TC0+-100	05524	CRCW120690R9F
R337	0699-1364	1	RESISTOR 68.1 +-1% .125W TKF TC0+-100	05524	CRCW120668R1F
R338	0699-1364	1	RESISTOR 68.1 +-1% .125W TKF TC0+-100	05524	CRCW120668R1F
R339	0699-1364	1	RESISTOR 68.1 +-1% .125W TKF TC0+-100	05524	CRCW120668R1F
R340	0699-1364	1	RESISTOR 68.1 +-1% .125W TKF TC0+-100	05524	CRCW120668R1F
R341	0699-3935	1	RESISTOR 287 +-1% .063W TKF TC0+-200	00746	MCR03-F-2870
R342	0699-3908	1	RESISTOR 19.6 +-1% .063W TKF TC0+-200	09891	RK73H1J19R6F
R343	0699-3947	1	RESISTOR 1K +-1% .063W TKF TC0+-200	00746	MCR03-F-1001
R344	0699-3907	1	RESISTOR 17.8 +-1% .063W TKF TC0+-200	09891	RK73H1J17R8F
R345	0699-3935	1	RESISTOR 287 +-1% .063W TKF TC0+-200	00746	MCR03-F-2870
R346	0699-3941	1	RESISTOR 511 +-1% .063W TKF TC0+-200	00746	MCR03-F-5110
R347	0699-3918	1	RESISTOR 51.1 +-1% .063W TKF TC0+-200	00746	MCR03-F-51R1
R348	0699-3918	1	RESISTOR 51.1 +-1% .063W TKF TC0+-200	00746	MCR03-F-51R1
R349	0699-3934	1	RESISTOR 261 +-1% .063W TKF TC0+-200	09891	RK73H1J2610F
R350	0699-3926	1	RESISTOR 121 +-1% .063W TKF TC0+-200	00746	MCR03-F-1210
R351	0699-3926	1	RESISTOR 121 +-1% .063W TKF TC0+-200	00746	MCR03-F-1210
R352	0699-3918	1	RESISTOR 51.1 +-1% .063W TKF TC0+-200	00746	MCR03-F-51R1
R353	0699-3941	1	RESISTOR 511 +-1% .063W TKF TC0+-200	00746	MCR03-F-5110
R354	0699-1365	1	RESISTOR 75 +-1% .125W TKF TC0+-100	05524	CRCW120675R0F
R355	0699-1365	1	RESISTOR 75 +-1% .125W TKF TC0+-100	05524	CRCW120675R0F
R356	0699-1365	1	RESISTOR 75 +-1% .125W TKF TC0+-100	05524	CRCW120675R0F
R357	0699-1365	1	RESISTOR 75 +-1% .125W TKF TC0+-100	05524	CRCW120675R0F
R358	0699-3916	1	RESISTOR 42.2 +-1% .063W TKF TC0+-200	09891	RK73H1J42R2F
R359	0699-3927	1	RESISTOR 133 +-1% .063W TKF TC0+-200	00746	MCR03-F-1330
R360	0699-3941	1	RESISTOR 511 +-1% .063W TKF TC0+-200	00746	MCR03-F-5110
R361	0699-1365	1	RESISTOR 75 +-1% .125W TKF TC0+-100	05524	CRCW120675R0F
R362	0699-1365	1	RESISTOR 75 +-1% .125W TKF TC0+-100	05524	CRCW120675R0F
R363	0699-1365	1	RESISTOR 75 +-1% .125W TKF TC0+-100	05524	CRCW120675R0F
R364	0699-1365	1	RESISTOR 75 +-1% .125W TKF TC0+-100	05524	CRCW120675R0F
R365	0699-3941	1	RESISTOR 511 +-1% .063W TKF TC0+-200	00746	MCR03-F-5110

Agilent Part Number E4401-60095
1.5 GHz Tracking Generator Control

Reference Designator	HP Part Number	Qty	Description	Mgr Code	Mfr Part Number
R366	0699-3927	1	RESISTOR 133 +-1% .063W TKF TC0+-200	00746	MCR03-F-1330
R375	0699-3970	1	RESISTOR 10K +-1% .063W TKF TC0+-200	09891	RK73H1J1002F
R380	0699-1361	1	RESISTOR 51.1 +-1% .125W TKF TC0+-100	05524	CRCW120651R1F
R381	0699-3982	1	RESISTOR 31.6K +-1% .063W TKF TC0+-200	09891	RK73H1J3162F
R382	0699-3978	1	RESISTOR 21.5K +-1% .063W TKF TC0+-200	09891	RK73H1J2152F
R383	0699-3924	1	RESISTOR 100 +-1% .063W TKF TC0+-200	00746	MCR03-F-1000
R384	0699-3947	1	RESISTOR 1K +-1% .063W TKF TC0+-200	00746	MCR03-F-1001
R391	0699-3956	1	RESISTOR 2.37K +-1% .063W TKF TC0+-200	09891	RK73H1J2371F
R392	0699-3947	1	RESISTOR 1K +-1% .063W TKF TC0+-200	00746	MCR03-F-1001
R393	0699-3964	1	RESISTOR 5.11K +-1% .063W TKF TC0+-200	09891	RK73H1J5111F
R394	0699-3930	1	RESISTOR 178 +-1% .063W TKF TC0+-200	00746	MCR03-F-1780
R395	0699-3961	1	RESISTOR 3.83K +-1% .063W TKF TC0+-200	09891	RK73H1J3831F
R396	0699-3974	1	RESISTOR 14.7K +-1% .063W TKF TC0+-200	00746	MCR03-F-1472
R397	0699-1358	1	RESISTOR 38.3 +-1% .125W TKF TC0+-100	09891	RK73H2BT38R3F
R398	0699-1358	1	RESISTOR 38.3 +-1% .125W TKF TC0+-100	09891	RK73H2BT38R3F
R399	0699-1358	1	RESISTOR 38.3 +-1% .125W TKF TC0+-100	09891	RK73H2BT38R3F
R400	0699-3974	1	RESISTOR 14.7K +-1% .063W TKF TC0+-200	00746	MCR03-F-1472
R401	0699-1358	1	RESISTOR 38.3 +-1% .125W TKF TC0+-100	09891	RK73H2BT38R3F
R402	0699-1358	1	RESISTOR 38.3 +-1% .125W TKF TC0+-100	09891	RK73H2BT38R3F
R403	0699-3968	1	RESISTOR 8.25K +-1% .063W TKF TC0+-200	09891	RK73H1J8251F
R404	0699-3367	1	RESISTOR 5.62K +-1% .0625W TKF TC0+-200	00746	MCR03-F-5621
R405	0699-3907	1	RESISTOR 17.8 +-1% .063W TKF TC0+-200	09891	RK73H1J17R8F
R406	0699-3924	1	RESISTOR 100 +-1% .063W TKF TC0+-200	00746	MCR03-F-1000
R407	0699-3913	1	RESISTOR 31.6 +-1% .063W TKF TC0+-200	09891	RK73H1J31R6F
R408	0699-3961	1	RESISTOR 3.83K +-1% .063W TKF TC0+-200	09891	RK73H1J3831F
R409	0699-3964	1	RESISTOR 5.11K +-1% .063W TKF TC0+-200	09891	RK73H1J5111F
R410	0699-3930	1	RESISTOR 178 +-1% .063W TKF TC0+-200	00746	MCR03-F-1780
R411	0699-3961	1	RESISTOR 3.83K +-1% .063W TKF TC0+-200	09891	RK73H1J3831F
R412	0699-3941	1	RESISTOR 511 +-1% .063W TKF TC0+-200	00746	MCR03-F-5110
R413	0699-3974	1	RESISTOR 14.7K +-1% .063W TKF TC0+-200	00746	MCR03-F-1472

 **Indicates factory-selected value*

Agilent Part Number E4401-60095
1.5 GHz Tracking Generator Control

Reference Designator	HP Part Number	Qty	Description	Mgr Code	Mfr Part Number
R414	0699-1358	1	RESISTOR 38.3 +-1% .125W TKF TC0+-100	09891	RK73H2BT38R3F
R415	0699-3970	1	RESISTOR 10K +-1% .063W TKF TC0+-200	09891	RK73H1J1002F
R416	0699-1358	1	RESISTOR 38.3 +-1% .125W TKF TC0+-100	09891	RK73H2BT38R3F
R417	0699-3974	1	RESISTOR 14.7K +-1% .063W TKF TC0+-200	00746	MCR03-F-1472
R418	0699-1358	1	RESISTOR 38.3 +-1% .125W TKF TC0+-100	09891	RK73H2BT38R3F
R419	0699-1358	1	RESISTOR 38.3 +-1% .125W TKF TC0+-100	09891	RK73H2BT38R3F
R420	0699-1358	1	RESISTOR 38.3 +-1% .125W TKF TC0+-100	09891	RK73H2BT38R3F
R421	0699-3964	1	RESISTOR 5.11K +-1% .063W TKF TC0+-200	09891	RK73H1J5111F
R422	0699-3964	1	RESISTOR 5.11K +-1% .063W TKF TC0+-200	09891	RK73H1J5111F
R423	0699-3924	1	RESISTOR 100 +-1% .063W TKF TC0+-200	00746	MCR03-F-1000
R424	0699-3935	1	RESISTOR 287 +-1% .063W TKF TC0+-200	00746	MCR03-F-2870
R425	0699-3961	1	RESISTOR 3.83K +-1% .063W TKF TC0+-200	09891	RK73H1J3831F
R426	0699-3913	1	RESISTOR 31.6 +-1% .063W TKF TC0+-200	09891	RK73H1J31R6F
R427	0699-3930	1	RESISTOR 178 +-1% .063W TKF TC0+-200	00746	MCR03-F-1780
R428	0699-3961	1	RESISTOR 3.83K +-1% .063W TKF TC0+-200	09891	RK73H1J3831F
R429	0699-3964	1	RESISTOR 5.11K +-1% .063W TKF TC0+-200	09891	RK73H1J5111F
R430	0699-3974	1	RESISTOR 14.7K +-1% .063W TKF TC0+-200	00746	MCR03-F-1472
R431	0699-1358	1	RESISTOR 38.3 +-1% .125W TKF TC0+-100	09891	RK73H2BT38R3F
R432	0699-1358	1	RESISTOR 38.3 +-1% .125W TKF TC0+-100	09891	RK73H2BT38R3F
R433	0699-1358	1	RESISTOR 38.3 +-1% .125W TKF TC0+-100	09891	RK73H2BT38R3F
R434	0699-3974	1	RESISTOR 14.7K +-1% .063W TKF TC0+-200	00746	MCR03-F-1472
R435	0699-1358	1	RESISTOR 38.3 +-1% .125W TKF TC0+-100	09891	RK73H2BT38R3F
R436	0699-1358	1	RESISTOR 38.3 +-1% .125W TKF TC0+-100	09891	RK73H2BT38R3F
R437	0699-3964	1	RESISTOR 5.11K +-1% .063W TKF TC0+-200	09891	RK73H1J5111F
R438	0699-3964	1	RESISTOR 5.11K +-1% .063W TKF TC0+-200	09891	RK73H1J5111F
R439	0699-3924	1	RESISTOR 100 +-1% .063W TKF TC0+-200	00746	MCR03-F-1000
R440	0699-3935	1	RESISTOR 287 +-1% .063W TKF TC0+-200	00746	MCR03-F-2870
R441	0699-3913	1	RESISTOR 31.6 +-1% .063W TKF TC0+-200	09891	RK73H1J31R6F
R442	0699-3961	1	RESISTOR 3.83K +-1% .063W TKF TC0+-200	09891	RK73H1J3831F
R443	0699-3941	1	RESISTOR 511 +-1% .063W TKF TC0+-200	00746	MCR03-F-5110

Agilent Part Number E4401-60095
1.5 GHz Tracking Generator Control

Reference Designator	HP Part Number	Qty	Description	Mgr Code	Mfr Part Number
R444	0699-3947	1	RESISTOR 1K +-1% .063W TKF TC0+-200	00746	MCR03-F-1001
R445	0699-3929	1	RESISTOR 162 +-1% .063W TKF TC0+-200	09891	RK73H1J1620F
R446	0699-3964	1	RESISTOR 5.11K +-1% .063W TKF TC0+-200	09891	RK73H1J5111F
R447	0699-3903	1	RESISTOR 12.1 +-1% .063W TKF TC0+-200	09891	RK7H1J12R1F
R448	0699-3939	1	RESISTOR 422 +-1% .063W TKF TC0+-200	09891	RK73H1J4220F
R449	0699-3964	1	RESISTOR 5.11K +-1% .063W TKF TC0+-200	09891	RK73H1J5111F
R450	0699-3939	1	RESISTOR 422 +-1% .063W TKF TC0+-200	09891	RK73H1J4220F
R451	0699-3970	1	RESISTOR 10K +-1% .063W TKF TC0+-200	09891	RK73H1J1002F
R452	0699-3956	1	RESISTOR 2.37K +-1% .063W TKF TC0+-200	09891	RK73H1J2371F
R453	0699-3924	1	RESISTOR 100 +-1% .063W TKF TC0+-200	00746	MCR03-F-1000
R533	0699-3970	1	RESISTOR 10K +-1% .063W TKF TC0+-200	09891	RK73H1J1002F
R534	0699-3977	1	RESISTOR 19.6K +-1% .063W TKF TC0+-200	09891	RK73H1J1962F
R535	0699-3984	1	RESISTOR 38.3K +-1% .063W TKF TC0+-200	09891	RK73H1J3832F
R552	0699-3941	1	RESISTOR 511 +-1% .063W TKF TC0+-200	00746	MCR03-F-5110
R553	0699-3941	1	RESISTOR 511 +-1% .063W TKF TC0+-200	00746	MCR03-F-5110
R554	0699-3928	1	RESISTOR 147 +-1% .063W TKF TC0+-200	00746	MCR03-F-1470
R555	0699-3928	1	RESISTOR 147 +-1% .063W TKF TC0+-200	00746	MCR03-F-1470
R556	0699-3928	1	RESISTOR 147 +-1% .063W TKF TC0+-200	00746	MCR03-F-1470
R583	0699-3947	1	RESISTOR 1K +-1% .063W TKF TC0+-200	00746	MCR03-F-1001
R584	0699-3941	1	RESISTOR 511 +-1% .063W TKF TC0+-200	00746	MCR03-F-5110
R585	0699-3947	1	RESISTOR 1K +-1% .063W TKF TC0+-200	00746	MCR03-F-1001
R586	0699-3947	1	RESISTOR 1K +-1% .063W TKF TC0+-200	00746	MCR03-F-1001
R587	0699-3947	1	RESISTOR 1K +-1% .063W TKF TC0+-200	00746	MCR03-F-1001
R588	0699-3947	1	RESISTOR 1K +-1% .063W TKF TC0+-200	00746	MCR03-F-1001
R589	0699-3947	1	RESISTOR 1K +-1% .063W TKF TC0+-200	00746	MCR03-F-1001
R590	0699-3909	1	RESISTOR 21.5 +-1% .063W TKF TC0+-200	09891	RK73H1J21R5F
R592	0699-3955	1	RESISTOR 2.15K +-1% .063W TKF TC0+-200	09891	RK73H1J2151F
R593	0699-3953	1	RESISTOR 1.78K +-1% .063W TKF TC0+-200	00746	MCR03-F-1781
R594	0699-3964	1	RESISTOR 5.11K +-1% .063W TKF TC0+-200	09891	RK73H1J5111F
R596	0699-3918	1	RESISTOR 51.1 +-1% .063W TKF TC0+-200	00746	MCR03-F-51R1

 **Indicates factory-selected value*

Agilent Part Number E4401-60095
1.5 GHz Tracking Generator Control

Reference Designator	HP Part Number	Qty	Description	Mgr Code	Mfr Part Number
U1	E4401-80011	1	PAL	28480	E4401-80011
U2	1820-6277	1	IC SHF-RGTR CMOS/HC SYNC/ASYNC SERIAL-IN	02237	MM74HC595M
U3	1820-4215	1	IC DCDR-DEMUXR CMOS/HC BIN 3-TO-8-LINE	02910	74HC138D
U4	E4401-80083	1		28480	E4401-80083
U5	1820-6277	1	IC SHF-RGTR CMOS/HC SYNC/ASYNC SERIAL-IN	02237	MM74HC595M
U6	1820-8830	1	IC MUXR/DATA-SEL CMOS/ACT 8-TO-1-LINE	02237	74ACT251SCX
U7	1820-5804	1	IC SHF-RGTR CMOS/HC SYNC/ASYNC	01698	SN74HC165D
U8	1820-5940	1	IC GATE CMOS/ACT AND QUAD 2-INP	02237	74ACT08SCX.
U9	1820-5802	1	IC INV CMOS/HC HEX	01698	SN74HC05D
U10	1820-8728	1	IC GATE CMOS/ACT NOR QUAD 2-INP	02237	74ACT02SCX.
U11	1820-8728	1	IC GATE CMOS/ACT NOR QUAD 2-INP	02237	74ACT02SCX.
U12	1820-5940	1	IC GATE CMOS/ACT AND QUAD 2-INP	02237	74ACT08SCX.
U13	1826-1838	1	IC PWR MGT-V-REF-FXD 4.95/5.05V 8 PINS	10858	LT1021DCS8-5
U14	1826-1925	1	IC OP AMP LOW-NOISE SINGLE 8 PIN	03285	OP-27GS
U38	1826-3000	1	IC AUDIO AMPL LOW-NOISE DUAL 8 PIN	03285	OP275GS
U39	1820-5937	1	IC FF CMOS/AC D-TYPE POS-EDGE-TRIG	02237	74AC74SC.
U40	1820-5945	1	IC GATE CMOS/AC NAND QUAD 2-INP	36633	MC74AC00D
U42	1820-5937	1	IC FF CMOS/AC D-TYPE POS-EDGE-TRIG	02237	74AC74SC.
U43	1826-1925	1	IC OP AMP LOW-NOISE SINGLE 8 PIN	03285	OP-27GS
U44	1826-1528	1	IC COMPARATOR LP QUAD 14 PIN PLSTC-SOIC	03406	LM339M
U45	1826-1925	1	IC OP AMP LOW-NOISE SINGLE 8 PIN	03285	OP-27GS
U46	1826-1572	1	IC COMPARATOR PRCN DUAL 8 PIN PLSTC-SOIC	02910	LM393D
U47	1826-2888	1	IC TEMP XDCR PRCN SINGLE 8 PIN	03406	LM335AM
U48	1826-2349	1	IC RF/IF AMPL LOW-NOISE 4 PIN	01542	INA-10386
U49	1826-2175	1	IC RF/IF AMPL SINGLE 4 PIN U-WAVE-PILL	01542	MSA-0386-TR1

Agilent Part Number E4401-60095
1.5 GHz Tracking Generator Control

Reference Designator	HP Part Number	Qty	Description	Mgr Code	Mfr Part Number
U50	1826-2175	1	IC RF/IF AMPL SINGLE 4 PIN U-WAVE-PILL	01542	MSA-0386-TR1
U53	1821-4291	1	IC-ASIC CL-BSD CMOS 64046 PLCC	02037	SC64046FN
U54	1826-1402	1	IC PWR MGT-V-REG-FXD-POS 4.8/5.2V 8 PINS	03406	LM78L05ACM
U55	1821-1821	1	IC-ASIC GT-ARY 60K GATES CMOS 60081	08779	M60081L-0124FP
U56	1826-2149	1	ANALOG SWITCH 4 SPST 16 -P-SOIC	05524	DG444DY
U58	1826-2133	1	IC RF/IF AMPL WB 4 PIN U-WAVE-PILL	01542	MSA-1105
U59	1826-3357	1	IC RF/IF AMPL LOW-NOISE 6 PIN	01542	MGA-87563
U60	1826-2133	1	IC RF/IF AMPL WB 4 PIN U-WAVE-PILL	01542	MSA-1105
U61	1826-3358	1	IC RF/IF AMPL LOW-NOISE 6 PIN	01542	MGA-86563
U62	1826-2133	1	IC RF/IF AMPL WB 4 PIN U-WAVE-PILL	01542	MSA-1105
U63	1826-3358	1	IC RF/IF AMPL LOW-NOISE 6 PIN	01542	MGA-86563
U64	1826-3358	1	IC RF/IF AMPL LOW-NOISE 6 PIN	01542	MGA-86563
U78	1826-1985	1	ANALOG SWITCH 4 SPST 16 -P-SOIC	05524	DG411DY

 **Indicates factory-selected value*

S300

SYM	REVISIONS	APPROVED	DATE
A	AS ISSUED /RO	P BROWN	10-27-98

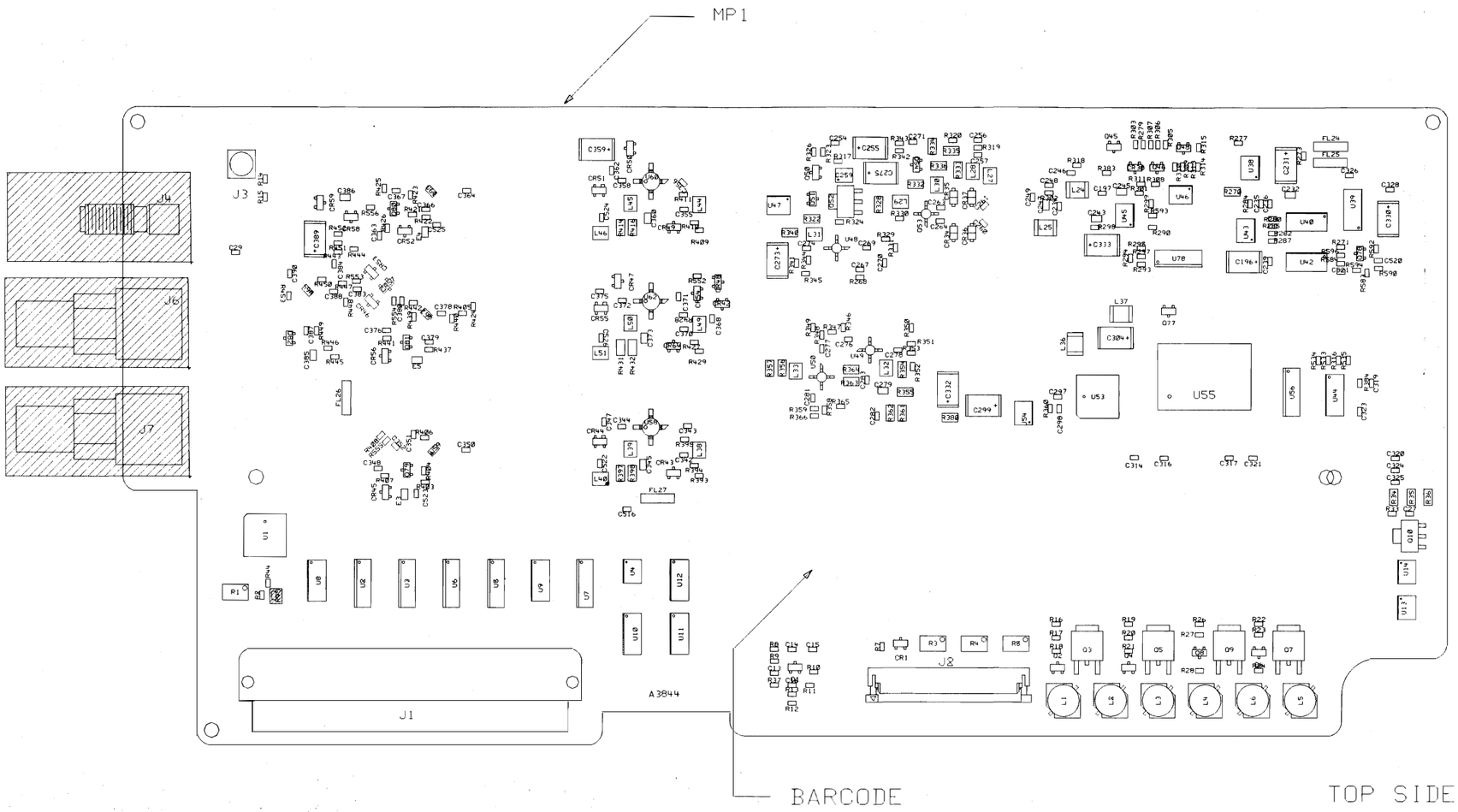

NOTE: (UNLESS OTHERWISE SPECIFIED)

1 USE RAW BOARD PART NUMBER E4401-20095.
2 PART NUMBERS 9135-0461 (FL1, FL23-27) MUST NOT BE EXPOSED TO HALIDE CONTAINING ACID FLUXES.
3 COMPONENTS THAT ARE HATCHED ////////// ARE NOT LOADED ON THIS ASSEMBLY (J4,6,7 AND R45)

SEE E4401-60095 MATERIAL LIST

HP RESTRICTED
THIS DOCUMENT CONTAINS CONFIDENTIAL, PROPRIETARY INFORMATION THAT IS HEWLETT-PACKARD (HP) PROPERTY. DO NOT DISCLOSE TO OR DUPLICATE FOR OTHERS EXCEPT AS AUTHORIZED BY HP.

UNLESS OTHERWISE SPECIFIED. DIMENSIONS ARE IN INCHES.	R ODAY DRAWN BY	DATE	ASSEMBLY, PWB
TOLERANCES: XX.XXX ±.010 XX.XX ±.02	P Brown ENGINEER/CHECKER	DATE	TRACKING GEN CONTROL
THIRD ANGLE PROJECTION	RELEASE TO PROD.	DATE	TITLE
DO NOT SCALE THIS DRAWING	SUPERSEDES DWG.		

FILENAME a1aea095	HEWLETT PACKARD
SCALE None	
SHEET 1 OF 2	PART NUMBER E4401-60095
D-E4401-60095-2	

5300 D-

SYM	REVISIONS	APPROVED	DATE
	SEE SHEET 1		

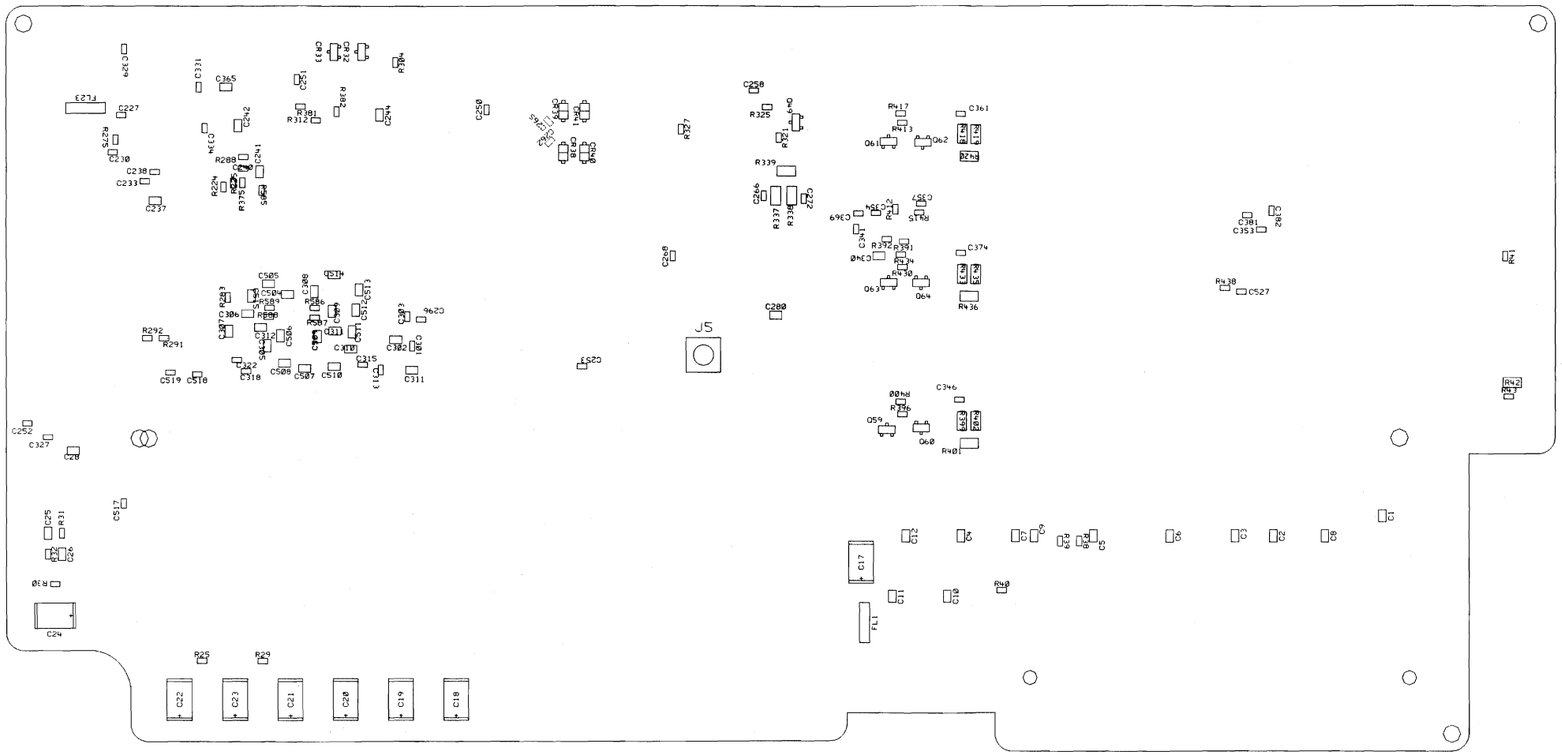

BOTTOM SIDE

HP RESTRICTED
THIS DOCUMENT CONTAINS CONFIDENTIAL, PROPRIETARY INFORMATION THAT IS HEWLETT-PACKARD (HP) PROPERTY. DO NOT DISCLOSE TO OR DUPLICATE FOR OTHERS EXCEPT AS AUTHORIZED BY HP.

UNLESS OTHERWISE SPECIFIED, DIMENSIONS ARE IN INCHES.
TOLERANCES: XX.XXX ±.010 XX.XX ±.02
THIRD ANGLE PROJECTION
DO NOT SCALE THIS DRAWING

R ODAY — DRAWN BY — DATE
PAT BROWN — ENGINEER/CHECKER — DATE
RELEASE TO PROD. — DATE
SUPERSEDES DWG.

ASSEMBLY, PWB
SOURCE LOL
TRACKING GEN
CONTROL
TITLE

a6aea095 FILENAME
SCALE NONE
SHEET 2 OF 2
HEWLETT PACKARD
E4401-60095 PART NUMBER
D-E4401-60095-2

D-E4401-60095-1

REV	INFORMATION	APPROVED	DATE
A	AS ISSUED		

TRACKING GENERATOR (ADR10)

J1-PM41 — PM41 — NC

J1-1	1 ACOM	J1-51	51 ACOM
J1-2	2 ACOM	J1-52	52 10MHZ_REF
J1-3	3 ACOM	J1-53	53 ACOM
J1-4	4 AUDIO	J1-54	54 ACOM
J1-5	5 ACOM	J1-55	55 ACOM
J1-6	6 ACOM	J1-56	56 ANA_TST
J1-7	7 ACOM	J1-57	57 ACOM
J1-8	8 ORD.ANLO7	J1-58	58 ACOM
J1-9	9 ACOM	J1-59	59 ACOM
J1-10	10 ACOM	J1-60	60 ORD.ANLO6
J1-11	11 ACOM	J1-61	61 ACOM
J1-12	12 ORD.ANLO5	J1-62	62 ACOM
J1-13	13 ACOM	J1-63	63 ACOM
J1-14	14 ACOM	J1-64	64 ORD.ANLO4
J1-15	15 ACOM	J1-65	65 ACOM
J1-16	16 ORD.ANLO3	J1-66	66 ACOM
J1-17	17 ACOM	J1-67	67 ACOM
J1-18	18 ACOM	J1-68	68 ORD.ANLO2
J1-19	19 ACOM	J1-69	69 ACOM
J1-20	20 ORD.ANLO1	J1-70	70 ACOM
J1-21	21 ACOM	J1-71	71 ACOM
J1-22	22 ACOM	J1-72	72 AUX.VIDEO
J1-23	23 ACOM	J1-73	73 ACOM
J1-24	24 IF.VIDEO	J1-74	74 ACOM
J1-25	25 ACOM	J1-75	75 ACOM
J1-26	26 ACOM	J1-76	76 AC.1F
J1-27	27 ACOM	J1-77	77 ACOM
J1-28	28 GATE_AC	J1-78	78 ACOM
J1-29	29 ACOM	J1-79	79 ACOM
J1-30	30 AC_TRIG	J1-80	80 HSWP_CNTRL
J1-31	31 ACOM	J1-81	81 HSWP_AC
J1-32	32 ADC.SYNC	J1-82	82 LAC_SRQ
J1-33	33 ACOM	J1-83	83 HPUP.SYNC
J1-34	34 HPUP_AC	J1-84	84 MISO
J1-35	35 AC.1D0	J1-85	85 LCNTRL
J1-36	36 AC.1D1	J1-86	86 MOS1
J1-37	37 AC.1D2	J1-87	87 LDATA
J1-38	38 AC.1D3	J1-88	88 SCK
J1-39	39 AC.1D4	J1-89	89 LADDR
J1-40	40 ACOM	J1-90	90 ACOM
J1-41	41 N15	J1-91	91 N15
J1-42	42 N5	J1-92	92 N5
J1-43	43 P5	J1-93	93 P5
J1-44	44 P5	J1-94	94 P5
J1-45	45 P15	J1-95	95 P15
J1-46	46 P15	J1-96	96 P15
J1-47	47 P28	J1-97	97 P28
J1-48	48	J1-98	98
J1-49	49 ACOM	J1-99	99 ACOM
J1-50	50 ACOM	J1-100	100 ACOM

J1-PM42 — PM42 — NC

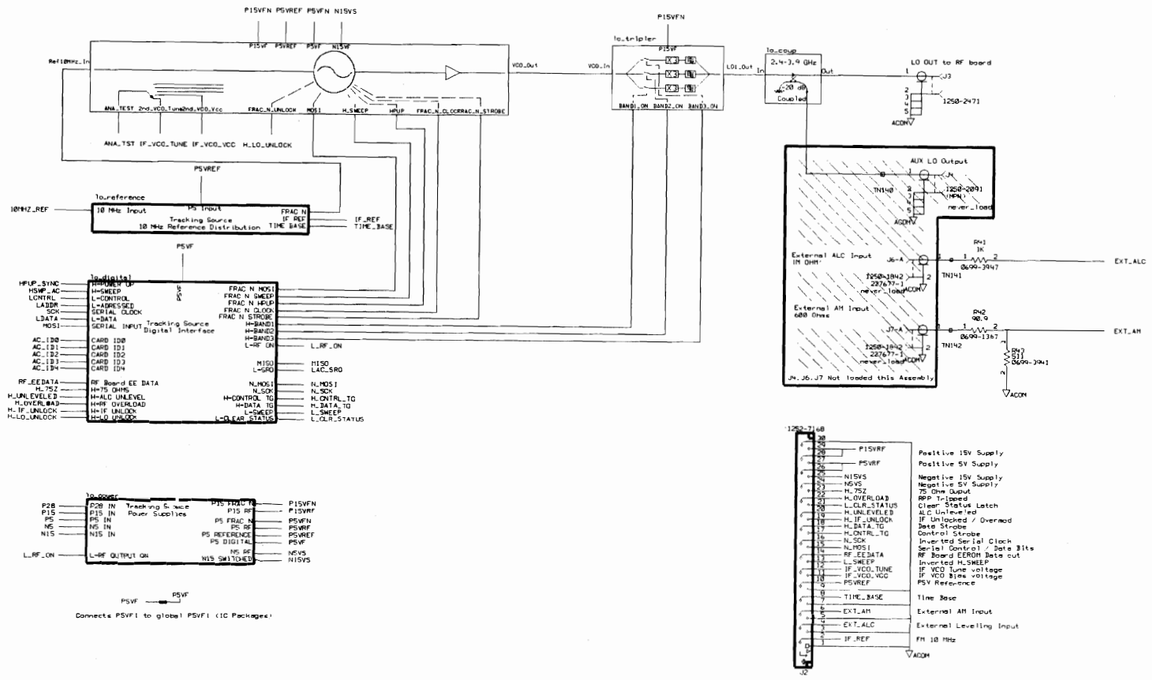

Measurement Conditions
Frequency: 10 MHz
Amplitude: -10 dBm
Output Atten: 0dB
Modulation: Off
Room Temp: 25 Deg C

Test Points
TP#
None

Interface Restrictions
H: None
OR: None
RS: None
FL: None
J: J1-J4,J6-J7
L: None
D: None
R: R41-RN1
U: None

HP RESTRICTED
THIS DOCUMENT CONTAINS CONFIDENTIAL, PROPRIETARY INFORMATION THAT IS HEWLETT-PACKARD (HP) PROPERTY. DO NOT DISCLOSE TO OR DUPLICATE FOR OTHERS EXCEPT AS AUTHORIZED BY HP.

LAST CHECKED	DATE	SCHEMATIC, PWA TRACKING GENERATOR LO CONTROL BOARD ASSY INTERCONNECT DIAGRAM	HEWLETT PACKARD 5100
ENGINEER	SHEET 1 OF 1		
DRAWN BY	SIZE D	TITLE SHP_E4401/60095/AA3844/LO_TOP sheet1 PATHNAME	PART NUMBER E4401-60095
	AA3844 ASSY REV	A3844 BOM REV / 1 PAGE OF 7	D-E4401-60095-1 DWG. NO.

(N) FRACTIONAL N FIRST LO SYNTHESIZER

REVISIONS
SEE PAGE 1 FOR REVISION HISTORY

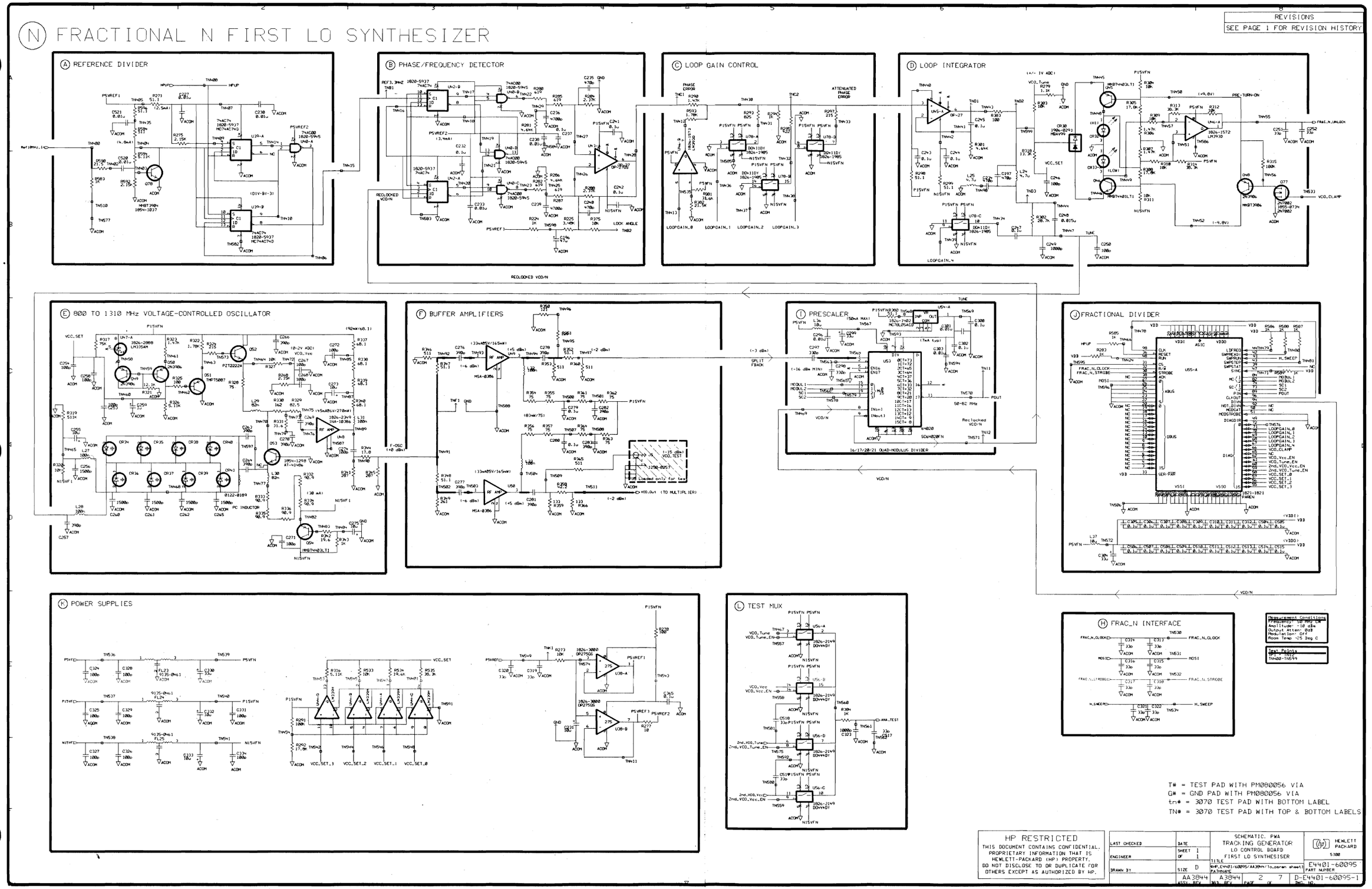

T# = TEST PAD WITH PM080056 VIA
G# = GND PAD WITH PM080056 VIA
tn# = 3070 TEST PAD WITH BOTTOM LABEL
TN# = 3070 TEST PAD WITH TOP & BOTTOM LABELS

HP RESTRICTED
THIS DOCUMENT CONTAINS CONFIDENTIAL, PROPRIETARY INFORMATION THAT IS HEWLETT-PACKARD (HP) PROPERTY. DO NOT DISCLOSE TO OR DUPLICATE FOR OTHERS EXCEPT AS AUTHORIZED BY HP.

LAST CHECKED	DATE	SCHEMATIC, PWA TRACKING GENERATOR LO CONTROL BOARD FIRST LO SYNTHESISER
ENGINEER	SHEET 1 OF 1	TITLE
DRAWN BY	SIZE D	HP_EN401/60095/AA3844/1(paren sheet)
	AA3844 ASSY. REV.	A3844 BOM REV. PAGE 2 OF 7

HEWLETT PACKARD
5308
E4401-60095 PART NUMBER
D-E4401-60095-1 DWG. NO.

REVISIONS
SEE PAGE 1 FOR REVISION HISTORY

⓪ FIRST LO MULTIPLIER

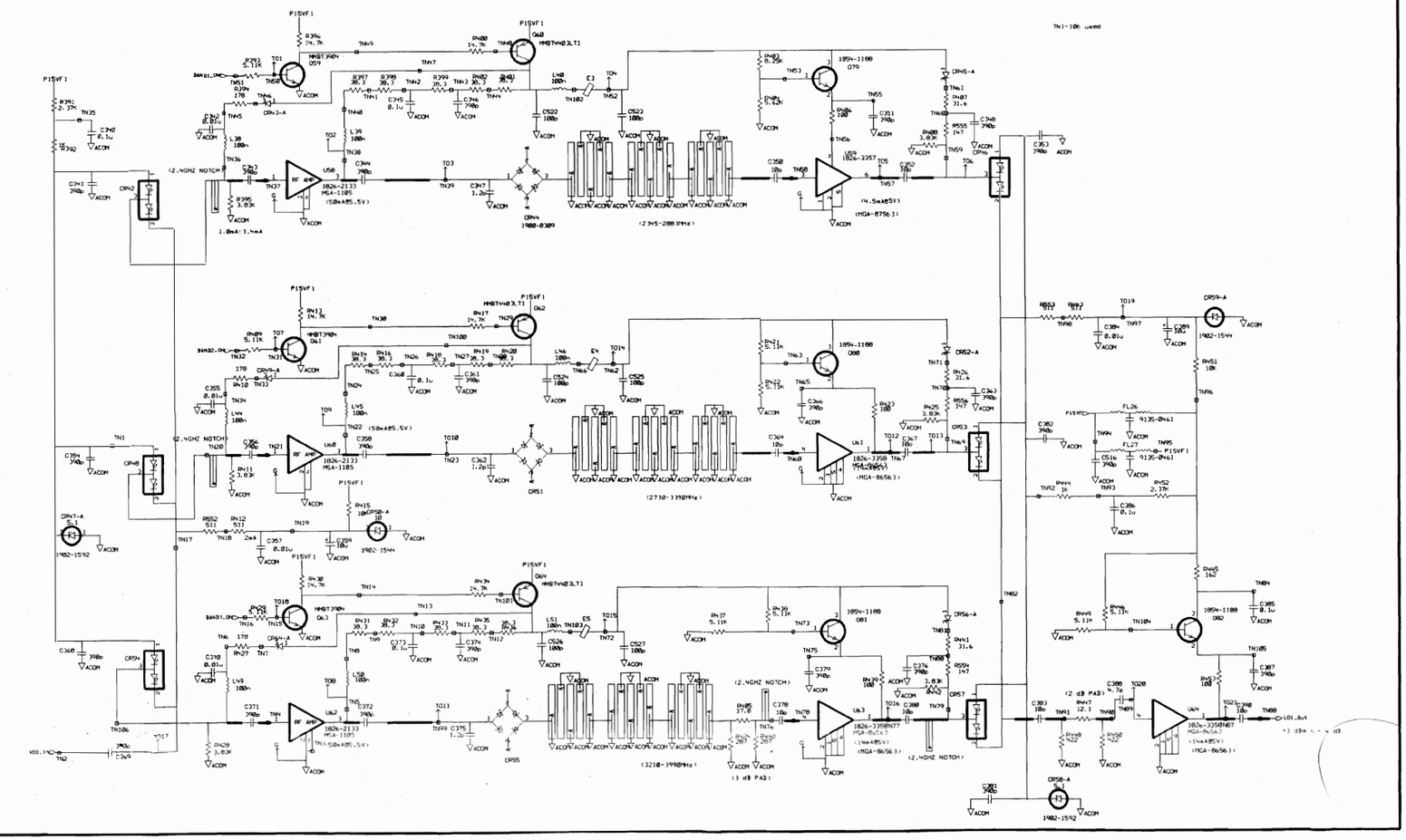
TN1-106 used
(2.4GHZ NOTCH)
(2745-2883MHz)
(2730-3390MHz)
(3210-3990MHz)
(3 dB PAD)
(2 dB PAD)
(MGA-8563)
(MGA-8656)
(MGA-8563)
(MGA-8656)
(MGA-8563)
(MGA-8656

REVISIONS
SEE PAGE 1 FOR REVISION HISTORY

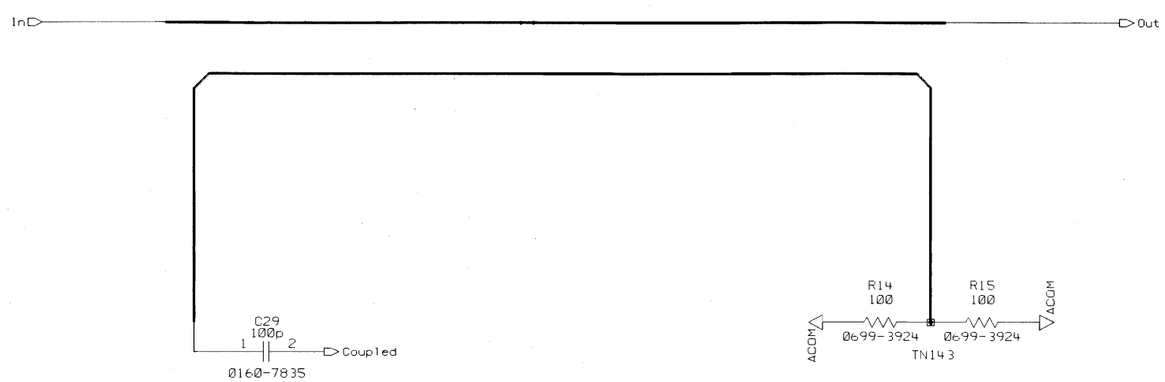

Measurement Conditions
Frequency: 50 MHz CW
Amplitude: -10 dBm
Output Atten: 0dB
Modulation: Off
Room Temp ~25 Deg C

Test Points
TP xxx-xxx
TN143

Reference Designators:
C29
CR: None
DS: None
FL: None
J: None
L: None
Q: None
R: R14-R15
U: None

HP RESTRICTED
THIS DOCUMENT CONTAINS CONFIDENTIAL. PROPRIETARY INFORMATION THAT IS HEWLETT-PACKARD (HP) PROPERTY. DO NOT DISCLOSE TO OR DUPLICATE FOR OTHERS EXCEPT AS AUTHORIZED BY HP.

LAST CHECKED	DATE	SCHEMATIC. PWA TRACKING GENERATOR LO CONTROL BOARD FIRST LO COUPLER	HEWLETT PACKARD 5300
ENGINEER	SHEET 1 OF 1	TITLE	
DRAWN BY	SIZE B	$HP_E4401/60095/AA3844/lo_coup sheet1 PATHNAME	E4401-60095 PART NUMBER
	AA3844 ASSY. REV	A3844 BRD. REV / PAGE 4 OF 7	B-E4401-60095-1 DWG. NO.

REVISIONS
SEE PAGE 1 FOR REVISION HISTORY

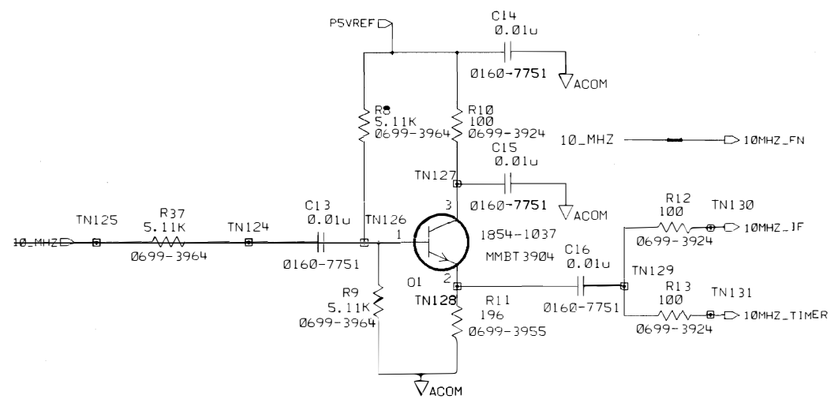

Measurement Conditions
Frequency: 50 MHz CW
Amplitude: -10 dBm
Output Atten: 0dB
Modulation: Off
Room Temp ~25 Deg C

Test Points
TP xxx-xxx
TN: TN124-TN131

Reference Designators:
C13-C16
CR: None
DS: None
FL: None
J: None
L: None
Q1
R8-R13,R37
U: None

HP RESTRICTED

THIS DOCUMENT CONTAINS CONFIDENTIAL. PROPRIETARY INFORMATION THAT IS HEWLETT-PACKARD (HP) PROPERTY. DO NOT DISCLOSE TO OR DUPLICATE FOR OTHERS EXCEPT AS AUTHORIZED BY HP.

LAST CHECKED	DATE	SCHEMATIC, PWA TRACKING GENERATOR LO CONTROL BOARD REFERENCE DISTRIBUTION	HEWLETT PACKARD 5300
ENGINEER	SHEET 1 OF 1	TITLE	
DRAWN BY	SIZE B	$HP_E4401/60095/AA3844/lo_reference sheet1 PATHNAME	E4401-60095 PART NUMBER
	AA3844 ASSY. REV	A3844 BRD. REV PAGE 5 OF 7	B-E4401-60095-1 DWG. NO.

REVISIONS
SEE PAGE 1 FOR REVISION HISTORY

A) SOURCE ADDRESS AND CONTROL

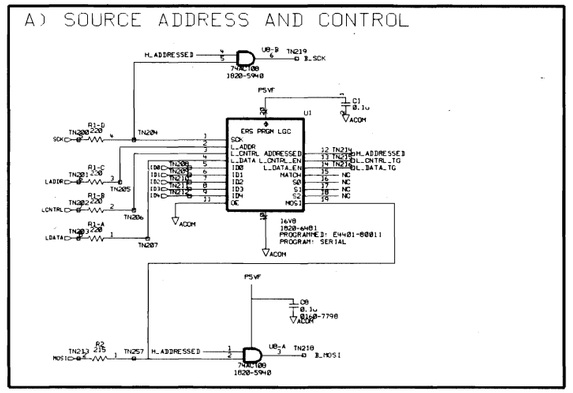

B) SUB ADDRESS AND CONTROL

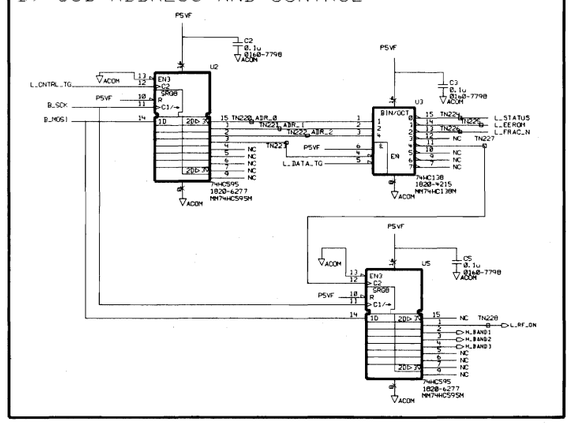

F) CAL ROM

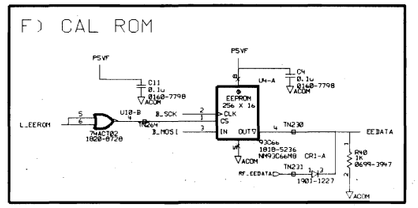

C) SOURCE STATUS

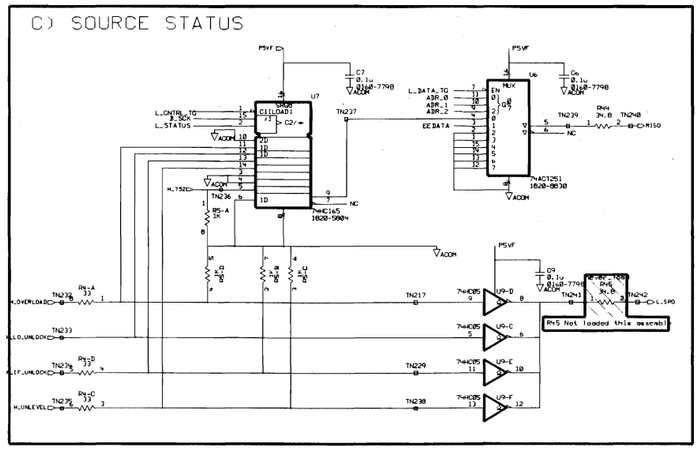

D) RF BOARD INTERFACE

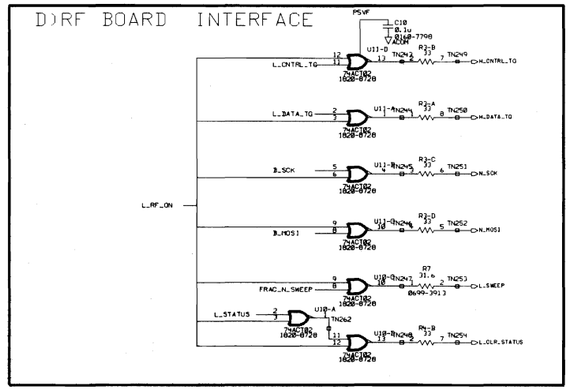

E) FRAC N INTERFACE

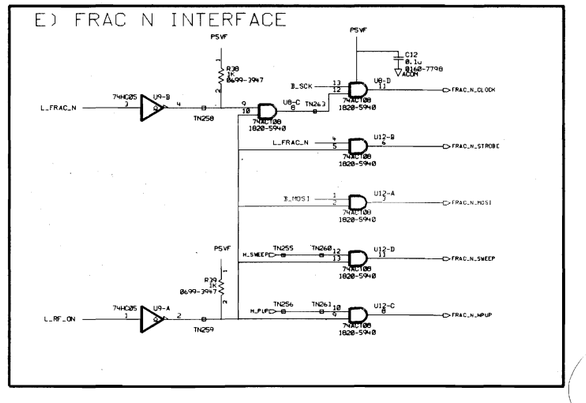

Measurement Conditions
Frequency: 30 MHz CW
Amplitude: -10 dBm
Output Atten: 0dB
Modulation: Off
Room Temp: 25 Deg C

Test Points
TP-xxxxxx
TN-xxx

Reference Designators
U: U1-12
CR1
JG: None
FL1: None
J: None
L: None
Q: None
R1-5,R7,R18-40,RN4,RN6
U: U1-12

HP RESTRICTED
THIS DOCUMENT CONTAINS CONFIDENTIAL, PROPRIETARY INFORMATION THAT IS HEWLETT-PACKARD (HP) PROPERTY. DO NOT DISCLOSE TO OR DUPLICATE FOR OTHERS EXCEPT AS AUTHORIZED BY HP.

LAST CHECKED	DATE	SCHEMATIC, PWA TRACKING GENERATOR LO CONTROL BOARD DIGITAL INTERFACE	HEWLETT PACKARD 5300
ENGINEER	SHEET 1 OF 1	TITLE	E4401-60095
DRAWN BY	SIZE D	PATHNAME	PART NUMBER
AA 3844	A 3844	6 7	D-E4401-60095-1
ASSY REV	MB REV	PAGE OF	DWG NO

POWER SUPPLY

REVISIONS
SEE PAGE 1 FOR REVISION HISTORY

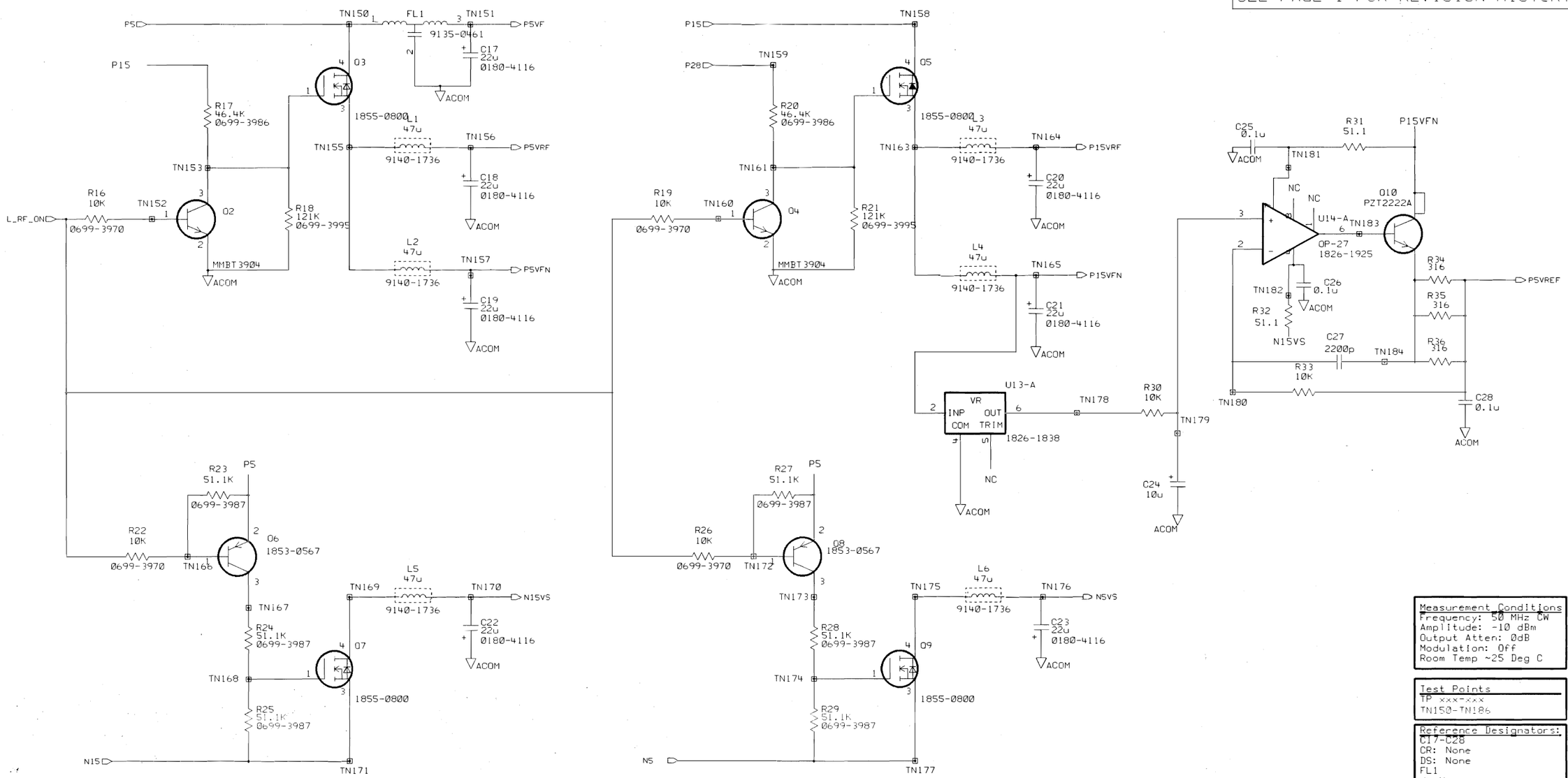

Measurement Conditions
Frequency: 50 MHz CW
Amplitude: -10 dBm
Output Atten: 0dB
Modulation: Off
Room Temp ~25 Deg C

Test Points
TP xxx-xxx
TN150-TN186

Reference Designators:
C17-C28
CR: None
DS: None
FL1
J: None
L1-L6
Q2-Q10
R16-R36
U13-U14

HP RESTRICTED
THIS DOCUMENT CONTAINS CONFIDENTIAL. PROPRIETARY INFORMATION THAT IS HEWLETT-PACKARD (HP) PROPERTY. DO NOT DISCLOSE TO OR DUPLICATE FOR OTHERS EXCEPT AS AUTHORIZED BY HP.

LAST CHECKED	DATE	SCHEMATIC, PWA TRACKING GENERATOR LO CONTROL BOARD POWER DISTRIBUTION	HEWLETT PACKARD 5300
ENGINEER	SHEET 1 OF 1	TITLE	
DRAWN BY	SIZE B	#HP_E4401/60095/AA3844/lo_power sheet1 PATHNAME	E4401-60095 PART NUMBER
	AA3844 ASSY. REV	A3844 BRD. REV	PAGE 7 OF 7	B-E4401-60095-1 DWG. NO.

Component-Level Information Packet for E4403-60004

3.0 GHz Tracking Generator Driver

Agilent Technologies

Agilent Part Number: E4403-90003

Printed in Malaysia April 2001

Notice

The information contained in this document is subject to change without notice. Agilent Technologies makes no warranty of any kind with regard to this material, including but not limited to, the implied warranties of merchantability and fitness for a particular purpose. Agilent Technologies shall not be liable for errors contained herein or for incidental or consequential damages in connection with the furnishing, performance, or use of this material.

© Copyright Agilent Technologies Inc. 2000, 2001
All Rights Reserved. Reproduction, adaptation, or translation without prior written permission is prohibited, except as allowed under the copyright laws.

Agilent Part Number E4403-60004
3.0 GHz Tracking Generator Driver

Reference Designator	Agilent Part Number	Qty	Description	Mgr Code	Mfr Part Number
C1	0180-4287	1	CAP-FXD 10uF +-20% 35 V TA	02010	TAJD106M035
C2	0160-7798	1	CAP-FXD 0.1uF +-10% 50 V CER X7R	06352	C2012X7R1H104K
C3	0180-3751	1	CAP-FXD 1uF +-20% 35 V TA	02010	TAJB105M035
C4	0180-3751	1	CAP-FXD 1uF +-20% 35 V TA	02010	TAJB105M035
C5	0180-3751	1	CAP-FXD 1uF +-20% 35 V TA	02010	TAJB105M035
C6	0180-4116	1	CAP-FXD 22uF +-20% 20 V TA	02010	TAJD226M020
C7	0180-4116	1	CAP-FXD 22uF +-20% 20 V TA	02010	TAJD226M020
C8	0180-4116	1	CAP-FXD 22uF +-20% 20 V TA	02010	TAJD226M020
C9	0180-4116	1	CAP-FXD 22uF +-20% 20 V TA	02010	TAJD226M020
C10	0180-4116	1	CAP-FXD 22uF +-20% 20 V TA	02010	TAJD226M020
C11	0180-3751	1	CAP-FXD 1uF +-20% 35 V TA	02010	TAJB105M035
C12	0180-4116	1	CAP-FXD 22uF +-20% 20 V TA	02010	TAJD226M020
C13	0180-3751	1	CAP-FXD 1uF +-20% 35 V TA	02010	TAJB105M035
C14	0180-3751	1	CAP-FXD 1uF +-20% 35 V TA	02010	TAJB105M035
C16	0160-7798	1	CAP-FXD 0.1uF +-10% 50 V CER X7R	06352	C2012X7R1H104K
C17	0160-7798	1	CAP-FXD 0.1uF +-10% 50 V CER X7R	06352	C2012X7R1H104K
C19	0160-7798	1	CAP-FXD 0.1uF +-10% 50 V CER X7R	06352	C2012X7R1H104K
C20	0160-7798	1	CAP-FXD 0.1uF +-10% 50 V CER X7R	06352	C2012X7R1H104K
C21	0160-7798	1	CAP-FXD 0.1uF +-10% 50 V CER X7R	06352	C2012X7R1H104K
C22	0160-7798	1	CAP-FXD 0.1uF +-10% 50 V CER X7R	06352	C2012X7R1H104K
C23	0160-7798	1	CAP-FXD 0.1uF +-10% 50 V CER X7R	06352	C2012X7R1H104K
C24	0160-7798	1	CAP-FXD 0.1uF +-10% 50 V CER X7R	06352	C2012X7R1H104K
C25	0160-7798	1	CAP-FXD 0.1uF +-10% 50 V CER X7R	06352	C2012X7R1H104K
C26	0160-7798	1	CAP-FXD 0.1uF +-10% 50 V CER X7R	06352	C2012X7R1H104K
C27	0160-7798	1	CAP-FXD 0.1uF +-10% 50 V CER X7R	06352	C2012X7R1H104K
C28	0160-7798	1	CAP-FXD 0.1uF +-10% 50 V CER X7R	06352	C2012X7R1H104K
C29	0160-7798	1	CAP-FXD 0.1uF +-10% 50 V CER X7R	06352	C2012X7R1H104K
C30	0160-7798	1	CAP-FXD 0.1uF +-10% 50 V CER X7R	06352	C2012X7R1H104K

Agilent Part Number E4403-60004
3.0 GHz Tracking Generator Driver

Reference Designator	Agilent Part Number	Qty	Description	Mgr Code	Mfr Part Number
C31	0160-7798	1	CAP-FXD 0.1uF +-10% 50 V CER X7R	06352	C2012X7R1H104K
C32	0160-7798	1	CAP-FXD 0.1uF +-10% 50 V CER X7R	06352	C2012X7R1H104K
C33	0160-7798	1	CAP-FXD 0.1uF +-10% 50 V CER X7R	06352	C2012X7R1H104K
C34	0160-7798	1	CAP-FXD 0.1uF +-10% 50 V CER X7R	06352	C2012X7R1H104K
C35	0160-7751	1	CAP-FXD 0.01uF +-10% 50 V CER X7R	02010	06035C103KAT
C36	0160-7798	1	CAP-FXD 0.1uF +-10% 50 V CER X7R	06352	C2012X7R1H104K
C37	0160-7798	1	CAP-FXD 0.1uF +-10% 50 V CER X7R	06352	C2012X7R1H104K
C38	0160-7798	1	CAP-FXD 0.1uF +-10% 50 V CER X7R	06352	C2012X7R1H104K
C39	0160-7798	1	CAP-FXD 0.1uF +-10% 50 V CER X7R	06352	C2012X7R1H104K
C40	0160-7798	1	CAP-FXD 0.1uF +-10% 50 V CER X7R	06352	C2012X7R1H104K
C41	0160-7798	1	CAP-FXD 0.1uF +-10% 50 V CER X7R	06352	C2012X7R1H104K
C42	0160-7798	1	CAP-FXD 0.1uF +-10% 50 V CER X7R	06352	C2012X7R1H104K
C43	0160-7798	1	CAP-FXD 0.1uF +-10% 50 V CER X7R	06352	C2012X7R1H104K
C44	0160-7798	1	CAP-FXD 0.1uF +-10% 50 V CER X7R	06352	C2012X7R1H104K
C45	0160-7798	1	CAP-FXD 0.1uF +-10% 50 V CER X7R	06352	C2012X7R1H104K
C46	0160-7798	1	CAP-FXD 0.1uF +-10% 50 V CER X7R	06352	C2012X7R1H104K
C47	0160-7798	1	CAP-FXD 0.1uF +-10% 50 V CER X7R	06352	C2012X7R1H104K
C48	0180-4287	1	CAP-FXD 10uF +-20% 35 V TA	02010	TAJD106M035
C49	0160-7798	1	CAP-FXD 0.1uF +-10% 50 V CER X7R	06352	C2012X7R1H104K
C50	0160-7798	1	CAP-FXD 0.1uF +-10% 50 V CER X7R	06352	C2012X7R1H104K
C51	0160-7798	1	CAP-FXD 0.1uF +-10% 50 V CER X7R	06352	C2012X7R1H104K
C52	0160-7798	1	CAP-FXD 0.1uF +-10% 50 V CER X7R	06352	C2012X7R1H104K
C53	0160-7798	1	CAP-FXD 0.1uF +-10% 50 V CER X7R	06352	C2012X7R1H104K
C54	0160-7798	1	CAP-FXD 0.1uF +-10% 50 V CER X7R	06352	C2012X7R1H104K
C55	0160-7798	1	CAP-FXD 0.1uF +-10% 50 V CER X7R	06352	C2012X7R1H104K
C56	0160-7798	1	CAP-FXD 0.1uF +-10% 50 V CER X7R	06352	C2012X7R1H104K
C58	0160-7798	1	CAP-FXD 0.1uF +-10% 50 V CER X7R	06352	C2012X7R1H104K
C59	0160-7798	1	CAP-FXD 0.1uF +-10% 50 V CER X7R	06352	C2012X7R1H104K
C60	0160-7798	1	CAP-FXD 0.1uF +-10% 50 V CER X7R	06352	C2012X7R1H104K
C62	0160-5944	1	CAP-FXD 0.047uF +-10% 50 V CER X7R	02010	08055C473KAT A

 **Indicates factory-selected value*

Agilent Part Number E4403-60004
3.0 GHz Tracking Generator Driver

Reference Designator	Agilent Part Number	Qty	Description	Mgr Code	Mfr Part Number
C63	0160-7748	1	CAP-FXD 1000pF +-10% 50 V CER X7R	02010	06035C102KAT
C64	0160-7748	1	CAP-FXD 1000pF +-10% 50 V CER X7R	02010	06035C102KAT
C65	0160-7751	1	CAP-FXD 0.01uF +-10% 50 V CER X7R	02010	06035C103KAT
C66	0160-7835	1	CAP-FXD 100pF +-5% 50 V CER C0G	02010	06035A101JAT
C67	0160-7835	1	CAP-FXD 100pF +-5% 50 V CER C0G	02010	06035A101JAT
C68	0160-7835	1	CAP-FXD 100pF +-5% 50 V CER C0G	02010	06035A101JAT
C69	0160-7835	1	CAP-FXD 100pF +-5% 50 V CER C0G	02010	06035A101JAT
C70	0160-7835	1	CAP-FXD 100pF +-5% 50 V CER C0G	02010	06035A101JAT
C71	0160-7835	1	CAP-FXD 100pF +-5% 50 V CER C0G	02010	06035A101JAT
C72	0160-7835	1	CAP-FXD 100pF +-5% 50 V CER C0G	02010	06035A101JAT
C73	0160-7835	1	CAP-FXD 100pF +-5% 50 V CER C0G	02010	06035A101JAT
C74	0160-7835	1	CAP-FXD 100pF +-5% 50 V CER C0G	02010	06035A101JAT
C75	0160-7835	1	CAP-FXD 100pF +-5% 50 V CER C0G	02010	06035A101JAT
C76	0160-7835	1	CAP-FXD 100pF +-5% 50 V CER C0G	02010	06035A101JAT
C77	0160-7835	1	CAP-FXD 100pF +-5% 50 V CER C0G	02010	06035A101JAT
C78	0160-7835	1	CAP-FXD 100pF +-5% 50 V CER C0G	02010	06035A101JAT
C79	0160-5944	1	CAP-FXD 0.047uF +-10% 50 V CER X7R	02010	08055C473KAT A
C80	0160-7835	1	CAP-FXD 100pF +-5% 50 V CER C0G	02010	06035A101JAT
C81	0160-7835	1	CAP-FXD 100pF +-5% 50 V CER C0G	02010	06035A101JAT
C82	0160-7835	1	CAP-FXD 100pF +-5% 50 V CER C0G	02010	06035A101JAT
C83	0160-7835	1	CAP-FXD 100pF +-5% 50 V CER C0G	02010	06035A101JAT
C84	0160-7835	1	CAP-FXD 100pF +-5% 50 V CER C0G	02010	06035A101JAT
C85	0160-7835	1	CAP-FXD 100pF +-5% 50 V CER C0G	02010	06035A101JAT
C86	0160-7835	1	CAP-FXD 100pF +-5% 50 V CER C0G	02010	06035A101JAT
C87	0160-7835	1	CAP-FXD 100pF +-5% 50 V CER C0G	02010	06035A101JAT
C88	0160-7748	1	CAP-FXD 1000pF +-10% 50 V CER X7R	02010	06035C102KAT
C89	0160-7748	1	CAP-FXD 1000pF +-10% 50 V CER X7R	02010	06035C102KAT
C90	0160-7748	1	CAP-FXD 1000pF +-10% 50 V CER X7R	02010	06035C102KAT
C91	0160-7748	1	CAP-FXD 1000pF +-10% 50 V CER X7R	02010	06035C102KAT
C92	0160-7835	1	CAP-FXD 100pF +-5% 50 V CER C0G	02010	06035A101JAT

Agilent Part Number E4403-60004
3.0 GHz Tracking Generator Driver

Reference Designator	Agilent Part Number	Qty	Description	Mgr Code	Mfr Part Number
C93	0160-7835	1	CAP-FXD 100pF +-5% 50 V CER C0G	02010	06035A101JAT
C94	0160-7835	1	CAP-FXD 100pF +-5% 50 V CER C0G	02010	06035A101JAT
C95	0160-7835	1	CAP-FXD 100pF +-5% 50 V CER C0G	02010	06035A101JAT
C96	0160-7748	1	CAP-FXD 1000pF +-10% 50 V CER X7R	02010	06035C102KAT
C97	0160-7748	1	CAP-FXD 1000pF +-10% 50 V CER X7R	02010	06035C102KAT
C98	0160-7835	1	CAP-FXD 100pF +-5% 50 V CER C0G	02010	06035A101JAT
C99	0160-7835	1	CAP-FXD 100pF +-5% 50 V CER C0G	02010	06035A101JAT
C100	0160-7835	1	CAP-FXD 100pF +-5% 50 V CER C0G	02010	06035A101JAT
C101	0160-7751	1	CAP-FXD 0.01uF +-10% 50 V CER X7R	02010	06035C103KAT
C102	0160-7751	1	CAP-FXD 0.01uF +-10% 50 V CER X7R	02010	06035C103KAT
C103	0160-5944	1	CAP-FXD 0.047uF +-10% 50 V CER X7R	02010	08055C473KAT A
C104	0160-7988	1	CAP-FXD 470pF +-5% 50 V CER C0G	06352	C1608COG1H471J
C105	0160-7988	1	CAP-FXD 470pF +-5% 50 V CER C0G	06352	C1608COG1H471J
C106	0160-7835	1	CAP-FXD 100pF +-5% 50 V CER C0G	02010	06035A101JAT
C107	0160-7835	1	CAP-FXD 100pF +-5% 50 V CER C0G	02010	06035A101JAT
C108	0160-7835	1	CAP-FXD 100pF +-5% 50 V CER C0G	02010	06035A101JAT
C109	0160-7835	1	CAP-FXD 100pF +-5% 50 V CER C0G	02010	06035A101JAT
C110	0160-7835	1	CAP-FXD 100pF +-5% 50 V CER C0G	02010	06035A101JAT
C111	0160-7835	1	CAP-FXD 100pF +-5% 50 V CER C0G	02010	06035A101JAT
C112	0160-7835	1	CAP-FXD 100pF +-5% 50 V CER C0G	02010	06035A101JAT
C113	0160-7835	1	CAP-FXD 100pF +-5% 50 V CER C0G	02010	06035A101JAT
C114	0160-7835	1	CAP-FXD 100pF +-5% 50 V CER C0G	02010	06035A101JAT
C115	0160-7835	1	CAP-FXD 100pF +-5% 50 V CER C0G	02010	06035A101JAT
C116	0160-7835	1	CAP-FXD 100pF +-5% 50 V CER C0G	02010	06035A101JAT
C117	0160-7835	1	CAP-FXD 100pF +-5% 50 V CER C0G	02010	06035A101JAT
C118	0160-7835	1	CAP-FXD 100pF +-5% 50 V CER C0G	02010	06035A101JAT
C120	0160-7835	1	CAP-FXD 100pF +-5% 50 V CER C0G	02010	06035A101JAT
C121	0160-7988	1	CAP-FXD 470pF +-5% 50 V CER C0G	06352	C1608COG1H471J
C122	0160-7988	1	CAP-FXD 470pF +-5% 50 V CER C0G	06352	C1608COG1H471J
C124	0160-7859	1	CAP-FXD 3900pF +-10% 50 V CER X7R	02010	06035C392KAT

 **Indicates factory-selected value*

Agilent Part Number E4403-60004
3.0 GHz Tracking Generator Driver

Reference Designator	Agilent Part Number	Qty	Description	Mgr Code	Mfr Part Number
C125	0160-7751	1	CAP-FXD 0.01uF +-10% 50 V CER X7R	02010	06035C103KAT
C126	0160-7751	1	CAP-FXD 0.01uF +-10% 50 V CER X7R	02010	06035C103KAT
C127	0160-7751	1	CAP-FXD 0.01uF +-10% 50 V CER X7R	02010	06035C103KAT
C128	0160-7751	1	CAP-FXD 0.01uF +-10% 50 V CER X7R	02010	06035C103KAT
C129	0160-7751	1	CAP-FXD 0.01uF +-10% 50 V CER X7R	02010	06035C103KAT
C130	0160-7751	1	CAP-FXD 0.01uF +-10% 50 V CER X7R	02010	06035C103KAT
C131	0160-7751	1	CAP-FXD 0.01uF +-10% 50 V CER X7R	02010	06035C103KAT
C132	0160-7751	1	CAP-FXD 0.01uF +-10% 50 V CER X7R	02010	06035C103KAT
C133	0160-8361	1	CAP-FXD 0.22uF +-10% 25 V CER X7R	02010	08053C224KATA
C134	0160-7751	1	CAP-FXD 0.01uF +-10% 50 V CER X7R	02010	06035C103KAT
C135	0160-7751	1	CAP-FXD 0.01uF +-10% 50 V CER X7R	02010	06035C103KAT
C136	0160-7751	1	CAP-FXD 0.01uF +-10% 50 V CER X7R	02010	06035C103KAT
C137	0160-7751	1	CAP-FXD 0.01uF +-10% 50 V CER X7R	02010	06035C103KAT
C138	0160-8361	1	CAP-FXD 0.22uF +-10% 25 V CER X7R	02010	08053C224KATA
C139	0160-7798	1	CAP-FXD 0.1uF +-10% 50 V CER X7R	06352	C2012X7R1H104K
C140	0160-7798	1	CAP-FXD 0.1uF +-10% 50 V CER X7R	06352	C2012X7R1H104K
C141	0160-7798	1	CAP-FXD 0.1uF +-10% 50 V CER X7R	06352	C2012X7R1H104K
C142	0160-7798	1	CAP-FXD 0.1uF +-10% 50 V CER X7R	06352	C2012X7R1H104K
C143	0160-7835	1	CAP-FXD 100pF +-5% 50 V CER C0G	02010	06035A101JAT
C144	0160-7835	1	CAP-FXD 100pF +-5% 50 V CER C0G	02010	06035A101JAT
C145	0160-7751	1	CAP-FXD 0.01uF +-10% 50 V CER X7R	02010	06035C103KAT
C146	0160-7751	1	CAP-FXD 0.01uF +-10% 50 V CER X7R	02010	06035C103KAT
C147	0160-7751	1	CAP-FXD 0.01uF +-10% 50 V CER X7R	02010	06035C103KAT
C148	0160-7873	1	CAP-FXD 820pF +-10% 50 V CER X7R	02010	06035C821KAT
C149	0160-5944	1	CAP-FXD 0.047uF +-10% 50 V CER X7R	02010	08055C473KAT A
C150	0160-7798	1	CAP-FXD 0.1uF +-10% 50 V CER X7R	06352	C2012X7R1H104K
C151	0160-7798	1	CAP-FXD 0.1uF +-10% 50 V CER X7R	06352	C2012X7R1H104K
C152	0160-7798	1	CAP-FXD 0.1uF +-10% 50 V CER X7R	06352	C2012X7R1H104K
C153	0160-7798	1	CAP-FXD 0.1uF +-10% 50 V CER X7R	06352	C2012X7R1H104K
C154	0180-3751	1	CAP-FXD 1uF +-20% 35 V TA	02010	TAJB105M035

Agilent Part Number E4403-60004
3.0 GHz Tracking Generator Driver

Reference Designator	Agilent Part Number	Qty	Description	Mgr Code	Mfr Part Number
C155	0180-3751	1	CAP-FXD 1uF +-20% 35 V TA	02010	TAJB105M035
C156	0160-7798	1	CAP-FXD 0.1uF +-10% 50 V CER X7R	06352	C2012X7R1H104K
C200	0160-7798	1	CAP-FXD 0.1uF +-10% 50 V CER X7R	06352	C2012X7R1H104K
C300	0160-7751	1	CAP-FXD 0.01uF +-10% 50 V CER X7R	02010	06035C103KAT
C302	0160-7869	1	CAP-FXD 680pF +-10% 50 V CER X7R	02010	06035C681KAT
C303	0160-7798	1	CAP-FXD 0.1uF +-10% 50 V CER X7R	06352	C2012X7R1H104K
C304	0160-7798	1	CAP-FXD 0.1uF +-10% 50 V CER X7R	06352	C2012X7R1H104K
C305	0160-7712	1	CAP-FXD 1500pF +-10% 50 V CER X7R	02010	06035C152KATRA
CR1	1901-1227	1	DIODE-SWITCHING 75V 200MA 6NS TO-236	02910	BAS16
CR2	1900-0310	1	DIODE-PIN	08852	M5X3183
CR3	1900-0310	1	DIODE-PIN	08852	M5X3183
CR4	1900-0310	1	DIODE-PIN	08852	M5X3183
CR5	1900-0310	1	DIODE-PIN	08852	M5X3183
CR7	1900-0293	1	DIODE-SCHOTTKY SM SIG	08852	M2X3340
CR8	1906-0291	1	DIODE-DUAL 70V 100MA T0-236AA	02910	BAV99
CR9	1906-0291	1	DIODE-DUAL 70V 100MA T0-236AA	02910	BAV99
CR10	1900-0078	1	DIODE-SCHOTTKY SM SIG	01542	HSMS-2800
CR11	1900-0078	1	DIODE-SCHOTTKY SM SIG	01542	HSMS-2800
CR12	1900-0078	1	DIODE-SCHOTTKY SM SIG	01542	HSMS-2800
CR14	1900-0078	1	DIODE-SCHOTTKY SM SIG	01542	HSMS-2800
CR15	1900-0078	1	DIODE-SCHOTTKY SM SIG	01542	HSMS-2800
CR16	1900-0078	1	DIODE-SCHOTTKY SM SIG	01542	HSMS-2800
CR17	1900-0078	1	DIODE-SCHOTTKY SM SIG	01542	HSMS-2800
CR18	1900-0078	1	DIODE-SCHOTTKY SM SIG	01542	HSMS-2800
CR19	1901-1227	1	DIODE-SWITCHING 75V 200MA 6NS TO-236	02910	BAS16
CR20	1900-0078	1	DIODE-SCHOTTKY SM SIG	01542	HSMS-2800
CR21	1901-1227	1	DIODE-SWITCHING 75V 200MA 6NS TO-236	02910	BAS16
CR25	1902-1424	1	DIODE-ZNR 5.6V 5% TO-236 (SOT-23)	06394	BZX84C5V6
E1	9170-1421	1	CORE-SHIELDING BEAD	06352	HF50ACB-322513
E2	9170-1421	1	CORE-SHIELDING BEAD	06352	HF50ACB-322513

 **Indicates factory-selected value*

Agilent Part Number E4403-60004
3.0 GHz Tracking Generator Driver

Reference Designator	Agilent Part Number	Qty	Description	Mgr Code	Mfr Part Number
E3	9170-1421	1	CORE-SHIELDING BEAD	06352	HF50ACB-322513
E4	9170-1421	1	CORE-SHIELDING BEAD	06352	HF50ACB-322513
E5	9170-1421	1	CORE-SHIELDING BEAD	06352	HF50ACB-322513
E6	9170-1421	1	CORE-SHIELDING BEAD	06352	HF50ACB-322513
E7	9170-1421	1	CORE-SHIELDING BEAD	06352	HF50ACB-322513
E8	9170-1421	1	CORE-SHIELDING BEAD	06352	HF50ACB-322513
E9	9170-1421	1	CORE-SHIELDING BEAD	06352	HF50ACB-322513
E10	9170-1421	1	CORE-SHIELDING BEAD	06352	HF50ACB-322513
E11	9170-1421	1	CORE-SHIELDING BEAD	06352	HF50ACB-322513
E12	9170-1421	1	CORE-SHIELDING BEAD	06352	HF50ACB-322513
E13	9170-1421	1	CORE-SHIELDING BEAD	06352	HF50ACB-322513
E14	9170-1421	1	CORE-SHIELDING BEAD	06352	HF50ACB-322513
E15	9170-1421	1	CORE-SHIELDING BEAD	06352	HF50ACB-322513
E16	9170-1421	1	CORE-SHIELDING BEAD	06352	HF50ACB-322513
E17	9170-1421	1	CORE-SHIELDING BEAD	06352	HF50ACB-322513
E18	9170-1421	1	CORE-SHIELDING BEAD	06352	HF50ACB-322513
FL1	9135-0461	1	FILTER-SUPPRESSION EMI; SMT; WORK-ING	09939	NFM61R10T102M00-621
FL2	9135-0461	1	FILTER-SUPPRESSION EMI; SMT; WORK-ING	09939	NFM61R10T102M00-621
FL3	9135-0461	1	FILTER-SUPPRESSION EMI; SMT; WORK-ING	09939	NFM61R10T102M00-621
FL4	9135-0461	1	FILTER-SUPPRESSION EMI; SMT; WORK-ING	09939	NFM61R10T102M00-621
J1	1252-5906	1	CONN-RECT MICRORBN 100-CKT 100-CONT	01380	2-557101-5
J2	1250-2596	1	CONNECTOR-RF SMA FEMALE 50-OHM	04670	142-0711-851
J3	1250-2596	1	CONNECTOR-RF SMA FEMALE 50-OHM	04670	142-0711-851
L1	9140-1109	1	INDUCTOR 4.7uH+-5% 3.4W-mmX4.8LG-mm	06352	NL453232-4R7J
L2	9140-1107	1	INDUCTOR 2.2uH+-5% 3.4W-mmX4.8LG-mm	28480	9140-1107
L3	9140-1736	1	INDUCTOR 47uH +20% -20% 7.3W-mmX7.3LG-mm	06353	E636CY-470M-P3

**Indicates factory-selected value*

Agilent Part Number E4403-60004
3.0 GHz Tracking Generator Driver

Reference Designator	Agilent Part Number	Qty	Description	Mgr Code	Mfr Part Number
L4	9140-1736	1	INDUCTOR 47uH +20% -20% 7.3W-mmX7.3LG-mm	06353	E636CY-470M-P3
L5	9140-1110	1	INDUCTOR 5.6uH+-5%3.4W-mmX4.8LG-mm	28480	9140-1110
L6	9140-1110	1	INDUCTOR 5.6uH+-5%3.4W-mmX4.8LG-mm	28480	9140-1110
L7	9140-1736	1	INDUCTOR 47uH +20% -20% 7.3W-mmX7.3LG-mm	06353	E636CY-470M-P3
L8	9140-1736	1	INDUCTOR 47uH +20% -20% 7.3W-mmX7.3LG-mm	06353	E636CY-470M-P3
L9	9140-1110	1	INDUCTOR 5.6uH+-5%3.4W-mmX4.8LG-mm	28480	9140-1110
L10	9140-1736	1	INDUCTOR 47uH +20% -20% 7.3W-mmX7.3LG-mm	06353	E636CY-470M-P3
L11	9140-1110	1	INDUCTOR 5.6uH+-5%3.4W-mmX4.8LG-mm	28480	9140-1110
L12	9140-1110	1	INDUCTOR 5.6uH+-5%3.4W-mmX4.8LG-mm	28480	9140-1110
L13	9140-1110	1	INDUCTOR 5.6uH+-5%3.4W-mmX4.8LG-mm	28480	9140-1110
L14	9140-1736	1	INDUCTOR 47uH +20% -20% 7.3W-mmX7.3LG-mm	06353	E636CY-470M-P3
MP2	E4403-20052	1	WASHER-TG	28480	E4403-20052
MP3	E4403-20052	1	WASHER-TG	28480	E4403-20052
P1	1252-0586	1	CONN-POSTTYPE.100-PIN-SPCG-MTG-END	01380	103168-5
Q1	1854-1037	1	TRANSISTOR NPN SI TO-236AA PD350MW	00746	SST3904T116
Q2	1853-0567	1	TRANSISTOR PNP SI SOT-23 (TO-236AB)	00746	SST3906T116
Q3	1854-1037	1	TRANSISTOR NPN SI TO-236AA PD350MW	00746	SST3904T116
Q4	1853-0567	1	TRANSISTOR PNP SI SOT-23 (TO-236AB)	00746	SST3906T116
Q5	1854-1037	1	TRANSISTOR NPN SI TO-236AA PD350MW	00746	SST3904T116
Q6	1855-0800	1	TRANSISTOR MOSFET N-CHAN E-MODE TO-252AA	36633	MTD3055VL
Q7	1855-0800	1	TRANSISTOR MOSFET N-CHAN E-MODE TO-252AA	36633	MTD3055VL
Q8	1855-0800	1	TRANSISTOR MOSFET N-CHAN E-MODE TO-252AA	36633	MTD3055VL
Q9	1855-1096	1	TRANSISTOR GAAS FET N-CHAN D-MODE	28480	1855-1096
Q10	1855-1096	1	TRANSISTOR GAAS FET N-CHAN D-MODE	28480	1855-1096

 **Indicates factory-selected value*

Agilent Part Number E4403-60004
3.0 GHz Tracking Generator Driver

Reference Designator	Agilent Part Number	Qty	Description	Mgr Code	Mfr Part Number
Q11	1855-1096	1	TRANSISTOR GAAS FET N-CHAN D-MODE	28480	1855-1096
Q12	1855-1096	1	TRANSISTOR GAAS FET N-CHAN D-MODE	28480	1855-1096
Q13	1855-1096	1	TRANSISTOR GAAS FET N-CHAN D-MODE	28480	1855-1096
Q14	1855-1096	1	TRANSISTOR GAAS FET N-CHAN D-MODE	28480	1855-1096
Q15	1855-1096	1	TRANSISTOR GAAS FET N-CHAN D-MODE	28480	1855-1096
Q16	1855-1096	1	TRANSISTOR GAAS FET N-CHAN D-MODE	28480	1855-1096
Q17	1853-0567	1	TRANSISTOR PNP SI SOT-23 (TO-236AB)	00746	SST3906T116
Q18	1854-1037	1	TRANSISTOR NPN SI TO-236AA PD350MW	00746	SST3904T116
R1	1810-1581	1	NET-RES 4 33.0 OHM 8-PIN	00746	MNR34K5AWJ330
R2	1810-1940	1	NET-RES 4 220.0 OHM 8-PIN	00746	MNR34J221
R3	0699-3970	1	RESISTOR 10K +-1% .063W TKF TC0+-200	09891	RK73H1J1002F
R4	0699-3970	1	RESISTOR 10K +-1% .063W TKF TC0+-200	09891	RK73H1J1002F
R5	0699-3947	1	RESISTOR 1K +-1% .063W TKF TC0+-200	00746	MCR03-F-1001
R6	0699-3933	1	RESISTOR 237 +-1% .063W TKF TC0+-200	00746	MCR03-F-2370
R7	0699-3987	1	RESISTOR 51.1K +-1% .063W TKF TC0+-200	09891	RK73H1J5112F
R8	0699-3970	1	RESISTOR 10K +-1% .063W TKF TC0+-200	09891	RK73H1J1002F
R9	0699-3987	1	RESISTOR 51.1K +-1% .063W TKF TC0+-200	09891	RK73H1J5112F
R10	0699-3970	1	RESISTOR 10K +-1% .063W TKF TC0+-200	09891	RK73H1J1002F
R11	0699-3986	1	RESISTOR 46.4K +-1% .063W TKF TC0+-200	09891	RK73H1J4642F
R12	0699-3970	1	RESISTOR 10K +-1% .063W TKF TC0+-200	09891	RK73H1J1002F
R13	0699-3970	1	RESISTOR 10K +-1% .063W TKF TC0+-200	09891	RK73H1J1002F
R14	0699-3947	1	RESISTOR 1K +-1% .063W TKF TC0+-200	00746	MCR03-F-1001
R15	0699-3995	1	RESISTOR 121K +-1% .063W TKF TC0+-200	09891	RK73H1J1213F
R17	0699-3947	1	RESISTOR 1K +-1% .063W TKF TC0+-200	00746	MCR03-F-1001
R18	0699-3947	1	RESISTOR 1K +-1% .063W TKF TC0+-200	00746	MCR03-F-1001
R19	0699-3947	1	RESISTOR 1K +-1% .063W TKF TC0+-200	00746	MCR03-F-1001
R20	0699-3970	1	RESISTOR 10K +-1% .063W TKF TC0+-200	09891	RK73H1J1002F
R21	0699-2841	1	RESISTOR 9K +-0.1% .125W TF TC0+-25	02499	W1206R039001BT
R22	0699-2841	1	RESISTOR 9K +-0.1% .125W TF TC0+-25	02499	W1206R039001BT

Agilent Part Number E4403-60004
3.0 GHz Tracking Generator Driver

Reference Designator	Agilent Part Number	Qty	Description	Mgr Code	Mfr Part Number
R23	0699-2847	1	RESISTOR 2K +-0.1% .125W TF TC0+-25	01172	BLU-1206 2K .1% 25PPM
R24	0699-3947	1	RESISTOR 1K +-1% .063W TKF TC0+-200	00746	MCR03-F-1001
R25	0699-3947	1	RESISTOR 1K +-1% .063W TKF TC0+-200	00746	MCR03-F-1001
R26	0699-3918	1	RESISTOR 51.1 +-1% .063W TKF TC0+-200	00746	MCR03-F-51R1
R27	0699-3967	1	RESISTOR 7.5K +-1% .063W TKF TC0+-200	09891	RK73H1J7501F
R28	0699-3970	1	RESISTOR 10K +-1% .063W TKF TC0+-200	09891	RK73H1J1002F
R29	0699-3918	1	RESISTOR 51.1 +-1% .063W TKF TC0+-200	00746	MCR03-F-51R1
R30	0699-3947	1	RESISTOR 1K +-1% .063W TKF TC0+-200	00746	MCR03-F-1001
R32	0699-3947	1	RESISTOR 1K +-1% .063W TKF TC0+-200	00746	MCR03-F-1001
R33	0699-3947	1	RESISTOR 1K +-1% .063W TKF TC0+-200	00746	MCR03-F-1001
R34	0699-3947	1	RESISTOR 1K +-1% .063W TKF TC0+-200	00746	MCR03-F-1001
R35	0699-3973	1	RESISTOR 13.3K +-1% .063W TKF TC0+-200	09891	RK73H1J1332F
R36	0699-3966	1	RESISTOR 6.81K +-1% .063W TKF TC0+-200	09891	RK73H1J6811F
R37	0699-3970	1	RESISTOR 10K +-1% .063W TKF TC0+-200	09891	RK73H1J1002F
R38	0699-3970	1	RESISTOR 10K +-1% .063W TKF TC0+-200	09891	RK73H1J1002F
R39	0699-3970	1	RESISTOR 10K +-1% .063W TKF TC0+-200	09891	RK73H1J1002F
R40	0699-3924	1	RESISTOR 100 +-1% .063W TKF TC0+-200	00746	MCR03-F-1000
R41	0699-3924	1	RESISTOR 100 +-1% .063W TKF TC0+-200	00746	MCR03-F-1000
R42	0699-3947	1	RESISTOR 1K +-1% .063W TKF TC0+-200	00746	MCR03-F-1001
R43	0699-3947	1	RESISTOR 1K +-1% .063W TKF TC0+-200	00746	MCR03-F-1001
R44	0699-3947	1	RESISTOR 1K +-1% .063W TKF TC0+-200	00746	MCR03-F-1001
R45	0699-2847	1	RESISTOR 2K +-0.1% .125W TF TC0+-25	01172	BLU-1206 2K .1% 25PPM
R46	0699-2838	1	RESISTOR 40K +-0.1% .125W TF TC0+-25	01172	BLU-1206 40K .1% 25PPM
R47	0699-2489	1	RESISTOR 10K +-0.1% .125W TF TC0+-25	01172	BLU-1206 10K .1% 25PPM
R48	0699-2489	1	RESISTOR 10K +-0.1% .125W TF TC0+-25	01172	BLU-1206 10K .1% 25PPM
R49	0699-2489	1	RESISTOR 10K +-0.1% .125W TF TC0+-25	01172	BLU-1206 10K .1% 25PPM

 **Indicates factory-selected value*

Agilent Part Number E4403-60004
3.0 GHz Tracking Generator Driver

Reference Designator	Agilent Part Number	Qty	Description	Mgr Code	Mfr Part Number
R50	0699-2489	1	RESISTOR 10K +-0.1% .125W TF TC0+-25	01172	BLU-1206 10K .1% 25PPM
R51	0699-3973	1	RESISTOR 13.3K +-1% .063W TKF TC0+-200	09891	RK73H1J1332F
R52	0699-2489	1	RESISTOR 10K +-0.1% .125W TF TC0+-25	01172	BLU-1206 10K .1% 25PPM
R53	0699-2491	1	RESISTOR 20K +-0.1% .125W TF TC0+-25	02499	W1206R032002BT
R54	0699-2489	1	RESISTOR 10K +-0.1% .125W TF TC0+-25	01172	BLU-1206 10K .1% 25PPM
R55	0699-2489	1	RESISTOR 10K +-0.1% .125W TF TC0+-25	01172	BLU-1206 10K .1% 25PPM
R56	0699-3953	1	RESISTOR 1.78K +-1% .063W TKF TC0+-200	00746	MCR03-F-1781
R57	0699-3918	1	RESISTOR 51.1 +-1% .063W TKF TC0+-200	00746	MCR03-F-51R1
R58	0699-3918	1	RESISTOR 51.1 +-1% .063W TKF TC0+-200	00746	MCR03-F-51R1
R59	0699-3921	1	RESISTOR 75 +-1% .063W TKF TC0+-200	00746	MCR03-F-75R0
R60	0699-3935	1	RESISTOR 287 +-1% .063W TKF TC0+-200	00746	MCR03-F-2870
R61	0699-3935	1	RESISTOR 287 +-1% .063W TKF TC0+-200	00746	MCR03-F-2870
R62	0699-3924	1	RESISTOR 100 +-1% .063W TKF TC0+-200	00746	MCR03-F-1000
R63	0699-3935	1	RESISTOR 287 +-1% .063W TKF TC0+-200	00746	MCR03-F-2870
R64	0699-3935	1	RESISTOR 287 +-1% .063W TKF TC0+-200	00746	MCR03-F-2870
R65	0699-3929	1	RESISTOR 162 +-1% .063W TKF TC0+-200	09891	RK73H1J1620F
R66	0699-3907	1	RESISTOR 17.8 +-1% .063W TKF TC0+-200	09891	RK73H1J17R8F
R67	0699-3907	1	RESISTOR 17.8 +-1% .063W TKF TC0+-200	09891	RK73H1J17R8F
R68	0699-3909	1	RESISTOR 21.5 +-1% .063W TKF TC0+-200	09891	RK73H1J21R5F
R69	0699-3934	1	RESISTOR 261 +-1% .063W TKF TC0+-200	09891	RK73H1J2610F
R70	0699-3934	1	RESISTOR 261 +-1% .063W TKF TC0+-200	09891	RK73H1J2610F
R71	0699-3918	1	RESISTOR 51.1 +-1% .063W TKF TC0+-200	00746	MCR03-F-51R1
R72	0699-3918	1	RESISTOR 51.1 +-1% .063W TKF TC0+-200	00746	MCR03-F-51R1
R73	0699-3918	1	RESISTOR 51.1 +-1% .063W TKF TC0+-200	00746	MCR03-F-51R1
R74	0699-3918	1	RESISTOR 51.1 +-1% .063W TKF TC0+-200	00746	MCR03-F-51R1
R75	0699-3921	1	RESISTOR 75 +-1% .063W TKF TC0+-200	00746	MCR03-F-75R0
R76	0699-3921	1	RESISTOR 75 +-1% .063W TKF TC0+-200	00746	MCR03-F-75R0

Agilent Part Number E4403-60004
3.0 GHz Tracking Generator Driver

Reference Designator	Agilent Part Number	Qty	Description	Mgr Code	Mfr Part Number
R77	0699-3921	1	RESISTOR 75 +-1% .063W TKF TC0+-200	00746	MCR03-F-75R0
R78	0699-3921	1	RESISTOR 75 +-1% .063W TKF TC0+-200	00746	MCR03-F-75R0
R79	0699-3924	1	RESISTOR 100 +-1% .063W TKF TC0+-200	00746	MCR03-F-1000
R80	0699-3924	1	RESISTOR 100 +-1% .063W TKF TC0+-200	00746	MCR03-F-1000
R81	0699-3924	1	RESISTOR 100 +-1% .063W TKF TC0+-200	00746	MCR03-F-1000
R82	0699-3924	1	RESISTOR 100 +-1% .063W TKF TC0+-200	00746	MCR03-F-1000
R83	0699-3929	1	RESISTOR 162 +-1% .063W TKF TC0+-200	09891	RK73H1J1620F
R84	0699-3932	1	RESISTOR 215 +-1% .063W TKF TC0+-200	00746	MCR03-F-2150
R85	0699-3932	1	RESISTOR 215 +-1% .063W TKF TC0+-200	00746	MCR03-F-2150
R86	0699-3929	1	RESISTOR 162 +-1% .063W TKF TC0+-200	09891	RK73H1J1620F
R87	0699-3909	1	RESISTOR 21.5 +-1% .063W TKF TC0+-200	09891	RK73H1J21R5F
R88	0699-3909	1	RESISTOR 21.5 +-1% .063W TKF TC0+-200	09891	RK73H1J21R5F
R89	0699-3924	1	RESISTOR 100 +-1% .063W TKF TC0+-200	00746	MCR03-F-1000
R94	0699-3978	1	RESISTOR 21.5K +-1% .063W TKF TC0+-200	09891	RK73H1J2152F
R99	0699-3921	1	RESISTOR 75 +-1% .063W TKF TC0+-200	00746	MCR03-F-75R0
R100	0699-3956	1	RESISTOR 2.37K +-1% .063W TKF TC0+-200	09891	RK73H1J2371F
R101	0699-3956	1	RESISTOR 2.37K +-1% .063W TKF TC0+-200	09891	RK73H1J2371F
R102	0699-3918	1	RESISTOR 51.1 +-1% .063W TKF TC0+-200	00746	MCR03-F-51R1
R103	0699-3920	1	RESISTOR 68.1 +-1% .063W TKF TC0+-200	09891	RK73H1J68R1F
R104	0699-3918	1	RESISTOR 51.1 +-1% .063W TKF TC0+-200	00746	MCR03-F-51R1
R107	0699-3966	1	RESISTOR 6.81K +-1% .063W TKF TC0+-200	09891	RK73H1J6811F
R108	0699-3966	1	RESISTOR 6.81K +-1% .063W TKF TC0+-200	09891	RK73H1J6811F
R109	0699-3920	1	RESISTOR 68.1 +-1% .063W TKF TC0+-200	09891	RK73H1J68R1F
R110	0699-3920	1	RESISTOR 68.1 +-1% .063W TKF TC0+-200	09891	RK73H1J68R1F
R111	0699-3942	1	RESISTOR 619 +-1% .063W TKF TC0+-200	00746	MCR03-F-6190
R112	0699-3942	1	RESISTOR 619 +-1% .063W TKF TC0+-200	00746	MCR03-F-6190
R113	0699-3942	1	RESISTOR 619 +-1% .063W TKF TC0+-200	00746	MCR03-F-6190
R114	0699-3966	1	RESISTOR 6.81K +-1% .063W TKF TC0+-200	09891	RK73H1J6811F
R115	0699-3918	1	RESISTOR 51.1 +-1% .063W TKF TC0+-200	00746	MCR03-F-51R1
R116	0699-3942	1	RESISTOR 619 +-1% .063W TKF TC0+-200	00746	MCR03-F-6190

 **Indicates factory-selected value*

Agilent Part Number E4403-60004
3.0 GHz Tracking Generator Driver

Reference Designator	Agilent Part Number	Qty	Description	Mgr Code	Mfr Part Number
R117	0699-3942	1	RESISTOR 619 +-1% .063W TKF TC0+-200	00746	MCR03-F-6190
R118	0699-3942	1	RESISTOR 619 +-1% .063W TKF TC0+-200	00746	MCR03-F-6190
R119	0699-3942	1	RESISTOR 619 +-1% .063W TKF TC0+-200	00746	MCR03-F-6190
R120	0699-3942	1	RESISTOR 619 +-1% .063W TKF TC0+-200	00746	MCR03-F-6190
R121	0699-3952	1	RESISTOR 1.62K +-1% .063W TKF TC0+-200	09891	RK73H1J1621F
R122	0699-3952	1	RESISTOR 1.62K +-1% .063W TKF TC0+-200	09891	RK73H1J1621F
R123	0699-3982	1	RESISTOR 31.6K +-1% .063W TKF TC0+-200	09891	RK73H1J3162F
R124	0699-3920	1	RESISTOR 68.1 +-1% .063W TKF TC0+-200	09891	RK73H1J68R1F
R125	0699-3920	1	RESISTOR 68.1 +-1% .063W TKF TC0+-200	09891	RK73H1J68R1F
R126	0699-3920	1	RESISTOR 68.1 +-1% .063W TKF TC0+-200	09891	RK73H1J68R1F
R127	0699-3920	1	RESISTOR 68.1 +-1% .063W TKF TC0+-200	09891	RK73H1J68R1F
R128	0699-3920	1	RESISTOR 68.1 +-1% .063W TKF TC0+-200	09891	RK73H1J68R1F
R129	0699-3982	1	RESISTOR 31.6K +-1% .063W TKF TC0+-200	09891	RK73H1J3162F
R130	0699-3982	1	RESISTOR 31.6K +-1% .063W TKF TC0+-200	09891	RK73H1J3162F
R131	0699-3924	1	RESISTOR 100 +-1% .063W TKF TC0+-200	00746	MCR03-F-1000
R132	0699-3924	1	RESISTOR 100 +-1% .063W TKF TC0+-200	00746	MCR03-F-1000
R133	0699-3924	1	RESISTOR 100 +-1% .063W TKF TC0+-200	00746	MCR03-F-1000
R134	0699-3918	1	RESISTOR 51.1 +-1% .063W TKF TC0+-200	00746	MCR03-F-51R1
R135	0699-3918	1	RESISTOR 51.1 +-1% .063W TKF TC0+-200	00746	MCR03-F-51R1
R136	0699-3982	1	RESISTOR 31.6K +-1% .063W TKF TC0+-200	09891	RK73H1J3162F
R137	0699-3982	1	RESISTOR 31.6K +-1% .063W TKF TC0+-200	09891	RK73H1J3162F
R138	0699-3982	1	RESISTOR 31.6K +-1% .063W TKF TC0+-200	09891	RK73H1J3162F
R139	0699-3918	1	RESISTOR 51.1 +-1% .063W TKF TC0+-200	00746	MCR03-F-51R1
R140	0699-3918	1	RESISTOR 51.1 +-1% .063W TKF TC0+-200	00746	MCR03-F-51R1
R141	0699-3918	1	RESISTOR 51.1 +-1% .063W TKF TC0+-200	00746	MCR03-F-51R1
R142	0699-3956	1	RESISTOR 2.37K +-1% .063W TKF TC0+-200	09891	RK73H1J2371F
R143	0699-3956	1	RESISTOR 2.37K +-1% .063W TKF TC0+-200	09891	RK73H1J2371F
R144	0699-3956	1	RESISTOR 2.37K +-1% .063W TKF TC0+-200	09891	RK73H1J2371F
R145	0699-3956	1	RESISTOR 2.37K +-1% .063W TKF TC0+-200	09891	RK73H1J2371F
R146	0699-3956	1	RESISTOR 2.37K +-1% .063W TKF TC0+-200	09891	RK73H1J2371F

Agilent Part Number E4403-60004
3.0 GHz Tracking Generator Driver

Reference Designator	Agilent Part Number	Qty	Description	Mgr Code	Mfr Part Number
R147	0699-3956	1	RESISTOR 2.37K +-1% .063W TKF TC0+-200	09891	RK73H1J2371F
R149	0699-3934	1	RESISTOR 261 +-1% .063W TKF TC0+-200	09891	RK73H1J2610F
R150	0699-3969	1	RESISTOR 9.09K +-1% .063W TKF TC0+-200	09891	RK73H1J9091F
R151	0699-3970	1	RESISTOR 10K +-1% .063W TKF TC0+-200	09891	RK73H1J1002F
R152	0699-3970	1	RESISTOR 10K +-1% .063W TKF TC0+-200	09891	RK73H1J1002F
R153	0699-3970	1	RESISTOR 10K +-1% .063W TKF TC0+-200	09891	RK73H1J1002F
R154	0699-3945	1	RESISTOR 825 +-1% .063W TKF TC0+-200	00746	MCR03-F-8250
R155	0699-3972	1	RESISTOR 12.1K +-1% .063W TKF TC0+-200	09891	RK73H1J1212F
R156	0699-3973	1	RESISTOR 13.3K +-1% .063W TKF TC0+-200	09891	RK73H1J1332F
R157	0699-3922	1	RESISTOR 82.5 +-1% .063W TKF TC0+-200	09891	RK73H1J82R5F
R159	0699-3974	1	RESISTOR 14.7K +-1% .063W TKF TC0+-200	00746	MCR03-F-1472
R160	0699-3951	1	RESISTOR 1.47K +-1% .063W TKF TC0+-200	00746	MCR03-F-1471
R161	0699-3977	1	RESISTOR 19.6K +-1% .063W TKF TC0+-200	09891	RK73H1J1962F
R162	0699-3984	1	RESISTOR 38.3K +-1% .063W TKF TC0+-200	09891	RK73H1J3832F
R163	0699-3984	1	RESISTOR 38.3K +-1% .063W TKF TC0+-200	09891	RK73H1J3832F
R164	0699-3982	1	RESISTOR 31.6K +-1% .063W TKF TC0+-200	09891	RK73H1J3162F
R165	0699-3984	1	RESISTOR 38.3K +-1% .063W TKF TC0+-200	09891	RK73H1J3832F
R166	0699-3951	1	RESISTOR 1.47K +-1% .063W TKF TC0+-200	00746	MCR03-F-1471
R167	0699-3942	1	RESISTOR 619 +-1% .063W TKF TC0+-200	00746	MCR03-F-6190
R168	0699-4016	1	RESISTOR 1M +-1% .063W TKF TC0+-200	00746	MCR03-F-1004
R169	0699-3999	1	RESISTOR 178K +-1% .063W TKF TC0+-200	09891	RK73H1J1783F
R170	0699-3992	1	RESISTOR 90.9K +-1% .063W TKF TC0+-200	09891	RK73H1J9092F
R171	0699-3924	1	RESISTOR 100 +-1% .063W TKF TC0+-200	00746	MCR03-F-1000
R172	0699-3367	1	RESISTOR 5.62K +-1% .0625W TKF TC0+-200	00746	MCR03-F-5621
R173	0699-3574	1	RESISTOR 0 .0625W TKF	09891	RM73Z1JT
R174	0699-3367	1	RESISTOR 5.62K +-1% .0625W TKF TC0+-200	00746	MCR03-F-5621
R175	0699-3956	1	RESISTOR 2.37K +-1% .063W TKF TC0+-200	09891	RK73H1J2371F
R176	0699-3956	1	RESISTOR 2.37K +-1% .063W TKF TC0+-200	09891	RK73H1J2371F
R177	0699-3957	1	RESISTOR 2.61K +-1% .063W TKF TC0+-200	09891	RK73H1J2611F
R178	0699-3940	1	RESISTOR 464 +-1% .063W TKF TC0+-200	09891	RK73H1J4640F

 **Indicates factory-selected value*

Agilent Part Number E4403-60004
3.0 GHz Tracking Generator Driver

Reference Designator	Agilent Part Number	Qty	Description	Mgr Code	Mfr Part Number
R179	0699-3918	1	RESISTOR 51.1 +-1% .063W TKF TC0+-200	00746	MCR03-F-51R1
R300	0699-3921	1	RESISTOR 75 +-1% .063W TKF TC0+-200	00746	MCR03-F-75R0
R301	0699-2489	1	RESISTOR 10K +-0.1% .125W TF TC0+-25	01172	BLU-1206 10K .1% 25PPM
R302	0699-3960	1	RESISTOR 3.48K +-1% .063W TKF TC0+-200	09891	RK73H1J3481F
R303	0699-3574	1	RESISTOR 0 .0625W TKF	09891	RM73Z1JT
R304	0699-3947	1	RESISTOR 1K +-1% .063W TKF TC0+-200	00746	MCR03-F-1001
R310	0699-3924	1	RESISTOR 100 +-1% .063W TKF TC0+-200	00746	MCR03-F-1000
R311	0699-3924	1	RESISTOR 100 +-1% .063W TKF TC0+-200	00746	MCR03-F-1000
R315	0699-3964	1	RESISTOR 5.11K +-1% .063W TKF TC0+-200	09891	RK73H1J5111F
R316	0699-3964	1	RESISTOR 5.11K +-1% .063W TKF TC0+-200	09891	RK73H1J5111F
R317	0699-3977	1	RESISTOR 19.6K +-1% .063W TKF TC0+-200	09891	RK73H1J1962F
R318	0699-3977	1	RESISTOR 19.6K +-1% .063W TKF TC0+-200	09891	RK73H1J1962F
R319	0699-3977	1	RESISTOR 19.6K +-1% .063W TKF TC0+-200	09891	RK73H1J1962F
R320	0699-3977	1	RESISTOR 19.6K +-1% .063W TKF TC0+-200	09891	RK73H1J1962F
R321	0699-3977	1	RESISTOR 19.6K +-1% .063W TKF TC0+-200	09891	RK73H1J1962F
R322	0699-3977	1	RESISTOR 19.6K +-1% .063W TKF TC0+-200	09891	RK73H1J1962F
R323	0699-3977	1	RESISTOR 19.6K +-1% .063W TKF TC0+-200	09891	RK73H1J1962F
R324	0699-3977	1	RESISTOR 19.6K +-1% .063W TKF TC0+-200	09891	RK73H1J1962F
R325	0699-3966	1	RESISTOR 6.81K +-1% .063W TKF TC0+-200	09891	RK73H1J6811F
R326	0699-3966	1	RESISTOR 6.81K +-1% .063W TKF TC0+-200	09891	RK73H1J6811F
R327	0699-3966	1	RESISTOR 6.81K +-1% .063W TKF TC0+-200	09891	RK73H1J6811F
R328	0699-3932	1	RESISTOR 215 +-1% .063W TKF TC0+-200	00746	MCR03-F-2150
U1	1826-1826	1	IC PWR MGT-V-REG-ADJ-POS 1.2/37V 8 PINS	03406	LM317LM
U2	E4401-80011	1	PAL	28480	E4401-80011
U3	E4403-80012	1	PGMD HDR U3	28480	E4403-80012
U4	1820-5941	1	IC DCDR-DEMUXR CMOS/ACT BIN 8-TO-1-LINE	02237	74ACT138SCX.

Agilent Part Number E4403-60004
3.0 GHz Tracking Generator Driver

Reference Designator	Agilent Part Number	Qty	Description	Mgr Code	Mfr Part Number
U5	1820-5941	1	IC DCDR-DEMUXR CMOS/ACT BIN 8-TO-1-LINE	02237	74ACT138SCX.
U6	1820-6277	1	IC SHF-RGTR CMOS/HC SYNC/ASYNC SERIAL-IN	02237	MM74HC595M
U7	1820-5939	1	IC INV CMOS/ACT HEX	02237	74ACT04SCX.
U8	1820-5804	1	IC SHF-RGTR CMOS/HC SYNC/ASYNC	01698	SN74HC165D
U9	1820-6473	1	IC FF CMOS/ACT D-TYPE POS-EDGE-TRIG	01698	SN74ACT74D
U10	1820-8830	1	IC MUXR/DATA-SEL CMOS/ACT 8-TO-1-LINE	02237	74ACT251SCX
U11	1826-1623	1	IC COMPARATOR GP DUAL 14 PIN PLSTC-SOIC	03406	LM319M
U13	1826-2147	1	ANALOG MULTIPLEXER 8 CHNL 16-P-SOIC	05524	DG408DY
U14	1820-6277	1	IC SHF-RGTR CMOS/HC SYNC/ASYNC SERIAL-IN	02237	MM74HC595M
U15	1858-0104	1	TRANSISTOR ARRAY 16-PIN PLSTC SUR-FACE	01698	ULN2003AD
U16	1820-6277	1	IC SHF-RGTR CMOS/HC SYNC/ASYNC SERIAL-IN	02237	MM74HC595M
U17	1820-6277	1	IC SHF-RGTR CMOS/HC SYNC/ASYNC SERIAL-IN	02237	MM74HC595M
U18	1820-6154	1	IC-PROGRAMMABLE INTERVAL TIMER	28480	1820-6154
U19	1820-5940	1	IC GATE CMOS/ACT AND QUAD 2-INP	02237	74ACT08SCX.
U20	1826-2153	1	D/A 12-BIT 20-PLCC CMOS	03285	AD7545AKP
U21	1820-7247	1	IC CNTR CMOS/AC BIN UP/DOWN SYNC/ ASYNC	02237	74AC191SCX.
U22	1820-6277	1	IC SHF-RGTR CMOS/HC SYNC/ASYNC SERIAL-IN	02237	MM74HC595M
U23	1820-7247	1	IC CNTR CMOS/AC BIN UP/DOWN SYNC/ ASYNC	02237	74AC191SCX.
U24	1820-6277	1	IC SHF-RGTR CMOS/HC SYNC/ASYNC SERIAL-IN	02237	MM74HC595M
U26	1820-7247	1	IC CNTR CMOS/AC BIN UP/DOWN SYNC/ ASYNC	02237	74AC191SCX.
U27	1826-1950	1	IC COMPARATOR HS SINGLE 8 PIN PLSTC-SOIC	10858	LT1016CS8

 **Indicates factory-selected value*

Agilent Part Number E4403-60004
3.0 GHz Tracking Generator Driver

Reference Designator	Agilent Part Number	Qty	Description	Mgr Code	Mfr Part Number
U28	1826-2722	1	D/A 12-BIT 16-P-SOIC CMOS	03285	AD7243AR
U29	1826-1862	1	IC OP AMP LOW-BIAS-H-IMPD DUAL 8 PIN	04078	TL072CD
U30	1826-1862	1	IC OP AMP LOW-BIAS-H-IMPD DUAL 8 PIN	04078	TL072CD
U31	1826-2722	1	D/A 12-BIT 16-P-SOIC CMOS	03285	AD7243AR
U32	1826-1862	1	IC OP AMP LOW-BIAS-H-IMPD DUAL 8 PIN	04078	TL072CD
U33	1826-1862	1	IC OP AMP LOW-BIAS-H-IMPD DUAL 8 PIN	04078	TL072CD
U34	1826-1622	1	IC OP AMP LOW-BIAS-H-IMPD QUAD 14 PIN	01698	TL074CD
U35	1826-1862	1	IC OP AMP LOW-BIAS-H-IMPD DUAL 8 PIN	04078	TL072CD
U36	1826-2149	1	ANALOG SWITCH 4 SPST 16 -P-SOIC	05524	DG444DY
U37	1826-1622	1	IC OP AMP LOW-BIAS-H-IMPD QUAD 14 PIN	01698	TL074CD
U38	1826-1572	1	IC COMPARATOR PRCN DUAL 8 PIN PLSTC-SOIC	02910	LM393D
U39	1826-1458	1	D/A 8-DGT 16-P-SOIC	02910	DAC-08ED
U40	1826-3000	1	IC AUDIO AMPL LOW-NOISE DUAL 8 PIN	03285	OP275GS
U41	1820-4861	1	IC BFR TTL/F NAND QUAD 2-INP	02910	N74F38D-T
U50	1820-4693	1	IC GATE CMOS/HC AND QUAD 2-INP	01698	SN74HC08D
U60	1826-1862	1	IC OP AMP LOW-BIAS-H-IMPD DUAL 8 PIN	04078	TL072CD

5300 C-E4403-60004-2

SYM	REVISIONS	APPROVED	DATE

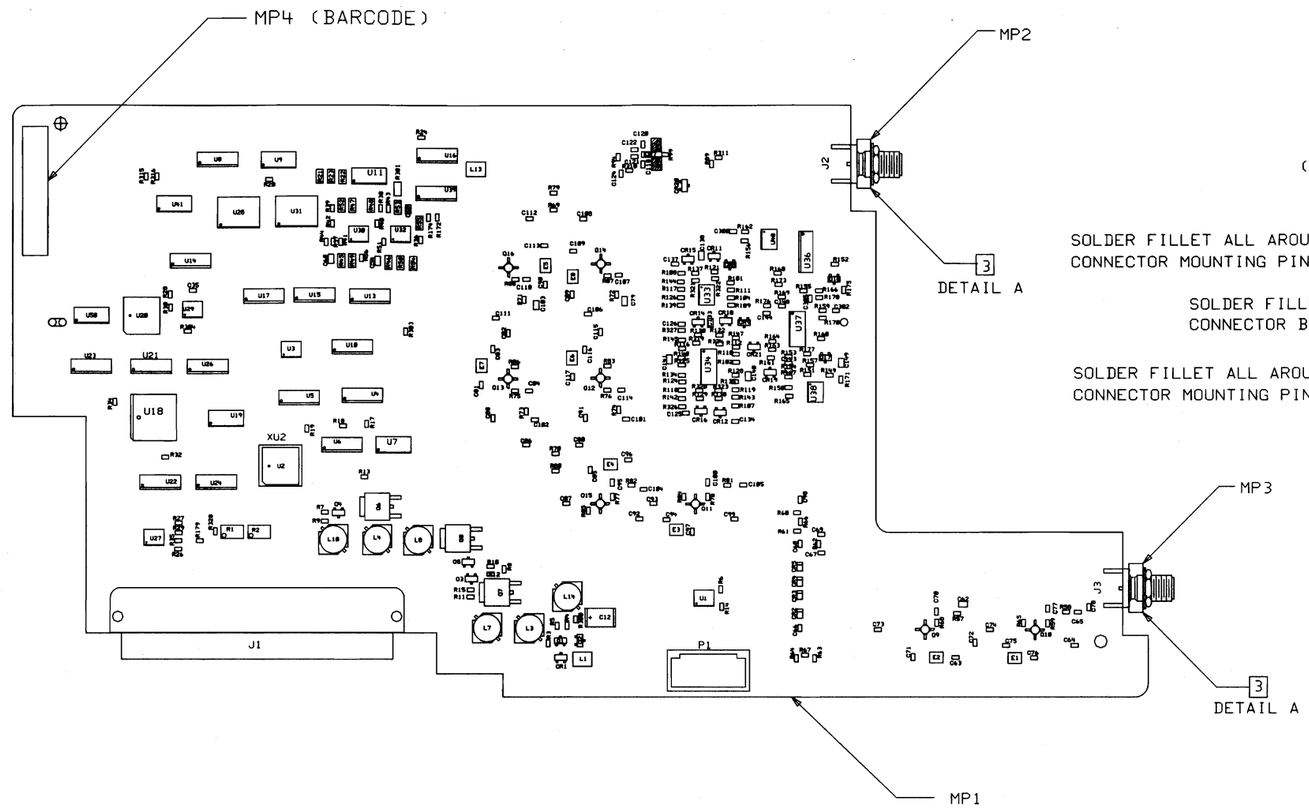

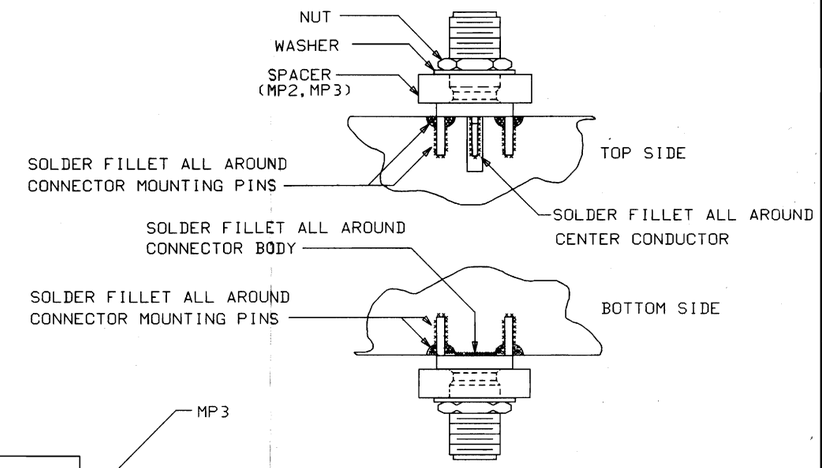

DETAIL A
SCALE NONE
2 PLACES

NOTES: UNLESS OTHERWISE SPECIFIED

1. THIS BOARD HAS .010 VIAS IN SMT PADS.
2. THIS ASSEMBLY USES RAW BOARD E4403-20004
3. TORQUE TO 10 IN-LBS.
4. PART NUMBERS 9135-0461 (FL1-4) MUST NOT BE EXPOSED TO HALIDE CONTAINING ACID FLUXES
5. CROSS HATCHED COMPONENTS ARE NOT LOADED

TOP SIDE

SEE MATERIAL LIST E4403-63004

AGILENT TECHNOLOGIES
RESTRICTED
THIS DOCUMENT CONTAINS CONFIDENTIAL, PROPRIETARY INFORMATION THAT IS AGILENT TECHNOLOGIES PROPERTY. DO NOT DISCLOSE TO OR DUPLICATE FOR OTHERS EXCEPT AS AUTHORIZED BY AGILENT TECHNOLOGIES.

UNLESS OTHERWISE SPECIFIED, DIMENSIONS ARE IN INCHES.
TOLERANCES: XX.XXX ±.010
XX.XX ±.02
THIRD ANGLE PROJECTION
DO NOT SCALE THIS DRAWING

ASSEMBLY, PWB
BITG
CONTROL BOARD
TITLE

alaer004
FILENAME
SCALE NONE
SHEET 1 OF 2
E4403-60004
PART NUMBER
C-E4403-60004-2

5300 C-E4403-60004-2

SYM	REVISIONS	APPROVED	DATE

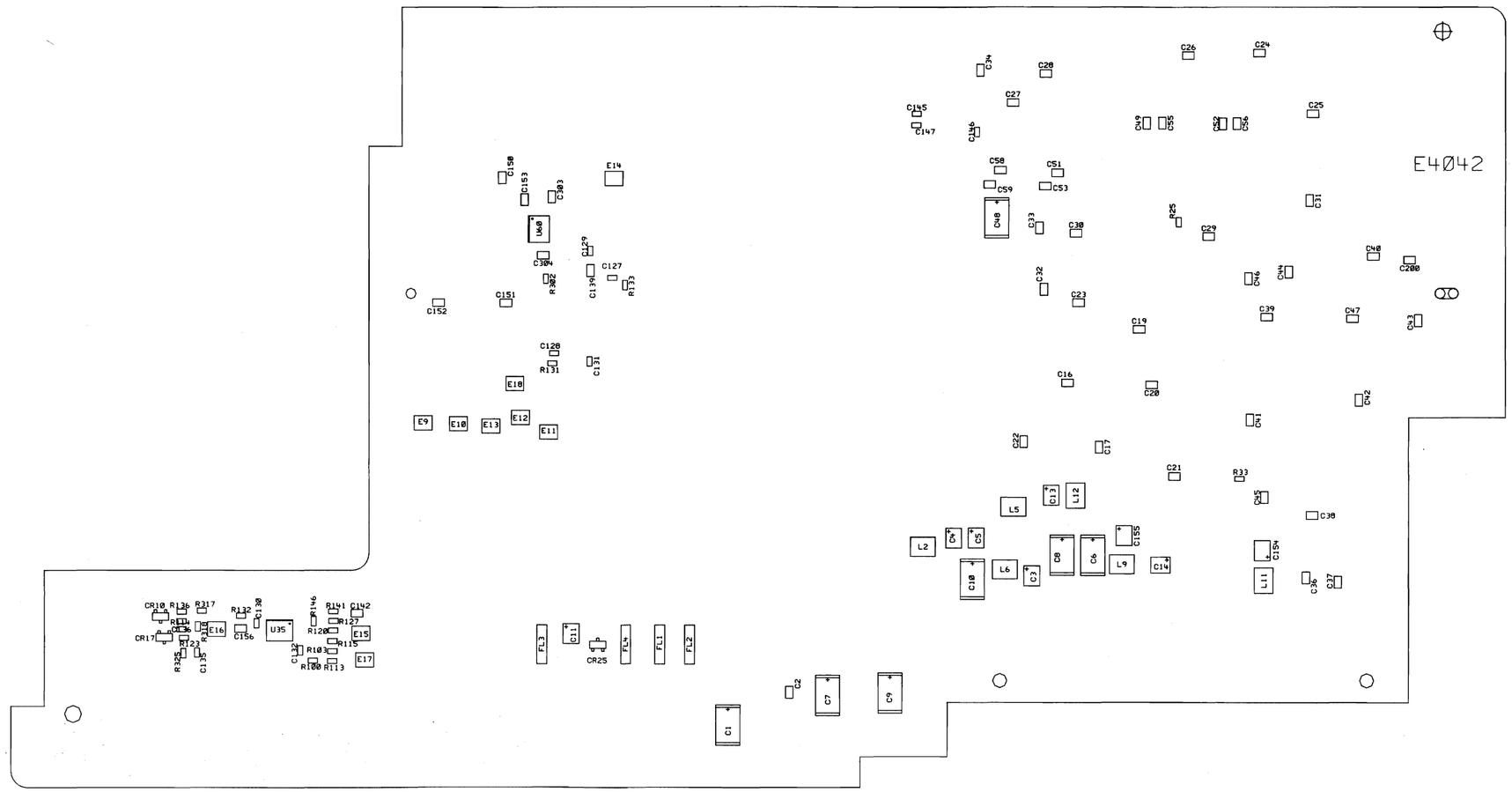

BACK SIDE

AGILENT TECHNOLOGIES
RESTRICTED
THIS DOCUMENT CONTAINS CONFIDENTIAL, PROPRIETARY INFORMATION THAT IS AGILENT TECHNOLOGIES PROPERTY. DO NOT DISCLOSE TO OR DUPLICATE FOR OTHERS EXCEPT AS AUTHORIZED BY AGILENT TECHNOLOGIES.

UNLESS OTHERWISE SPECIFIED, DIMENSIONS ARE IN INCHES.

TOLERANCES: XX.XXX ±.010
XX.XX ±.02

THIRD ANGLE PROJECTION

DO NOT SCALE THIS DRAWING

ASSEMBLY, PWB
BITG
CONTROL BOARD

TITLE

a6aer004
FILENAME

1.5X
SCALE

SHEET 2 OF 2

E4403-60004
PART NUMBER

C-E4403-60004-2

Agilent

D-E4403-60004-1

REV	INFORMATION	APPROVED	DATE
A	AS ISSUED		
B	PER LCNS3-E4401-318 /WW		

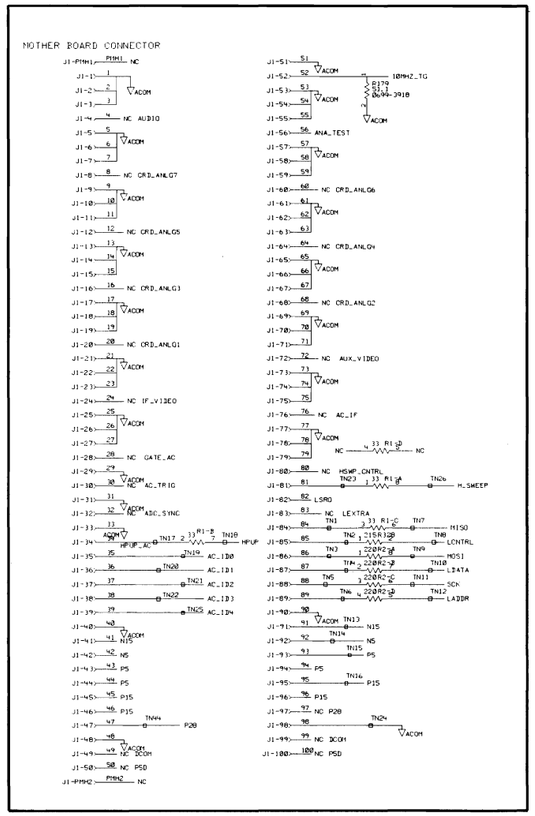

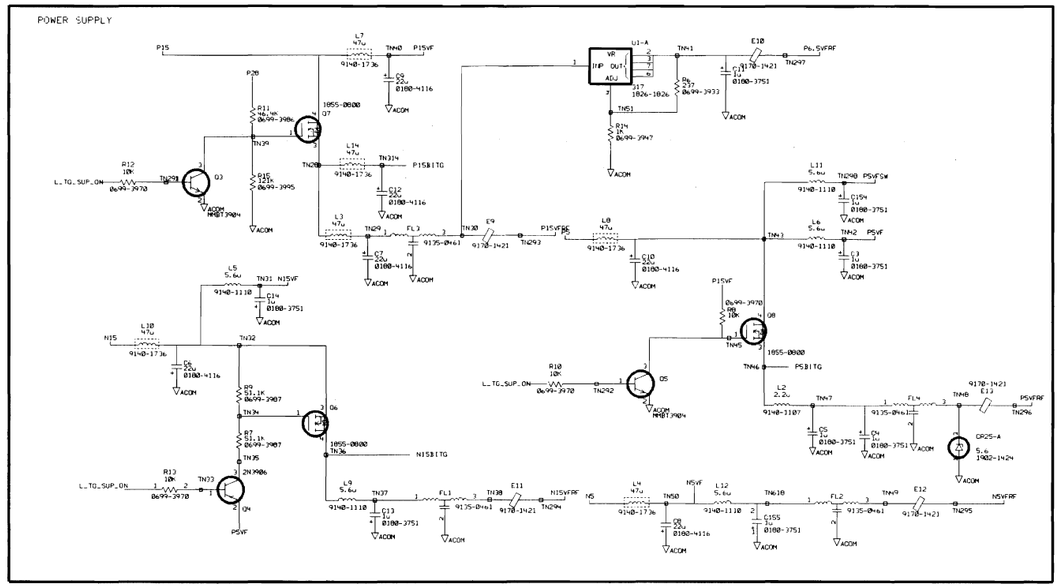

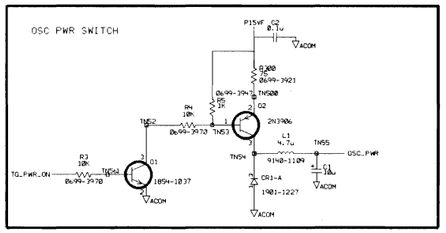

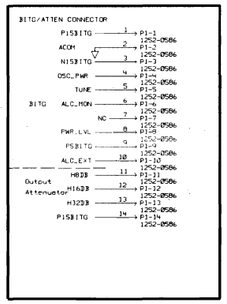

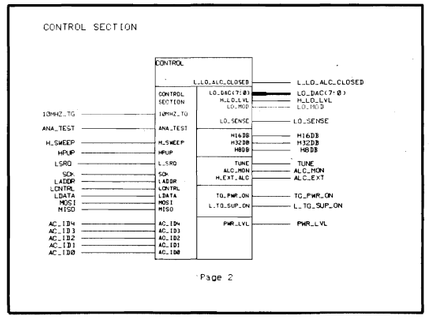

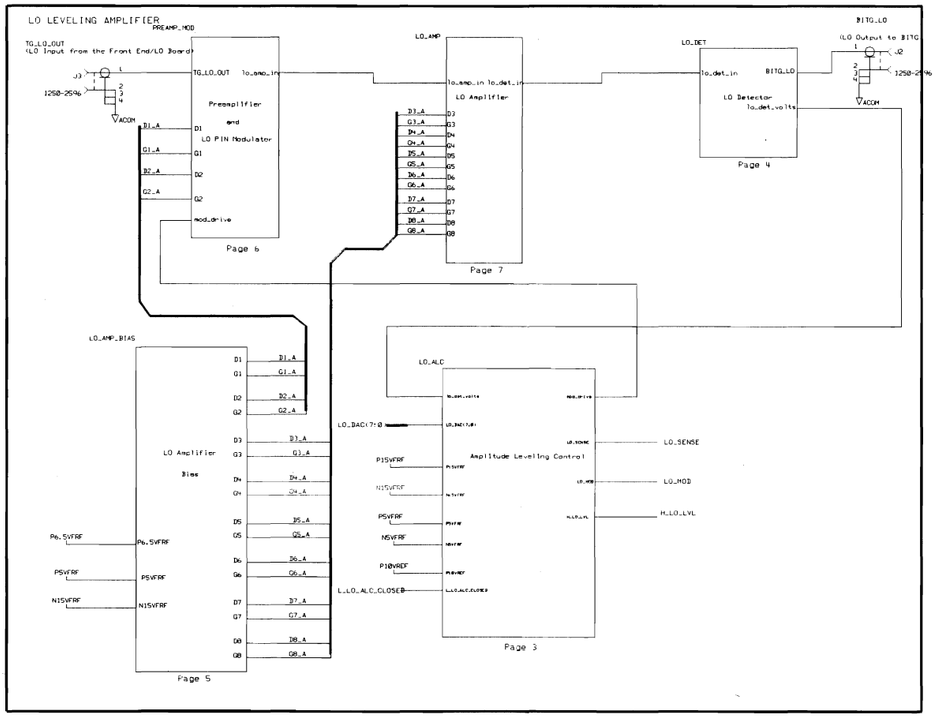

HP RESTRICTED
THIS DOCUMENT CONTAINS CONFIDENTIAL, PROPRIETARY INFORMATION THAT IS HEWLETT-PACKARD (HP) PROPERTY. DO NOT DISCLOSE TO OR DUPLICATE FOR OTHERS EXCEPT AS AUTHORIZED BY HP.

LAST CHECKED	DATE	SCHEMATIC, PWA Built In Tracking Generator (BITG) Control Board	HEWLETT PACKARD
ENGINEER	SHEET 1 OF 1		MID
DRAWN BY	SIZE D	TITLE AHP_MOSQ2_BITG/AB3850/top_level sheet1 PATHNAME	E4403-60004 PART NUMBER
	AB3850 ASSY. REV	B3850 BRD. REV. PAGE 1 OF 7	D-E4403-60004-1 DWG. NO.

REVISIONS
SEE PAGE 1 FOR REVISION HISTORY

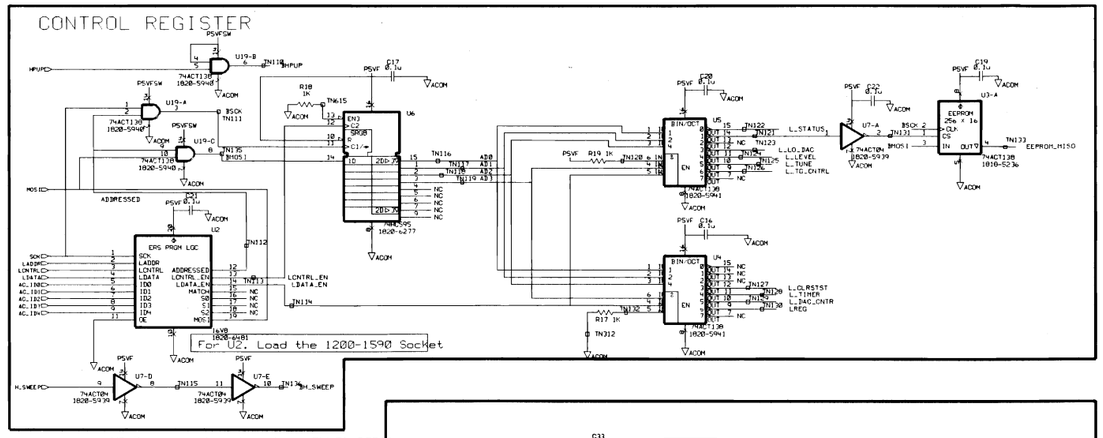

U2 Programmed part number: E4401-80011

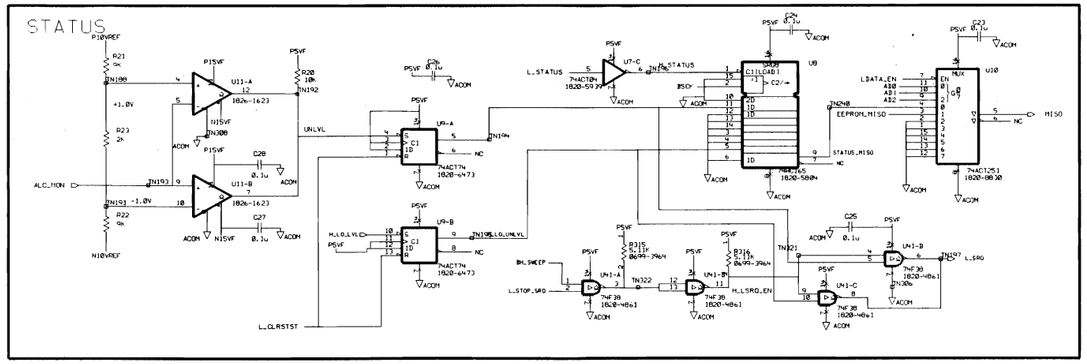

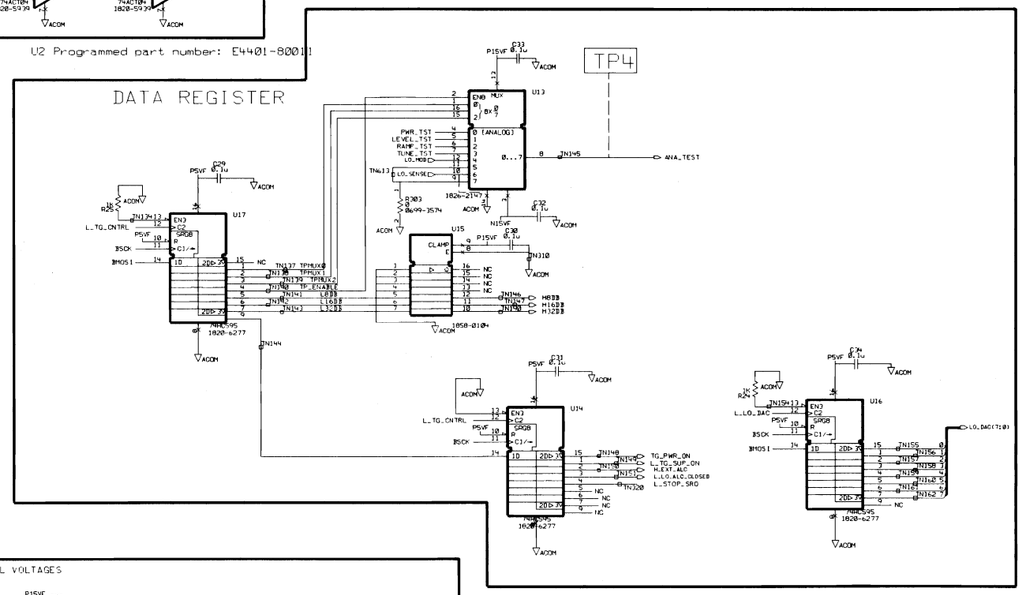

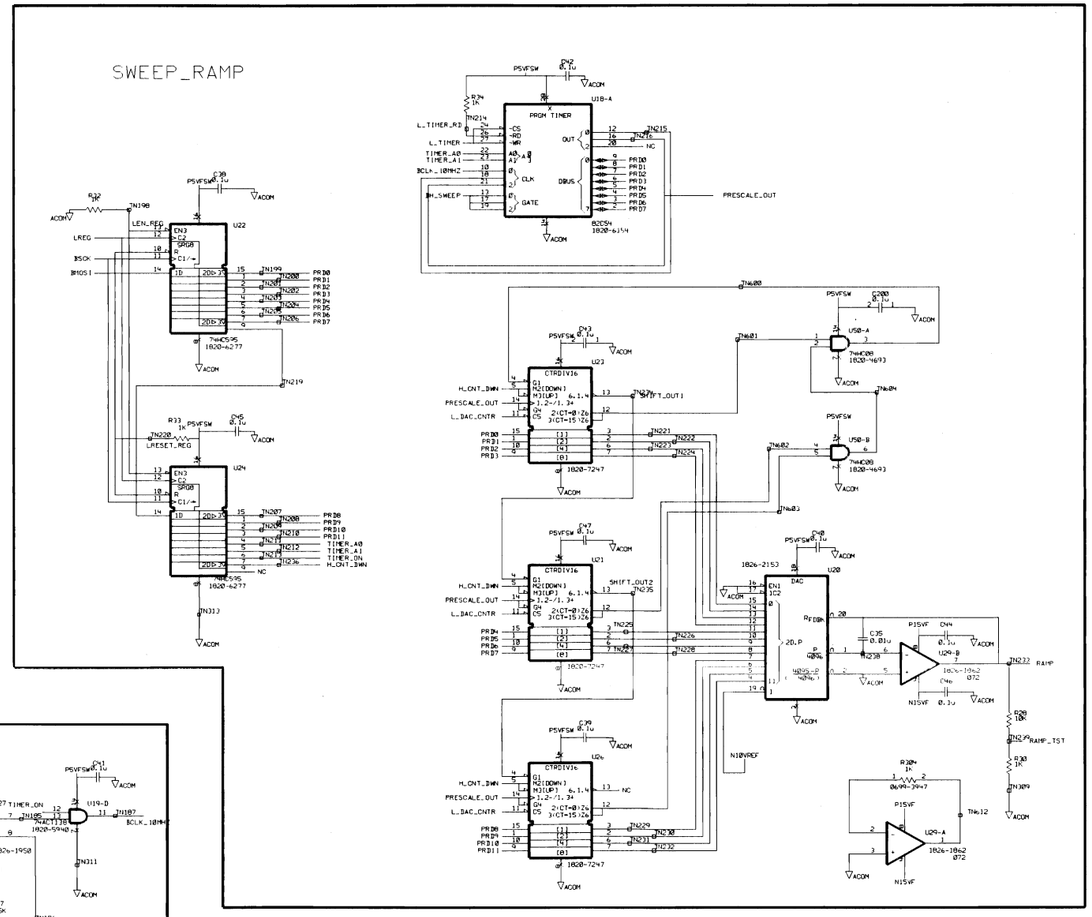

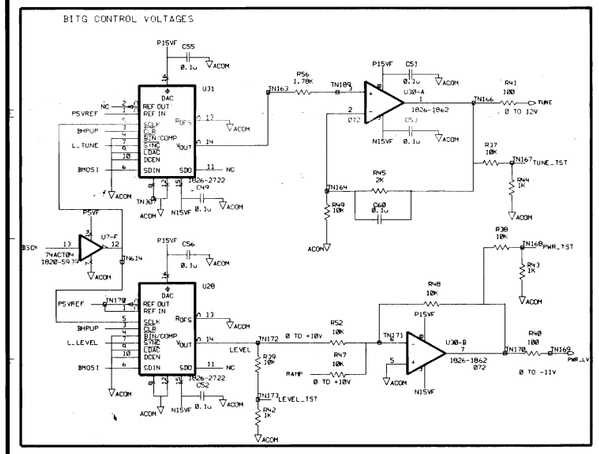

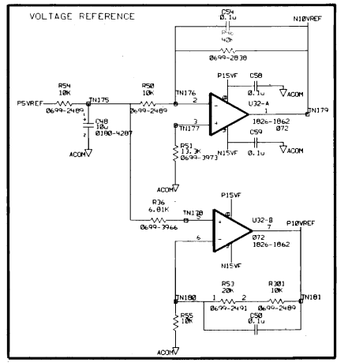

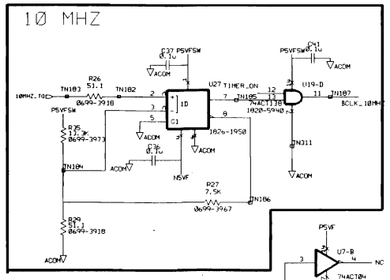

HP RESTRICTED
THIS DOCUMENT CONTAINS CONFIDENTIAL, PROPRIETARY INFORMATION THAT IS HEWLETT-PACKARD (HP) PROPERTY. DO NOT DISCLOSE TO OR DUPLICATE FOR OTHERS EXCEPT AS AUTHORIZED BY HP.

LAST CHECKED	DATE	SCHEMATIC, PWA: Built In Tracking Generator Control Sweep Ramp	HEWLETT PACKARD
ENGINEER	SHEET 1 OF 1	TITLE	
DRAWN BY	SIZE D	E4403-60004	
AB3850	B3850 2 7	D-E4403-60004-1	

REVISIONS
SEE PAGE 1 FOR REVISION HISTORY

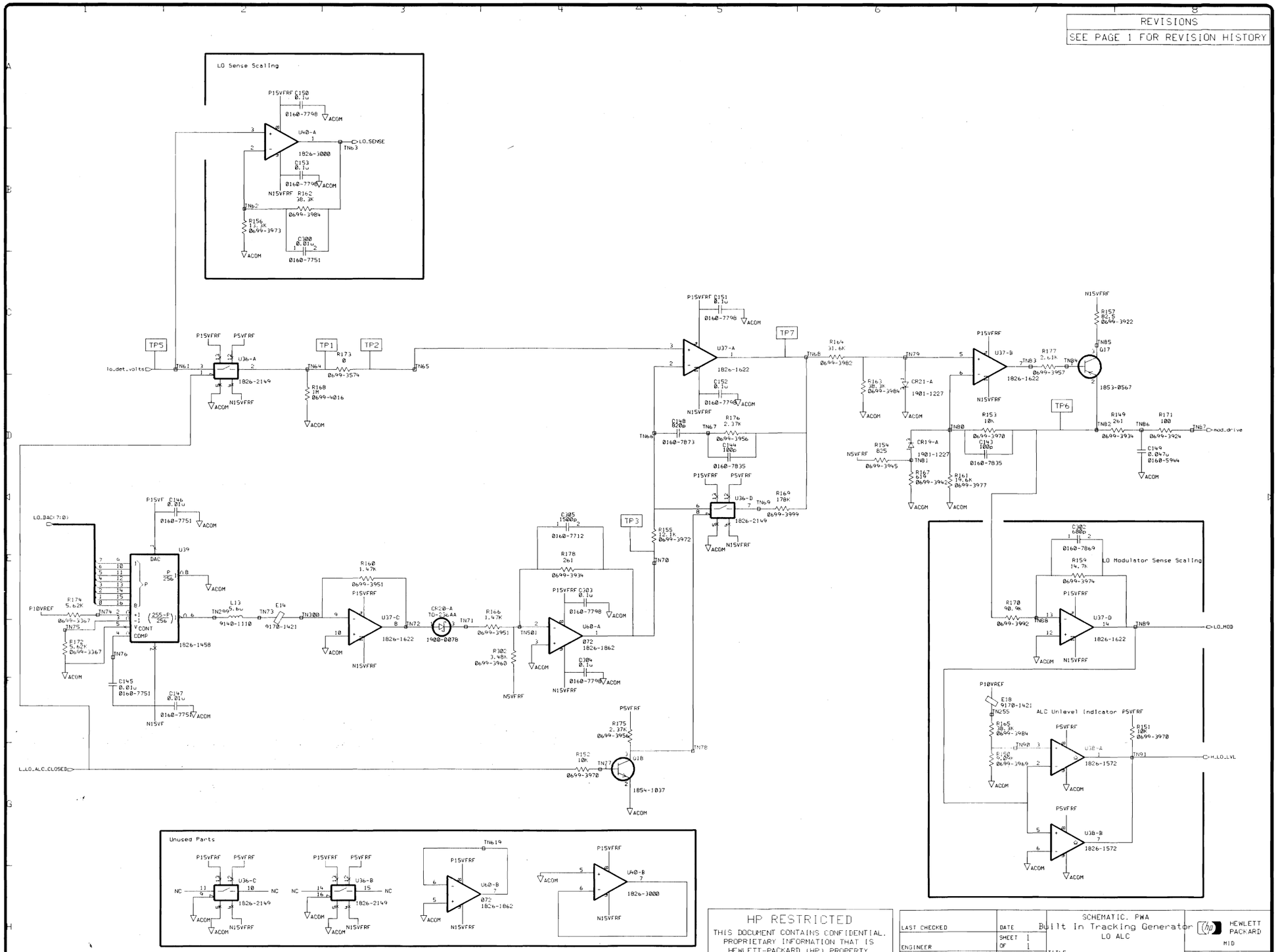

HP RESTRICTED

THIS DOCUMENT CONTAINS CONFIDENTIAL, PROPRIETARY INFORMATION THAT IS HEWLETT-PACKARD (HP) PROPERTY. DO NOT DISCLOSE TO OR DUPLICATE FOR OTHERS EXCEPT AS AUTHORIZED BY HP.

LAST CHECKED	DATE	SCHEMATIC, PWA Built In Tracking Generator LO ALC	HEWLETT PACKARD MID
ENGINEER	SHEET 1 OF 1	TITLE	E4403-60004
DRAWN BY	SIZE C	$HP_MOSQ2_BITG/AB3850/top_level/schematic/schematic_obj/HP_MOSQ2_BITG/current/PART NUMBER	
	AB3850 ASSY. REV	B3850 BRD. REV	3 7 PAGE OF	C-E4403-60004-1 DWG. NO.

REVISIONS
SEE PAGE 1 FOR REVISION HISTORY

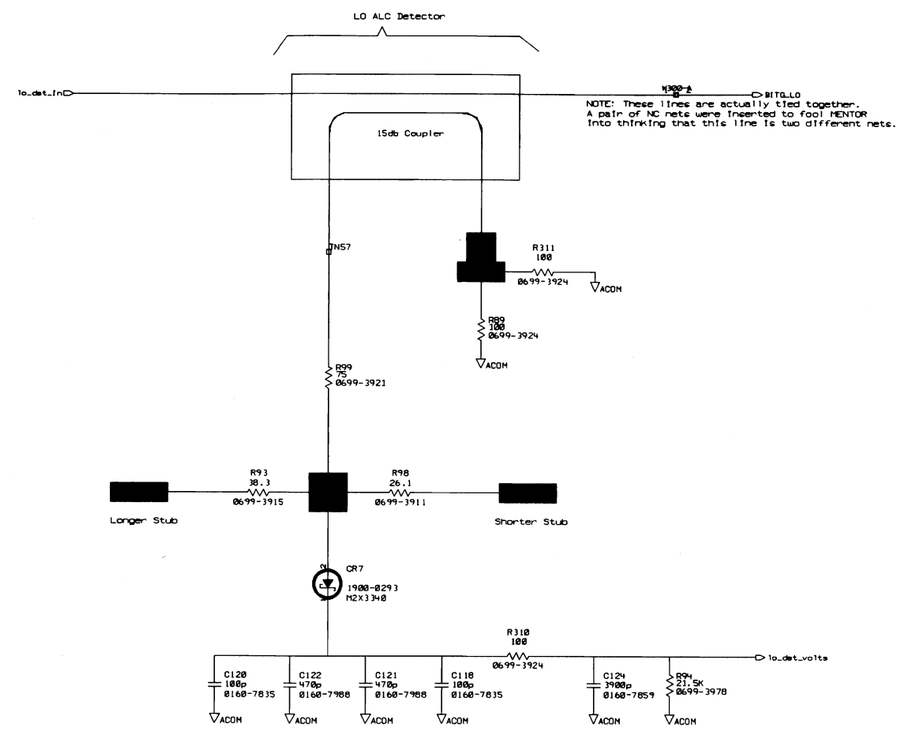

HP RESTRICTED

THIS DOCUMENT CONTAINS CONFIDENTIAL. PROPRIETARY INFORMATION THAT IS HEWLETT-PACKARD (HP) PROPERTY. DO NOT DISCLOSE TO OR DUPLICATE FOR OTHERS EXCEPT AS AUTHORIZED BY HP.

LAST CHECKED	DATE	SCHEMATIC, PWA Built In Tracking Generator LO Detector	HEWLETT PACKARD MID
ENGINEER	SHEET 1 OF 1	TITLE $HP_MOSQ2_BITG/AB3850/top_level/expanded_obj/HP_MOSQ2_BITG/current/schematic	E4403-60004 BASIC NUMBER
DRAWN BY	SIZE C		
	AB3850 ASSY. REV.	B3850 BRD. REV. PAGE 4 OF 7	C-E4403-60004-1 DWG. NO.

REVISIONS
SEE PAGE 1 FOR REVISION HISTORY

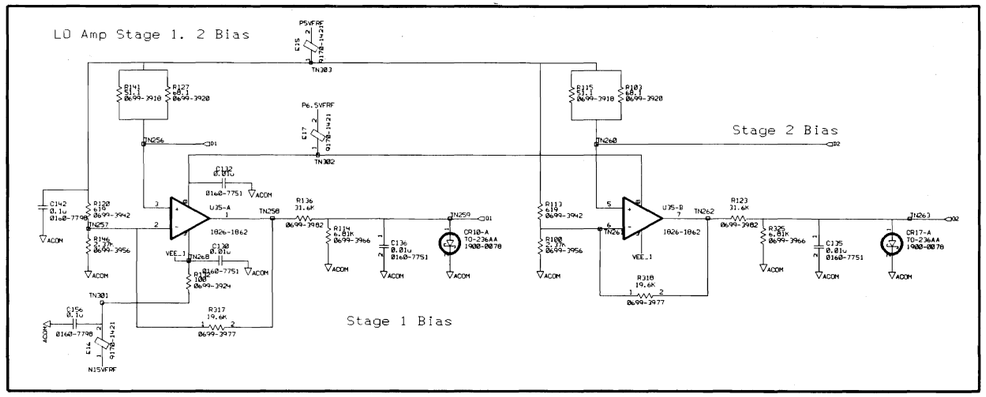

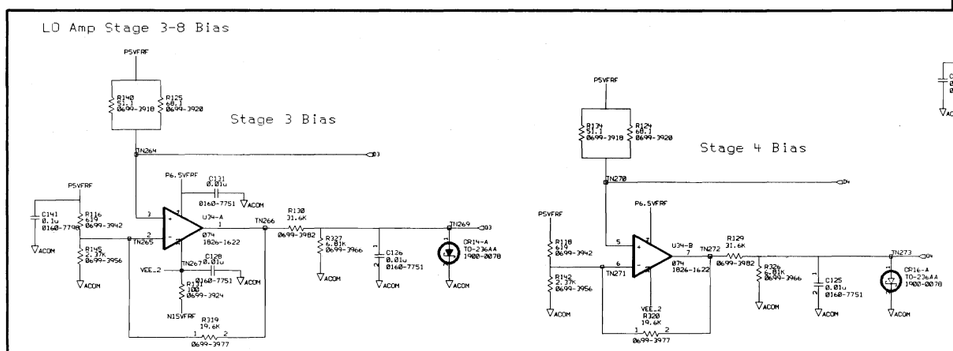

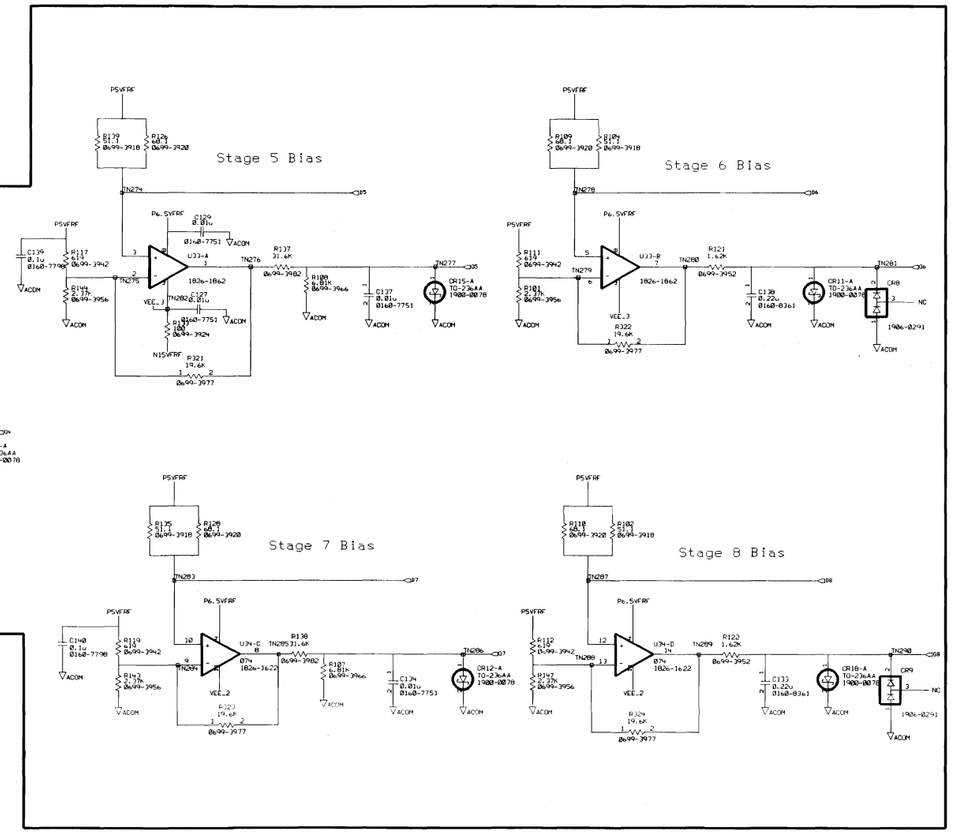

HP RESTRICTED
THIS DOCUMENT CONTAINS CONFIDENTIAL, PROPRIETARY INFORMATION THAT IS HEWLETT-PACKARD (HP) PROPERTY. DO NOT DISCLOSE TO OR DUPLICATE FOR OTHERS EXCEPT AS AUTHORIZED BY HP.

LAST CHECKED	DATE	SCHEMATIC, PWA Built In Tracking Generator LO Amplifier Bias	HEWLETT PACKARD MID
ENGINEER	SHEET 1 OF 1	TITLE	
DRAWN BY	SIZE D		E4403-60004
	AB3850	B3950 5 7	D-E4403-60004-1

REVISIONS
SEE PAGE 1 FOR REVISION HISTORY

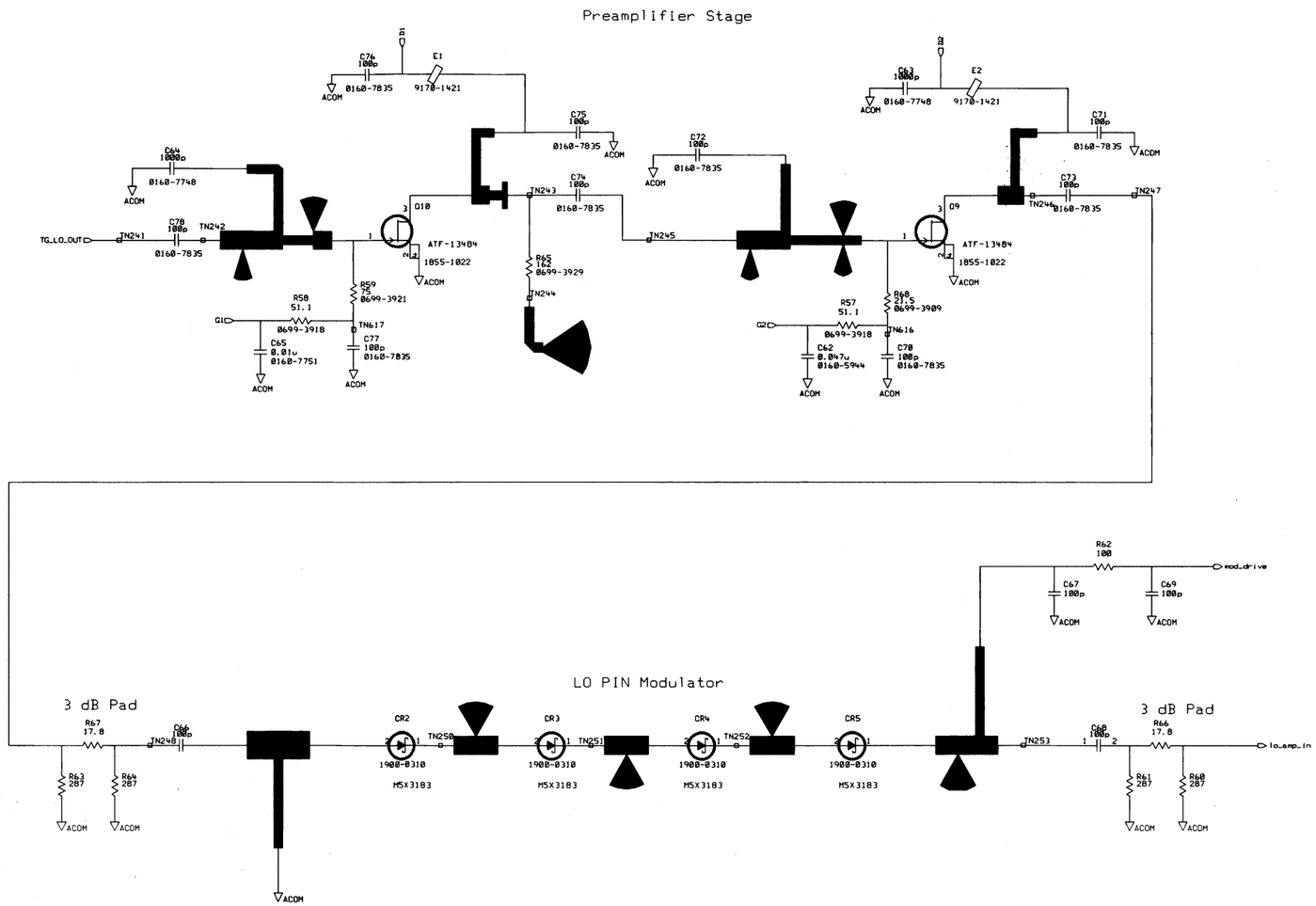

HP RESTRICTED
THIS DOCUMENT CONTAINS CONFIDENTIAL, PROPRIETARY INFORMATION THAT IS HEWLETT-PACKARD (HP) PROPERTY. DO NOT DISCLOSE TO OR DUPLICATE FOR OTHERS EXCEPT AS AUTHORIZED BY HP.

LAST CHECKED	DATE	SCHEMATIC, PWA Built In Tracking Generator Preamp_mod	HEWLETT PACKARD MID
ENGINEER	SHEET 1 OF 1	TITLE	
DRAWN BY	SIZE C	SHP_MOSO2_BITO/AB3850/top_level/ extracted_obj/HP_MOSO2_BITO/current/preamp_mod	E4403-60004
	AB3850 ASSY. REV	B3850 BRD. REV / PAGE 6 OF 7	C-E4403-60004-1 DWG. NO.

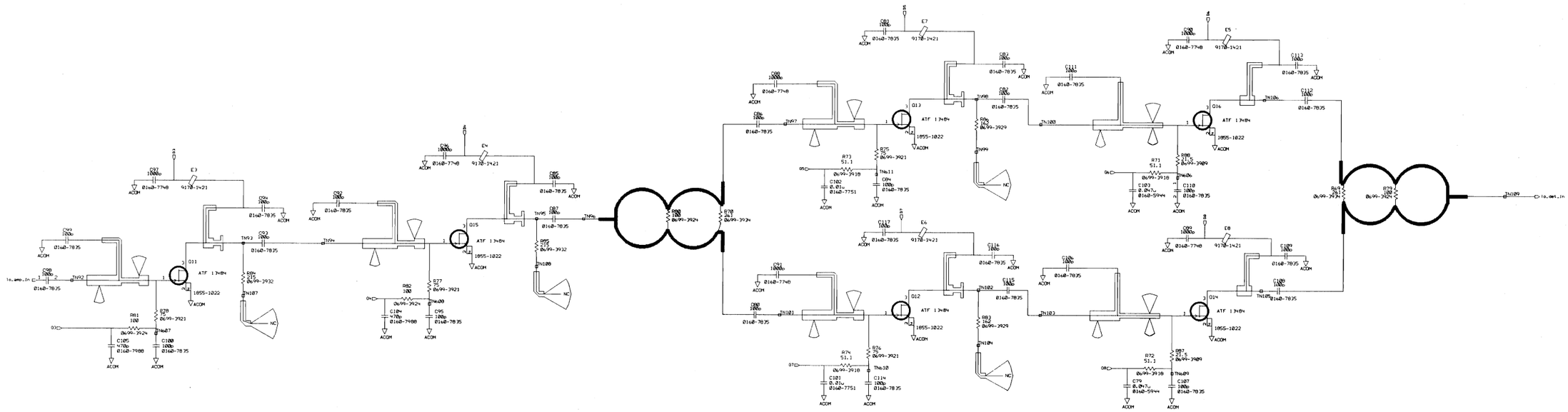

HP RESTRICTED
THIS DOCUMENT CONTAINS CONFIDENTIAL, PROPRIETARY INFORMATION THAT IS HEWLETT-PACKARD (HP) PROPERTY. DO NOT DISCLOSE TO OR DUPLICATE FOR OTHERS EXCEPT AS AUTHORIZED BY HP.

LAST CHECKED	DATE	SCHEMATIC, PWA Built In Tracking Generator LO Amplifier	HEWLETT PACKARD
ENGINEER	SHEET 1 OF 1	TITLE	MID
DRAWN BY	SIZE D	HP_MOS02.BITG/AB3850/schematic/	E4403-60004
AB3850	B3850	7 7	D-E4403-60004-1
ASSY. REV.	REV.	PAGE OF	DWG. REV.

Component-Level Information Packet for E4401-60004

1.5 GHz Tracking Generator RF (50 Ohm)

Agilent Technologies

Agilent Part Number: E4401-90031
Printed in Malaysia April 2001

Notice

The information contained in this document is subject to change without notice. Agilent Technologies makes no warranty of any kind with regard to this material, including but not limited to, the implied warranties of merchantability and fitness for a particular purpose. Agilent Technologies shall not be liable for errors contained herein or for incidental or consequential damages in connection with the furnishing, performance, or use of this material.

© Copyright Agilent Technologies Inc. 2000, 2001
All Rights Reserved. Reproduction, adaptation, or translation without prior written permission is prohibited, except as allowed under the copyright laws.

Agilent Part Number E4401-60004
1.5 GHz Tracking Generator RF (50 Ohm)

Reference Designator	Agilent Part Number	Qty	Description	Mgr Code	Mfr Part Number
C1	0160-7835	1	CAP-FXD 100pF +-5% 50 V CER C0G	02010	06035A101JAT
C2	0160-7835	1	CAP-FXD 100pF +-5% 50 V CER C0G	02010	06035A101JAT
C3	0160-7834	1	CAP-FXD 10pF +-5% 50 V CER C0G	02010	06035A100JAT
C4	0160-7845	1	CAP-FXD 180pF +-5% 50 V CER C0G	02010	06035A181JAT
C5	0160-7845	1	CAP-FXD 180pF +-5% 50 V CER C0G	02010	06035A181JAT
C6	0160-7751	1	CAP-FXD 0.01uF +-10% 50 V CER X7R	02010	06035C103KAT
C7	0160-7869	1	CAP-FXD 680pF +-10% 50 V CER X7R	02010	06035C681KAT
C8	0160-7842	1	CAP-FXD 150pF +-5% 50 V CER C0G	02010	06035A151JAT
C9	0160-7835	1	CAP-FXD 100pF +-5% 50 V CER C0G	02010	06035A101JAT
C10	0160-7835	1	CAP-FXD 100pF +-5% 50 V CER C0G	02010	06035A101JAT
C11	0160-7835	1	CAP-FXD 100pF +-5% 50 V CER C0G	02010	06035A101JAT
C12	0160-7835	1	CAP-FXD 100pF +-5% 50 V CER C0G	02010	06035A101JAT
C13	0180-3751	1	CAP-FXD 1uF +-20% 35 V TA	02010	TAJB105M035
C14	0160-7798	1	CAP-FXD 0.1uF +-10% 50 V CER X7R	06352	C2012X7R1H104K
C15	0160-7835	1	CAP-FXD 100pF +-5% 50 V CER C0G	02010	06035A101JAT
C16	0160-7835	1	CAP-FXD 100pF +-5% 50 V CER C0G	02010	06035A101JAT
C17	0160-7835	1	CAP-FXD 100pF +-5% 50 V CER C0G	02010	06035A101JAT
C18	0160-7835	1	CAP-FXD 100pF +-5% 50 V CER C0G	02010	06035A101JAT
C19	0160-7835	1	CAP-FXD 100pF +-5% 50 V CER C0G	02010	06035A101JAT
C20	0160-7835	1	CAP-FXD 100pF +-5% 50 V CER C0G	02010	06035A101JAT
C21	0160-7835	1	CAP-FXD 100pF +-5% 50 V CER C0G	02010	06035A101JAT
C22	0160-6407	1	CAP-FXD 1uF +-5% 25 V CER X7R	02010	22253C105JAT A
C23	0160-6407	1	CAP-FXD 1uF +-5% 25 V CER X7R	02010	22253C105JAT A
C24	0180-3751	1	CAP-FXD 1uF +-20% 35 V TA	02010	TAJB105M035
C25	0160-7835	1	CAP-FXD 100pF +-5% 50 V CER C0G	02010	06035A101JAT
C26	0160-7841	1	CAP-FXD 15pF +-5% 50 V CER C0G	02010	06035A150JAT
C27	0160-6222	1	CAP-FXD 0.1uF +-10% 50 V CER X7R	02010	12105C104KAT A
C28	0180-3751	1	CAP-FXD 1uF +-20% 35 V TA	02010	TAJB105M035

Agilent Part Number E4401-60004
1.5 GHz Tracking Generator RF (50 Ohm)

Reference Designator	Agilent Part Number	Qty	Description	Mgr Code	Mfr Part Number
C29	0160-7835	1	CAP-FXD 100pF +-5% 50 V CER C0G	02010	06035A101JAT
C30	0160-7798	1	CAP-FXD 0.1uF +-10% 50 V CER X7R	06352	C2012X7R1H104K
C31	0160-6407	1	CAP-FXD 1uF +-5% 25 V CER X7R	02010	22253C105JAT A
C32	0160-7869	1	CAP-FXD 680pF +-10% 50 V CER X7R	02010	06035C681KAT
C33	0160-7869	1	CAP-FXD 680pF +-10% 50 V CER X7R	02010	06035C681KAT
C34	0160-7798	1	CAP-FXD 0.1uF +-10% 50 V CER X7R	06352	C2012X7R1H104K
C35	0160-7798	1	CAP-FXD 0.1uF +-10% 50 V CER X7R	06352	C2012X7R1H104K
C36	0160-7835	1	CAP-FXD 100pF +-5% 50 V CER C0G	02010	06035A101JAT
C37	0160-7835	1	CAP-FXD 100pF +-5% 50 V CER C0G	02010	06035A101JAT
C38	0160-7835	1	CAP-FXD 100pF +-5% 50 V CER C0G	02010	06035A101JAT
C39	0160-7835	1	CAP-FXD 100pF +-5% 50 V CER C0G	02010	06035A101JAT
C40	0160-7798	1	CAP-FXD 0.1uF +-10% 50 V CER X7R	06352	C2012X7R1H104K
C41	0160-7798	1	CAP-FXD 0.1uF +-10% 50 V CER X7R	06352	C2012X7R1H104K
C42	0160-7835	1	CAP-FXD 100pF +-5% 50 V CER C0G	02010	06035A101JAT
C43	0160-7835	1	CAP-FXD 100pF +-5% 50 V CER C0G	02010	06035A101JAT
C44	0160-7835	1	CAP-FXD 100pF +-5% 50 V CER C0G	02010	06035A101JAT
C45	0160-7835	1	CAP-FXD 100pF +-5% 50 V CER C0G	02010	06035A101JAT
C46	0160-7835	1	CAP-FXD 100pF +-5% 50 V CER C0G	02010	06035A101JAT
C47	0160-7835	1	CAP-FXD 100pF +-5% 50 V CER C0G	02010	06035A101JAT
C48	0160-7835	1	CAP-FXD 100pF +-5% 50 V CER C0G	02010	06035A101JAT
C49	0160-7835	1	CAP-FXD 100pF +-5% 50 V CER C0G	02010	06035A101JAT
C50	0160-7798	1	CAP-FXD 0.1uF +-10% 50 V CER X7R	06352	C2012X7R1H104K
C51	0160-7798	1	CAP-FXD 0.1uF +-10% 50 V CER X7R	06352	C2012X7R1H104K
C52	0160-7798	1	CAP-FXD 0.1uF +-10% 50 V CER X7R	06352	C2012X7R1H104K
C53	0160-7835	1	CAP-FXD 100pF +-5% 50 V CER C0G	02010	06035A101JAT
C54	0160-7798	1	CAP-FXD 0.1uF +-10% 50 V CER X7R	06352	C2012X7R1H104K
C55	0160-7835	1	CAP-FXD 100pF +-5% 50 V CER C0G	02010	06035A101JAT
C56	0160-7835	1	CAP-FXD 100pF +-5% 50 V CER C0G	02010	06035A101JAT
C58	0160-7835	1	CAP-FXD 100pF +-5% 50 V CER C0G	02010	06035A101JAT
C59	0160-7986	1	CAP-FXD 390pF +-5% 50 V CER C0G	06352	C1608COG1H391J

 **Indicates factory-selected value*

Agilent Part Number E4401-60004
1.5 GHz Tracking Generator RF (50 Ohm)

Reference Designator	Agilent Part Number	Qty	Description	Mgr Code	Mfr Part Number
C60	0160-7798	1	CAP-FXD 0.1uF +-10% 50 V CER X7R	06352	C2012X7R1H104K
C61	0160-7798	1	CAP-FXD 0.1uF +-10% 50 V CER X7R	06352	C2012X7R1H104K
C62	0160-7798	1	CAP-FXD 0.1uF +-10% 50 V CER X7R	06352	C2012X7R1H104K
C63	0160-7751	1	CAP-FXD 0.01uF +-10% 50 V CER X7R	02010	06035C103KAT
C64	0160-7751	1	CAP-FXD 0.01uF +-10% 50 V CER X7R	02010	06035C103KAT
C65	0160-7748	1	CAP-FXD 1000pF +-10% 50 V CER X7R	02010	06035C102KAT
C66	0160-7835	1	CAP-FXD 100pF +-5% 50 V CER C0G	02010	06035A101JAT
C67	0160-7835	1	CAP-FXD 100pF +-5% 50 V CER C0G	02010	06035A101JAT
C68	0160-7835	1	CAP-FXD 100pF +-5% 50 V CER C0G	02010	06035A101JAT
C69	0160-7798	1	CAP-FXD 0.1uF +-10% 50 V CER X7R	06352	C2012X7R1H104K
C70	0160-7751	1	CAP-FXD 0.01uF +-10% 50 V CER X7R	02010	06035C103KAT
C71	0160-7835	1	CAP-FXD 100pF +-5% 50 V CER C0G	02010	06035A101JAT
C72	0160-7835	1	CAP-FXD 100pF +-5% 50 V CER C0G	02010	06035A101JAT
C73	0160-7748	1	CAP-FXD 1000pF +-10% 50 V CER X7R	02010	06035C102KAT
C74	0160-7798	1	CAP-FXD 0.1uF +-10% 50 V CER X7R	06352	C2012X7R1H104K
C75	0160-7835	1	CAP-FXD 100pF +-5% 50 V CER C0G	02010	06035A101JAT
C76	0160-7751	1	CAP-FXD 0.01uF +-10% 50 V CER X7R	02010	06035C103KAT
C77	0160-7835	1	CAP-FXD 100pF +-5% 50 V CER C0G	02010	06035A101JAT
C78	0160-7835	1	CAP-FXD 100pF +-5% 50 V CER C0G	02010	06035A101JAT
C79	0160-7748	1	CAP-FXD 1000pF +-10% 50 V CER X7R	02010	06035C102KAT
C80	0160-7835	1	CAP-FXD 100pF +-5% 50 V CER C0G	02010	06035A101JAT
C81	0160-7835	1	CAP-FXD 100pF +-5% 50 V CER C0G	02010	06035A101JAT
C82	0160-7798	1	CAP-FXD 0.1uF +-10% 50 V CER X7R	06352	C2012X7R1H104K
C83	0160-7798	1	CAP-FXD 0.1uF +-10% 50 V CER X7R	06352	C2012X7R1H104K
C84	0160-7798	1	CAP-FXD 0.1uF +-10% 50 V CER X7R	06352	C2012X7R1H104K
C85	0160-7798	1	CAP-FXD 0.1uF +-10% 50 V CER X7R	06352	C2012X7R1H104K
C86	0160-7798	1	CAP-FXD 0.1uF +-10% 50 V CER X7R	06352	C2012X7R1H104K
C87	0160-7798	1	CAP-FXD 0.1uF +-10% 50 V CER X7R	06352	C2012X7R1H104K
C88	0160-7798	1	CAP-FXD 0.1uF +-10% 50 V CER X7R	06352	C2012X7R1H104K
C89	0160-7798	1	CAP-FXD 0.1uF +-10% 50 V CER X7R	06352	C2012X7R1H104K

**Indicates factory-selected value*

Agilent Part Number E4401-60004
1.5 GHz Tracking Generator RF (50 Ohm)

Reference Designator	Agilent Part Number	Qty	Description	Mgr Code	Mfr Part Number
C90	0160-7798	1	CAP-FXD 0.1uF +-10% 50 V CER X7R	06352	C2012X7R1H104K
C91	0160-7798	1	CAP-FXD 0.1uF +-10% 50 V CER X7R	06352	C2012X7R1H104K
C92	0160-7809	1	CAP-FXD 0.015uF +-10% 50 V CER X7R	12340	C0603C153K5RAC
C93	0160-7798	1	CAP-FXD 0.1uF +-10% 50 V CER X7R	06352	C2012X7R1H104K
C94	0160-7798	1	CAP-FXD 0.1uF +-10% 50 V CER X7R	06352	C2012X7R1H104K
C95	0160-7798	1	CAP-FXD 0.1uF +-10% 50 V CER X7R	06352	C2012X7R1H104K
C96	0160-7798	1	CAP-FXD 0.1uF +-10% 50 V CER X7R	06352	C2012X7R1H104K
C97	0160-7798	1	CAP-FXD 0.1uF +-10% 50 V CER X7R	06352	C2012X7R1H104K
C98	0160-7798	1	CAP-FXD 0.1uF +-10% 50 V CER X7R	06352	C2012X7R1H104K
C99	0180-4228	1	CAP-FXD 47uF +-20% 10 V TA	02010	TAJD476M010
C100	0180-4228	1	CAP-FXD 47uF +-20% 10 V TA	02010	TAJD476M010
C101	0160-5579	1	CAP-FXD 0.047uF +-5% 63 V POLYE-MET	06127	MKS-2
C102	0160-7798	1	CAP-FXD 0.1uF +-10% 50 V CER X7R	06352	C2012X7R1H104K
C103	0160-7798	1	CAP-FXD 0.1uF +-10% 50 V CER X7R	06352	C2012X7R1H104K
C104	0160-7798	1	CAP-FXD 0.1uF +-10% 50 V CER X7R	06352	C2012X7R1H104K
C105	0160-7798	1	CAP-FXD 0.1uF +-10% 50 V CER X7R	06352	C2012X7R1H104K
C106	0160-7835	1	CAP-FXD 100pF +-5% 50 V CER C0G	02010	06035A101JAT
C107	0160-7798	1	CAP-FXD 0.1uF +-10% 50 V CER X7R	06352	C2012X7R1H104K
C108	0160-7798	1	CAP-FXD 0.1uF +-10% 50 V CER X7R	06352	C2012X7R1H104K
C109	0160-7798	1	CAP-FXD 0.1uF +-10% 50 V CER X7R	06352	C2012X7R1H104K
C110	0160-7798	1	CAP-FXD 0.1uF +-10% 50 V CER X7R	06352	C2012X7R1H104K
C111	0160-7798	1	CAP-FXD 0.1uF +-10% 50 V CER X7R	06352	C2012X7R1H104K
C112	0160-7798	1	CAP-FXD 0.1uF +-10% 50 V CER X7R	06352	C2012X7R1H104K
C113	0160-7798	1	CAP-FXD 0.1uF +-10% 50 V CER X7R	06352	C2012X7R1H104K
C114	0160-7798	1	CAP-FXD 0.1uF +-10% 50 V CER X7R	06352	C2012X7R1H104K
C115	0160-7798	1	CAP-FXD 0.1uF +-10% 50 V CER X7R	06352	C2012X7R1H104K
C116	0160-7798	1	CAP-FXD 0.1uF +-10% 50 V CER X7R	06352	C2012X7R1H104K
C117	0160-7798	1	CAP-FXD 0.1uF +-10% 50 V CER X7R	06352	C2012X7R1H104K
C118	0160-7973	1	CAP-FXD 30pF +-5% 50 V CER C0G	02010	06035A300JAT
C119	0160-6444	1	CAP-FXD 0.022uF +-10% 50 V CER X7R	02010	08055C223KAT

 **Indicates factory-selected value*

Agilent Part Number E4401-60004
1.5 GHz Tracking Generator RF (50 Ohm)

Reference Designator	Agilent Part Number	Qty	Description	Mgr Code	Mfr Part Number
C120	0160-7798	1	CAP-FXD 0.1uF +-10% 50 V CER X7R	06352	C2012X7R1H104K
C121	0160-7798	1	CAP-FXD 0.1uF +-10% 50 V CER X7R	06352	C2012X7R1H104K
C122	0160-7798	1	CAP-FXD 0.1uF +-10% 50 V CER X7R	06352	C2012X7R1H104K
C123	0160-7798	1	CAP-FXD 0.1uF +-10% 50 V CER X7R	06352	C2012X7R1H104K
C124	0160-7798	1	CAP-FXD 0.1uF +-10% 50 V CER X7R	06352	C2012X7R1H104K
C125	0160-7798	1	CAP-FXD 0.1uF +-10% 50 V CER X7R	06352	C2012X7R1H104K
C127	0160-7798	1	CAP-FXD 0.1uF +-10% 50 V CER X7R	06352	C2012X7R1H104K
C128	0160-7798	1	CAP-FXD 0.1uF +-10% 50 V CER X7R	06352	C2012X7R1H104K
C129	0160-7798	1	CAP-FXD 0.1uF +-10% 50 V CER X7R	06352	C2012X7R1H104K
C130	0160-6100	1	CAP-FXD 1000pF +-5% 50 V CER C0G	02010	12065A102JAT A
C131	0160-7798	1	CAP-FXD 0.1uF +-10% 50 V CER X7R	06352	C2012X7R1H104K
C132	0160-7798	1	CAP-FXD 0.1uF +-10% 50 V CER X7R	06352	C2012X7R1H104K
C133	0160-7798	1	CAP-FXD 0.1uF +-10% 50 V CER X7R	06352	C2012X7R1H104K
C134	0160-7798	1	CAP-FXD 0.1uF +-10% 50 V CER X7R	06352	C2012X7R1H104K
C135	0160-7798	1	CAP-FXD 0.1uF +-10% 50 V CER X7R	06352	C2012X7R1H104K
C136	0160-7798	1	CAP-FXD 0.1uF +-10% 50 V CER X7R	06352	C2012X7R1H104K
C137	0160-7798	1	CAP-FXD 0.1uF +-10% 50 V CER X7R	06352	C2012X7R1H104K
C138	0160-7798	1	CAP-FXD 0.1uF +-10% 50 V CER X7R	06352	C2012X7R1H104K
C139	0160-7798	1	CAP-FXD 0.1uF +-10% 50 V CER X7R	06352	C2012X7R1H104K
C140	0160-7835	1	CAP-FXD 100pF +-5% 50 V CER C0G	02010	06035A101JAT
C141	0160-7835	1	CAP-FXD 100pF +-5% 50 V CER C0G	02010	06035A101JAT
C142	0160-7835	1	CAP-FXD 100pF +-5% 50 V CER C0G	02010	06035A101JAT
C143	0160-7860	1	CAP-FXD 4.7pF +-5.31% 50 V CER C0G	02010	06035A4R7CAT
C168	0160-7751	1	CAP-FXD 0.01uF +-10% 50 V CER X7R	02010	06035C103KAT
C391	0180-4287	1	CAP-FXD 10uF +-20% 35 V TA	02010	TAJD106M035
C392	0160-7835	1	CAP-FXD 100pF +-5% 50 V CER C0G	02010	06035A101JAT
C393	0180-3751	1	CAP-FXD 1uF +-20% 35 V TA	02010	TAJB105M035
C394	0160-7867	1	CAP-FXD 6.8pF +-3.68% 50 V CER C0G	02010	06035A6R8CAT
C395	0160-7867	1	CAP-FXD 6.8pF +-3.68% 50 V CER C0G	02010	06035A6R8CAT
C396	0160-8216	1	CAP-FXD 8.2pF 50 V MOS	02010	08055J8R2CAW

Agilent Part Number E4401-60004
1.5 GHz Tracking Generator RF (50 Ohm)

Reference Designator	Agilent Part Number	Qty	Description	Mgr Code	Mfr Part Number
C397	0160-7712	1	CAP-FXD 1500pF +-10% 50 V CER X7R	02010	06035C152KATRA
C398	0160-7835	1	CAP-FXD 100pF +-5% 50 V CER C0G	02010	06035A101JAT
C399	0160-7986	1	CAP-FXD 390pF +-5% 50 V CER C0G	06352	C1608COG1H391J
C400	0160-7986	1	CAP-FXD 390pF +-5% 50 V CER C0G	06352	C1608COG1H391J
C401	0160-7712	1	CAP-FXD 1500pF +-10% 50 V CER X7R	02010	06035C152KATRA
C402	0160-7835	1	CAP-FXD 100pF +-5% 50 V CER C0G	02010	06035A101JAT
C403	0160-7835	1	CAP-FXD 100pF +-5% 50 V CER C0G	02010	06035A101JAT
C404	0160-7835	1	CAP-FXD 100pF +-5% 50 V CER C0G	02010	06035A101JAT
C405	0160-7986	1	CAP-FXD 390pF +-5% 50 V CER C0G	06352	C1608COG1H391J
C406	0160-7986	1	CAP-FXD 390pF +-5% 50 V CER C0G	06352	C1608COG1H391J
C407	0180-4287	1	CAP-FXD 10uF +-20% 35 V TA	02010	TAJD106M035
C408	0160-7835	1	CAP-FXD 100pF +-5% 50 V CER C0G	02010	06035A101JAT
C409	0180-4287	1	CAP-FXD 10uF +-20% 35 V TA	02010	TAJD106M035
C410	0160-7986	1	CAP-FXD 390pF +-5% 50 V CER C0G	06352	C1608COG1H391J
C411	0160-7986	1	CAP-FXD 390pF +-5% 50 V CER C0G	06352	C1608COG1H391J
C412	0160-7986	1	CAP-FXD 390pF +-5% 50 V CER C0G	06352	C1608COG1H391J
C413	0160-7798	1	CAP-FXD 0.1uF +-10% 50 V CER X7R	06352	C2012X7R1H104K
C414	0160-7798	1	CAP-FXD 0.1uF +-10% 50 V CER X7R	06352	C2012X7R1H104K
C415	0160-7986	1	CAP-FXD 390pF +-5% 50 V CER C0G	06352	C1608COG1H391J
C416	0160-7986	1	CAP-FXD 390pF +-5% 50 V CER C0G	06352	C1608COG1H391J
C417	0160-7986	1	CAP-FXD 390pF +-5% 50 V CER C0G	06352	C1608COG1H391J
C418	0160-7986	1	CAP-FXD 390pF +-5% 50 V CER C0G	06352	C1608COG1H391J
C419	0160-7835	1	CAP-FXD 100pF +-5% 50 V CER C0G	02010	06035A101JAT
C420	0160-7751	1	CAP-FXD 0.01uF +-10% 50 V CER X7R	02010	06035C103KAT
C421	0160-7835	1	CAP-FXD 100pF +-5% 50 V CER C0G	02010	06035A101JAT
C422	0160-6104	1	CAP-FXD 2200pF +-5% 50 V CER C0G	02010	12065A222JATRA
C423	0160-7751	1	CAP-FXD 0.01uF +-10% 50 V CER X7R	02010	06035C103KAT
C424	0160-6104	1	CAP-FXD 2200pF +-5% 50 V CER C0G	02010	12065A222JATRA
C425	0160-7861	1	CAP-FXD 47pF +-5% 50 V CER C0G	02010	06035A470JAT
C426	0160-7798	1	CAP-FXD 0.1uF +-10% 50 V CER X7R	06352	C2012X7R1H104K

 **Indicates factory-selected value*

Agilent Part Number E4401-60004
1.5 GHz Tracking Generator RF (50 Ohm)

Reference Designator	Agilent Part Number	Qty	Description	Mgr Code	Mfr Part Number
C427	0160-7798	1	CAP-FXD 0.1uF +-10% 50 V CER X7R	06352	C2012X7R1H104K
C428	0160-7861	1	CAP-FXD 47pF +-5% 50 V CER C0G	02010	06035A470JAT
C429	0160-7798	1	CAP-FXD 0.1uF +-10% 50 V CER X7R	06352	C2012X7R1H104K
C430	0160-7798	1	CAP-FXD 0.1uF +-10% 50 V CER X7R	06352	C2012X7R1H104K
C431	0160-7798	1	CAP-FXD 0.1uF +-10% 50 V CER X7R	06352	C2012X7R1H104K
C432	0160-7798	1	CAP-FXD 0.1uF +-10% 50 V CER X7R	06352	C2012X7R1H104K
C433	0160-7798	1	CAP-FXD 0.1uF +-10% 50 V CER X7R	06352	C2012X7R1H104K
C434	0160-7798	1	CAP-FXD 0.1uF +-10% 50 V CER X7R	06352	C2012X7R1H104K
C435	0160-7835	1	CAP-FXD 100pF +-5% 50 V CER C0G	02010	06035A101JAT
C436	0160-7835	1	CAP-FXD 100pF +-5% 50 V CER C0G	02010	06035A101JAT
C437	0160-7986	1	CAP-FXD 390pF +-5% 50 V CER C0G	06352	C1608COG1H391J
C438	0160-7798	1	CAP-FXD 0.1uF +-10% 50 V CER X7R	06352	C2012X7R1H104K
C439	0160-7835	1	CAP-FXD 100pF +-5% 50 V CER C0G	02010	06035A101JAT
C440	0160-7751	1	CAP-FXD 0.01uF +-10% 50 V CER X7R	02010	06035C103KAT
C441	0160-7798	1	CAP-FXD 0.1uF +-10% 50 V CER X7R	06352	C2012X7R1H104K
C442	0160-7835	1	CAP-FXD 100pF +-5% 50 V CER C0G	02010	06035A101JAT
C443	0160-7835	1	CAP-FXD 100pF +-5% 50 V CER C0G	02010	06035A101JAT
C444	0160-7798	1	CAP-FXD 0.1uF +-10% 50 V CER X7R	06352	C2012X7R1H104K
C445	0160-7835	1	CAP-FXD 100pF +-5% 50 V CER C0G	02010	06035A101JAT
C446	0160-7835	1	CAP-FXD 100pF +-5% 50 V CER C0G	02010	06035A101JAT
C447	0160-7751	1	CAP-FXD 0.01uF +-10% 50 V CER X7R	02010	06035C103KAT
C449	0160-7798	1	CAP-FXD 0.1uF +-10% 50 V CER X7R	06352	C2012X7R1H104K
C450	0160-7835	1	CAP-FXD 100pF +-5% 50 V CER C0G	02010	06035A101JAT
C451	0160-7835	1	CAP-FXD 100pF +-5% 50 V CER C0G	02010	06035A101JAT
C452	0160-7855	1	CAP-FXD 33pF +-5% 50 V CER C0G	02010	06035A330JAT
C453	0160-7798	1	CAP-FXD 0.1uF +-10% 50 V CER X7R	06352	C2012X7R1H104K
C454	0160-7986	1	CAP-FXD 390pF +-5% 50 V CER C0G	06352	C1608COG1H391J
C455	0180-4287	1	CAP-FXD 10uF +-20% 35 V TA	02010	TAJD106M035
C456	0160-7798	1	CAP-FXD 0.1uF +-10% 50 V CER X7R	06352	C2012X7R1H104K
C457	0180-4287	1	CAP-FXD 10uF +-20% 35 V TA	02010	TAJD106M035

Agilent Part Number E4401-60004
1.5 GHz Tracking Generator RF (50 Ohm)

Reference Designator	Agilent Part Number	Qty	Description	Mgr Code	Mfr Part Number
C458	0160-7798	1	CAP-FXD 0.1uF +-10% 50 V CER X7R	06352	C2012X7R1H104K
C459	0180-4287	1	CAP-FXD 10uF +-20% 35 V TA	02010	TAJD106M035
C460	0160-7751	1	CAP-FXD 0.01uF +-10% 50 V CER X7R	02010	06035C103KAT
C461	0180-4287	1	CAP-FXD 10uF +-20% 35 V TA	02010	TAJD106M035
C462	0160-7798	1	CAP-FXD 0.1uF +-10% 50 V CER X7R	06352	C2012X7R1H104K
C463	0160-7781	1	CAP-FXD 2200pF +-10% 50 V CER X7R	02010	06035C222KAT
C464	0160-7798	1	CAP-FXD 0.1uF +-10% 50 V CER X7R	06352	C2012X7R1H104K
C465	0160-7798	1	CAP-FXD 0.1uF +-10% 50 V CER X7R	06352	C2012X7R1H104K
C473	0160-7751	1	CAP-FXD 0.01uF +-10% 50 V CER X7R	02010	06035C103KAT
C474	0160-7835	1	CAP-FXD 100pF +-5% 50 V CER C0G	02010	06035A101JAT
C475	0160-7835	1	CAP-FXD 100pF +-5% 50 V CER C0G	02010	06035A101JAT
C476	0160-7835	1	CAP-FXD 100pF +-5% 50 V CER C0G	02010	06035A101JAT
C477	0160-7835	1	CAP-FXD 100pF +-5% 50 V CER C0G	02010	06035A101JAT
C493	0160-7873	1	CAP-FXD 820pF +-10% 50 V CER X7R	02010	06035C821KAT
C494	0160-7873	1	CAP-FXD 820pF +-10% 50 V CER X7R	02010	06035C821KAT
C495	0160-7842	1	CAP-FXD 150pF +-5% 50 V CER C0G	02010	06035A151JAT
CR1	1901-1504	1	DIODE-SCHOTTKY 2V T0-236AB (SOT-23)	37793	HSMS-2850-TR1
CR2	1901-1505	1	DIODE-PIN T0-236AB (SOT-23)	01542	HSMP-4890
CR3	1901-1505	1	DIODE-PIN T0-236AB (SOT-23)	01542	HSMP-4890
CR4	1901-1505	1	DIODE-PIN T0-236AB (SOT-23)	01542	HSMP-4890
CR5	1901-1505	1	DIODE-PIN T0-236AB (SOT-23)	01542	HSMP-4890
CR6	1901-1505	1	DIODE-PIN T0-236AB (SOT-23)	01542	HSMP-4890
CR7	1901-1505	1	DIODE-PIN T0-236AB (SOT-23)	01542	HSMP-4890
CR8	1901-1505	1	DIODE-PIN T0-236AB (SOT-23)	01542	HSMP-4890
CR9	1901-1505	1	DIODE-PIN T0-236AB (SOT-23)	01542	HSMP-4890
CR10	1901-1504	1	DIODE-SCHOTTKY 2V T0-236AB (SOT-23)	37793	HSMS-2850-TR1
CR11	1900-0264	1	DIODE-SCHOTTKY SM SIG	20057	HSMS-2822
CR12	1901-1504	1	DIODE-SCHOTTKY 2V T0-236AB (SOT-23)	37793	HSMS-2850-TR1
CR13	1900-0298	1	DIODE-PIN	01542	HSMP-4820
CR14	1901-1489	1	DIODE-V-SUPPR 10.5V D0-214AA	02688	SMBJ6.0A

 **Indicates factory-selected value*

Agilent Part Number E4401-60004
1.5 GHz Tracking Generator RF (50 Ohm)

Reference Designator	Agilent Part Number	Qty	Description	Mgr Code	Mfr Part Number
CR15	1901-1489	1	DIODE-V-SUPPR 10.5V D0-214AA	02688	SMBJ6.0A
CR16	1900-0298	1	DIODE-PIN	01542	HSMP-4820
CR18	1902-1542	1	DIODE-ZNR 6.2V 5% TO-236 (SOT-23)	02910	BZX84C6V2
CR19	1901-1227	1	DIODE-SWITCHING 75V 200MA 6NS TO-236	02910	BAS16
CR60	0122-0189	1	DIODE-VVC 2.1PF 14% C 1/C28-MIN7.5	28480	0122-0189
CR61	0122-0189	1	DIODE-VVC 2.1PF 14% C 1/C28-MIN7.5	28480	0122-0189
CR62	1901-1227	1	DIODE-SWITCHING 75V 200MA 6NS TO-236	02910	BAS16
CR63	1900-0309	1	DIODE-SCHOTTKY SM SIG	01542	HSMS-2827
CR64	1901-1227	1	DIODE-SWITCHING 75V 200MA 6NS TO-236	02910	BAS16
DS1	1990-1267	1	LED-LAMP LUM-INT8MCD IF30MA-MAX	14139	AM23ID-F
DS2	1990-1267	1	LED-LAMP LUM-INT8MCD IF30MA-MAX	14139	AM23ID-F
FL1	9135-0461	1	FILTER-SUPPRESSION EMI; SMT; WORKING	09939	NFM61R10T102M00-621
FL2	9135-0461	1	FILTER-SUPPRESSION EMI; SMT; WORKING	09939	NFM61R10T102M00-621
FL3	9135-0461	1	FILTER-SUPPRESSION EMI; SMT; WORKING	09939	NFM61R10T102M00-621
FL4	9135-0461	1	FILTER-SUPPRESSION EMI; SMT; WORKING	09939	NFM61R10T102M00-621
FL5	9135-0461	1	FILTER-SUPPRESSION EMI; SMT; WORKING	09939	NFM61R10T102M00-621
FL6	9135-0461	1	FILTER-SUPPRESSION EMI; SMT; WORKING	09939	NFM61R10T102M00-621
FL7	9135-0461	1	FILTER-SUPPRESSION EMI; SMT; WORKING	09939	NFM61R10T102M00-621
FL8	9135-0461	1	FILTER-SUPPRESSION EMI; SMT; WORKING	09939	NFM61R10T102M00-621
FL9	9135-0461	1	FILTER-SUPPRESSION EMI; SMT; WORKING	09939	NFM61R10T102M00-621
FL10	9135-0461	1	FILTER-SUPPRESSION EMI; SMT; WORKING	09939	NFM61R10T102M00-621
FL11	9135-0461	1	FILTER-SUPPRESSION EMI; SMT; WORKING	09939	NFM61R10T102M00-621
FL12	9135-0461	1	FILTER-SUPPRESSION EMI; SMT; WORKING	09939	NFM61R10T102M00-621

Agilent Part Number E4401-60004
1.5 GHz Tracking Generator RF (50 Ohm)

Reference Designator	Agilent Part Number	Qty	Description	Mgr Code	Mfr Part Number
FL28	9135-0461	1	FILTER-SUPPRESSION EMI; SMT; WORKING	09939	NFM61R10T102M00-621
FL29	9135-0461	1	FILTER-SUPPRESSION EMI; SMT; WORKING	09939	NFM61R10T102M00-621
J1	1252-7168	1	CONN-POST TYPE 1-PIN-SPCG-MTG-END	03418	52089-3010
J2	1250-2471	1	CONNECTOR-RF MCX,SM-SNP-ON FEMALE	01380	829558-3
J3	1250-0257	1	CONNECTOR-RF SMB MALE PC-W-STDFS 50-OHM	01380	413990-3
J4	1252-0501	1	CONN-POST TYPE .100-PIN-SPCG-MTG-END	01380	103361-2
L1	9140-1206	1	INDUCTOR 100nH +-5% 2.8W-mmX3.4LG-mm	06352	NL322522T-R10J
L4	9140-1537	1	INDUCTOR 22nH +-10% 2.8W-mmX3.4LG-mm	06352	NL322522T-022K
L5	9140-1537	1	INDUCTOR 22nH +-10% 2.8W-mmX3.4LG-mm	06352	NL322522T-022K
L56	9140-1206	1	INDUCTOR 100nH +-5% 2.8W-mmX3.4LG-mm	06352	NL322522T-R10J
L57	9140-1206	1	INDUCTOR 100nH +-5% 2.8W-mmX3.4LG-mm	06352	NL322522T-R10J
L58	9140-1206	1	INDUCTOR 100nH +-5% 2.8W-mmX3.4LG-mm	06352	NL322522T-R10J
L59	9140-1206	1	INDUCTOR 100nH +-5% 2.8W-mmX3.4LG-mm	06352	NL322522T-R10J
L60	9135-0069	1	INDUCTOR 30nH +-5% 2.6D-mmX6.6LG-mm Q60	03273	10M030X-1
L61	9140-1206	1	INDUCTOR 100nH +-5% 2.8W-mmX3.4LG-mm	06352	NL322522T-R10J
L62	9140-1206	1	INDUCTOR 100nH +-5% 2.8W-mmX3.4LG-mm	06352	NL322522T-R10J
L63	9140-1206	1	INDUCTOR 100nH +-5% 2.8W-mmX3.4LG-mm	06352	NL322522T-R10J
L64	9140-1238	1	INDUCTOR 10uH +-5% 2.8W-mmX3.4LG-mm Q30	06352	NL322522T-100J
L65	9140-1418	1	INDUCTOR 2.7uH +-5% 3.4W-mmX4.8LG-mm	28480	9140-1418
L66	9140-1238	1	INDUCTOR 10uH +-5% 2.8W-mmX3.4LG-mm Q30	06352	NL322522T-100J
L67	9140-1194	1	INDUCTOR 10nH +-10% 2.8W-mmX3.4LG-mm	09891	KL32TE010K
L68	9140-1194	1	INDUCTOR 10nH +-10% 2.8W-mmX3.4LG-mm	09891	KL32TE010K
Q1	1854-1251	1	TRANSISTOR-DUAL NPN	03285	SSM-2210S
Q2	1853-0567	1	TRANSISTOR PNP SI SOT-23 (TO-236AB)	00746	SST3906T116
Q3	1855-0935	1	TRANSISTOR GAAS FET N-CHAN D-MODE	28480	1855-0935
Q4	1853-0567	1	TRANSISTOR PNP SI SOT-23 (TO-236AB)	00746	SST3906T116
Q5	1855-0935	1	TRANSISTOR GAAS FET N-CHAN D-MODE	28480	1855-0935
Q6	1853-0567	1	TRANSISTOR PNP SI SOT-23 (TO-236AB)	00746	SST3906T116

 **Indicates factory-selected value*

Agilent Part Number E4401-60004
1.5 GHz Tracking Generator RF (50 Ohm)

Reference Designator	Agilent Part Number	Qty	Description	Mgr Code	Mfr Part Number
Q7	1855-0935	1	TRANSISTOR GAAS FET N-CHAN D-MODE	28480	1855-0935
Q8	1854-1251	1	TRANSISTOR-DUAL NPN	03285	SSM-2210S
Q9	1855-0799	1	TRANSISTOR J-FET N-CHAN D-MODE SOT-23	36633	MMBF4416LT1
Q10	1855-0799	1	TRANSISTOR J-FET N-CHAN D-MODE SOT-23	36633	MMBF4416LT1
Q11	1855-0799	1	TRANSISTOR J-FET N-CHAN D-MODE SOT-23	36633	MMBF4416LT1
Q12	1855-0799	1	TRANSISTOR J-FET N-CHAN D-MODE SOT-23	36633	MMBF4416LT1
Q13	1855-0799	1	TRANSISTOR J-FET N-CHAN D-MODE SOT-23	36633	MMBF4416LT1
Q14	1853-0720	1	TRANSISTOR-DUAL PNP PD500MW	03285	SSM-2220S
Q15	1855-0799	1	TRANSISTOR J-FET N-CHAN D-MODE SOT-23	36633	MMBF4416LT1
Q16	1855-0799	1	TRANSISTOR J-FET N-CHAN D-MODE SOT-23	36633	MMBF4416LT1
Q17	1855-0799	1	TRANSISTOR J-FET N-CHAN D-MODE SOT-23	36633	MMBF4416LT1
Q18	1855-0799	1	TRANSISTOR J-FET N-CHAN D-MODE SOT-23	36633	MMBF4416LT1
Q19	1853-0567	1	TRANSISTOR PNP SI SOT-23 (TO-236AB)	00746	SST3906T116
Q20	1854-1037	1	TRANSISTOR NPN SI TO-236AA PD350MW	00746	SST3904T116
Q21	1853-0720	1	TRANSISTOR-DUAL PNP PD500MW	03285	SSM-2220S
Q27	1854-1270	1	TRANSISTOR NPN SI TO-261AA (SOT-223)	02910	PZT2222A
Q28	1854-1037	1	TRANSISTOR NPN SI TO-236AA PD350MW	00746	SST3904T116
Q44	1854-1037	1	TRANSISTOR NPN SI TO-236AA PD350MW	00746	SST3904T116
Q65	1853-0567	1	TRANSISTOR PNP SI SOT-23 (TO-236AB)	00746	SST3906T116
Q66	1853-0567	1	TRANSISTOR PNP SI SOT-23 (TO-236AB)	00746	SST3906T116
Q67	1854-1270	1	TRANSISTOR NPN SI TO-261AA (SOT-223)	02910	PZT2222A
Q68	1853-0568	1	TRANSISTOR PNP SI TO-236AA PD350MW	36633	MMBT5087LT1
Q69	1854-1298	1	TRANSISTOR NPN SI PD500MW	01542	AT-41486
Q70	1853-0580	1	TRANSISTOR PNP SI SOT-23 (TO-236AB)	00746	SST4403
Q71	1854-1037	1	TRANSISTOR NPN SI TO-236AA PD350MW	00746	SST3904T116
Q72	1854-1083	1	TRANSISTOR NPN SI SOT-23 (TO-236AB)	11699	CMPT5179
Q73	1854-1270	1	TRANSISTOR NPN SI TO-261AA (SOT-223)	02910	PZT2222A
R1	0699-3970	1	RESISTOR 10K +-1% .063W TKF TC0+-200	09891	RK73H1J1002F
R2	0699-3960	1	RESISTOR 3.48K +-1% .063W TKF TC0+-200	09891	RK73H1J3481F
R3	0699-3960	1	RESISTOR 3.48K +-1% .063W TKF TC0+-200	09891	RK73H1J3481F

**Indicates factory-selected value*

Agilent Part Number E4401-60004
1.5 GHz Tracking Generator RF (50 Ohm)

Reference Designator	Agilent Part Number	Qty	Description	Mgr Code	Mfr Part Number
R4	0699-3960	1	RESISTOR 3.48K +-1% .063W TKF TC0+-200	09891	RK73H1J3481F
R5	0699-3932	1	RESISTOR 215 +-1% .063W TKF TC0+-200	00746	MCR03-F-2150
R6	0699-3932	1	RESISTOR 215 +-1% .063W TKF TC0+-200	00746	MCR03-F-2150
R7	0699-3932	1	RESISTOR 215 +-1% .063W TKF TC0+-200	00746	MCR03-F-2150
R8	0699-2829	1	RESISTOR 50 +-0.1% .125W TF TC0+-25	02499	W1206R030500BT
R9	0699-2829	1	RESISTOR 50 +-0.1% .125W TF TC0+-25	02499	W1206R030500BT
R10	0699-3947	1	RESISTOR 1K +-1% .063W TKF TC0+-200	00746	MCR03-F-1001
R11	0699-3918	1	RESISTOR 51.1 +-1% .063W TKF TC0+-200	00746	MCR03-F-51R1
R12	0699-3918	1	RESISTOR 51.1 +-1% .063W TKF TC0+-200	00746	MCR03-F-51R1
R13	0699-1360	1	RESISTOR 46.4 +-1% .125W TKF TC0+-100	05524	CRCW120646R4F
R14	0699-1360	1	RESISTOR 46.4 +-1% .125W TKF TC0+-100	05524	CRCW120646R4F
R15	0699-1360	1	RESISTOR 46.4 +-1% .125W TKF TC0+-100	05524	CRCW120646R4F
R16	0699-1360	1	RESISTOR 46.4 +-1% .125W TKF TC0+-100	05524	CRCW120646R4F
R17	0699-3918	1	RESISTOR 51.1 +-1% .063W TKF TC0+-200	00746	MCR03-F-51R1
R18	0699-3918	1	RESISTOR 51.1 +-1% .063W TKF TC0+-200	00746	MCR03-F-51R1
R19	0699-3924	1	RESISTOR 100 +-1% .063W TKF TC0+-200	00746	MCR03-F-1000
R20	0699-3924	1	RESISTOR 100 +-1% .063W TKF TC0+-200	00746	MCR03-F-1000
R21	0699-3947	1	RESISTOR 1K +-1% .063W TKF TC0+-200	00746	MCR03-F-1001
R22	0699-3924	1	RESISTOR 100 +-1% .063W TKF TC0+-200	00746	MCR03-F-1000
R23	0699-3924	1	RESISTOR 100 +-1% .063W TKF TC0+-200	00746	MCR03-F-1000
R24	0699-3924	1	RESISTOR 100 +-1% .063W TKF TC0+-200	00746	MCR03-F-1000
R25	0699-3924	1	RESISTOR 100 +-1% .063W TKF TC0+-200	00746	MCR03-F-1000
R26	0699-3924	1	RESISTOR 100 +-1% .063W TKF TC0+-200	00746	MCR03-F-1000
R27	0699-3924	1	RESISTOR 100 +-1% .063W TKF TC0+-200	00746	MCR03-F-1000
R28	0699-3902	1	RESISTOR 11 +-1% .063W TKF TC0+-200	09891	RK73H1J11R0F
R29	0699-3939	1	RESISTOR 422 +-1% .063W TKF TC0+-200	09891	RK73H1J4220F
R30	0699-3939	1	RESISTOR 422 +-1% .063W TKF TC0+-200	09891	RK73H1J4220F
R31	0699-3918	1	RESISTOR 51.1 +-1% .063W TKF TC0+-200	00746	MCR03-F-51R1
R32	0699-3932	1	RESISTOR 215 +-1% .063W TKF TC0+-200	00746	MCR03-F-2150
R33	0699-3932	1	RESISTOR 215 +-1% .063W TKF TC0+-200	00746	MCR03-F-2150

 **Indicates factory-selected value*

Agilent Part Number E4401-60004
1.5 GHz Tracking Generator RF (50 Ohm)

Reference Designator	Agilent Part Number	Qty	Description	Mgr Code	Mfr Part Number
R34	0699-1360	1	RESISTOR 46.4 +-1% .125W TKF TC0+-100	05524	CRCW120646R4F
R35	0699-1360	1	RESISTOR 46.4 +-1% .125W TKF TC0+-100	05524	CRCW120646R4F
R36	0699-1360	1	RESISTOR 46.4 +-1% .125W TKF TC0+-100	05524	CRCW120646R4F
R37	0699-1360	1	RESISTOR 46.4 +-1% .125W TKF TC0+-100	05524	CRCW120646R4F
R38	0699-1351	1	RESISTOR 19.6 +-1% .125W TKF TC0+-100	05524	CRCW120619R6F
R39	0699-1351	1	RESISTOR 19.6 +-1% .125W TKF TC0+-100	05524	CRCW120619R6F
R40	0699-1351	1	RESISTOR 19.6 +-1% .125W TKF TC0+-100	05524	CRCW120619R6F
R41	0699-1351	1	RESISTOR 19.6 +-1% .125W TKF TC0+-100	05524	CRCW120619R6F
R42	0699-3947	1	RESISTOR 1K +-1% .063W TKF TC0+-200	00746	MCR03-F-1001
R43	0699-3909	1	RESISTOR 21.5 +-1% .063W TKF TC0+-200	09891	RK73H1J21R5F
R44	0699-3908	1	RESISTOR 19.6 +-1% .063W TKF TC0+-200	09891	RK73H1J19R6F
R45	0699-3924	1	RESISTOR 100 +-1% .063W TKF TC0+-200	00746	MCR03-F-1000
R46	0699-3933	1	RESISTOR 237 +-1% .063W TKF TC0+-200	00746	MCR03-F-2370
R47	0699-3924	1	RESISTOR 100 +-1% .063W TKF TC0+-200	00746	MCR03-F-1000
R48	0699-3924	1	RESISTOR 100 +-1% .063W TKF TC0+-200	00746	MCR03-F-1000
R49	0699-3924	1	RESISTOR 100 +-1% .063W TKF TC0+-200	00746	MCR03-F-1000
R50	0699-3993	1	RESISTOR 100K +-1% .063W TKF TC0+-200	09891	RK73H1J1003F
R51	0699-3924	1	RESISTOR 100 +-1% .063W TKF TC0+-200	00746	MCR03-F-1000
R52	0699-3924	1	RESISTOR 100 +-1% .063W TKF TC0+-200	00746	MCR03-F-1000
R53	0699-3993	1	RESISTOR 100K +-1% .063W TKF TC0+-200	09891	RK73H1J1003F
R54	0699-3924	1	RESISTOR 100 +-1% .063W TKF TC0+-200	00746	MCR03-F-1000
R55	0699-3924	1	RESISTOR 100 +-1% .063W TKF TC0+-200	00746	MCR03-F-1000
R56	0699-3993	1	RESISTOR 100K +-1% .063W TKF TC0+-200	09891	RK73H1J1003F
R57	0699-3924	1	RESISTOR 100 +-1% .063W TKF TC0+-200	00746	MCR03-F-1000
R58	0699-3924	1	RESISTOR 100 +-1% .063W TKF TC0+-200	00746	MCR03-F-1000
R59	0699-3993	1	RESISTOR 100K +-1% .063W TKF TC0+-200	09891	RK73H1J1003F
R60	0699-3924	1	RESISTOR 100 +-1% .063W TKF TC0+-200	00746	MCR03-F-1000
R61	0699-3924	1	RESISTOR 100 +-1% .063W TKF TC0+-200	00746	MCR03-F-1000
R62	0699-3993	1	RESISTOR 100K +-1% .063W TKF TC0+-200	09891	RK73H1J1003F
R63	0699-3924	1	RESISTOR 100 +-1% .063W TKF TC0+-200	00746	MCR03-F-1000

Agilent Part Number E4401-60004
1.5 GHz Tracking Generator RF (50 Ohm)

Reference Designator	Agilent Part Number	Qty	Description	Mgr Code	Mfr Part Number
R64	0699-3924	1	RESISTOR 100 +-1% .063W TKF TC0+-200	00746	MCR03-F-1000
R65	0699-3993	1	RESISTOR 100K +-1% .063W TKF TC0+-200	09891	RK73H1J1003F
R66	0699-3924	1	RESISTOR 100 +-1% .063W TKF TC0+-200	00746	MCR03-F-1000
R67	0699-3924	1	RESISTOR 100 +-1% .063W TKF TC0+-200	00746	MCR03-F-1000
R68	0699-3993	1	RESISTOR 100K +-1% .063W TKF TC0+-200	09891	RK73H1J1003F
R69	0699-3924	1	RESISTOR 100 +-1% .063W TKF TC0+-200	00746	MCR03-F-1000
R70	0699-3924	1	RESISTOR 100 +-1% .063W TKF TC0+-200	00746	MCR03-F-1000
R71	0699-3993	1	RESISTOR 100K +-1% .063W TKF TC0+-200	09891	RK73H1J1003F
R72	0699-3947	1	RESISTOR 1K +-1% .063W TKF TC0+-200	00746	MCR03-F-1001
R73	0699-3947	1	RESISTOR 1K +-1% .063W TKF TC0+-200	00746	MCR03-F-1001
R74	0699-3964	1	RESISTOR 5.11K +-1% .063W TKF TC0+-200	09891	RK73H1J5111F
R75	0699-3954	1	RESISTOR 1.96K +-1% .063W TKF TC0+-200	09891	RK73H1J1961F
R76	0699-3964	1	RESISTOR 5.11K +-1% .063W TKF TC0+-200	09891	RK73H1J5111F
R77	0699-3947	1	RESISTOR 1K +-1% .063W TKF TC0+-200	00746	MCR03-F-1001
R78	0699-3993	1	RESISTOR 100K +-1% .063W TKF TC0+-200	09891	RK73H1J1003F
R79	0699-3993	1	RESISTOR 100K +-1% .063W TKF TC0+-200	09891	RK73H1J1003F
R80	0699-3946	1	RESISTOR 909 +-1% .063W TKF TC0+-200	00746	MCR03-F-9090
R81	0699-3924	1	RESISTOR 100 +-1% .063W TKF TC0+-200	00746	MCR03-F-1000
R82	0699-3924	1	RESISTOR 100 +-1% .063W TKF TC0+-200	00746	MCR03-F-1000
R83	0699-3924	1	RESISTOR 100 +-1% .063W TKF TC0+-200	00746	MCR03-F-1000
R84	0699-3924	1	RESISTOR 100 +-1% .063W TKF TC0+-200	00746	MCR03-F-1000
R85	0699-3944	1	RESISTOR 750 +-1% .063W TKF TC0+-200	09891	RK73H1J7500F
R86	0699-3955	1	RESISTOR 2.15K +-1% .063W TKF TC0+-200	09891	RK73H1J2151F
R87	0699-3962	1	RESISTOR 4.22K +-1% .063W TKF TC0+-200	09891	RK73H1J4221F
R88	0699-3955	1	RESISTOR 2.15K +-1% .063W TKF TC0+-200	09891	RK73H1J2151F
R89	0699-3970	1	RESISTOR 10K +-1% .063W TKF TC0+-200	09891	RK73H1J1002F
R90	0699-3935	1	RESISTOR 287 +-1% .063W TKF TC0+-200	00746	MCR03-F-2870
R91	0699-1415	1	RESISTOR 100 +-1% .125W TKF TC0+-100	05524	CRCW12061000F
R92	0699-3951	1	RESISTOR 1.47K +-1% .063W TKF TC0+-200	00746	MCR03-F-1471
R93	0699-3950	1	RESISTOR 1.33K +-1% .063W TKF TC0+-200	09891	RK73H1J1331F

 **Indicates factory-selected value*

Agilent Part Number E4401-60004
1.5 GHz Tracking Generator RF (50 Ohm)

Reference Designator	Agilent Part Number	Qty	Description	Mgr Code	Mfr Part Number
R94	1810-1231	1	NET-RES 8 100.0 OHM 16-PIN	05524	SOMC16-03-101G
R95	0699-3951	1	RESISTOR 1.47K +-1% .063W TKF TC0+-200	00746	MCR03-F-1471
R96	0699-3970	1	RESISTOR 10K +-1% .063W TKF TC0+-200	09891	RK73H1J1002F
R97	0699-3924	1	RESISTOR 100 +-1% .063W TKF TC0+-200	00746	MCR03-F-1000
R98	0699-3924	1	RESISTOR 100 +-1% .063W TKF TC0+-200	00746	MCR03-F-1000
R99	0699-3951	1	RESISTOR 1.47K +-1% .063W TKF TC0+-200	00746	MCR03-F-1471
R100	0699-3950	1	RESISTOR 1.33K +-1% .063W TKF TC0+-200	09891	RK73H1J1331F
R101	0699-3924	1	RESISTOR 100 +-1% .063W TKF TC0+-200	00746	MCR03-F-1000
R102	0699-3951	1	RESISTOR 1.47K +-1% .063W TKF TC0+-200	00746	MCR03-F-1471
R103	0699-3970	1	RESISTOR 10K +-1% .063W TKF TC0+-200	09891	RK73H1J1002F
R104	0699-3924	1	RESISTOR 100 +-1% .063W TKF TC0+-200	00746	MCR03-F-1000
R105	0699-3924	1	RESISTOR 100 +-1% .063W TKF TC0+-200	00746	MCR03-F-1000
R106	0699-3924	1	RESISTOR 100 +-1% .063W TKF TC0+-200	00746	MCR03-F-1000
R107	0699-3951	1	RESISTOR 1.47K +-1% .063W TKF TC0+-200	00746	MCR03-F-1471
R108	0699-3950	1	RESISTOR 1.33K +-1% .063W TKF TC0+-200	09891	RK73H1J1331F
R109	0699-3951	1	RESISTOR 1.47K +-1% .063W TKF TC0+-200	00746	MCR03-F-1471
R110	0699-3970	1	RESISTOR 10K +-1% .063W TKF TC0+-200	09891	RK73H1J1002F
R111	0699-3924	1	RESISTOR 100 +-1% .063W TKF TC0+-200	00746	MCR03-F-1000
R112	0699-3924	1	RESISTOR 100 +-1% .063W TKF TC0+-200	00746	MCR03-F-1000
R113	0699-3987	1	RESISTOR 51.1K +-1% .063W TKF TC0+-200	09891	RK73H1J5112F
R114	0699-1391	1	RESISTOR 10K +-1% .125W TKF TC0+-100	05524	CRCW12061002F
R115	0699-3987	1	RESISTOR 51.1K +-1% .063W TKF TC0+-200	09891	RK73H1J5112F
R116	0699-3987	1	RESISTOR 51.1K +-1% .063W TKF TC0+-200	09891	RK73H1J5112F
R117	0699-3987	1	RESISTOR 51.1K +-1% .063W TKF TC0+-200	09891	RK73H1J5112F
R118	0699-3987	1	RESISTOR 51.1K +-1% .063W TKF TC0+-200	09891	RK73H1J5112F
R119	0699-3993	1	RESISTOR 100K +-1% .063W TKF TC0+-200	09891	RK73H1J1003F
R120	0699-4016	1	RESISTOR 1M +-1% .063W TKF TC0+-200	00746	MCR03-F-1004
R121	0699-3993	1	RESISTOR 100K +-1% .063W TKF TC0+-200	09891	RK73H1J1003F
R122	0699-3993	1	RESISTOR 100K +-1% .063W TKF TC0+-200	09891	RK73H1J1003F
R123	0699-3993	1	RESISTOR 100K +-1% .063W TKF TC0+-200	09891	RK73H1J1003F

Agilent Part Number E4401-60004
1.5 GHz Tracking Generator RF (50 Ohm)

Reference Designator	Agilent Part Number	Qty	Description	Mgr Code	Mfr Part Number
R124	0699-4016	1	RESISTOR 1M +-1% .063W TKF TC0+-200	00746	MCR03-F-1004
R125	0699-3993	1	RESISTOR 100K +-1% .063W TKF TC0+-200	09891	RK73H1J1003F
R126	0699-3970	1	RESISTOR 10K +-1% .063W TKF TC0+-200	09891	RK73H1J1002F
R127	0699-3970	1	RESISTOR 10K +-1% .063W TKF TC0+-200	09891	RK73H1J1002F
R128	0699-3964	1	RESISTOR 5.11K +-1% .063W TKF TC0+-200	09891	RK73H1J5111F
R129	0699-3924	1	RESISTOR 100 +-1% .063W TKF TC0+-200	00746	MCR03-F-1000
R130	0699-3970	1	RESISTOR 10K +-1% .063W TKF TC0+-200	09891	RK73H1J1002F
R131	0699-3970	1	RESISTOR 10K +-1% .063W TKF TC0+-200	09891	RK73H1J1002F
R132	0699-3964	1	RESISTOR 5.11K +-1% .063W TKF TC0+-200	09891	RK73H1J5111F
R133	0699-3924	1	RESISTOR 100 +-1% .063W TKF TC0+-200	00746	MCR03-F-1000
R134	0699-3947	1	RESISTOR 1K +-1% .063W TKF TC0+-200	00746	MCR03-F-1001
R135	0699-3924	1	RESISTOR 100 +-1% .063W TKF TC0+-200	00746	MCR03-F-1000
R136	0699-3955	1	RESISTOR 2.15K +-1% .063W TKF TC0+-200	09891	RK73H1J2151F
R137	0699-3946	1	RESISTOR 909 +-1% .063W TKF TC0+-200	00746	MCR03-F-9090
R138	0699-3970	1	RESISTOR 10K +-1% .063W TKF TC0+-200	09891	RK73H1J1002F
R139	0699-3970	1	RESISTOR 10K +-1% .063W TKF TC0+-200	09891	RK73H1J1002F
R140	0811-3575	1	RESISTOR 3K +-2% .125W PN TC+5600+-300	02499	R3118
R141	0699-3970	1	RESISTOR 10K +-1% .063W TKF TC0+-200	09891	RK73H1J1002F
R142	0699-3970	1	RESISTOR 10K +-1% .063W TKF TC0+-200	09891	RK73H1J1002F
R143	0699-3987	1	RESISTOR 51.1K +-1% .063W TKF TC0+-200	09891	RK73H1J5112F
R144	0699-3947	1	RESISTOR 1K +-1% .063W TKF TC0+-200	00746	MCR03-F-1001
R145	0699-3947	1	RESISTOR 1K +-1% .063W TKF TC0+-200	00746	MCR03-F-1001
R146	0699-3923	1	RESISTOR 90.9 +-1% .063W TKF TC0+-200	00746	MCR03-F-90R9
R147	0699-3987	1	RESISTOR 51.1K +-1% .063W TKF TC0+-200	09891	RK73H1J5112F
R148	0699-3970	1	RESISTOR 10K +-1% .063W TKF TC0+-200	09891	RK73H1J1002F
R149	0699-3968	1	RESISTOR 8.25K +-1% .063W TKF TC0+-200	09891	RK73H1J8251F
R150	0699-3993	1	RESISTOR 100K +-1% .063W TKF TC0+-200	09891	RK73H1J1003F
R151	0699-3987	1	RESISTOR 51.1K +-1% .063W TKF TC0+-200	09891	RK73H1J5112F
R152	0699-3993	1	RESISTOR 100K +-1% .063W TKF TC0+-200	09891	RK73H1J1003F
R153	0699-3987	1	RESISTOR 51.1K +-1% .063W TKF TC0+-200	09891	RK73H1J5112F

 **Indicates factory-selected value*

Agilent Part Number E4401-60004
1.5 GHz Tracking Generator RF (50 Ohm)

Reference Designator	Agilent Part Number	Qty	Description	Mgr Code	Mfr Part Number
R154	0699-3987	1	RESISTOR 51.1K +-1% .063W TKF TC0+-200	09891	RK73H1J5112F
R155	0699-3955	1	RESISTOR 2.15K +-1% .063W TKF TC0+-200	09891	RK73H1J2151F
R156	0699-3968	1	RESISTOR 8.25K +-1% .063W TKF TC0+-200	09891	RK73H1J8251F
R157	0699-3993	1	RESISTOR 100K +-1% .063W TKF TC0+-200	09891	RK73H1J1003F
R158	0699-3993	1	RESISTOR 100K +-1% .063W TKF TC0+-200	09891	RK73H1J1003F
R159	0699-3955	1	RESISTOR 2.15K +-1% .063W TKF TC0+-200	09891	RK73H1J2151F
R160	0699-3959	1	RESISTOR 3.16K +-1% .063W TKF TC0+-200	00746	MCR03-F-3161
R161	0699-3959	1	RESISTOR 3.16K +-1% .063W TKF TC0+-200	00746	MCR03-F-3161
R162	0699-3955	1	RESISTOR 2.15K +-1% .063W TKF TC0+-200	09891	RK73H1J2151F
R163	0699-3959	1	RESISTOR 3.16K +-1% .063W TKF TC0+-200	00746	MCR03-F-3161
R164	0699-3959	1	RESISTOR 3.16K +-1% .063W TKF TC0+-200	00746	MCR03-F-3161
R165	0699-3935	1	RESISTOR 287 +-1% .063W TKF TC0+-200	00746	MCR03-F-2870
R166	0699-3985	1	RESISTOR 42.2K +-1% .063W TKF TC0+-200	09891	RK73H1J4222F
R167	0699-3970	1	RESISTOR 10K +-1% .063W TKF TC0+-200	09891	RK73H1J1002F
R168	0699-3964	1	RESISTOR 5.11K +-1% .063W TKF TC0+-200	09891	RK73H1J5111F
R169	0699-3970	1	RESISTOR 10K +-1% .063W TKF TC0+-200	09891	RK73H1J1002F
R170	0811-3619	1	RESISTOR 260 +-2% .125W PN TC+3400+-300	02499	R3129
R171	0699-3908	1	RESISTOR 19.6 +-1% .063W TKF TC0+-200	09891	RK73H1J19R6F
R172	0699-4005	1	RESISTOR 316K +-1% .063W TKF TC0+-200	09891	RK73H1J3163F
R173	0811-3575	1	RESISTOR 3K +-2% .125W PN TC+5600+-300	02499	R3118
R174	0699-3977	1	RESISTOR 19.6K +-1% .063W TKF TC0+-200	09891	RK73H1J1962F
R175	0699-3970	1	RESISTOR 10K +-1% .063W TKF TC0+-200	09891	RK73H1J1002F
R176	0699-3970	1	RESISTOR 10K +-1% .063W TKF TC0+-200	09891	RK73H1J1002F
R177	0699-3982	1	RESISTOR 31.6K +-1% .063W TKF TC0+-200	09891	RK73H1J3162F
R178	0699-4005	1	RESISTOR 316K +-1% .063W TKF TC0+-200	09891	RK73H1J3163F
R179	0699-3924	1	RESISTOR 100 +-1% .063W TKF TC0+-200	00746	MCR03-F-1000
R180	0699-3970	1	RESISTOR 10K +-1% .063W TKF TC0+-200	09891	RK73H1J1002F
R181	0699-3970	1	RESISTOR 10K +-1% .063W TKF TC0+-200	09891	RK73H1J1002F
R182	1810-1581	1	NET-RES 4 33.0 OHM 8-PIN	00746	MNR34K5AWJ330
R183	0699-3924	1	RESISTOR 100 +-1% .063W TKF TC0+-200	00746	MCR03-F-1000

Agilent Part Number E4401-60004
1.5 GHz Tracking Generator RF (50 Ohm)

Reference Designator	Agilent Part Number	Qty	Description	Mgr Code	Mfr Part Number
R184	0699-3918	1	RESISTOR 51.1 +-1% .063W TKF TC0+-200	00746	MCR03-F-51R1
R186	0699-3918	1	RESISTOR 51.1 +-1% .063W TKF TC0+-200	00746	MCR03-F-51R1
R187	1810-1581	1	NET-RES 4 33.0 OHM 8-PIN	00746	MNR34K5AWJ330
R188	1810-1581	1	NET-RES 4 33.0 OHM 8-PIN	00746	MNR34K5AWJ330
R190	0699-1356	1	RESISTOR 31.6 +-1% .25W TKF TC0+-100	09891	RK73H2BT31R6F
R191	0699-3935	1	RESISTOR 287 +-1% .063W TKF TC0+-200	00746	MCR03-F-2870
R192	0699-2831	1	RESISTOR 150 +-0.1% .125W TF TC0+-25	02499	W1206R031500BT
R385	0699-3955	1	RESISTOR 2.15K +-1% .063W TKF TC0+-200	09891	RK73H1J2151F
R454	0699-3990	1	RESISTOR 75K +-1% .063W TKF TC0+-200	09891	RK73H1J7502F
R455	0699-3970	1	RESISTOR 10K +-1% .063W TKF TC0+-200	09891	RK73H1J1002F
R456	0699-3950	1	RESISTOR 1.33K +-1% .063W TKF TC0+-200	09891	RK73H1J1331F
R457	0699-3972	1	RESISTOR 12.1K +-1% .063W TKF TC0+-200	09891	RK73H1J1212F
R458	0699-3990	1	RESISTOR 75K +-1% .063W TKF TC0+-200	09891	RK73H1J7502F
R459	0699-3924	1	RESISTOR 100 +-1% .063W TKF TC0+-200	00746	MCR03-F-1000
R460	0699-3950	1	RESISTOR 1.33K +-1% .063W TKF TC0+-200	09891	RK73H1J1331F
R461	0699-1374	1	RESISTOR 1.78K +-1% .125W TKF TC0+-100	09891	RK73H2BT1781F
R462	0699-3932	1	RESISTOR 215 +-1% .063W TKF TC0+-200	00746	MCR03-F-2150
R463	0699-3970	1	RESISTOR 10K +-1% .063W TKF TC0+-200	09891	RK73H1J1002F
R464	0699-3929	1	RESISTOR 162 +-1% .063W TKF TC0+-200	09891	RK73H1J1620F
R465	0699-1363	1	RESISTOR 61.9 +-1% .125W TKF TC0+-100	05524	CRCW120661R9F
R466	0699-1416	1	RESISTOR 110 +-1% .125W TKF TC0+-100	05524	CRCW12061100F
R467	0699-1416	1	RESISTOR 110 +-1% .125W TKF TC0+-100	05524	CRCW12061100F
R468	0699-3918	1	RESISTOR 51.1 +-1% .063W TKF TC0+-200	00746	MCR03-F-51R1
R469	0699-3913	1	RESISTOR 31.6 +-1% .063W TKF TC0+-200	09891	RK73H1J31R6F
R470	0699-1416	1	RESISTOR 110 +-1% .125W TKF TC0+-100	05524	CRCW12061100F
R471	0699-1416	1	RESISTOR 110 +-1% .125W TKF TC0+-100	05524	CRCW12061100F
R472	0699-1416	1	RESISTOR 110 +-1% .125W TKF TC0+-100	05524	CRCW12061100F
R473	0699-3908	1	RESISTOR 19.6 +-1% .063W TKF TC0+-200	09891	RK73H1J19R6F
R474	0699-1358	1	RESISTOR 38.3 +-1% .125W TKF TC0+-100	09891	RK73H2BT38R3F
R475	0699-3941	1	RESISTOR 511 +-1% .063W TKF TC0+-200	00746	MCR03-F-5110

 **Indicates factory-selected value*

Agilent Part Number E4401-60004
1.5 GHz Tracking Generator RF (50 Ohm)

Reference Designator	Agilent Part Number	Qty	Description	Mgr Code	Mfr Part Number
R476	0699-1358	1	RESISTOR 38.3 +-1% .125W TKF TC0+-100	09891	RK73H2BT38R3F
R477	0699-1358	1	RESISTOR 38.3 +-1% .125W TKF TC0+-100	09891	RK73H2BT38R3F
R478	0699-1358	1	RESISTOR 38.3 +-1% .125W TKF TC0+-100	09891	RK73H2BT38R3F
R479	0699-3920	1	RESISTOR 68.1 +-1% .063W TKF TC0+-200	09891	RK73H1J68R1F
R480	0699-3947	1	RESISTOR 1K +-1% .063W TKF TC0+-200	00746	MCR03-F-1001
R481	0699-3901	1	RESISTOR 10 +-1% .063W TKF TC0+-200	00746	MCR03-F-10R0
R482	0699-3901	1	RESISTOR 10 +-1% .063W TKF TC0+-200	00746	MCR03-F-10R0
R483	0699-3930	1	RESISTOR 178 +-1% .063W TKF TC0+-200	00746	MCR03-F-1780
R484	0699-1357	1	RESISTOR 34.8 +-1% .125W TKF TC0+-100	09891	RK73H2BT34R8F
R485	0699-1415	1	RESISTOR 100 +-1% .125W TKF TC0+-100	05524	CRCW12061000F
R486	0699-1357	1	RESISTOR 34.8 +-1% .125W TKF TC0+-100	09891	RK73H2BT34R8F
R487	0699-1357	1	RESISTOR 34.8 +-1% .125W TKF TC0+-100	09891	RK73H2BT34R8F
R488	0699-1415	1	RESISTOR 100 +-1% .125W TKF TC0+-100	05524	CRCW12061000F
R489	0699-1415	1	RESISTOR 100 +-1% .125W TKF TC0+-100	05524	CRCW12061000F
R490	0699-3926	1	RESISTOR 121 +-1% .063W TKF TC0+-200	00746	MCR03-F-1210
R491	0699-3916	1	RESISTOR 42.2 +-1% .063W TKF TC0+-200	09891	RK73H1J42R2F
R492	0699-1357	1	RESISTOR 34.8 +-1% .125W TKF TC0+-100	09891	RK73H2BT34R8F
R493	0699-1357	1	RESISTOR 34.8 +-1% .125W TKF TC0+-100	09891	RK73H2BT34R8F
R494	0699-1415	1	RESISTOR 100 +-1% .125W TKF TC0+-100	05524	CRCW12061000F
R495	0699-3926	1	RESISTOR 121 +-1% .063W TKF TC0+-200	00746	MCR03-F-1210
R496	0699-3964	1	RESISTOR 5.11K +-1% .063W TKF TC0+-200	09891	RK73H1J5111F
R497	0699-3948	1	RESISTOR 1.1K +-1% .063W TKF TC0+-200	00746	MCR03-F-1101
R498	0699-3942	1	RESISTOR 619 +-1% .063W TKF TC0+-200	00746	MCR03-F-6190
R499	0699-3942	1	RESISTOR 619 +-1% .063W TKF TC0+-200	00746	MCR03-F-6190
R500	0699-3963	1	RESISTOR 4.64K +-1% .063W TKF TC0+-200	09891	RK73H1J4641F
R501	0699-3942	1	RESISTOR 619 +-1% .063W TKF TC0+-200	00746	MCR03-F-6190
R502	0699-3942	1	RESISTOR 619 +-1% .063W TKF TC0+-200	00746	MCR03-F-6190
R503	0699-3963	1	RESISTOR 4.64K +-1% .063W TKF TC0+-200	09891	RK73H1J4641F
R504	0699-3955	1	RESISTOR 2.15K +-1% .063W TKF TC0+-200	09891	RK73H1J2151F
R505	0699-3955	1	RESISTOR 2.15K +-1% .063W TKF TC0+-200	09891	RK73H1J2151F

Agilent Part Number E4401-60004
1.5 GHz Tracking Generator RF (50 Ohm)

Reference Designator	Agilent Part Number	Qty	Description	Mgr Code	Mfr Part Number
R506	0699-3918	1	RESISTOR 51.1 +-1% .063W TKF TC0+-200	00746	MCR03-F-51R1
R507	0699-3952	1	RESISTOR 1.62K +-1% .063W TKF TC0+-200	09891	RK73H1J1621F
R508	0699-3928	1	RESISTOR 147 +-1% .063W TKF TC0+-200	00746	MCR03-F-1470
R509	0699-3919	1	RESISTOR 61.9 +-1% .063W TKF TC0+-200	05524	CRCW060361R9F
R510	0699-3918	1	RESISTOR 51.1 +-1% .063W TKF TC0+-200	00746	MCR03-F-51R1
R511	0699-3963	1	RESISTOR 4.64K +-1% .063W TKF TC0+-200	09891	RK73H1J4641F
R512	0699-3970	1	RESISTOR 10K +-1% .063W TKF TC0+-200	09891	RK73H1J1002F
R513	0699-3952	1	RESISTOR 1.62K +-1% .063W TKF TC0+-200	09891	RK73H1J1621F
R514	0699-3964	1	RESISTOR 5.11K +-1% .063W TKF TC0+-200	09891	RK73H1J5111F
R515	0699-3574	1	RESISTOR 0 .0625W TKF	09891	RM73Z1JT
R516	0699-3964	1	RESISTOR 5.11K +-1% .063W TKF TC0+-200	09891	RK73H1J5111F
R517	0699-3941	1	RESISTOR 511 +-1% .063W TKF TC0+-200	00746	MCR03-F-5110
R518	0699-3918	1	RESISTOR 51.1 +-1% .063W TKF TC0+-200	00746	MCR03-F-51R1
R519	0699-3941	1	RESISTOR 511 +-1% .063W TKF TC0+-200	00746	MCR03-F-5110
R520	0699-3955	1	RESISTOR 2.15K +-1% .063W TKF TC0+-200	09891	RK73H1J2151F
R521	0699-3955	1	RESISTOR 2.15K +-1% .063W TKF TC0+-200	09891	RK73H1J2151F
R522	0699-3918	1	RESISTOR 51.1 +-1% .063W TKF TC0+-200	00746	MCR03-F-51R1
R523	0699-2831	1	RESISTOR 150 +-0.1% .125W TF TC0+-25	02499	W1206R031500BT
R524	0699-3955	1	RESISTOR 2.15K +-1% .063W TKF TC0+-200	09891	RK73H1J2151F
R525	0699-2831	1	RESISTOR 150 +-0.1% .125W TF TC0+-25	02499	W1206R031500BT
R526	0699-3939	1	RESISTOR 422 +-1% .063W TKF TC0+-200	09891	RK73H1J4220F
R527	0699-3903	1	RESISTOR 12.1 +-1% .063W TKF TC0+-200	09891	RK7H1J12R1F
R528	0699-3939	1	RESISTOR 422 +-1% .063W TKF TC0+-200	09891	RK73H1J4220F
R529	1810-1360	1	NET-RES 8 10.0K OHM 16-PIN	05524	SOMC-1603-103G
R530	0699-1422	1	RESISTOR 196 +-1% .125W TKF TC0+-100	09891	RK73H2BT1960F
R531	0699-1422	1	RESISTOR 196 +-1% .125W TKF TC0+-100	09891	RK73H2BT1960F
R532	0699-1422	1	RESISTOR 196 +-1% .125W TKF TC0+-100	09891	RK73H2BT1960F
R546	0699-3941	1	RESISTOR 511 +-1% .063W TKF TC0+-200	00746	MCR03-F-5110
R565	0699-3909	1	RESISTOR 21.5 +-1% .063W TKF TC0+-200	09891	RK73H1J21R5F
R573	0699-3930	1	RESISTOR 178 +-1% .063W TKF TC0+-200	00746	MCR03-F-1780

 **Indicates factory-selected value*

Agilent Part Number E4401-60004
1.5 GHz Tracking Generator RF (50 Ohm)

Reference Designator	Agilent Part Number	Qty	Description	Mgr Code	Mfr Part Number
R574	0699-3947	1	RESISTOR 1K +-1% .063W TKF TC0+-200	00746	MCR03-F-1001
R575	0699-3909	1	RESISTOR 21.5 +-1% .063W TKF TC0+-200	09891	RK73H1J21R5F
R576	0699-3955	1	RESISTOR 2.15K +-1% .063W TKF TC0+-200	09891	RK73H1J2151F
R577	0699-3964	1	RESISTOR 5.11K +-1% .063W TKF TC0+-200	09891	RK73H1J5111F
R578	0699-3941	1	RESISTOR 511 +-1% .063W TKF TC0+-200	00746	MCR03-F-5110
R579	0699-3918	1	RESISTOR 51.1 +-1% .063W TKF TC0+-200	00746	MCR03-F-51R1
R580	0699-3908	1	RESISTOR 19.6 +-1% .063W TKF TC0+-200	09891	RK73H1J19R6F
R581	0699-1422	1	RESISTOR 196 +-1% .125W TKF TC0+-100	09891	RK73H2BT1960F
U1	1820-4966	1	IC FF CMOS/HC D-TYPE POS-EDGE-TRIG	01698	SN74HC74D
U2	1826-2349	1	IC RF/IF AMPL LOW-NOISE 4 PIN	01542	INA-10386
U3	1826-2717	1	IC RF/IF AMPL 4 PIN U-WAVE-PILL	01542	MSA-0886
U4	1826-2421	1	IC RF/IF AMPL 4 PIN U-WAVE-PILL	01542	MSA-0505
U5	1826-1528	1	IC COMPARATOR LP QUAD 14 PIN PLSTC-SOIC	03406	LM339M
U6	1826-3348	1	IC MISC 16 PIN PLSTC-SOIC	02788	AT-220PIN
U7	1826-1528	1	IC COMPARATOR LP QUAD 14 PIN PLSTC-SOIC	03406	LM339M
U8	1826-3348	1	IC MISC 16 PIN PLSTC-SOIC	02788	AT-220PIN
U9	1826-1528	1	IC COMPARATOR LP QUAD 14 PIN PLSTC-SOIC	03406	LM339M
U10	1826-1594	1	IC COMPARATOR GP SINGLE 8 PIN PLSTC-SOIC	03406	LM311M
U11	1826-1528	1	IC COMPARATOR LP QUAD 14 PIN PLSTC-SOIC	03406	LM339M
U12	1826-1135	1	IC OP AMP PRCN 8 PIN DIP-C	03285	OP-27EZ
U13	1826-1862	1	IC OP AMP LOW-BIAS-H-IMPD DUAL 8 PIN	04078	TL072CD
U14	1826-1135	1	IC OP AMP PRCN 8 PIN DIP-C	03285	OP-27EZ
U15	1820-4693	1	IC GATE CMOS/HC AND QUAD 2-INP	01698	SN74HC08D
U16	1826-1862	1	IC OP AMP LOW-BIAS-H-IMPD DUAL 8 PIN	04078	TL072CD
U17	1826-1528	1	IC COMPARATOR LP QUAD 14 PIN PLSTC-SOIC	03406	LM339M
U18	1826-1135	1	IC OP AMP PRCN 8 PIN DIP-C	03285	OP-27EZ
U19	1826-1594	1	IC COMPARATOR GP SINGLE 8 PIN PLSTC-SOIC	03406	LM311M
U20	1826-1594	1	IC COMPARATOR GP SINGLE 8 PIN PLSTC-SOIC	03406	LM311M

**Indicates factory-selected value*

Agilent Part Number E4401-60004
1.5 GHz Tracking Generator RF (50 Ohm)

Reference Designator	Agilent Part Number	Qty	Description	Mgr Code	Mfr Part Number
U21	1826-1458	1	D/A 8-DGT 16-P-SOIC	02910	DAC-08ED
U22	1826-1862	1	IC OP AMP LOW-BIAS-H-IMPD DUAL 8 PIN	04078	TL072CD
U23	1820-5220	1	IC INV CMOS/HC HEX	01698	SN74HC04D
U24	1818-5236	1	IC 4K-BIT EEPROM 500-NS CMOS	04078	M93C66-MN6
U25	1820-6277	1	IC SHF-RGTR CMOS/HC SYNC/ASYNC SERIAL-IN	02237	MM74HC595M
U26	1820-6277	1	IC SHF-RGTR CMOS/HC SYNC/ASYNC SERIAL-IN	02237	MM74HC595M
U27	1820-6277	1	IC SHF-RGTR CMOS/HC SYNC/ASYNC SERIAL-IN	02237	MM74HC595M
U28	1820-4215	1	IC DCDR-DEMUXR CMOS/HC BIN 3-TO-8-LINE	02910	74HC138D
U29	1820-6277	1	IC SHF-RGTR CMOS/HC SYNC/ASYNC SERIAL-IN	02237	MM74HC595M
U30	1820-6277	1	IC SHF-RGTR CMOS/HC SYNC/ASYNC SERIAL-IN	02237	MM74HC595M
U31	1826-1619	1	D/A 8-BIT 20-PLCC CMOS	03285	AD7528JP
U32	1826-1862	1	IC OP AMP LOW-BIAS-H-IMPD DUAL 8 PIN	04078	TL072CD
U33	1820-6277	1	IC SHF-RGTR CMOS/HC SYNC/ASYNC SERIAL-IN	02237	MM74HC595M
U34	1826-1950	1	IC COMPARATOR HS SINGLE 8 PIN PLSTC-SOIC	10858	LT1016CS8
U35	1820-6154	1	IC-PROGRAMMABLE INTERVAL TIMER	28480	1820-6154
U36	1820-6406	1	IC CNTR CMOS/HC BIN UP/DOWN SYNCHRO	02910	74HC191D
U37	1820-6406	1	IC CNTR CMOS/HC BIN UP/DOWN SYNCHRO	02910	74HC191D
U38	1820-6406	1	IC CNTR CMOS/HC BIN UP/DOWN SYNCHRO	02910	74HC191D
U39	1826-2153	1	D/A 12-BIT 20-PLCC CMOS	03285	AD7545AKP
U40	1826-1862	1	IC OP AMP LOW-BIAS-H-IMPD DUAL 8 PIN	04078	TL072CD
U41	1826-1687	1	IC PWR MGT-V-REF-FXD 9.95/10.05V 8 PINS	10858	LT1021DCS8-10
U42	1820-4220	1	IC GATE CMOS/HC OR QUAD 2-INP	02910	74HC32D
U65	1826-2888	1	IC TEMP XDCR PRCN SINGLE 8 PIN	03406	LM335AM
U66	1826-2717	1	IC RF/IF AMPL 4 PIN U-WAVE-PILL	01542	MSA-0886
U67	1826-2133	1	IC RF/IF AMPL WB 4 PIN U-WAVE-PILL	01542	MSA-1105

 **Indicates factory-selected value*

Agilent Part Number E4401-60004
1.5 GHz Tracking Generator RF (50 Ohm)

Reference Designator	Agilent Part Number	Qty	Description	Mgr Code	Mfr Part Number
U68	1826-2204	1	IC RF/IF AMPL SINGLE 4 PIN U-WAVE-PILL	01542	MSA-0686
U69	1820-5945	1	IC GATE CMOS/AC NAND QUAD 2-INP	36633	MC74AC00D
U71	1820-5937	1	IC FF CMOS/AC D-TYPE POS-EDGE-TRIG	02237	74AC74SC.
U72	1826-1925	1	IC OP AMP LOW-NOISE SINGLE 8 PIN	03285	OP-27GS
U73	1826-3000	1	IC AUDIO AMPL LOW-NOISE DUAL 8 PIN	03285	OP275GS
U74	1821-2086	1	IC PRESCALER ECL 8-SOIC	02037	MC12026AD
U75	1820-5938	1	IC GATE CMOS/ACT NAND QUAD 2-INP	01698	SN74ACT00D
U76	1820-7218	1	IC CNTR CMOS/AC BIN SYNCHRO	02237	74AC163SCX.

S300

SYM	REVISIONS	APPROVED	DATE
A	AS ISSUED ML	BROWN/	09-12-96
B	J6 MARKED AS NEVER LOAD /RO.	BROWN	10-16-96

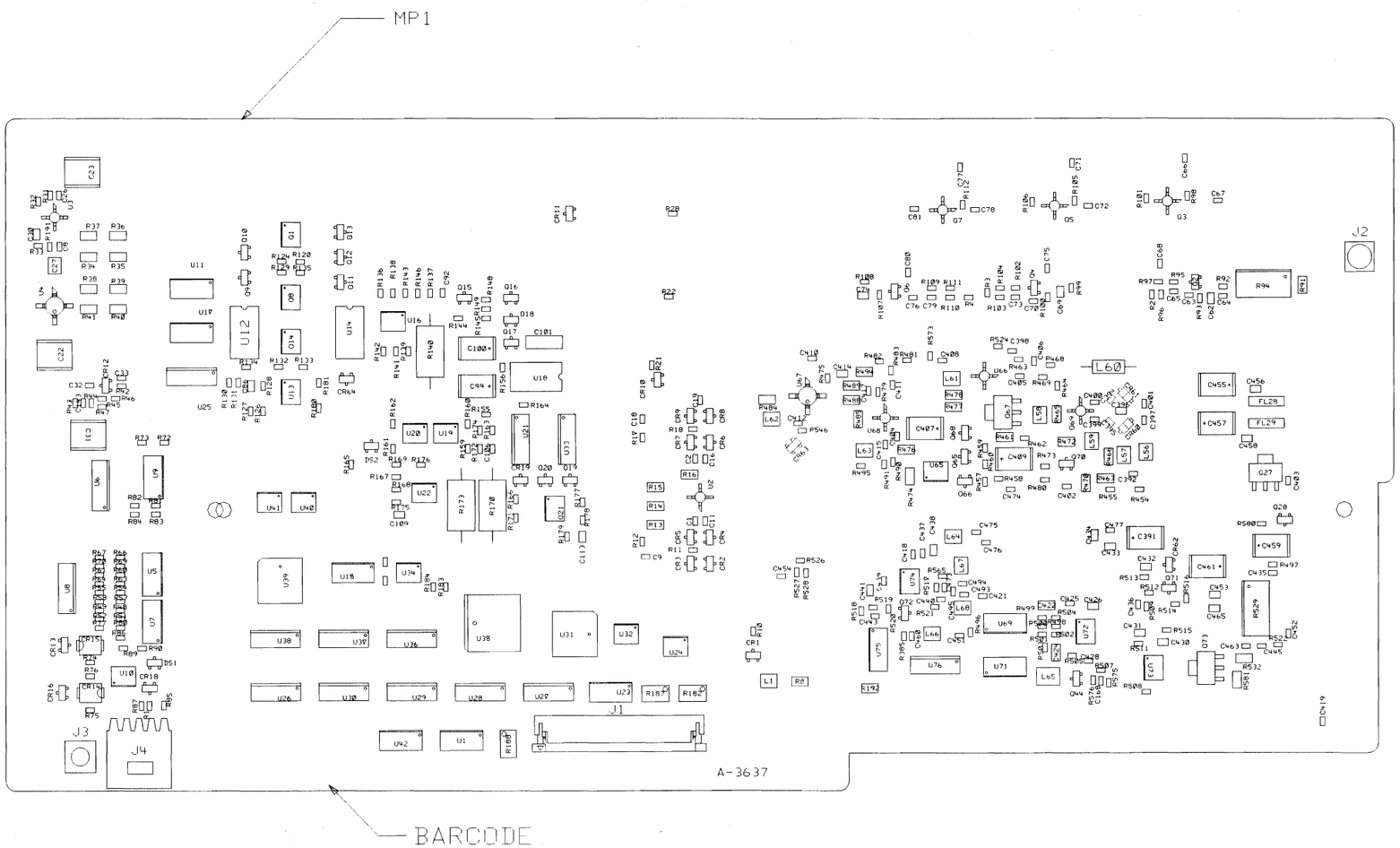

NOTES: UNLESS OTHERWISE SPECIFIED

1. USE RAW BOARD PART NUMBER E4401-20004.
2. THERE ARE NUMEROUS PART TO PART SPACING VIOLATIONS.
3. HATCHED COMPONENTS ARE NOT LOADED.

(TOP SIDE)

FOR MATERIAL LIST SEE E4401-60004

HP RESTRICTED
THIS DOCUMENT CONTAINS CONFIDENTIAL, PROPRIETARY INFORMATION THAT IS HEWLETT-PACKARD (HP) PROPERTY. DO NOT DISCLOSE TO OR DUPLICATE FOR OTHERS EXCEPT AS AUTHORIZED BY HP.

UNLESS OTHERWISE SPECIFIED. DIMENSIONS ARE IN INCHES.	R ODAY DRAWN BY	DATE	ASSEMBLY. PWB SOURCE RF
TOLERANCES: xx.xxx ±.010 xx.xx ±.02	PAT BROWN ENGINEER/CHECKER	DATE	
THIRD ANGLE PROJECTION	PAT BROWN RELEASE TO PROD.	09-12-96 DATE	
DO NOT SCALE THIS DRAWING	SUPERSEDES DWG.		TITLE

a1ae0004 FILENAME
SCALE NONE
SHEET 1 OF 2
HEWLETT PACKARD
E4401-60004 PART NUMBER
D-E4401-60004-2

5300 D-

SYM	REVISIONS	APPROVED	DATE
A	SEE SHEET 1		

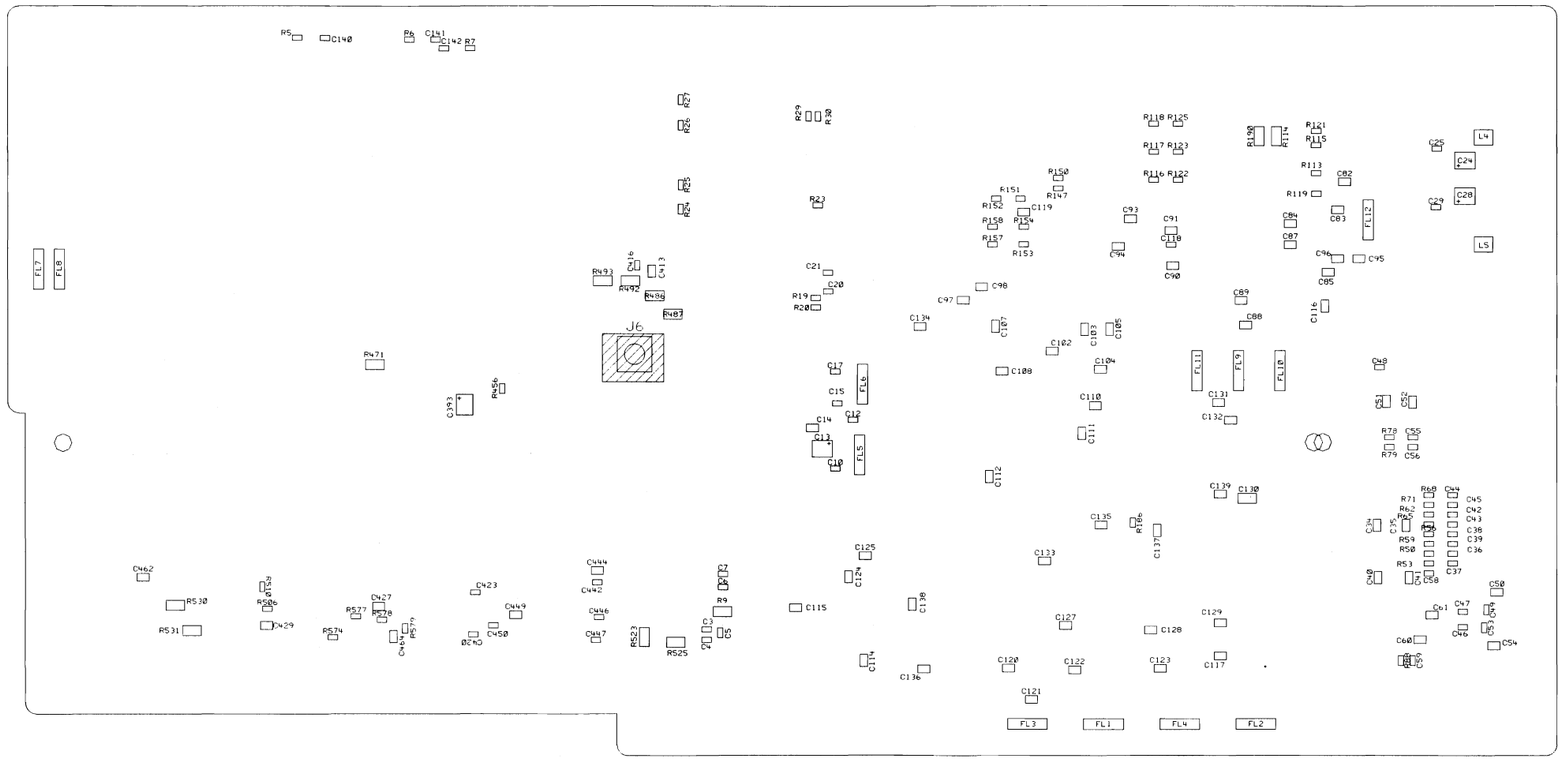

(BOTTOM SIDE)

HP RESTRICTED
THIS DOCUMENT CONTAINS CONFIDENTIAL, PROPRIETARY INFORMATION THAT IS HEWLETT-PACKARD (HP) PROPERTY. DO NOT DISCLOSE TO OR DUPLICATE FOR OTHERS EXCEPT AS AUTHORIZED BY HP.

UNLESS OTHERWISE SPECIFIED, DIMENSIONS ARE IN INCHES.
TOLERANCES: XX.XXX ±.010 XX.XX ±.02
THIRD ANGLE PROJECTION
DO NOT SCALE THIS DRAWING

R ODAY DRAWN BY	DATE
PAT BROWN ENGINEER/CHECKER	DATE
PAT BROWN RELEASE TO PROD.	09-12-96 DATE
SUPERSEDES DWG.	

TITLE: ASSEMBLY, PWB SOURCE RF

FILENAME: a6aea004
SCALE: NONE
SHEET 2 OF 2
PART NUMBER: E4401-60004
D-E4401-60004-2

HEWLETT PACKARD

D-E4401-60004-1

REV	INFORMATION	APPROVED	DATE
A	AS ISSUED		

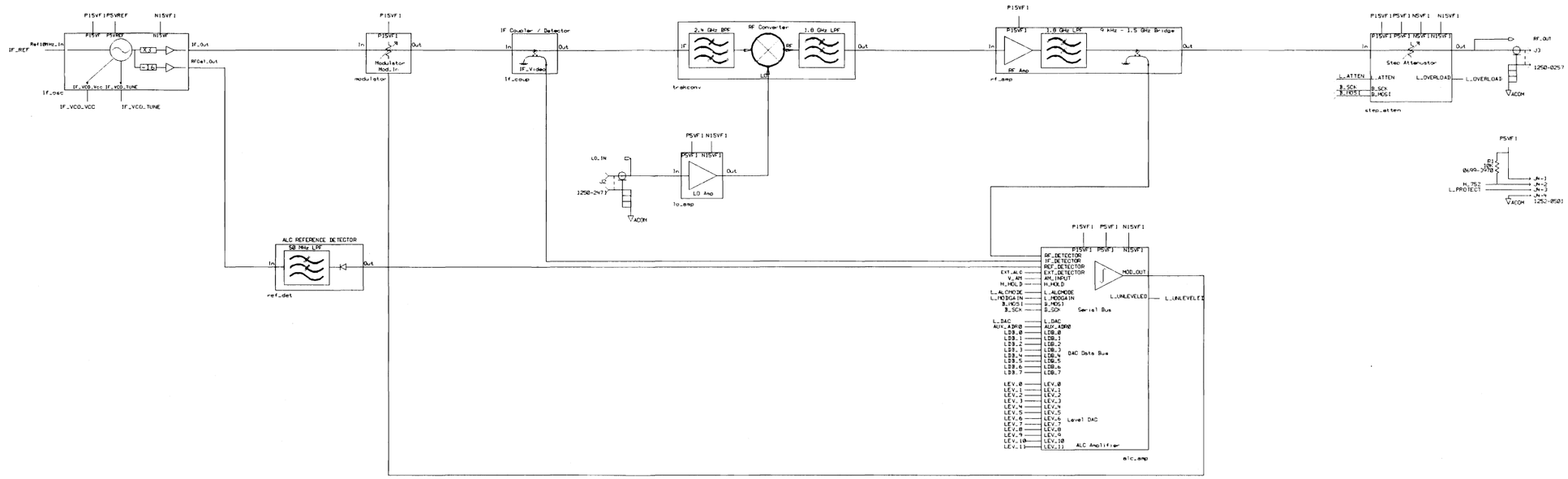

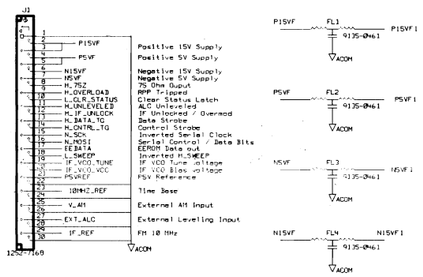

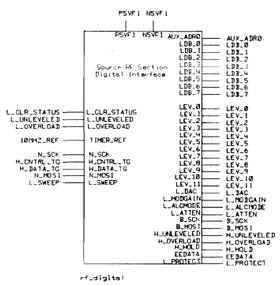

Measurement Conditions
Frequency: 20 MHz
Amplitude: -10 dBm
Output Atten: 0dB
Modulation: off
Room Temp: 25 Deg C

Test Points
TP None
TP ***end***

Reference Designators
U: None
QR: None
QS: None
FL1-FL4
J1-J4
L: None
Q1, Q8-Q21
R1
U: None

Re-Assignments
R8,C18-C21,R17,R19-R24
QR18 -> Q8
QS1 -> Q8
FL11 -> FL28
J5 -> J3
L5 -> L3
Q22 -> Q26
R9,R91,R137,R184-R3..
U42 -> U64

HP PROPRIETARY
THIS DOCUMENT CONTAINS CONFIDENTIAL, PROPRIETARY INFORMATION THAT IS HEWLETT-PACKARD (HP) PROPERTY. DO NOT DISCLOSE TO OR DUPLICATE FOR OTHERS EXCEPT AS AUTHORIZED BY HP.

LAST CHECKED	DATE	SCHEMATIC, PWA TRACKING GENERATOR RF BOARD INTERCONNECT DIAGRAM	HEWLETT PACKARD 5180
ENGINEER	SHEET 1 OF 1	TITLE	E4401-60004 PART NUMBER
DRAWN BY	SIZE D	PATHNAME hp_MOSO_TG/orcad.a/rf_board/RF_TOP sheet1	
	AA3637 ASSY. REV	A3637 BRD. REV	1 11 PAGE OF	D-E4401-60004-1 DWG. NO.

REVISIONS
SEE PAGE 1 FOR REVISION HISTORY

(0) IF OSCILLATOR AND 50 MHZ ALC REFERENCE

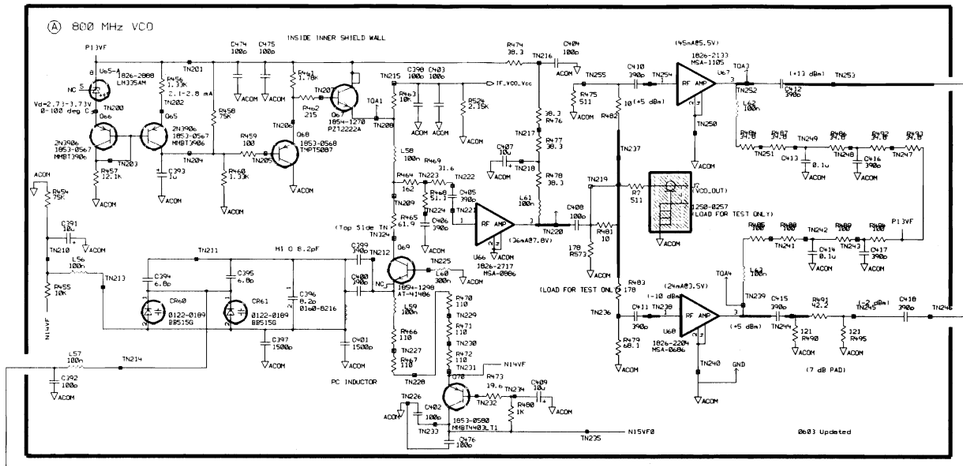

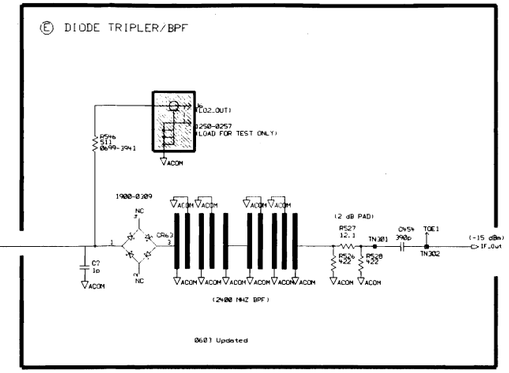

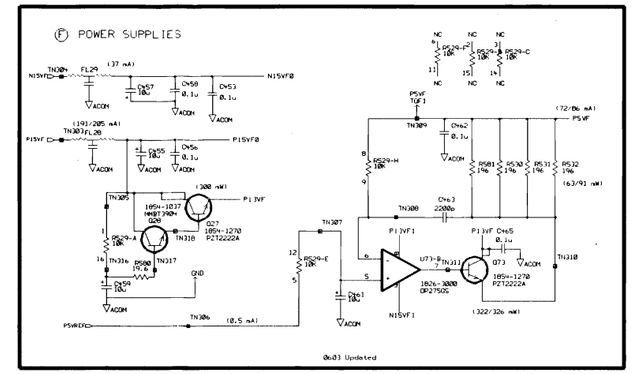

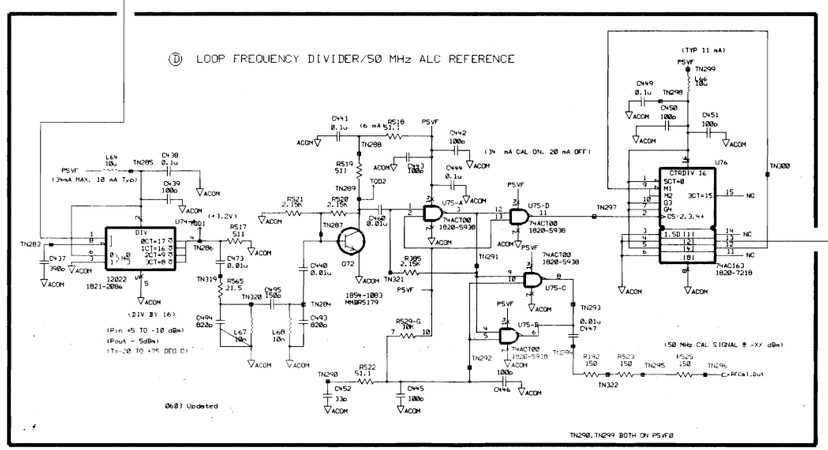

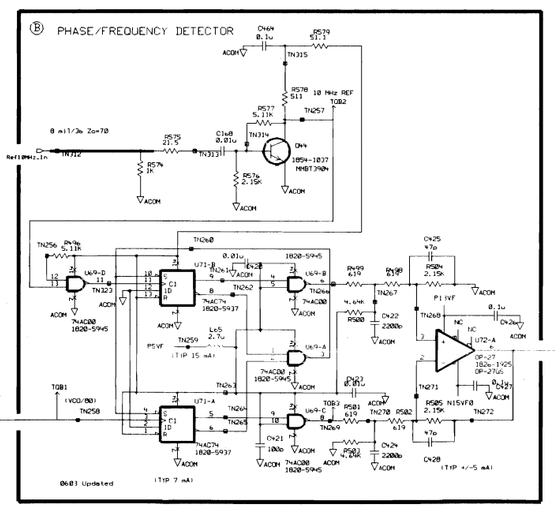

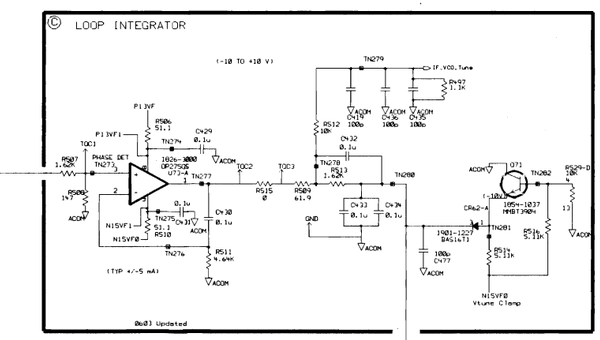

LAST TN324

TP# : PM062040 VIA
GND: PM080056 VIA

HP PROPRIETARY
THIS DOCUMENT CONTAINS CONFIDENTIAL, PROPRIETARY INFORMATION THAT IS HEWLETT-PACKARD (HP) PROPERTY. DO NOT DISCLOSE TO OR DUPLICATE FOR OTHERS EXCEPT AS AUTHORIZED BY HP.

LAST CHECKED	DATE	SCHEMATIC, PWA TRACKING GENERATOR RF BOARD IF OSCILLATOR	HEWLETT PACKARD 5100
ENGINEER	SHEET 1 OF 1		
DRAWN BY	SIZE D	TITLE	E4401-60004 PART NUMBER
	BA3637 ASSY. REV	A3637 BD. REV	2 11 PAGE OF
			D-E4401-60004-1 DWG. NO.

REVISIONS
SEE PAGE 1 FOR REVISION HISTORY

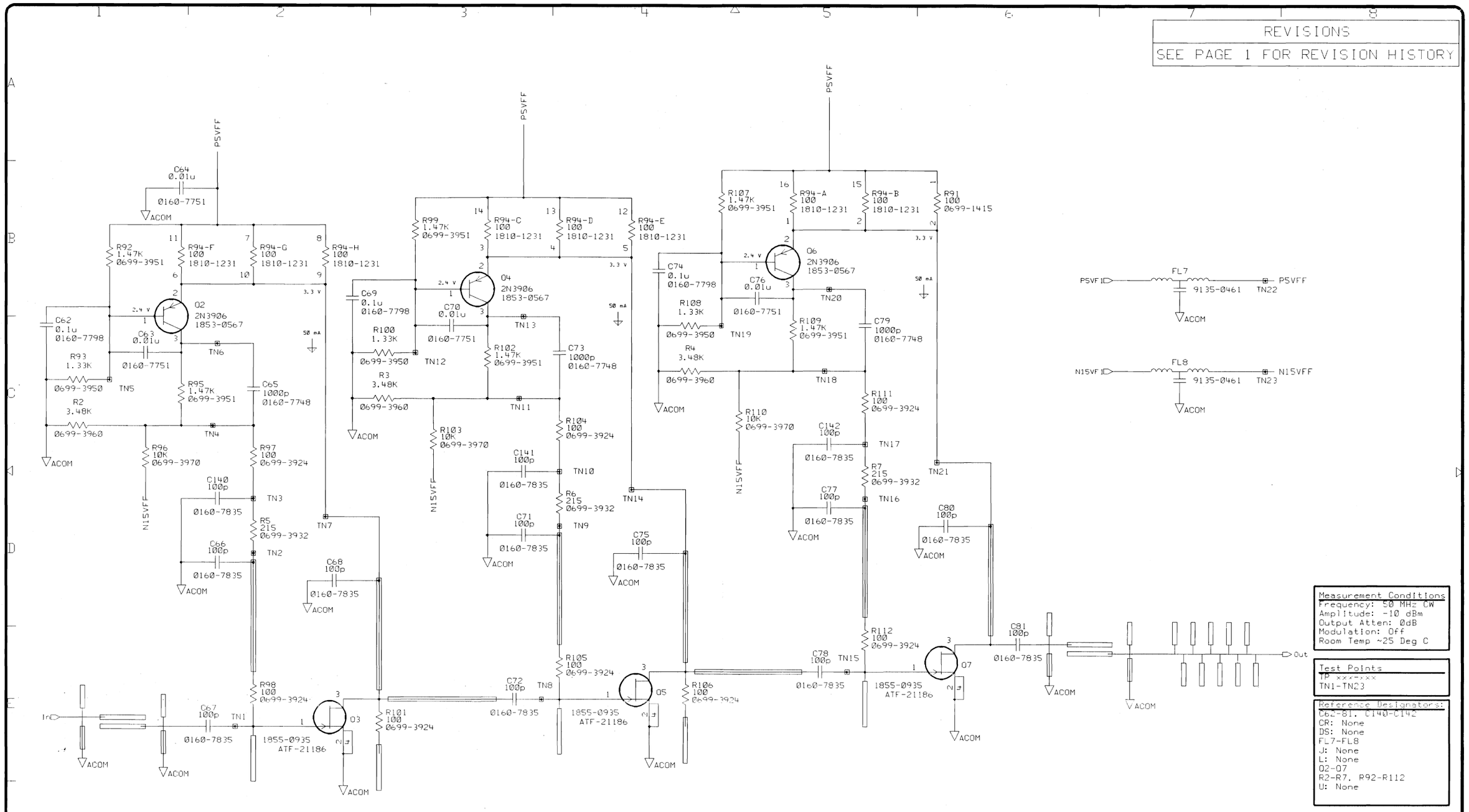

Measurement Conditions
Frequency: 50 MHz CW
Amplitude: -10 dBm
Output Atten: 0dB
Modulation: Off
Room Temp ~25 Deg C

Test Points
TP xxx-xxx
TN1-TN23

Reference Designators:
C62-81, C140-C142
CR: None
DS: None
FL7-FL8
J: None
L: None
Q2-Q7
R2-R7, R92-R112
U: None

HP PROPRIETARY
THIS DOCUMENT CONTAINS CONFIDENTIAL. PROPRIETARY INFORMATION THAT IS HEWLETT-PACKARD (HP) PROPERTY. DO NOT DISCLOSE TO OR DUPLICATE FOR OTHERS EXCEPT AS AUTHORIZED BY HP.

LAST CHECKED	DATE	SCHEMATIC, PWA TRACKING GENERATOR RF BOARD LO AMPLIFIER	HEWLETT PACKARD 5300
ENGINEER	SHEET 1 OF 1	TITLE	
DRAWN BY	SIZE B	$HP_E4401/60004/BA3637/rf_board/lo_amp sheet1 PATHNAME	E4401-60004 PART NUMBER
	BA3637 ASSY. REV	A3637 BRD. REV / PAGE 3 OF 11	B-E4401-60004-1 DWG. NO.

REVISIONS
SEE PAGE 1 FOR REVISION HISTORY

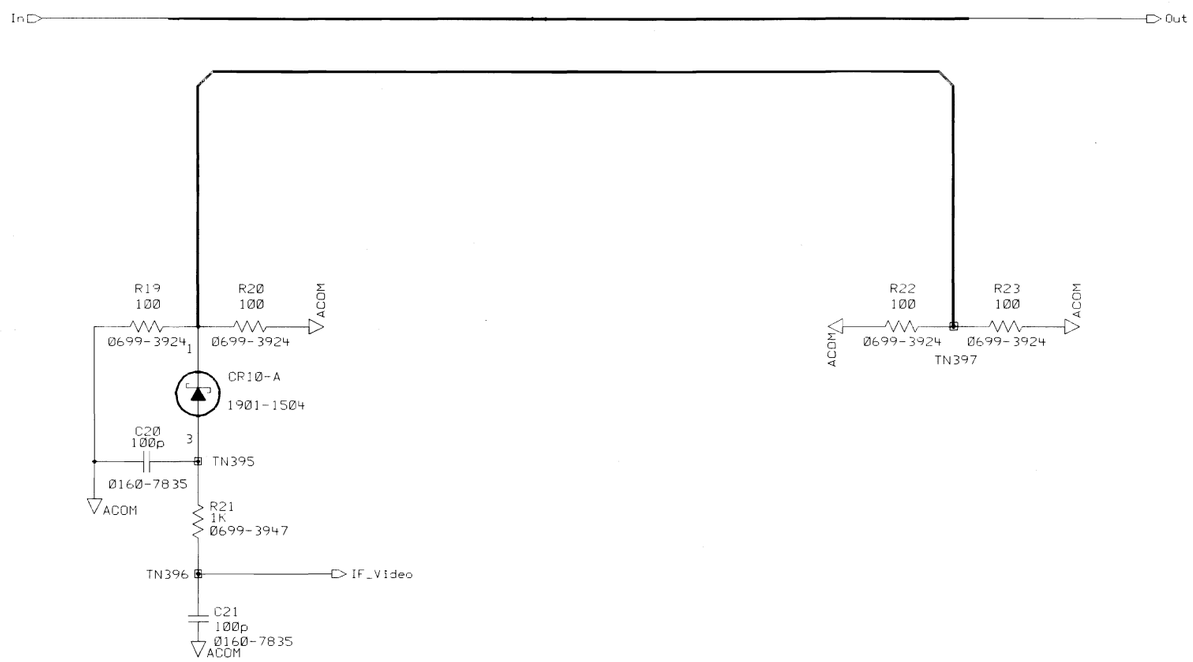

Measurement Conditions
Frequency: 50 MHz CW
Amplitude: -10 dBm
Output Atten: 0dB
Modulation: Off
Room Temp ~25 Deg C

Test Points
TP xxx-xxx
TN395-TN397

Reference Designators:
C20-C21
CR10
DS: None
FL: None
J: None
L: None
Q: None
R19-R23
U: None

HP PROPRIETARY
THIS DOCUMENT CONTAINS CONFIDENTIAL. PROPRIETARY INFORMATION THAT IS HEWLETT-PACKARD (HP) PROPERTY. DO NOT DISCLOSE TO OR DUPLICATE FOR OTHERS EXCEPT AS AUTHORIZED BY HP.

LAST CHECKED	DATE	SCHEMATIC. PWA TRACKING GENERATOR RF BOARD IF COUPLER / DET	HEWLETT PACKARD 5300
ENGINEER	SHEET 1 OF 1	TITLE	
DRAWN BY	SIZE B	$HP_E4401/60004/BA3637/rf_board/if_coup sheet1 PATHNAME	E4401-60004 PART NUMBER
	BA3637 ASSY. REV	A3637 BRD. REV	4 OF 11 PAGE
			B-E4401-60004-1 DWG. NO.

REVISIONS
SEE PAGE 1 FOR REVISION HISTORY

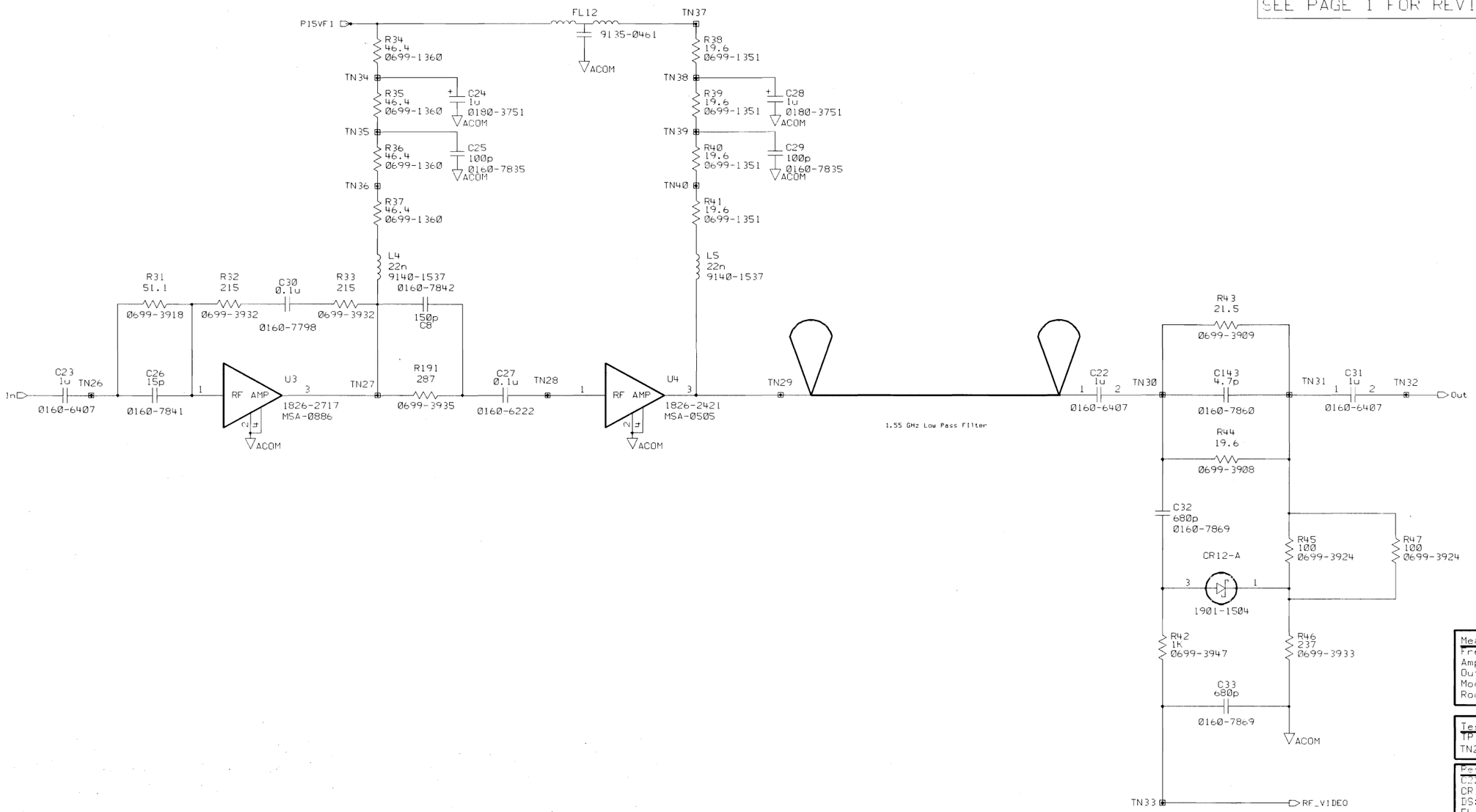

Measurement Conditions
Frequency: 50 MHz CW
Amplitude: -10 dBm
Output Atten: 0dB
Modulation: Off
Room Temp ~25 Deg C

Test Points
TP xxx-xxx
TN25-TN40

Reference Designators:
C22-C33
CR12
DS: None
FL12
J: None
L4-L5
Q: None
R34-R47
U3-U4

HP PROPRIETARY

THIS DOCUMENT CONTAINS CONFIDENTIAL. PROPRIETARY INFORMATION THAT IS HEWLETT-PACKARD (HP) PROPERTY. DO NOT DISCLOSE TO OR DUPLICATE FOR OTHERS EXCEPT AS AUTHORIZED BY HP.

LAST CHECKED	DATE	SCHEMATIC, PWA TRACKING GENERATOR RF Board RF Amplifier / RF Bridge TITLE	HEWLETT PACKARD 5300
ENGINEER	SHEET 1 OF 1		
DRAWN BY	SIZE B	$HP_E4401/60004/BA3637/rf_board/rf_amp sheet1 PATHNAME	E4401-60004 PART NUMBER
	BA3637 ASSY. REV	A3637 BRD. REV	5 OF 11 PAGE	B-E4401-60004-1 DWG. NO.

REVISIONS
SEE PAGE 1 FOR REVISION HISTORY

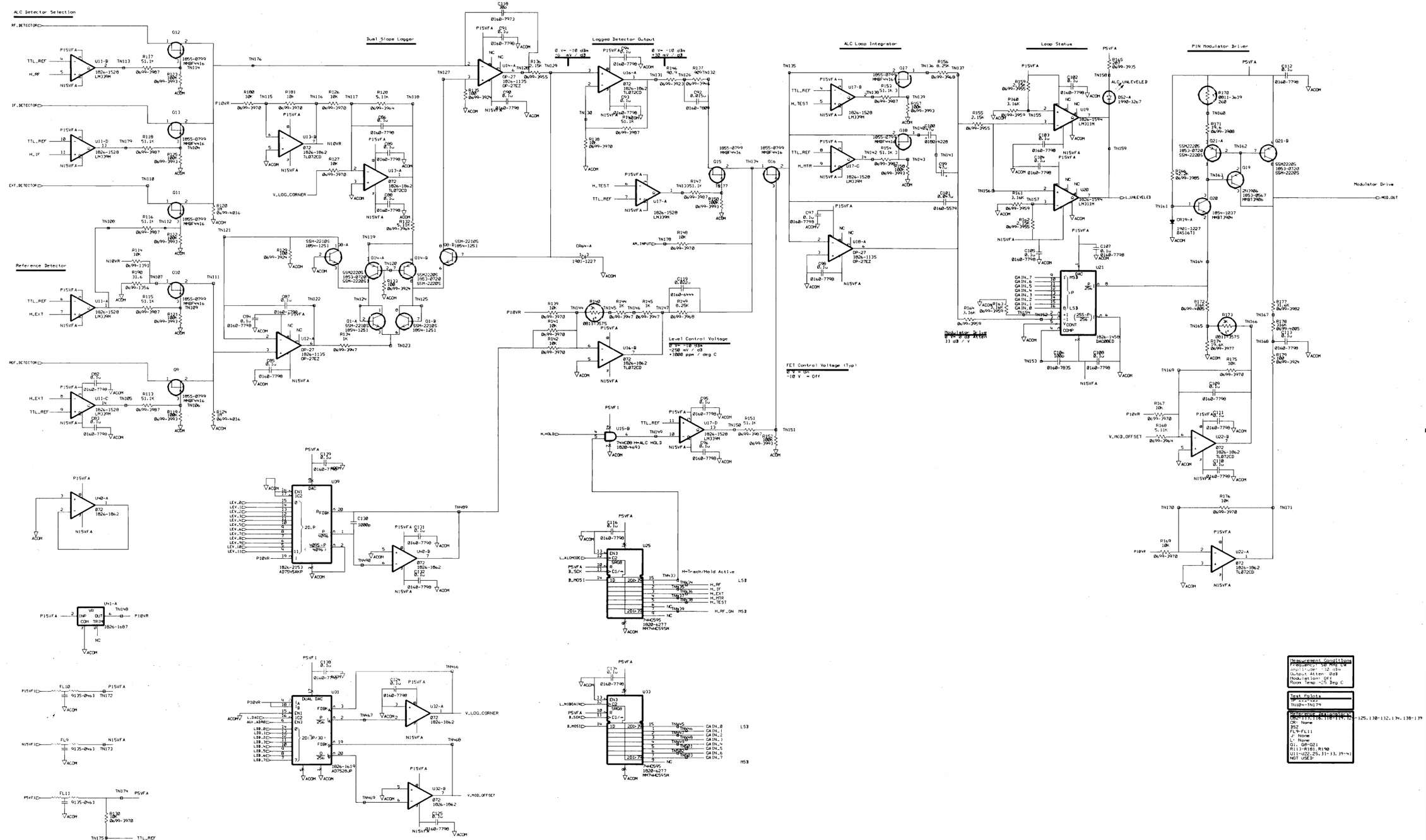

HP PROPRIETARY
THIS DOCUMENT CONTAINS CONFIDENTIAL, PROPRIETARY INFORMATION THAT IS HEWLETT-PACKARD (HP) PROPERTY. DO NOT DISCLOSE TO OR DUPLICATE FOR OTHERS EXCEPT AS AUTHORIZED BY HP.

LAST CHECKED	DATE	SCHEMATIC, PWA TRACKING GENERATOR RF BOARD ALC AMPLIFIER	HEWLETT PACKARD 5300
ENGINEER	SHEET 1 OF 1	TITLE	
DRAWN BY	SIZE D	HP_DYN01:60004/BA3637/rf_board/alc.sch PATHNAME sheet1	E4401-60004 PART NUMBER
	BA3637 ASSY. REV	A3637 BRD. REV. PAGE 6 OF 11	D-E4401-60004-1 DWG. NO.

REVISIONS
SEE PAGE 1 FOR REVISION HISTORY

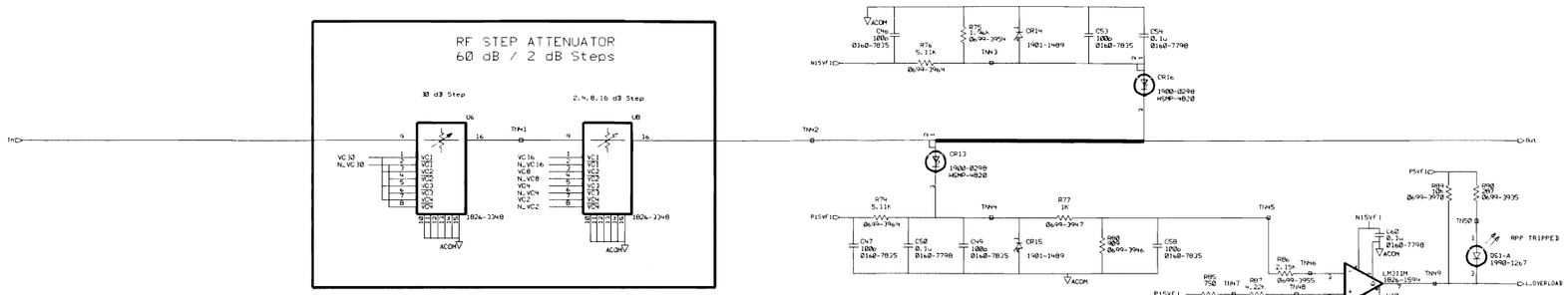

Attenuator Drive Table

L_ATN_x	N_VC_x	VC_x	ATTEN
Hi (+5)	0 V	-5 V	0 dB
Lo (0)	-5 V	0 V	-x dB

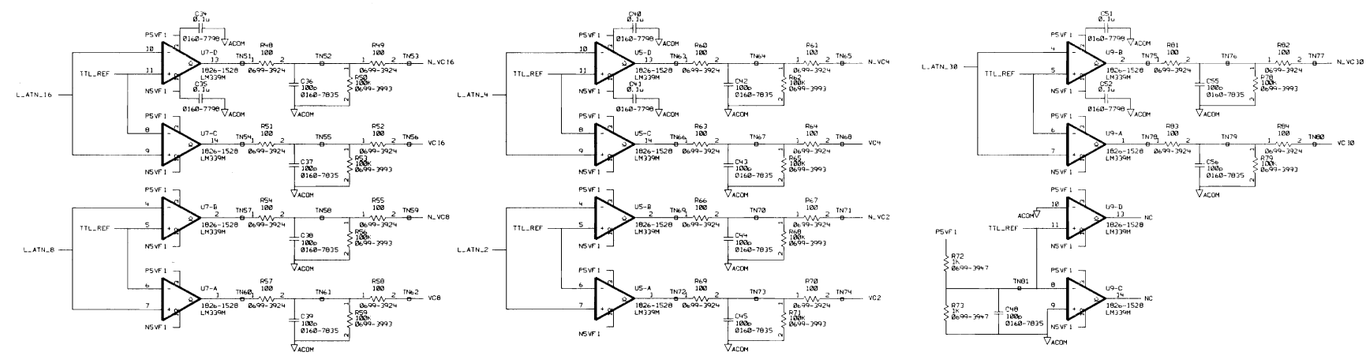

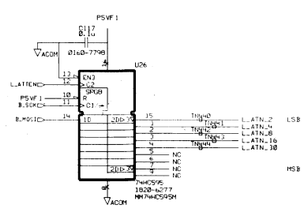

Measurement Conditions
Frequency: 10 MHz CW
Amplitude: -10 dBm
Output Atten: 0dB
Modulation: Off
Room Temp ~25 Deg C

Test Points
TP1-TP4
TN41-TN61

Reference Designators
CR13-CR16
DS1
FL1 None
J1 None
L1 None
Q1 None
R49-R60
U5-U10, U26

HP PROPRIETARY
THIS DOCUMENT CONTAINS CONFIDENTIAL, PROPRIETARY INFORMATION THAT IS HEWLETT-PACKARD (HP) PROPERTY. DO NOT DISCLOSE TO OR DUPLICATE FOR OTHERS EXCEPT AS AUTHORIZED BY HP.

LAST CHECKED	DATE	SCHEMATIC, FWA TRACKING GENERATOR RF BOARD RF ATTEN/LIMITER	HEWLETT PACKARD 5100
ENGINEER	SHEET 1 OF 1	TITLE	E4401-60004
DRAWN BY	SIZE D	PATHNAME: HP_E4401/60004/BA3637/rf_board/step_atten.sheet1	PART NUMBER
	BA3637 ASSY. REV	A3637 MFG. REV	8 PAGE 11 OF	D-E4401-60004-1 DWG. NO.

REVISIONS
SEE PAGE 1 FOR REVISION HISTORY

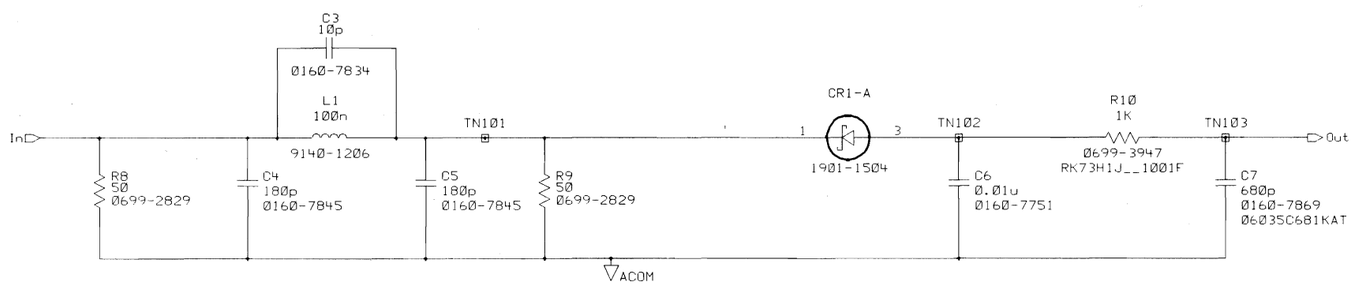

Measurement Conditions
Frequency: 50 MHz CW
Amplitude: -10 dBm
Output Atten: 0dB
Modulation: Off
Room Temp ~25 Deg C

Test Points
TP xxx-xxx
TN101-TN103

Reference Designators:
C3-C7
CR1
DS: None
FL: None
J: None
L1
Q: None
R9-R10
U: None

HP PROPRIETARY
THIS DOCUMENT CONTAINS CONFIDENTIAL. PROPRIETARY INFORMATION THAT IS HEWLETT-PACKARD (HP) PROPERTY. DO NOT DISCLOSE TO OR DUPLICATE FOR OTHERS EXCEPT AS AUTHORIZED BY HP.

LAST CHECKED	DATE	SCHEMATIC. PWA TRACKING GENERATOR RF BOARD ALC REFERENCE	HEWLETT PACKARD 5300
ENGINEER	SHEET 1 OF 1	TITLE	
DRAWN BY	SIZE B	$HP_E4401/60004/BA3637/rf_board/ref_det PATHNAME sheet1	E4401-60004 PART NUMBER
	BA3637 ASSY. REV	A3637 BRD. REV	9 OF 11 PAGE
			B-E4401-60004-1 DWG. NO.

REVISIONS
SEE PAGE 1 FOR REVISION HISTORY

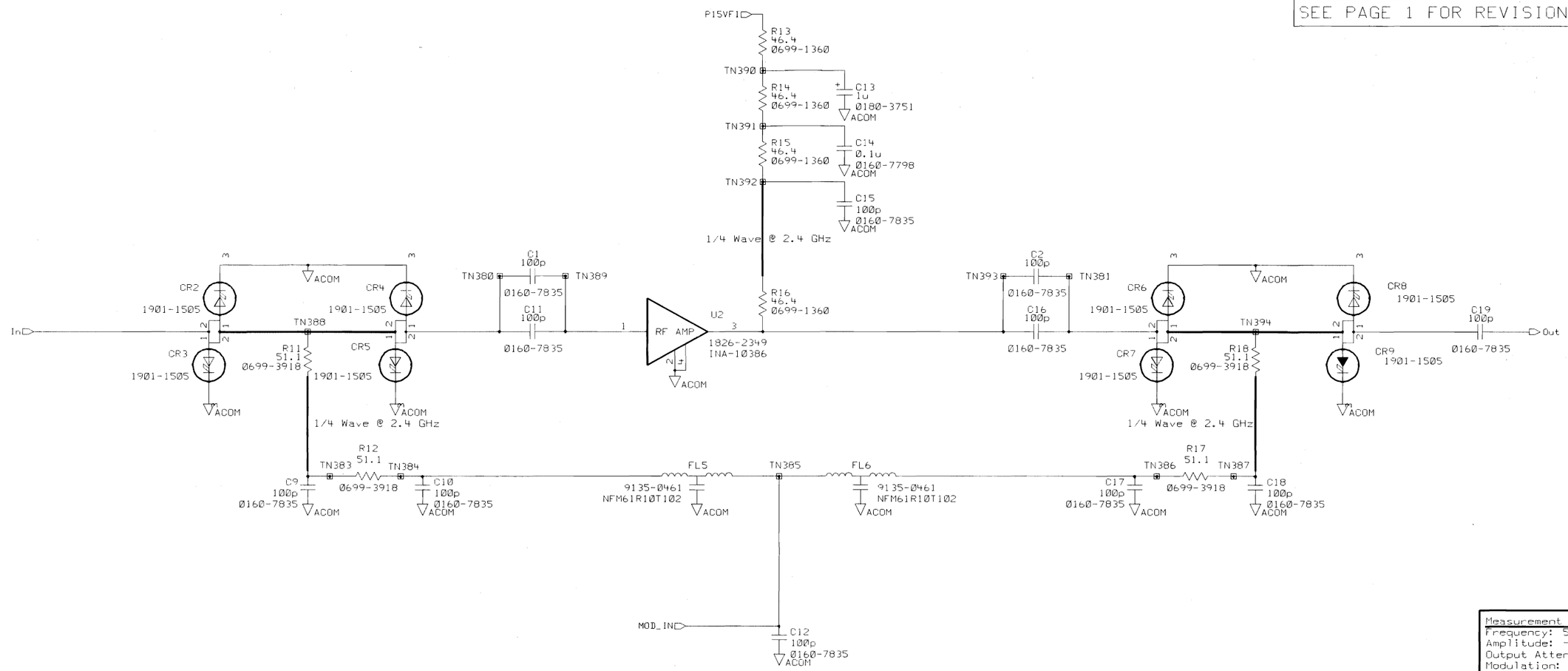

Measurement Conditions
Frequency: 50 MHz CW
Amplitude: -10 dBm
Output Atten: 0dB
Modulation: Off
Room Temp ~25 Deg C

Test Points
TP xxx-xxx
TN379-TN394

Reference Designators:
C1-C2,C9-C19
CR2-CR9
DS: None
FL5-FL6
J: None
L: None
Q: None
R11-R18
U2

HP PROPRIETARY
THIS DOCUMENT CONTAINS CONFIDENTIAL. PROPRIETARY INFORMATION THAT IS HEWLETT-PACKARD (HP) PROPERTY. DO NOT DISCLOSE TO OR DUPLICATE FOR OTHERS EXCEPT AS AUTHORIZED BY HP.

LAST CHECKED	DATE	SCHEMATIC. PWA TRACKING GENERATOR RF BOARD AMP MODULATOR TITLE	HEWLETT PACKARD 5300
ENGINEER	SHEET 1 OF 1		
DRAWN BY	SIZE B	$HP_E4401/60004/BA3637/rf_board/modulator sheet1 PATHNAME	E4401-60004 PART NUMBER
	BA3637 ASSY. REV	A3637 BRD. REV PAGE 10 OF 11	B-E4401-60004-1 DWG. NO.

REVISIONS

SEE PAGE 1 FOR REVISION HISTORY

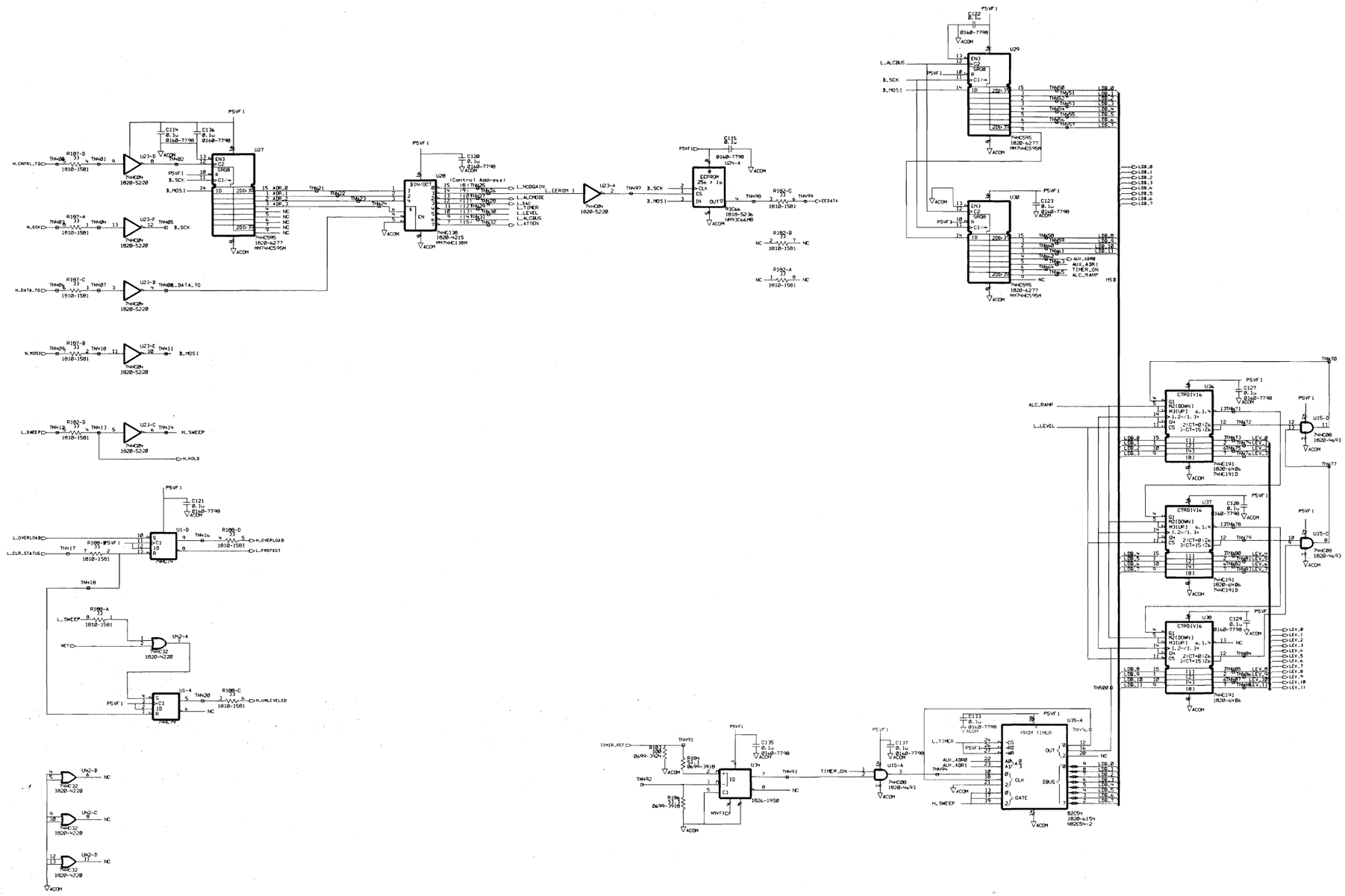
U27
U20
(Control Address)
U29
U30
U34
U35-A
U35-B
U35-C
U35-D
U36
U37
U38
U1-B
U1-A
U2-A
U2-B
U2-C
U2-D
U23-A
U23-B
U23-C
U23-D
U23-E
U23-F
U24-A
U24-B
U24-C
U24-D
U24-E
U24-F
U24-G
U24-H
U24-I
U24-J
U24-K
U24-L
U24-M
U24-N
U24-O
U24-P
U24-Q
U24-R
U24-S
U24-T
U24-U
U24-V
U24-W
U24-X
U24-Y
U24-Z
U24-AA
U24-AB
U24-AC
U24-AD
U24-AE
U24-AF
U24-AG
U24-AH
U24-AI
U24-AJ
U24-AK
U24-AL
U24-AM
U24-AN
U24-AO
U24-AP
U24-AQ
U24-AR
U24-AS
U24-AT
U24-AU
U24-AV
U24-AW
U24-AX
U24-AY
U24-AZ
U24-BA
U24-BB
U24-BC
U24-BD
U24-BE
U24-BF
U24-BG
U24-BH
U24-BI
U24-BJ
U24-BK
U24-BL
U24-BM
U24-BN
U24-BO
U24-BP
U24-BQ
U24-BR
U24-BS
U24-BT
U24-BU
U24-BV
U24-BW
U24-BX
U24-BY
U24-BZ
U24-CA
U24-CB
U24-CC
U24-CD
U24-CE
U24-CF
U24-CG
U24-CH
U24-CI
U24-CJ
U24-CK
U24-CL
U24-CM
U24-CN
U24-CO
U24-CP
U24-CQ
U24-CR
U24-CS
U24-CT
U24-CU
U24-CV
U24-CW
U24-CX
U24-CY
U24-CZ
U24-DA
U24-DB
U24-DC
U24-DD
U24-DE
U24-DF
U24-DG
U24-DH
U24-DI
U24-DJ
U24-DK
U24-DL
U24-DM
U24-DN
U24-DO
U24-DP
U24-DQ
U24-DR
U24-DS
U24-DT
U24-DU
U24-DV
U24-DW
U24-DX
U24-DY
U24-DZ
U24-EA
U24-EB
U24-EC
U24-ED
U24-EE
U24-EF
U24-EG
U24-EH
U24-EI
U24-EJ
U24-EK
U24-EL
U24-EM
U24-EN
U24-EO
U24-EP
U24-EQ
U24-ER
U24-ES
U24-ET
U24-EU
U24-EV
U24-EW
U24-EX
U24-EY
U24-EZ
U24-FA
U24-FB
U24-FC
U24-FD
U24-FE
U24-FF
U24-FG
U24-FH
U24-FI
U24-FJ
U24-FK
U24-FL
U24-FM
U24-FN
U24-FO
U24-FP
U24-FQ
U24-FR
U24-FS
U24-FT
U24-FU
U24-FV
U24-FW
U24-FX
U24-FY
U24-FZ
U24-GA
U24-GB
U24-GC
U24-GD
U24-GE
U24-GF
U24-GG
U24-GH
U24-GI
U24-GJ
U24-GK
U24-GL
U24-GM
U24-GN
U24-GO
U24-GP
U24-GQ
U24-GR
U24-GS
U24-GT
U24-GU
U24-GV
U24-GW
U24-GX
U24-GY
U24-GZ
U24-HA
U24-HB
U24-HC
U24-HD
U24-HE
U24-HF
U24-HG
U24-HH
U24-HI
U24-HJ
U24-HK
U24-HL
U24-HM
U24-HN
U24-HO
U24-HP
U24-HQ
U24-HR
U24-HS
U24-HT
U24-HU
U24-HV
U24-HW
U24-HX
U24-HY
U24-HZ
U24-IA
U24-IB
U24-IC
U24-ID
U24-IE
U24-IF
U24-IG
U24-IH
U24-II
U24-IJ
U24-IK
U24-IL
U24-IM
U24-IN
U24-IO
U24-IP
U24-IQ
U24-IR
U24-IS
U24-IT
U24-IU
U24-IV
U24-IW
U24-IX
U24-IY
U24-IZ
U24-JA
U24-JB
U24-JC
U24-JD
U24-JE
U24-JF
U24-JG
U24-JH
U24-JI
U24-JJ
U24-JK
U24-JL
U24-JM
U24-JN
U24-JO
U24-JP
U24-JQ
U24-JR
U24-JS
U24-JT
U24-JU
U24-JV
U24-JW
U24-JX
U24-JY
U24-JZ
U24-KA
U24-KB
U24-KC
U24-KD
U24-KE
U24-KF
U24-KG
U24-KH
U24-KI
U24-KJ
U24-KK
U24-KL
U24-KM
U24-KN
U24-KO
U24-KP
U24-KQ
U24-KR
U24-KS
U24-KT
U24-KU
U24-KV
U24-KW
U24-KX
U24-KY
U24-KZ
U24-LA
U24-LB
U24-LC
U24-LD
U24-LE
U24-LF
U24-LG
U24-LH
U24-LI
U24-LJ
U24-LK
U24-LL
U24-LM
U24-LN
U24-LO
U24-LP
U24-LQ
U24-LR
U24-LS
U24-LT
U24-LU
U24-LV
U24-LW
U24-LX
U24-LY
U24-LZ
U24-MA
U24-MB
U24-MC
U24-MD
U24-ME
U24-MF
U24-MG
U24-MH
U24-MI
U24-MJ
U24-MK
U24-ML
U24-MM
U24-MN
U24-MO
U24-MP
U24-MQ
U24-MR
U24-MS
U24-MT
U24-MU
U24-MV
U24-MW
U24-MX
U24-MY
U24-MZ
U24-NA
U24-NB
U24-NC
U24-ND
U24-NE
U24-NF
U24-NG
U24-NH
U24-NI
U24-NJ
U24-NK
U24-NL
U24-NM
U24-NN
U24-NO
U24-NP
U24-NQ
U24-NR
U24-NS
U24-NT
U24-NU
U24-NV
U24-NW
U24-NX
U24-NY
U24-NZ
U24-OA
U24-OB
U24-OC
U24-OD
U24-OE
U24-OF
U24-OG
U24-OH
U24-OI
U24-OJ
U24-OK
U24-OL
U24-OM
U24-ON
U24-OO
U24-OP
U24-OQ
U24-OR
U24-OS
U24-OT
U24-OU
U24-OV
U24-OW
U24-OX
U24-OY
U24-OZ
U24-PA
U24-PB
U24-PC
U24-PD
U24-PE
U24-PF
U24-PG
U24-PH
U24-PI
U24-PJ
U24-PK
U24-PL
U24-PM
U24-PN
U24-PO
U24-PP
U24-PQ
U24-PR
U24-PS
U24-PT
U24-PU
U24-PV
U24-PW
U24-PX
U24-PY
U24-PZ
U24-QA
U24-QB
U24-QC
U24-QD
U24-QE
U24-QF
U24-QG
U24-QH
U24-QI
U24-QJ
U24-QK
U24-QL
U24-QM
U24-QN
U24-QO
U24-QP
U24-QQ
U24-QR
U24-QS
U24-QT
U24-QU
U24-QV
U24-QW
U24-QX
U24-QY
U24-QZ
U24-RA
U24-RB
U24-RC
U24-RD
U24-RE
U24-RF
U24-RG
U24-RH
U24-RI
U24-RJ
U24-RK
U24-RL
U24-RM
U24-RN
U24-RO
U24-RP
U24-RQ
U24-RR
U24-RS
U24-RT
U24-RU
U24-RV
U24-RW
U24-RX
U24-RY
U24-RZ
U24-SA
U24-SB
U24-SC
U24-SD
U24-SE
U24-SF
U24-SG
U24-SH
U24-SI
U24-SJ
U24-SK
U24-SL
U24-SM
U24-SN
U24-SO
U24-SP
U24-SQ
U24-SR
U24-SS
U24-ST
U24-SU
U24-SV
U24-SW
U24-SX
U24-SY
U24-SZ
U24-TA
U24-TB
U24-TC
U24-TD
U24-TE
U24-TF
U24-TG
U24-TH
U24-TI
U24-TJ
U24-TK
U24-TL
U24-TM
U24-TN
U24-TO
U24-TP
U24-TQ
U24-TR
U24-TS
U24-TT
U24-TU
U24-TV
U24-TW
U24-TX
U24-TY
U24-TZ
U24-UA
U24-UB
U24-UC
U24-UD
U24-UE
U24-UF
U24-UG
U24-UH
U24-UI
U24-UJ
U24-UK
U24-UL
U24-UM
U24-UN
U24-UO
U24-UP
U24-UQ
U24-UR
U24-US
U24-UT
U24-UU
U24-UV
U24-UW
U24-UX
U24-UY
U24-UZ
U24-VA
U24-VB
U24-VC
U24-VD
U24-VE
U24-VF
U24-VG
U24-VH
U24-VI
U24-VJ
U24-VK
U24-VL
U24-VM
U24-VN
U24-VO
U24-VP
U24-VQ
U24-VR
U24-VS
U24-VT
U24-VU
U24-VV
U24-VW
U24-VX
U24-VY
U24-VZ
U24-WA
U24-WB
U24-WC
U24-WD
U24-WE
U24-WF
U24-WG
U24-WH
U24-WI
U24-WJ
U24-WK
U24-WL
U24-WM
U24-WN
U24-WO
U24-WP
U24-WQ
U24-WR
U24-WS
U24-WT
U24-WU
U24-WV
U24-WW
U24-WX
U24-WY
U24-WZ
U24-XA
U24-XB
U24-XC
U24-XD
U24-XE
U24-XF
U24-XG
U24-XH
U24-XI
U24-XJ
U24-XK
U24-XL
U24-XM
U24-XN
U24-XO
U24-XP
U24-XQ
U24-XR
U24-XS
U24-XT
U24-XU
U24-XV
U24-XW
U24-XX
U24-XY
U24-XZ
U24-YA
U24-YB
U24-YC
U24-YD
U24-YE
U24-YF
U24-YG
U24-YH
U24-YI
U24-YJ
U24-YK
U24-YL
U24-YM
U24-YN
U24-YO
U24-YP
U24-YQ
U24-YR
U24-YS
U24-YT
U24-YU
U24-YV
U24-YW
U24-YX
U24-YY
U24-YZ
U24-ZA
U24-ZB
U24-ZC
U24-ZD
U24-ZE
U24-ZF
U24-ZG
U24-ZH
U24-ZI
U24-ZJ
U24-ZK
U24-ZL
U24-ZM
U24-ZN
U24-ZO
U24-ZP
U24-ZQ
U24-ZR
U24-ZS
U24-ZT
U24-ZU
U24-ZV
U24-ZW
U24-ZX
U24-ZY
U24-ZZ

Component-Level Information Packet for E4402-60004

1.5 GHz Tracking Generator RF (75 Ohm)

Agilent Technologies

Agilent Part Number: E4402-90021
Printed in Malaysia April 2001

Notice

The information contained in this document is subject to change without notice. Agilent Technologies makes no warranty of any kind with regard to this material, including but not limited to, the implied warranties of merchantability and fitness for a particular purpose. Agilent Technologies shall not be liable for errors contained herein or for incidental or consequential damages in connection with the furnishing, performance, or use of this material.

© Copyright Agilent Technologies Inc. 2000, 2001
All Rights Reserved. Reproduction, adaptation, or translation without prior written permission is prohibited, except as allowed under the copyright laws.

Agilent Part Number E4402-60004
1.5 GHz Tracking Generator RF (75 Ohm)

Reference Designator	HP Part Number	Qty	Description	Mgr Code	Mfr Part Number
C1	0160-7835	1	CAP-FXD 100pF +-5% 50 V CER C0G	02010	06035A101JAT
C2	0160-7835	1	CAP-FXD 100pF +-5% 50 V CER C0G	02010	06035A101JAT
C3	0160-7834	1	CAP-FXD 10pF +-5% 50 V CER C0G	02010	06035A100JAT
C4	0160-7845	1	CAP-FXD 180pF +-5% 50 V CER C0G	02010	06035A181JAT
C5	0160-7845	1	CAP-FXD 180pF +-5% 50 V CER C0G	02010	06035A181JAT
C6	0160-7751	1	CAP-FXD 0.01uF +-10% 50 V CER X7R	02010	06035C103KAT
C7	0160-7869	1	CAP-FXD 680pF +-10% 50 V CER X7R	02010	06035C681KAT
C8	0160-7842	1	CAP-FXD 150pF +-5% 50 V CER C0G	02010	06035A151JAT
C9	0160-7835	1	CAP-FXD 100pF +-5% 50 V CER C0G	02010	06035A101JAT
C10	0160-7835	1	CAP-FXD 100pF +-5% 50 V CER C0G	02010	06035A101JAT
C11	0160-7835	1	CAP-FXD 100pF +-5% 50 V CER C0G	02010	06035A101JAT
C12	0160-7835	1	CAP-FXD 100pF +-5% 50 V CER C0G	02010	06035A101JAT
C13	0180-3751	1	CAP-FXD 1uF +-20% 35 V TA	02010	TAJB105M035
C14	0160-7798	1	CAP-FXD 0.1uF +-10% 50 V CER X7R	06352	C2012X7R1H104K
C15	0160-7835	1	CAP-FXD 100pF +-5% 50 V CER C0G	02010	06035A101JAT
C16	0160-7835	1	CAP-FXD 100pF +-5% 50 V CER C0G	02010	06035A101JAT
C17	0160-7835	1	CAP-FXD 100pF +-5% 50 V CER C0G	02010	06035A101JAT
C18	0160-7835	1	CAP-FXD 100pF +-5% 50 V CER C0G	02010	06035A101JAT
C19	0160-7835	1	CAP-FXD 100pF +-5% 50 V CER C0G	02010	06035A101JAT
C20	0160-7835	1	CAP-FXD 100pF +-5% 50 V CER C0G	02010	06035A101JAT
C21	0160-7835	1	CAP-FXD 100pF +-5% 50 V CER C0G	02010	06035A101JAT
C22	0160-6407	1	CAP-FXD 1uF +-5% 25 V CER X7R	02010	22253C105JATA
C23	0160-6407	1	CAP-FXD 1uF +-5% 25 V CER X7R	02010	22253C105JATA
C24	0180-3751	1	CAP-FXD 1uF +-20% 35 V TA	02010	TAJB105M035
C25	0160-7835	1	CAP-FXD 100pF +-5% 50 V CER C0G	02010	06035A101JAT
C26	0160-7841	1	CAP-FXD 15pF +-5% 50 V CER C0G	02010	06035A150JAT
C27	0160-6222	1	CAP-FXD 0.1uF +-10% 50 V CER X7R	02010	12105C104KATA
C28	0180-3751	1	CAP-FXD 1uF +-20% 35 V TA	02010	TAJB105M035

Agilent Part Number E4402-60004
1.5 GHz Tracking Generator RF (75 Ohm)

Reference Designator	HP Part Number	Qty	Description	Mgr Code	Mfr Part Number
C29	0160-7835	1	CAP-FXD 100pF +-5% 50 V CER C0G	02010	06035A101JAT
C30	0160-7798	1	CAP-FXD 0.1uF +-10% 50 V CER X7R	06352	C2012X7R1H104K
C31	0160-6407	1	CAP-FXD 1uF +-5% 25 V CER X7R	02010	22253C105JATA
C32	0160-7869	1	CAP-FXD 680pF +-10% 50 V CER X7R	02010	06035C681KAT
C33	0160-7869	1	CAP-FXD 680pF +-10% 50 V CER X7R	02010	06035C681KAT
C34	0160-7798	1	CAP-FXD 0.1uF +-10% 50 V CER X7R	06352	C2012X7R1H104K
C35	0160-7798	1	CAP-FXD 0.1uF +-10% 50 V CER X7R	06352	C2012X7R1H104K
C36	0160-7835	1	CAP-FXD 100pF +-5% 50 V CER C0G	02010	06035A101JAT
C37	0160-7835	1	CAP-FXD 100pF +-5% 50 V CER C0G	02010	06035A101JAT
C38	0160-7835	1	CAP-FXD 100pF +-5% 50 V CER C0G	02010	06035A101JAT
C39	0160-7835	1	CAP-FXD 100pF +-5% 50 V CER C0G	02010	06035A101JAT
C40	0160-7798	1	CAP-FXD 0.1uF +-10% 50 V CER X7R	06352	C2012X7R1H104K
C41	0160-7798	1	CAP-FXD 0.1uF +-10% 50 V CER X7R	06352	C2012X7R1H104K
C42	0160-7835	1	CAP-FXD 100pF +-5% 50 V CER C0G	02010	06035A101JAT
C43	0160-7835	1	CAP-FXD 100pF +-5% 50 V CER C0G	02010	06035A101JAT
C44	0160-7835	1	CAP-FXD 100pF +-5% 50 V CER C0G	02010	06035A101JAT
C45	0160-7835	1	CAP-FXD 100pF +-5% 50 V CER C0G	02010	06035A101JAT
C46	0160-7835	1	CAP-FXD 100pF +-5% 50 V CER C0G	02010	06035A101JAT
C47	0160-7835	1	CAP-FXD 100pF +-5% 50 V CER C0G	02010	06035A101JAT
C48	0160-7835	1	CAP-FXD 100pF +-5% 50 V CER C0G	02010	06035A101JAT
C49	0160-7835	1	CAP-FXD 100pF +-5% 50 V CER C0G	02010	06035A101JAT
C50	0160-7798	1	CAP-FXD 0.1uF +-10% 50 V CER X7R	06352	C2012X7R1H104K
C51	0160-7798	1	CAP-FXD 0.1uF +-10% 50 V CER X7R	06352	C2012X7R1H104K
C52	0160-7798	1	CAP-FXD 0.1uF +-10% 50 V CER X7R	06352	C2012X7R1H104K
C53	0160-7835	1	CAP-FXD 100pF +-5% 50 V CER C0G	02010	06035A101JAT
C54	0160-7798	1	CAP-FXD 0.1uF +-10% 50 V CER X7R	06352	C2012X7R1H104K
C55	0160-7835	1	CAP-FXD 100pF +-5% 50 V CER C0G	02010	06035A101JAT
C56	0160-7835	1	CAP-FXD 100pF +-5% 50 V CER C0G	02010	06035A101JAT
C58	0160-7835	1	CAP-FXD 100pF +-5% 50 V CER C0G	02010	06035A101JAT
C59	0160-7986	1	CAP-FXD 390pF +-5% 50 V CER C0G	06352	C1608COG1H391J

 **Indicates factory-selected value*

Agilent Part Number E4402-60004
1.5 GHz Tracking Generator RF (75 Ohm)

Reference Designator	HP Part Number	Qty	Description	Mgr Code	Mfr Part Number
C60	0160-7798	1	CAP-FXD 0.1uF +-10% 50 V CER X7R	06352	C2012X7R1H104K
C61	0160-7798	1	CAP-FXD 0.1uF +-10% 50 V CER X7R	06352	C2012X7R1H104K
C62	0160-7798	1	CAP-FXD 0.1uF +-10% 50 V CER X7R	06352	C2012X7R1H104K
C63	0160-7751	1	CAP-FXD 0.01uF +-10% 50 V CER X7R	02010	06035C103KAT
C64	0160-7751	1	CAP-FXD 0.01uF +-10% 50 V CER X7R	02010	06035C103KAT
C65	0160-7748	1	CAP-FXD 1000pF +-10% 50 V CER X7R	02010	06035C102KAT
C66	0160-7835	1	CAP-FXD 100pF +-5% 50 V CER C0G	02010	06035A101JAT
C67	0160-7835	1	CAP-FXD 100pF +-5% 50 V CER C0G	02010	06035A101JAT
C68	0160-7835	1	CAP-FXD 100pF +-5% 50 V CER C0G	02010	06035A101JAT
C69	0160-7798	1	CAP-FXD 0.1uF +-10% 50 V CER X7R	06352	C2012X7R1H104K
C70	0160-7751	1	CAP-FXD 0.01uF +-10% 50 V CER X7R	02010	06035C103KAT
C71	0160-7835	1	CAP-FXD 100pF +-5% 50 V CER C0G	02010	06035A101JAT
C72	0160-7835	1	CAP-FXD 100pF +-5% 50 V CER C0G	02010	06035A101JAT
C73	0160-7748	1	CAP-FXD 1000pF +-10% 50 V CER X7R	02010	06035C102KAT
C74	0160-7798	1	CAP-FXD 0.1uF +-10% 50 V CER X7R	06352	C2012X7R1H104K
C75	0160-7835	1	CAP-FXD 100pF +-5% 50 V CER C0G	02010	06035A101JAT
C76	0160-7751	1	CAP-FXD 0.01uF +-10% 50 V CER X7R	02010	06035C103KAT
C77	0160-7835	1	CAP-FXD 100pF +-5% 50 V CER C0G	02010	06035A101JAT
C78	0160-7835	1	CAP-FXD 100pF +-5% 50 V CER C0G	02010	06035A101JAT
C79	0160-7748	1	CAP-FXD 1000pF +-10% 50 V CER X7R	02010	06035C102KAT
C80	0160-7835	1	CAP-FXD 100pF +-5% 50 V CER C0G	02010	06035A101JAT
C81	0160-7835	1	CAP-FXD 100pF +-5% 50 V CER C0G	02010	06035A101JAT
C82	0160-7798	1	CAP-FXD 0.1uF +-10% 50 V CER X7R	06352	C2012X7R1H104K
C83	0160-7798	1	CAP-FXD 0.1uF +-10% 50 V CER X7R	06352	C2012X7R1H104K
C84	0160-7798	1	CAP-FXD 0.1uF +-10% 50 V CER X7R	06352	C2012X7R1H104K
C85	0160-7798	1	CAP-FXD 0.1uF +-10% 50 V CER X7R	06352	C2012X7R1H104K
C86	0160-7798	1	CAP-FXD 0.1uF +-10% 50 V CER X7R	06352	C2012X7R1H104K
C87	0160-7798	1	CAP-FXD 0.1uF +-10% 50 V CER X7R	06352	C2012X7R1H104K
C88	0160-7798	1	CAP-FXD 0.1uF +-10% 50 V CER X7R	06352	C2012X7R1H104K
C89	0160-7798	1	CAP-FXD 0.1uF +-10% 50 V CER X7R	06352	C2012X7R1H104K

Agilent Part Number E4402-60004
1.5 GHz Tracking Generator RF (75 Ohm)

Reference Designator	HP Part Number	Qty	Description	Mgr Code	Mfr Part Number
C90	0160-7798	1	CAP-FXD 0.1uF +-10% 50 V CER X7R	06352	C2012X7R1H104K
C91	0160-7798	1	CAP-FXD 0.1uF +-10% 50 V CER X7R	06352	C2012X7R1H104K
C92	0160-7809	1	CAP-FXD 0.015uF +-10% 50 V CER X7R	12340	C0603C153K5RAC
C93	0160-7798	1	CAP-FXD 0.1uF +-10% 50 V CER X7R	06352	C2012X7R1H104K
C94	0160-7798	1	CAP-FXD 0.1uF +-10% 50 V CER X7R	06352	C2012X7R1H104K
C95	0160-7798	1	CAP-FXD 0.1uF +-10% 50 V CER X7R	06352	C2012X7R1H104K
C96	0160-7798	1	CAP-FXD 0.1uF +-10% 50 V CER X7R	06352	C2012X7R1H104K
C97	0160-7798	1	CAP-FXD 0.1uF +-10% 50 V CER X7R	06352	C2012X7R1H104K
C98	0160-7798	1	CAP-FXD 0.1uF +-10% 50 V CER X7R	06352	C2012X7R1H104K
C99	0180-4228	1	CAP-FXD 47uF +-20% 10 V TA	02010	TAJD476M010
C100	0180-4228	1	CAP-FXD 47uF +-20% 10 V TA	02010	TAJD476M010
C101	0160-5579	1	CAP-FXD 0.047uF +-5% 63 V POLYE-MET	06127	MKS-2
C102	0160-7798	1	CAP-FXD 0.1uF +-10% 50 V CER X7R	06352	C2012X7R1H104K
C103	0160-7798	1	CAP-FXD 0.1uF +-10% 50 V CER X7R	06352	C2012X7R1H104K
C104	0160-7798	1	CAP-FXD 0.1uF +-10% 50 V CER X7R	06352	C2012X7R1H104K
C105	0160-7798	1	CAP-FXD 0.1uF +-10% 50 V CER X7R	06352	C2012X7R1H104K
C106	0160-7835	1	CAP-FXD 100pF +-5% 50 V CER C0G	02010	06035A101JAT
C107	0160-7798	1	CAP-FXD 0.1uF +-10% 50 V CER X7R	06352	C2012X7R1H104K
C108	0160-7798	1	CAP-FXD 0.1uF +-10% 50 V CER X7R	06352	C2012X7R1H104K
C109	0160-7798	1	CAP-FXD 0.1uF +-10% 50 V CER X7R	06352	C2012X7R1H104K
C110	0160-7798	1	CAP-FXD 0.1uF +-10% 50 V CER X7R	06352	C2012X7R1H104K
C111	0160-7798	1	CAP-FXD 0.1uF +-10% 50 V CER X7R	06352	C2012X7R1H104K
C112	0160-7798	1	CAP-FXD 0.1uF +-10% 50 V CER X7R	06352	C2012X7R1H104K
C113	0160-7798	1	CAP-FXD 0.1uF +-10% 50 V CER X7R	06352	C2012X7R1H104K
C114	0160-7798	1	CAP-FXD 0.1uF +-10% 50 V CER X7R	06352	C2012X7R1H104K
C115	0160-7798	1	CAP-FXD 0.1uF +-10% 50 V CER X7R	06352	C2012X7R1H104K
C116	0160-7798	1	CAP-FXD 0.1uF +-10% 50 V CER X7R	06352	C2012X7R1H104K
C117	0160-7798	1	CAP-FXD 0.1uF +-10% 50 V CER X7R	06352	C2012X7R1H104K
C118	0160-7973	1	CAP-FXD 30pF +-5% 50 V CER C0G	02010	06035A300JAT
C119	0160-6444	1	CAP-FXD 0.022uF +-10% 50 V CER X7R	02010	08055C223KAT

 **Indicates factory-selected value*

Agilent Part Number E4402-60004
1.5 GHz Tracking Generator RF (75 Ohm)

Reference Designator	HP Part Number	Qty	Description	Mgr Code	Mfr Part Number
C120	0160-7798	1	CAP-FXD 0.1uF +-10% 50 V CER X7R	06352	C2012X7R1H104K
C121	0160-7798	1	CAP-FXD 0.1uF +-10% 50 V CER X7R	06352	C2012X7R1H104K
C122	0160-7798	1	CAP-FXD 0.1uF +-10% 50 V CER X7R	06352	C2012X7R1H104K
C123	0160-7798	1	CAP-FXD 0.1uF +-10% 50 V CER X7R	06352	C2012X7R1H104K
C124	0160-7798	1	CAP-FXD 0.1uF +-10% 50 V CER X7R	06352	C2012X7R1H104K
C125	0160-7798	1	CAP-FXD 0.1uF +-10% 50 V CER X7R	06352	C2012X7R1H104K
C127	0160-7798	1	CAP-FXD 0.1uF +-10% 50 V CER X7R	06352	C2012X7R1H104K
C128	0160-7798	1	CAP-FXD 0.1uF +-10% 50 V CER X7R	06352	C2012X7R1H104K
C129	0160-7798	1	CAP-FXD 0.1uF +-10% 50 V CER X7R	06352	C2012X7R1H104K
C130	0160-6100	1	CAP-FXD 1000pF +-5% 50 V CER C0G	02010	12065A102JATA
C131	0160-7798	1	CAP-FXD 0.1uF +-10% 50 V CER X7R	06352	C2012X7R1H104K
C132	0160-7798	1	CAP-FXD 0.1uF +-10% 50 V CER X7R	06352	C2012X7R1H104K
C133	0160-7798	1	CAP-FXD 0.1uF +-10% 50 V CER X7R	06352	C2012X7R1H104K
C134	0160-7798	1	CAP-FXD 0.1uF +-10% 50 V CER X7R	06352	C2012X7R1H104K
C135	0160-7798	1	CAP-FXD 0.1uF +-10% 50 V CER X7R	06352	C2012X7R1H104K
C136	0160-7798	1	CAP-FXD 0.1uF +-10% 50 V CER X7R	06352	C2012X7R1H104K
C137	0160-7798	1	CAP-FXD 0.1uF +-10% 50 V CER X7R	06352	C2012X7R1H104K
C138	0160-7798	1	CAP-FXD 0.1uF +-10% 50 V CER X7R	06352	C2012X7R1H104K
C139	0160-7798	1	CAP-FXD 0.1uF +-10% 50 V CER X7R	06352	C2012X7R1H104K
C140	0160-7835	1	CAP-FXD 100pF +-5% 50 V CER C0G	02010	06035A101JAT
C141	0160-7835	1	CAP-FXD 100pF +-5% 50 V CER C0G	02010	06035A101JAT
C142	0160-7835	1	CAP-FXD 100pF +-5% 50 V CER C0G	02010	06035A101JAT
C143	0160-7860	1	CAP-FXD 4.7pF +-5.31% 50 V CER C0G	02010	06035A4R7CAT
C168	0160-7751	1	CAP-FXD 0.01uF +-10% 50 V CER X7R	02010	06035C103KAT
C391	0180-4287	1	CAP-FXD 10uF +-20% 35 V TA	02010	TAJD106M035
C392	0160-7835	1	CAP-FXD 100pF +-5% 50 V CER C0G	02010	06035A101JAT
C393	0180-3751	1	CAP-FXD 1uF +-20% 35 V TA	02010	TAJB105M035
C394	0160-7867	1	CAP-FXD 6.8pF +-3.68% 50 V CER C0G	02010	06035A6R8CAT
C395	0160-7867	1	CAP-FXD 6.8pF +-3.68% 50 V CER C0G	02010	06035A6R8CAT
C396	0160-8216	1	CAP-FXD 8.2pF 50 V MOS	02010	08055J8R2CAW

Agilent Part Number E4402-60004
1.5 GHz Tracking Generator RF (75 Ohm)

Reference Designator	HP Part Number	Qty	Description	Mgr Code	Mfr Part Number
C397	0160-7712	1	CAP-FXD 1500pF +-10% 50 V CER X7R	02010	06035C152KATRA
C398	0160-7835	1	CAP-FXD 100pF +-5% 50 V CER C0G	02010	06035A101JAT
C399	0160-7986	1	CAP-FXD 390pF +-5% 50 V CER C0G	06352	C1608COG1H391J
C400	0160-7986	1	CAP-FXD 390pF +-5% 50 V CER C0G	06352	C1608COG1H391J
C401	0160-7712	1	CAP-FXD 1500pF +-10% 50 V CER X7R	02010	06035C152KATRA
C402	0160-7835	1	CAP-FXD 100pF +-5% 50 V CER C0G	02010	06035A101JAT
C403	0160-7835	1	CAP-FXD 100pF +-5% 50 V CER C0G	02010	06035A101JAT
C404	0160-7835	1	CAP-FXD 100pF +-5% 50 V CER C0G	02010	06035A101JAT
C405	0160-7986	1	CAP-FXD 390pF +-5% 50 V CER C0G	06352	C1608COG1H391J
C406	0160-7986	1	CAP-FXD 390pF +-5% 50 V CER C0G	06352	C1608COG1H391J
C407	0180-4287	1	CAP-FXD 10uF +-20% 35 V TA	02010	TAJD106M035
C408	0160-7835	1	CAP-FXD 100pF +-5% 50 V CER C0G	02010	06035A101JAT
C409	0180-4287	1	CAP-FXD 10uF +-20% 35 V TA	02010	TAJD106M035
C410	0160-7986	1	CAP-FXD 390pF +-5% 50 V CER C0G	06352	C1608COG1H391J
C411	0160-7986	1	CAP-FXD 390pF +-5% 50 V CER C0G	06352	C1608COG1H391J
C412	0160-7986	1	CAP-FXD 390pF +-5% 50 V CER C0G	06352	C1608COG1H391J
C413	0160-7798	1	CAP-FXD 0.1uF +-10% 50 V CER X7R	06352	C2012X7R1H104K
C414	0160-7798	1	CAP-FXD 0.1uF +-10% 50 V CER X7R	06352	C2012X7R1H104K
C415	0160-7986	1	CAP-FXD 390pF +-5% 50 V CER C0G	06352	C1608COG1H391J
C416	0160-7986	1	CAP-FXD 390pF +-5% 50 V CER C0G	06352	C1608COG1H391J
C417	0160-7986	1	CAP-FXD 390pF +-5% 50 V CER C0G	06352	C1608COG1H391J
C418	0160-7986	1	CAP-FXD 390pF +-5% 50 V CER C0G	06352	C1608COG1H391J
C419	0160-7835	1	CAP-FXD 100pF +-5% 50 V CER C0G	02010	06035A101JAT
C420	0160-7751	1	CAP-FXD 0.01uF +-10% 50 V CER X7R	02010	06035C103KAT
C421	0160-7835	1	CAP-FXD 100pF +-5% 50 V CER C0G	02010	06035A101JAT
C422	0160-6104	1	CAP-FXD 2200pF +-5% 50 V CER C0G	02010	12065A222JATRA
C423	0160-7751	1	CAP-FXD 0.01uF +-10% 50 V CER X7R	02010	06035C103KAT
C424	0160-6104	1	CAP-FXD 2200pF +-5% 50 V CER C0G	02010	12065A222JATRA
C425	0160-7861	1	CAP-FXD 47pF +-5% 50 V CER C0G	02010	06035A470JAT
C426	0160-7798	1	CAP-FXD 0.1uF +-10% 50 V CER X7R	06352	C2012X7R1H104K

 **Indicates factory-selected value*

Agilent Part Number E4402-60004
1.5 GHz Tracking Generator RF (75 Ohm)

Reference Designator	HP Part Number	Qty	Description	Mgr Code	Mfr Part Number
C427	0160-7798	1	CAP-FXD 0.1uF +-10% 50 V CER X7R	06352	C2012X7R1H104K
C428	0160-7861	1	CAP-FXD 47pF +-5% 50 V CER C0G	02010	06035A470JAT
C429	0160-7798	1	CAP-FXD 0.1uF +-10% 50 V CER X7R	06352	C2012X7R1H104K
C430	0160-7798	1	CAP-FXD 0.1uF +-10% 50 V CER X7R	06352	C2012X7R1H104K
C431	0160-7798	1	CAP-FXD 0.1uF +-10% 50 V CER X7R	06352	C2012X7R1H104K
C432	0160-7798	1	CAP-FXD 0.1uF +-10% 50 V CER X7R	06352	C2012X7R1H104K
C433	0160-7798	1	CAP-FXD 0.1uF +-10% 50 V CER X7R	06352	C2012X7R1H104K
C434	0160-7798	1	CAP-FXD 0.1uF +-10% 50 V CER X7R	06352	C2012X7R1H104K
C435	0160-7835	1	CAP-FXD 100pF +-5% 50 V CER C0G	02010	06035A101JAT
C436	0160-7835	1	CAP-FXD 100pF +-5% 50 V CER C0G	02010	06035A101JAT
C437	0160-7986	1	CAP-FXD 390pF +-5% 50 V CER C0G	06352	C1608COG1H391J
C438	0160-7798	1	CAP-FXD 0.1uF +-10% 50 V CER X7R	06352	C2012X7R1H104K
C439	0160-7835	1	CAP-FXD 100pF +-5% 50 V CER C0G	02010	06035A101JAT
C440	0160-7751	1	CAP-FXD 0.01uF +-10% 50 V CER X7R	02010	06035C103KAT
C441	0160-7798	1	CAP-FXD 0.1uF +-10% 50 V CER X7R	06352	C2012X7R1H104K
C442	0160-7835	1	CAP-FXD 100pF +-5% 50 V CER C0G	02010	06035A101JAT
C443	0160-7835	1	CAP-FXD 100pF +-5% 50 V CER C0G	02010	06035A101JAT
C444	0160-7798	1	CAP-FXD 0.1uF +-10% 50 V CER X7R	06352	C2012X7R1H104K
C445	0160-7835	1	CAP-FXD 100pF +-5% 50 V CER C0G	02010	06035A101JAT
C446	0160-7835	1	CAP-FXD 100pF +-5% 50 V CER C0G	02010	06035A101JAT
C447	0160-7751	1	CAP-FXD 0.01uF +-10% 50 V CER X7R	02010	06035C103KAT
C449	0160-7798	1	CAP-FXD 0.1uF +-10% 50 V CER X7R	06352	C2012X7R1H104K
C450	0160-7835	1	CAP-FXD 100pF +-5% 50 V CER C0G	02010	06035A101JAT
C451	0160-7835	1	CAP-FXD 100pF +-5% 50 V CER C0G	02010	06035A101JAT
C452	0160-7855	1	CAP-FXD 33pF +-5% 50 V CER C0G	02010	06035A330JAT
C453	0160-7798	1	CAP-FXD 0.1uF +-10% 50 V CER X7R	06352	C2012X7R1H104K
C454	0160-7986	1	CAP-FXD 390pF +-5% 50 V CER C0G	06352	C1608COG1H391J
C455	0180-4287	1	CAP-FXD 10uF +-20% 35 V TA	02010	TAJD106M035
C456	0160-7798	1	CAP-FXD 0.1uF +-10% 50 V CER X7R	06352	C2012X7R1H104K
C457	0180-4287	1	CAP-FXD 10uF +-20% 35 V TA	02010	TAJD106M035

Agilent Part Number E4402-60004
1.5 GHz Tracking Generator RF (75 Ohm)

Reference Designator	HP Part Number	Qty	Description	Mgr Code	Mfr Part Number
C458	0160-7798	1	CAP-FXD 0.1uF +-10% 50 V CER X7R	06352	C2012X7R1H104K
C459	0180-4287	1	CAP-FXD 10uF +-20% 35 V TA	02010	TAJD106M035
C460	0160-7751	1	CAP-FXD 0.01uF +-10% 50 V CER X7R	02010	06035C103KAT
C461	0180-4287	1	CAP-FXD 10uF +-20% 35 V TA	02010	TAJD106M035
C462	0160-7798	1	CAP-FXD 0.1uF +-10% 50 V CER X7R	06352	C2012X7R1H104K
C463	0160-7781	1	CAP-FXD 2200pF +-10% 50 V CER X7R	02010	06035C222KAT
C464	0160-7798	1	CAP-FXD 0.1uF +-10% 50 V CER X7R	06352	C2012X7R1H104K
C465	0160-7798	1	CAP-FXD 0.1uF +-10% 50 V CER X7R	06352	C2012X7R1H104K
C473	0160-7751	1	CAP-FXD 0.01uF +-10% 50 V CER X7R	02010	06035C103KAT
C474	0160-7835	1	CAP-FXD 100pF +-5% 50 V CER C0G	02010	06035A101JAT
C475	0160-7835	1	CAP-FXD 100pF +-5% 50 V CER C0G	02010	06035A101JAT
C476	0160-7835	1	CAP-FXD 100pF +-5% 50 V CER C0G	02010	06035A101JAT
C477	0160-7835	1	CAP-FXD 100pF +-5% 50 V CER C0G	02010	06035A101JAT
C493	0160-7873	1	CAP-FXD 820pF +-10% 50 V CER X7R	02010	06035C821KAT
C494	0160-7873	1	CAP-FXD 820pF +-10% 50 V CER X7R	02010	06035C821KAT
C495	0160-7842	1	CAP-FXD 150pF +-5% 50 V CER C0G	02010	06035A151JAT
CR1	1901-1504	1	DIODE-SCHOTTKY 2V T0-236AB (SOT-23)	37793	HSMS-2850-TR1
CR2	1901-1505	1	DIODE-PIN T0-236AB (SOT-23)	01542	HSMP-4890
CR3	1901-1505	1	DIODE-PIN T0-236AB (SOT-23)	01542	HSMP-4890
CR4	1901-1505	1	DIODE-PIN T0-236AB (SOT-23)	01542	HSMP-4890
CR5	1901-1505	1	DIODE-PIN T0-236AB (SOT-23)	01542	HSMP-4890
CR6	1901-1505	1	DIODE-PIN T0-236AB (SOT-23)	01542	HSMP-4890
CR7	1901-1505	1	DIODE-PIN T0-236AB (SOT-23)	01542	HSMP-4890
CR8	1901-1505	1	DIODE-PIN T0-236AB (SOT-23)	01542	HSMP-4890
CR9	1901-1505	1	DIODE-PIN T0-236AB (SOT-23)	01542	HSMP-4890
CR10	1901-1504	1	DIODE-SCHOTTKY 2V T0-236AB (SOT-23)	37793	HSMS-2850-TR1
CR11	1900-0264	1	DIODE-SCHOTTKY SM SIG	20057	HSMS-2822
CR12	1901-1504	1	DIODE-SCHOTTKY 2V T0-236AB (SOT-23)	37793	HSMS-2850-TR1
CR13	1900-0298	1	DIODE-PIN	01542	HSMP-4820
CR14	1901-1489	1	DIODE-V-SUPPR 10.5V D0-214AA	02688	SMBJ6.0A

 **Indicates factory-selected value*

Agilent Part Number E4402-60004
1.5 GHz Tracking Generator RF (75 Ohm)

Reference Designator	HP Part Number	Qty	Description	Mgr Code	Mfr Part Number
CR15	1901-1489	1	DIODE-V-SUPPR 10.5V D0-214AA	02688	SMBJ6.0A
CR16	1900-0298	1	DIODE-PIN	01542	HSMP-4820
CR18	1902-1542	1	DIODE-ZNR 6.2V 5% TO-236 (SOT-23)	02910	BZX84C6V2
CR19	1901-1227	1	DIODE-SWITCHING 75V 200MA 6NS TO-236	02910	BAS16
CR60	0122-0189	1	DIODE-VVC 2.1PF 14% C 1/C28-MIN7.5	28480	0122-0189
CR61	0122-0189	1	DIODE-VVC 2.1PF 14% C 1/C28-MIN7.5	28480	0122-0189
CR62	1901-1227	1	DIODE-SWITCHING 75V 200MA 6NS TO-236	02910	BAS16
CR63	1900-0309	1	DIODE-SCHOTTKY SM SIG	01542	HSMS-2827
CR64	1901-1227	1	DIODE-SWITCHING 75V 200MA 6NS TO-236	02910	BAS16
DS1	1990-1267	1	LED-LAMP LUM-INT8MCD IF30MA-MAX	14139	AM23ID-F
DS2	1990-1267	1	LED-LAMP LUM-INT8MCD IF30MA-MAX	14139	AM23ID-F
FL1	9135-0461	1	FILTER-SUPPRESSION EMI; SMT; WORKING	09939	NFM61R10T102M0 0-621
FL2	9135-0461	1	FILTER-SUPPRESSION EMI; SMT; WORKING	09939	NFM61R10T102M0 0-621
FL3	9135-0461	1	FILTER-SUPPRESSION EMI; SMT; WORKING	09939	NFM61R10T102M0 0-621
FL4	9135-0461	1	FILTER-SUPPRESSION EMI; SMT; WORKING	09939	NFM61R10T102M0 0-621
FL5	9135-0461	1	FILTER-SUPPRESSION EMI; SMT; WORKING	09939	NFM61R10T102M0 0-621
FL6	9135-0461	1	FILTER-SUPPRESSION EMI; SMT; WORKING	09939	NFM61R10T102M0 0-621
FL7	9135-0461	1	FILTER-SUPPRESSION EMI; SMT; WORKING	09939	NFM61R10T102M0 0-621
FL8	9135-0461	1	FILTER-SUPPRESSION EMI; SMT; WORKING	09939	NFM61R10T102M0 0-621
FL9	9135-0461	1	FILTER-SUPPRESSION EMI; SMT; WORKING	09939	NFM61R10T102M0 0-621
FL10	9135-0461	1	FILTER-SUPPRESSION EMI; SMT; WORKING	09939	NFM61R10T102M0 0-621
FL11	9135-0461	1	FILTER-SUPPRESSION EMI; SMT; WORKING	09939	NFM61R10T102M0 0-621
FL12	9135-0461	1	FILTER-SUPPRESSION EMI; SMT; WORKING	09939	NFM61R10T102M0 0-621

Agilent Part Number E4402-60004
1.5 GHz Tracking Generator RF (75 Ohm)

Reference Designator	HP Part Number	Qty	Description	Mgr Code	Mfr Part Number
FL28	9135-0461	1	FILTER-SUPPRESSION EMI; SMT; WORKING	09939	NFM61R10T102M0 0-621
FL29	9135-0461	1	FILTER-SUPPRESSION EMI; SMT; WORKING	09939	NFM61R10T102M0 0-621
J1	1252-7168	1	CONN-POST TYPE 1-PIN-SPCG-MTG-END	03418	52089-3010
J2	1250-2471	1	CONNECTOR-RF MCX,SM-SNP-ON FEMALE	01380	829558-3
J3	1250-0257	1	CONNECTOR-RF SMB MALE PC-W-STDFS 50-OHM	01380	413990-3
J4	1252-0501	1	CONN-POST TYPE .100-PIN-SPCG-MTG-END	01380	103361-2
L1	9140-1206	1	INDUCTOR 100nH +-5% 2.8W-mmX3.4LG-mm	06352	NL322522T-R10J
L4	9140-1537	1	INDUCTOR 22nH +-10% 2.8W-mmX3.4LG-mm	06352	NL322522T-022K
L5	9140-1537	1	INDUCTOR 22nH +-10% 2.8W-mmX3.4LG-mm	06352	NL322522T-022K
L56	9140-1206	1	INDUCTOR 100nH +-5% 2.8W-mmX3.4LG-mm	06352	NL322522T-R10J
L57	9140-1206	1	INDUCTOR 100nH +-5% 2.8W-mmX3.4LG-mm	06352	NL322522T-R10J
L58	9140-1206	1	INDUCTOR 100nH +-5% 2.8W-mmX3.4LG-mm	06352	NL322522T-R10J
L59	9140-1206	1	INDUCTOR 100nH +-5% 2.8W-mmX3.4LG-mm	06352	NL322522T-R10J
L60	9135-0069	1	INDUCTOR 30nH +-5% 2.6D-mmX6.6LG-mm Q60	03273	10M030X-1
L61	9140-1206	1	INDUCTOR 100nH +-5% 2.8W-mmX3.4LG-mm	06352	NL322522T-R10J
L62	9140-1206	1	INDUCTOR 100nH +-5% 2.8W-mmX3.4LG-mm	06352	NL322522T-R10J
L63	9140-1206	1	INDUCTOR 100nH +-5% 2.8W-mmX3.4LG-mm	06352	NL322522T-R10J
L64	9140-1238	1	INDUCTOR 10uH +-5% 2.8W-mmX3.4LG-mm Q30	06352	NL322522T-100J
L65	9140-1418	1	INDUCTOR 2.7uH +-5% 3.4W-mmX4.8LG-mm	28480	9140-1418
L66	9140-1238	1	INDUCTOR 10uH +-5% 2.8W-mmX3.4LG-mm Q30	06352	NL322522T-100J
L67	9140-1194	1	INDUCTOR 10nH +-10% 2.8W-mmX3.4LG-mm	09891	KL32TE010K
L68	9140-1194	1	INDUCTOR 10nH +-10% 2.8W-mmX3.4LG-mm	09891	KL32TE010K
Q1	1854-1251	1	TRANSISTOR-DUAL NPN	03285	SSM-2210S
Q2	1853-0567	1	TRANSISTOR PNP SI SOT-23 (TO-236AB)	00746	SST3906T116
Q3	1855-0935	1	TRANSISTOR GAAS FET N-CHAN D-MODE	28480	1855-0935
Q4	1853-0567	1	TRANSISTOR PNP SI SOT-23 (TO-236AB)	00746	SST3906T116

 **Indicates factory-selected value*

Agilent Part Number E4402-60004
1.5 GHz Tracking Generator RF (75 Ohm)

Reference Designator	HP Part Number	Qty	Description	Mgr Code	Mfr Part Number
Q5	1855-0935	1	TRANSISTOR GAAS FET N-CHAN D-MODE	28480	1855-0935
Q6	1853-0567	1	TRANSISTOR PNP SI SOT-23 (TO-236AB)	00746	SST3906T116
Q7	1855-0935	1	TRANSISTOR GAAS FET N-CHAN D-MODE	28480	1855-0935
Q8	1854-1251	1	TRANSISTOR-DUAL NPN	03285	SSM-2210S
Q9	1855-0799	1	TRANSISTOR J-FET N-CHAN D-MODE SOT-23	36633	MMBF4416LT1
Q10	1855-0799	1	TRANSISTOR J-FET N-CHAN D-MODE SOT-23	36633	MMBF4416LT1
Q11	1855-0799	1	TRANSISTOR J-FET N-CHAN D-MODE SOT-23	36633	MMBF4416LT1
Q12	1855-0799	1	TRANSISTOR J-FET N-CHAN D-MODE SOT-23	36633	MMBF4416LT1
Q13	1855-0799	1	TRANSISTOR J-FET N-CHAN D-MODE SOT-23	36633	MMBF4416LT1
Q14	1853-0720	1	TRANSISTOR-DUAL PNP PD500MW	03285	SSM-2220S
Q15	1855-0799	1	TRANSISTOR J-FET N-CHAN D-MODE SOT-23	36633	MMBF4416LT1
Q16	1855-0799	1	TRANSISTOR J-FET N-CHAN D-MODE SOT-23	36633	MMBF4416LT1
Q17	1855-0799	1	TRANSISTOR J-FET N-CHAN D-MODE SOT-23	36633	MMBF4416LT1
Q18	1855-0799	1	TRANSISTOR J-FET N-CHAN D-MODE SOT-23	36633	MMBF4416LT1
Q19	1853-0567	1	TRANSISTOR PNP SI SOT-23 (TO-236AB)	00746	SST3906T116
Q20	1854-1037	1	TRANSISTOR NPN SI TO-236AA PD350MW	00746	SST3904T116
Q21	1853-0720	1	TRANSISTOR-DUAL PNP PD500MW	03285	SSM-2220S
Q27	1854-1270	1	TRANSISTOR NPN SI TO-261AA (SOT-223)	02910	PZT2222A
Q28	1854-1037	1	TRANSISTOR NPN SI TO-236AA PD350MW	00746	SST3904T116
Q44	1854-1037	1	TRANSISTOR NPN SI TO-236AA PD350MW	00746	SST3904T116
Q65	1853-0567	1	TRANSISTOR PNP SI SOT-23 (TO-236AB)	00746	SST3906T116
Q66	1853-0567	1	TRANSISTOR PNP SI SOT-23 (TO-236AB)	00746	SST3906T116
Q67	1854-1270	1	TRANSISTOR NPN SI TO-261AA (SOT-223)	02910	PZT2222A
Q68	1853-0568	1	TRANSISTOR PNP SI TO-236AA PD350MW	36633	MMBT5087LT1
Q69	1854-1298	1	TRANSISTOR NPN SI PD500MW	01542	AT-41486
Q70	1853-0580	1	TRANSISTOR PNP SI SOT-23 (TO-236AB)	00746	SST4403
Q71	1854-1037	1	TRANSISTOR NPN SI TO-236AA PD350MW	00746	SST3904T116
Q72	1854-1083	1	TRANSISTOR NPN SI SOT-23 (TO-236AB)	11699	CMPT5179
Q73	1854-1270	1	TRANSISTOR NPN SI TO-261AA (SOT-223)	02910	PZT2222A
R1	0699-3970	1	RESISTOR 10K +-1% .063W TKF TC0+-200	09891	RK73H1J1002F

Agilent Part Number E4402-60004
1.5 GHz Tracking Generator RF (75 Ohm)

Reference Designator	HP Part Number	Qty	Description	Mgr Code	Mfr Part Number
R2	0699-3960	1	RESISTOR 3.48K +-1% .063W TKF TC0+-200	09891	RK73H1J3481F
R3	0699-3960	1	RESISTOR 3.48K +-1% .063W TKF TC0+-200	09891	RK73H1J3481F
R4	0699-3960	1	RESISTOR 3.48K +-1% .063W TKF TC0+-200	09891	RK73H1J3481F
R5	0699-3932	1	RESISTOR 215 +-1% .063W TKF TC0+-200	00746	MCR03-F-2150
R6	0699-3932	1	RESISTOR 215 +-1% .063W TKF TC0+-200	00746	MCR03-F-2150
R7	0699-3932	1	RESISTOR 215 +-1% .063W TKF TC0+-200	00746	MCR03-F-2150
R8	0699-2829	1	RESISTOR 50 +-0.1% .125W TF TC0+-25	02499	W1206R030500BT
R9	0699-2829	1	RESISTOR 50 +-0.1% .125W TF TC0+-25	02499	W1206R030500BT
R10	0699-3947	1	RESISTOR 1K +-1% .063W TKF TC0+-200	00746	MCR03-F-1001
R11	0699-3918	1	RESISTOR 51.1 +-1% .063W TKF TC0+-200	00746	MCR03-F-51R1
R12	0699-3918	1	RESISTOR 51.1 +-1% .063W TKF TC0+-200	00746	MCR03-F-51R1
R13	0699-1360	1	RESISTOR 46.4 +-1% .125W TKF TC0+-100	05524	CRCW120646R4F
R14	0699-1360	1	RESISTOR 46.4 +-1% .125W TKF TC0+-100	05524	CRCW120646R4F
R15	0699-1360	1	RESISTOR 46.4 +-1% .125W TKF TC0+-100	05524	CRCW120646R4F
R16	0699-1360	1	RESISTOR 46.4 +-1% .125W TKF TC0+-100	05524	CRCW120646R4F
R17	0699-3918	1	RESISTOR 51.1 +-1% .063W TKF TC0+-200	00746	MCR03-F-51R1
R18	0699-3918	1	RESISTOR 51.1 +-1% .063W TKF TC0+-200	00746	MCR03-F-51R1
R19	0699-3924	1	RESISTOR 100 +-1% .063W TKF TC0+-200	00746	MCR03-F-1000
R20	0699-3924	1	RESISTOR 100 +-1% .063W TKF TC0+-200	00746	MCR03-F-1000
R21	0699-3947	1	RESISTOR 1K +-1% .063W TKF TC0+-200	00746	MCR03-F-1001
R22	0699-3924	1	RESISTOR 100 +-1% .063W TKF TC0+-200	00746	MCR03-F-1000
R23	0699-3924	1	RESISTOR 100 +-1% .063W TKF TC0+-200	00746	MCR03-F-1000
R24	0699-3924	1	RESISTOR 100 +-1% .063W TKF TC0+-200	00746	MCR03-F-1000
R25	0699-3924	1	RESISTOR 100 +-1% .063W TKF TC0+-200	00746	MCR03-F-1000
R26	0699-3924	1	RESISTOR 100 +-1% .063W TKF TC0+-200	00746	MCR03-F-1000
R27	0699-3924	1	RESISTOR 100 +-1% .063W TKF TC0+-200	00746	MCR03-F-1000
R28	0699-3902	1	RESISTOR 11 +-1% .063W TKF TC0+-200	09891	RK73H1J11R0F
R29	0699-3939	1	RESISTOR 422 +-1% .063W TKF TC0+-200	09891	RK73H1J4220F
R30	0699-3939	1	RESISTOR 422 +-1% .063W TKF TC0+-200	09891	RK73H1J4220F
R31	0699-3918	1	RESISTOR 51.1 +-1% .063W TKF TC0+-200	00746	MCR03-F-51R1

 **Indicates factory-selected value*

Agilent Part Number E4402-60004
1.5 GHz Tracking Generator RF (75 Ohm)

Reference Designator	HP Part Number	Qty	Description	Mgr Code	Mfr Part Number
R32	0699-3932	1	RESISTOR 215 +-1% .063W TKF TC0+-200	00746	MCR03-F-2150
R33	0699-3932	1	RESISTOR 215 +-1% .063W TKF TC0+-200	00746	MCR03-F-2150
R34	0699-1360	1	RESISTOR 46.4 +-1% .125W TKF TC0+-100	05524	CRCW120646R4F
R35	0699-1360	1	RESISTOR 46.4 +-1% .125W TKF TC0+-100	05524	CRCW120646R4F
R36	0699-1360	1	RESISTOR 46.4 +-1% .125W TKF TC0+-100	05524	CRCW120646R4F
R37	0699-1360	1	RESISTOR 46.4 +-1% .125W TKF TC0+-100	05524	CRCW120646R4F
R38	0699-1351	1	RESISTOR 19.6 +-1% .125W TKF TC0+-100	05524	CRCW120619R6F
R39	0699-1351	1	RESISTOR 19.6 +-1% .125W TKF TC0+-100	05524	CRCW120619R6F
R40	0699-1351	1	RESISTOR 19.6 +-1% .125W TKF TC0+-100	05524	CRCW120619R6F
R41	0699-1351	1	RESISTOR 19.6 +-1% .125W TKF TC0+-100	05524	CRCW120619R6F
R42	0699-3947	1	RESISTOR 1K +-1% .063W TKF TC0+-200	00746	MCR03-F-1001
R43	0699-3909	1	RESISTOR 21.5 +-1% .063W TKF TC0+-200	09891	RK73H1J21R5F
R44	0699-3908	1	RESISTOR 19.6 +-1% .063W TKF TC0+-200	09891	RK73H1J19R6F
R45	0699-3924	1	RESISTOR 100 +-1% .063W TKF TC0+-200	00746	MCR03-F-1000
R46	0699-3933	1	RESISTOR 237 +-1% .063W TKF TC0+-200	00746	MCR03-F-2370
R47	0699-3924	1	RESISTOR 100 +-1% .063W TKF TC0+-200	00746	MCR03-F-1000
R48	0699-3924	1	RESISTOR 100 +-1% .063W TKF TC0+-200	00746	MCR03-F-1000
R49	0699-3924	1	RESISTOR 100 +-1% .063W TKF TC0+-200	00746	MCR03-F-1000
R50	0699-3993	1	RESISTOR 100K +-1% .063W TKF TC0+-200	09891	RK73H1J1003F
R51	0699-3924	1	RESISTOR 100 +-1% .063W TKF TC0+-200	00746	MCR03-F-1000
R52	0699-3924	1	RESISTOR 100 +-1% .063W TKF TC0+-200	00746	MCR03-F-1000
R53	0699-3993	1	RESISTOR 100K +-1% .063W TKF TC0+-200	09891	RK73H1J1003F
R54	0699-3924	1	RESISTOR 100 +-1% .063W TKF TC0+-200	00746	MCR03-F-1000
R55	0699-3924	1	RESISTOR 100 +-1% .063W TKF TC0+-200	00746	MCR03-F-1000
R56	0699-3993	1	RESISTOR 100K +-1% .063W TKF TC0+-200	09891	RK73H1J1003F
R57	0699-3924	1	RESISTOR 100 +-1% .063W TKF TC0+-200	00746	MCR03-F-1000
R58	0699-3924	1	RESISTOR 100 +-1% .063W TKF TC0+-200	00746	MCR03-F-1000
R59	0699-3993	1	RESISTOR 100K +-1% .063W TKF TC0+-200	09891	RK73H1J1003F
R60	0699-3924	1	RESISTOR 100 +-1% .063W TKF TC0+-200	00746	MCR03-F-1000
R61	0699-3924	1	RESISTOR 100 +-1% .063W TKF TC0+-200	00746	MCR03-F-1000

Agilent Part Number E4402-60004
1.5 GHz Tracking Generator RF (75 Ohm)

Reference Designator	HP Part Number	Qty	Description	Mgr Code	Mfr Part Number
R62	0699-3993	1	RESISTOR 100K +-1% .063W TKF TC0+-200	09891	RK73H1J1003F
R63	0699-3924	1	RESISTOR 100 +-1% .063W TKF TC0+-200	00746	MCR03-F-1000
R64	0699-3924	1	RESISTOR 100 +-1% .063W TKF TC0+-200	00746	MCR03-F-1000
R65	0699-3993	1	RESISTOR 100K +-1% .063W TKF TC0+-200	09891	RK73H1J1003F
R66	0699-3924	1	RESISTOR 100 +-1% .063W TKF TC0+-200	00746	MCR03-F-1000
R67	0699-3924	1	RESISTOR 100 +-1% .063W TKF TC0+-200	00746	MCR03-F-1000
R68	0699-3993	1	RESISTOR 100K +-1% .063W TKF TC0+-200	09891	RK73H1J1003F
R69	0699-3924	1	RESISTOR 100 +-1% .063W TKF TC0+-200	00746	MCR03-F-1000
R70	0699-3924	1	RESISTOR 100 +-1% .063W TKF TC0+-200	00746	MCR03-F-1000
R71	0699-3993	1	RESISTOR 100K +-1% .063W TKF TC0+-200	09891	RK73H1J1003F
R72	0699-3947	1	RESISTOR 1K +-1% .063W TKF TC0+-200	00746	MCR03-F-1001
R73	0699-3947	1	RESISTOR 1K +-1% .063W TKF TC0+-200	00746	MCR03-F-1001
R74	0699-3965	1	RESISTOR 6.19K +-1% .063W TKF TC0+-200	09891	RK73H1J6191F
R75	0699-3947	1	RESISTOR 1K +-1% .063W TKF TC0+-200	00746	MCR03-F-1001
R76	0699-3965	1	RESISTOR 6.19K +-1% .063W TKF TC0+-200	09891	RK73H1J6191F
R77	0699-3941	1	RESISTOR 511 +-1% .063W TKF TC0+-200	00746	MCR03-F-5110
R78	0699-3993	1	RESISTOR 100K +-1% .063W TKF TC0+-200	09891	RK73H1J1003F
R79	0699-3993	1	RESISTOR 100K +-1% .063W TKF TC0+-200	09891	RK73H1J1003F
R80	0699-3941	1	RESISTOR 511 +-1% .063W TKF TC0+-200	00746	MCR03-F-5110
R81	0699-3924	1	RESISTOR 100 +-1% .063W TKF TC0+-200	00746	MCR03-F-1000
R82	0699-3924	1	RESISTOR 100 +-1% .063W TKF TC0+-200	00746	MCR03-F-1000
R83	0699-3924	1	RESISTOR 100 +-1% .063W TKF TC0+-200	00746	MCR03-F-1000
R84	0699-3924	1	RESISTOR 100 +-1% .063W TKF TC0+-200	00746	MCR03-F-1000
R85	0699-3952	1	RESISTOR 1.62K +-1% .063W TKF TC0+-200	09891	RK73H1J1621F
R86	0699-3942	1	RESISTOR 619 +-1% .063W TKF TC0+-200	00746	MCR03-F-6190
R87	0699-3962	1	RESISTOR 4.22K +-1% .063W TKF TC0+-200	09891	RK73H1J4221F
R88	0699-3948	1	RESISTOR 1.1K +-1% .063W TKF TC0+-200	00746	MCR03-F-1101
R89	0699-3970	1	RESISTOR 10K +-1% .063W TKF TC0+-200	09891	RK73H1J1002F
R90	0699-3935	1	RESISTOR 287 +-1% .063W TKF TC0+-200	00746	MCR03-F-2870
R91	0699-1415	1	RESISTOR 100 +-1% .125W TKF TC0+-100	05524	CRCW12061000F

 **Indicates factory-selected value*

Agilent Part Number E4402-60004
1.5 GHz Tracking Generator RF (75 Ohm)

Reference Designator	HP Part Number	Qty	Description	Mgr Code	Mfr Part Number
R92	0699-3951	1	RESISTOR 1.47K +-1% .063W TKF TC0+-200	00746	MCR03-F-1471
R93	0699-3950	1	RESISTOR 1.33K +-1% .063W TKF TC0+-200	09891	RK73H1J1331F
R94	1810-1231	1	NET-RES 8 100.0 OHM 16-PIN	05524	SOMC16-03-101G
R95	0699-3951	1	RESISTOR 1.47K +-1% .063W TKF TC0+-200	00746	MCR03-F-1471
R96	0699-3970	1	RESISTOR 10K +-1% .063W TKF TC0+-200	09891	RK73H1J1002F
R97	0699-3924	1	RESISTOR 100 +-1% .063W TKF TC0+-200	00746	MCR03-F-1000
R98	0699-3924	1	RESISTOR 100 +-1% .063W TKF TC0+-200	00746	MCR03-F-1000
R99	0699-3951	1	RESISTOR 1.47K +-1% .063W TKF TC0+-200	00746	MCR03-F-1471
R100	0699-3950	1	RESISTOR 1.33K +-1% .063W TKF TC0+-200	09891	RK73H1J1331F
R101	0699-3924	1	RESISTOR 100 +-1% .063W TKF TC0+-200	00746	MCR03-F-1000
R102	0699-3951	1	RESISTOR 1.47K +-1% .063W TKF TC0+-200	00746	MCR03-F-1471
R103	0699-3970	1	RESISTOR 10K +-1% .063W TKF TC0+-200	09891	RK73H1J1002F
R104	0699-3924	1	RESISTOR 100 +-1% .063W TKF TC0+-200	00746	MCR03-F-1000
R105	0699-3924	1	RESISTOR 100 +-1% .063W TKF TC0+-200	00746	MCR03-F-1000
R106	0699-3924	1	RESISTOR 100 +-1% .063W TKF TC0+-200	00746	MCR03-F-1000
R107	0699-3951	1	RESISTOR 1.47K +-1% .063W TKF TC0+-200	00746	MCR03-F-1471
R108	0699-3950	1	RESISTOR 1.33K +-1% .063W TKF TC0+-200	09891	RK73H1J1331F
R109	0699-3951	1	RESISTOR 1.47K +-1% .063W TKF TC0+-200	00746	MCR03-F-1471
R110	0699-3970	1	RESISTOR 10K +-1% .063W TKF TC0+-200	09891	RK73H1J1002F
R111	0699-3924	1	RESISTOR 100 +-1% .063W TKF TC0+-200	00746	MCR03-F-1000
R112	0699-3924	1	RESISTOR 100 +-1% .063W TKF TC0+-200	00746	MCR03-F-1000
R113	0699-3987	1	RESISTOR 51.1K +-1% .063W TKF TC0+-200	09891	RK73H1J5112F
R114	0699-1391	1	RESISTOR 10K +-1% .125W TKF TC0+-100	05524	CRCW12061002F
R115	0699-3987	1	RESISTOR 51.1K +-1% .063W TKF TC0+-200	09891	RK73H1J5112F
R116	0699-3987	1	RESISTOR 51.1K +-1% .063W TKF TC0+-200	09891	RK73H1J5112F
R117	0699-3987	1	RESISTOR 51.1K +-1% .063W TKF TC0+-200	09891	RK73H1J5112F
R118	0699-3987	1	RESISTOR 51.1K +-1% .063W TKF TC0+-200	09891	RK73H1J5112F
R119	0699-3993	1	RESISTOR 100K +-1% .063W TKF TC0+-200	09891	RK73H1J1003F
R120	0699-4016	1	RESISTOR 1M +-1% .063W TKF TC0+-200	00746	MCR03-F-1004
R121	0699-3993	1	RESISTOR 100K +-1% .063W TKF TC0+-200	09891	RK73H1J1003F

Agilent Part Number E4402-60004
1.5 GHz Tracking Generator RF (75 Ohm)

Reference Designator	HP Part Number	Qty	Description	Mgr Code	Mfr Part Number
R122	0699-3993	1	RESISTOR 100K +-1% .063W TKF TC0+-200	09891	RK73H1J1003F
R123	0699-3993	1	RESISTOR 100K +-1% .063W TKF TC0+-200	09891	RK73H1J1003F
R124	0699-4016	1	RESISTOR 1M +-1% .063W TKF TC0+-200	00746	MCR03-F-1004
R125	0699-3993	1	RESISTOR 100K +-1% .063W TKF TC0+-200	09891	RK73H1J1003F
R126	0699-3970	1	RESISTOR 10K +-1% .063W TKF TC0+-200	09891	RK73H1J1002F
R127	0699-3970	1	RESISTOR 10K +-1% .063W TKF TC0+-200	09891	RK73H1J1002F
R128	0699-3964	1	RESISTOR 5.11K +-1% .063W TKF TC0+-200	09891	RK73H1J5111F
R129	0699-3924	1	RESISTOR 100 +-1% .063W TKF TC0+-200	00746	MCR03-F-1000
R130	0699-3970	1	RESISTOR 10K +-1% .063W TKF TC0+-200	09891	RK73H1J1002F
R131	0699-3970	1	RESISTOR 10K +-1% .063W TKF TC0+-200	09891	RK73H1J1002F
R132	0699-3964	1	RESISTOR 5.11K +-1% .063W TKF TC0+-200	09891	RK73H1J5111F
R133	0699-3924	1	RESISTOR 100 +-1% .063W TKF TC0+-200	00746	MCR03-F-1000
R134	0699-3947	1	RESISTOR 1K +-1% .063W TKF TC0+-200	00746	MCR03-F-1001
R135	0699-3924	1	RESISTOR 100 +-1% .063W TKF TC0+-200	00746	MCR03-F-1000
R136	0699-3955	1	RESISTOR 2.15K +-1% .063W TKF TC0+-200	09891	RK73H1J2151F
R137	0699-3946	1	RESISTOR 909 +-1% .063W TKF TC0+-200	00746	MCR03-F-9090
R138	0699-3970	1	RESISTOR 10K +-1% .063W TKF TC0+-200	09891	RK73H1J1002F
R139	0699-3970	1	RESISTOR 10K +-1% .063W TKF TC0+-200	09891	RK73H1J1002F
R140	0811-3575	1	RESISTOR 3K +-2% .125W PN TC+5600+-300	02499	R3118
R141	0699-3970	1	RESISTOR 10K +-1% .063W TKF TC0+-200	09891	RK73H1J1002F
R142	0699-3970	1	RESISTOR 10K +-1% .063W TKF TC0+-200	09891	RK73H1J1002F
R143	0699-3987	1	RESISTOR 51.1K +-1% .063W TKF TC0+-200	09891	RK73H1J5112F
R144	0699-3947	1	RESISTOR 1K +-1% .063W TKF TC0+-200	00746	MCR03-F-1001
R145	0699-3947	1	RESISTOR 1K +-1% .063W TKF TC0+-200	00746	MCR03-F-1001
R146	0699-3923	1	RESISTOR 90.9 +-1% .063W TKF TC0+-200	00746	MCR03-F-90R9
R147	0699-3987	1	RESISTOR 51.1K +-1% .063W TKF TC0+-200	09891	RK73H1J5112F
R148	0699-3970	1	RESISTOR 10K +-1% .063W TKF TC0+-200	09891	RK73H1J1002F
R149	0699-3968	1	RESISTOR 8.25K +-1% .063W TKF TC0+-200	09891	RK73H1J8251F
R150	0699-3993	1	RESISTOR 100K +-1% .063W TKF TC0+-200	09891	RK73H1J1003F
R151	0699-3987	1	RESISTOR 51.1K +-1% .063W TKF TC0+-200	09891	RK73H1J5112F

 **Indicates factory-selected value*

Agilent Part Number E4402-60004
1.5 GHz Tracking Generator RF (75 Ohm)

Reference Designator	HP Part Number	Qty	Description	Mgr Code	Mfr Part Number
R152	0699-3993	1	RESISTOR 100K +-1% .063W TKF TC0+-200	09891	RK73H1J1003F
R153	0699-3987	1	RESISTOR 51.1K +-1% .063W TKF TC0+-200	09891	RK73H1J5112F
R154	0699-3987	1	RESISTOR 51.1K +-1% .063W TKF TC0+-200	09891	RK73H1J5112F
R155	0699-3955	1	RESISTOR 2.15K +-1% .063W TKF TC0+-200	09891	RK73H1J2151F
R156	0699-3968	1	RESISTOR 8.25K +-1% .063W TKF TC0+-200	09891	RK73H1J8251F
R157	0699-3993	1	RESISTOR 100K +-1% .063W TKF TC0+-200	09891	RK73H1J1003F
R158	0699-3993	1	RESISTOR 100K +-1% .063W TKF TC0+-200	09891	RK73H1J1003F
R159	0699-3955	1	RESISTOR 2.15K +-1% .063W TKF TC0+-200	09891	RK73H1J2151F
R160	0699-3959	1	RESISTOR 3.16K +-1% .063W TKF TC0+-200	00746	MCR03-F-3161
R161	0699-3959	1	RESISTOR 3.16K +-1% .063W TKF TC0+-200	00746	MCR03-F-3161
R162	0699-3955	1	RESISTOR 2.15K +-1% .063W TKF TC0+-200	09891	RK73H1J2151F
R163	0699-3959	1	RESISTOR 3.16K +-1% .063W TKF TC0+-200	00746	MCR03-F-3161
R164	0699-3959	1	RESISTOR 3.16K +-1% .063W TKF TC0+-200	00746	MCR03-F-3161
R165	0699-3935	1	RESISTOR 287 +-1% .063W TKF TC0+-200	00746	MCR03-F-2870
R166	0699-3985	1	RESISTOR 42.2K +-1% .063W TKF TC0+-200	09891	RK73H1J4222F
R167	0699-3970	1	RESISTOR 10K +-1% .063W TKF TC0+-200	09891	RK73H1J1002F
R168	0699-3964	1	RESISTOR 5.11K +-1% .063W TKF TC0+-200	09891	RK73H1J5111F
R169	0699-3970	1	RESISTOR 10K +-1% .063W TKF TC0+-200	09891	RK73H1J1002F
R170	0811-3619	1	RESISTOR 260 +-2% .125W PN TC+3400+-300	02499	R3129
R171	0699-3908	1	RESISTOR 19.6 +-1% .063W TKF TC0+-200	09891	RK73H1J19R6F
R172	0699-4005	1	RESISTOR 316K +-1% .063W TKF TC0+-200	09891	RK73H1J3163F
R173	0811-3575	1	RESISTOR 3K +-2% .125W PN TC+5600+-300	02499	R3118
R174	0699-3977	1	RESISTOR 19.6K +-1% .063W TKF TC0+-200	09891	RK73H1J1962F
R175	0699-3970	1	RESISTOR 10K +-1% .063W TKF TC0+-200	09891	RK73H1J1002F
R176	0699-3970	1	RESISTOR 10K +-1% .063W TKF TC0+-200	09891	RK73H1J1002F
R177	0699-3982	1	RESISTOR 31.6K +-1% .063W TKF TC0+-200	09891	RK73H1J3162F
R178	0699-4005	1	RESISTOR 316K +-1% .063W TKF TC0+-200	09891	RK73H1J3163F
R179	0699-3924	1	RESISTOR 100 +-1% .063W TKF TC0+-200	00746	MCR03-F-1000
R180	0699-3970	1	RESISTOR 10K +-1% .063W TKF TC0+-200	09891	RK73H1J1002F
R181	0699-3970	1	RESISTOR 10K +-1% .063W TKF TC0+-200	09891	RK73H1J1002F

Agilent Part Number E4402-60004
1.5 GHz Tracking Generator RF (75 Ohm)

Reference Designator	HP Part Number	Qty	Description	Mgr Code	Mfr Part Number
R182	1810-1581	1	NET-RES 4 33.0 OHM 8-PIN	00746	MNR34K5AWJ330
R183	0699-3924	1	RESISTOR 100 +-1% .063W TKF TC0+-200	00746	MCR03-F-1000
R184	0699-3918	1	RESISTOR 51.1 +-1% .063W TKF TC0+-200	00746	MCR03-F-51R1
R186	0699-3918	1	RESISTOR 51.1 +-1% .063W TKF TC0+-200	00746	MCR03-F-51R1
R187	1810-1581	1	NET-RES 4 33.0 OHM 8-PIN	00746	MNR34K5AWJ330
R188	1810-1581	1	NET-RES 4 33.0 OHM 8-PIN	00746	MNR34K5AWJ330
R190	0699-1356	1	RESISTOR 31.6 +-1% .25W TKF TC0+-100	09891	RK73H2BT31R6F
R191	0699-3935	1	RESISTOR 287 +-1% .063W TKF TC0+-200	00746	MCR03-F-2870
R192	0699-2831	1	RESISTOR 150 +-0.1% .125W TF TC0+-25	02499	W1206R031500BT
R385	0699-3955	1	RESISTOR 2.15K +-1% .063W TKF TC0+-200	09891	RK73H1J2151F
R454	0699-3990	1	RESISTOR 75K +-1% .063W TKF TC0+-200	09891	RK73H1J7502F
R455	0699-3970	1	RESISTOR 10K +-1% .063W TKF TC0+-200	09891	RK73H1J1002F
R456	0699-3950	1	RESISTOR 1.33K +-1% .063W TKF TC0+-200	09891	RK73H1J1331F
R457	0699-3972	1	RESISTOR 12.1K +-1% .063W TKF TC0+-200	09891	RK73H1J1212F
R458	0699-3990	1	RESISTOR 75K +-1% .063W TKF TC0+-200	09891	RK73H1J7502F
R459	0699-3924	1	RESISTOR 100 +-1% .063W TKF TC0+-200	00746	MCR03-F-1000
R460	0699-3950	1	RESISTOR 1.33K +-1% .063W TKF TC0+-200	09891	RK73H1J1331F
R461	0699-1374	1	RESISTOR 1.78K +-1% .125W TKF TC0+-100	09891	RK73H2BT1781F
R462	0699-3932	1	RESISTOR 215 +-1% .063W TKF TC0+-200	00746	MCR03-F-2150
R463	0699-3970	1	RESISTOR 10K +-1% .063W TKF TC0+-200	09891	RK73H1J1002F
R464	0699-3929	1	RESISTOR 162 +-1% .063W TKF TC0+-200	09891	RK73H1J1620F
R465	0699-1363	1	RESISTOR 61.9 +-1% .125W TKF TC0+-100	05524	CRCW120661R9F
R466	0699-1416	1	RESISTOR 110 +-1% .125W TKF TC0+-100	05524	CRCW12061100F
R467	0699-1416	1	RESISTOR 110 +-1% .125W TKF TC0+-100	05524	CRCW12061100F
R468	0699-3918	1	RESISTOR 51.1 +-1% .063W TKF TC0+-200	00746	MCR03-F-51R1
R469	0699-3913	1	RESISTOR 31.6 +-1% .063W TKF TC0+-200	09891	RK73H1J31R6F
R470	0699-1416	1	RESISTOR 110 +-1% .125W TKF TC0+-100	05524	CRCW12061100F
R471	0699-1416	1	RESISTOR 110 +-1% .125W TKF TC0+-100	05524	CRCW12061100F
R472	0699-1416	1	RESISTOR 110 +-1% .125W TKF TC0+-100	05524	CRCW12061100F
R473	0699-3908	1	RESISTOR 19.6 +-1% .063W TKF TC0+-200	09891	RK73H1J19R6F

 **Indicates factory-selected value*

Agilent Part Number E4402-60004
1.5 GHz Tracking Generator RF (75 Ohm)

Reference Designator	HP Part Number	Qty	Description	Mgr Code	Mfr Part Number
R474	0699-1358	1	RESISTOR 38.3 +-1% .125W TKF TC0+-100	09891	RK73H2BT38R3F
R475	0699-3941	1	RESISTOR 511 +-1% .063W TKF TC0+-200	00746	MCR03-F-5110
R476	0699-1358	1	RESISTOR 38.3 +-1% .125W TKF TC0+-100	09891	RK73H2BT38R3F
R477	0699-1358	1	RESISTOR 38.3 +-1% .125W TKF TC0+-100	09891	RK73H2BT38R3F
R478	0699-1358	1	RESISTOR 38.3 +-1% .125W TKF TC0+-100	09891	RK73H2BT38R3F
R479	0699-3920	1	RESISTOR 68.1 +-1% .063W TKF TC0+-200	09891	RK73H1J68R1F
R480	0699-3947	1	RESISTOR 1K +-1% .063W TKF TC0+-200	00746	MCR03-F-1001
R481	0699-3901	1	RESISTOR 10 +-1% .063W TKF TC0+-200	00746	MCR03-F-10R0
R482	0699-3901	1	RESISTOR 10 +-1% .063W TKF TC0+-200	00746	MCR03-F-10R0
R483	0699-3930	1	RESISTOR 178 +-1% .063W TKF TC0+-200	00746	MCR03-F-1780
R484	0699-1357	1	RESISTOR 34.8 +-1% .125W TKF TC0+-100	09891	RK73H2BT34R8F
R485	0699-1415	1	RESISTOR 100 +-1% .125W TKF TC0+-100	05524	CRCW12061000F
R486	0699-1357	1	RESISTOR 34.8 +-1% .125W TKF TC0+-100	09891	RK73H2BT34R8F
R487	0699-1357	1	RESISTOR 34.8 +-1% .125W TKF TC0+-100	09891	RK73H2BT34R8F
R488	0699-1415	1	RESISTOR 100 +-1% .125W TKF TC0+-100	05524	CRCW12061000F
R489	0699-1415	1	RESISTOR 100 +-1% .125W TKF TC0+-100	05524	CRCW12061000F
R490	0699-3926	1	RESISTOR 121 +-1% .063W TKF TC0+-200	00746	MCR03-F-1210
R491	0699-3916	1	RESISTOR 42.2 +-1% .063W TKF TC0+-200	09891	RK73H1J42R2F
R492	0699-1357	1	RESISTOR 34.8 +-1% .125W TKF TC0+-100	09891	RK73H2BT34R8F
R493	0699-1357	1	RESISTOR 34.8 +-1% .125W TKF TC0+-100	09891	RK73H2BT34R8F
R494	0699-1415	1	RESISTOR 100 +-1% .125W TKF TC0+-100	05524	CRCW12061000F
R495	0699-3926	1	RESISTOR 121 +-1% .063W TKF TC0+-200	00746	MCR03-F-1210
R496	0699-3964	1	RESISTOR 5.11K +-1% .063W TKF TC0+-200	09891	RK73H1J5111F
R497	0699-3948	1	RESISTOR 1.1K +-1% .063W TKF TC0+-200	00746	MCR03-F-1101
R498	0699-3942	1	RESISTOR 619 +-1% .063W TKF TC0+-200	00746	MCR03-F-6190
R499	0699-3942	1	RESISTOR 619 +-1% .063W TKF TC0+-200	00746	MCR03-F-6190
R500	0699-3963	1	RESISTOR 4.64K +-1% .063W TKF TC0+-200	09891	RK73H1J4641F
R501	0699-3942	1	RESISTOR 619 +-1% .063W TKF TC0+-200	00746	MCR03-F-6190
R502	0699-3942	1	RESISTOR 619 +-1% .063W TKF TC0+-200	00746	MCR03-F-6190
R503	0699-3963	1	RESISTOR 4.64K +-1% .063W TKF TC0+-200	09891	RK73H1J4641F

Agilent Part Number E4402-60004
1.5 GHz Tracking Generator RF (75 Ohm)

Reference Designator	HP Part Number	Qty	Description	Mgr Code	Mfr Part Number
R504	0699-3955	1	RESISTOR 2.15K +-1% .063W TKF TC0+-200	09891	RK73H1J2151F
R505	0699-3955	1	RESISTOR 2.15K +-1% .063W TKF TC0+-200	09891	RK73H1J2151F
R506	0699-3918	1	RESISTOR 51.1 +-1% .063W TKF TC0+-200	00746	MCR03-F-51R1
R507	0699-3952	1	RESISTOR 1.62K +-1% .063W TKF TC0+-200	09891	RK73H1J1621F
R508	0699-3928	1	RESISTOR 147 +-1% .063W TKF TC0+-200	00746	MCR03-F-1470
R509	0699-3919	1	RESISTOR 61.9 +-1% .063W TKF TC0+-200	05524	CRCW060361R9F
R510	0699-3918	1	RESISTOR 51.1 +-1% .063W TKF TC0+-200	00746	MCR03-F-51R1
R511	0699-3963	1	RESISTOR 4.64K +-1% .063W TKF TC0+-200	09891	RK73H1J4641F
R512	0699-3970	1	RESISTOR 10K +-1% .063W TKF TC0+-200	09891	RK73H1J1002F
R513	0699-3952	1	RESISTOR 1.62K +-1% .063W TKF TC0+-200	09891	RK73H1J1621F
R514	0699-3964	1	RESISTOR 5.11K +-1% .063W TKF TC0+-200	09891	RK73H1J5111F
R515	0699-3574	1	RESISTOR 0 .0625W TKF	09891	RM73Z1JT
R516	0699-3964	1	RESISTOR 5.11K +-1% .063W TKF TC0+-200	09891	RK73H1J5111F
R517	0699-3941	1	RESISTOR 511 +-1% .063W TKF TC0+-200	00746	MCR03-F-5110
R518	0699-3918	1	RESISTOR 51.1 +-1% .063W TKF TC0+-200	00746	MCR03-F-51R1
R519	0699-3941	1	RESISTOR 511 +-1% .063W TKF TC0+-200	00746	MCR03-F-5110
R520	0699-3955	1	RESISTOR 2.15K +-1% .063W TKF TC0+-200	09891	RK73H1J2151F
R521	0699-3955	1	RESISTOR 2.15K +-1% .063W TKF TC0+-200	09891	RK73H1J2151F
R522	0699-3918	1	RESISTOR 51.1 +-1% .063W TKF TC0+-200	00746	MCR03-F-51R1
R523	0699-2831	1	RESISTOR 150 +-0.1% .125W TF TC0+-25	02499	W1206R031500BT
R524	0699-3955	1	RESISTOR 2.15K +-1% .063W TKF TC0+-200	09891	RK73H1J2151F
R525	0699-2831	1	RESISTOR 150 +-0.1% .125W TF TC0+-25	02499	W1206R031500BT
R526	0699-3939	1	RESISTOR 422 +-1% .063W TKF TC0+-200	09891	RK73H1J4220F
R527	0699-3903	1	RESISTOR 12.1 +-1% .063W TKF TC0+-200	09891	RK7H1J12R1F
R528	0699-3939	1	RESISTOR 422 +-1% .063W TKF TC0+-200	09891	RK73H1J4220F
R529	1810-1360	1	NET-RES 8 10.0K OHM 16-PIN	05524	SOMC-1603-103G
R530	0699-1422	1	RESISTOR 196 +-1% .125W TKF TC0+-100	09891	RK73H2BT1960F
R531	0699-1422	1	RESISTOR 196 +-1% .125W TKF TC0+-100	09891	RK73H2BT1960F
R532	0699-1422	1	RESISTOR 196 +-1% .125W TKF TC0+-100	09891	RK73H2BT1960F
R546	0699-3941	1	RESISTOR 511 +-1% .063W TKF TC0+-200	00746	MCR03-F-5110

 **Indicates factory-selected value*

Agilent Part Number E4402-60004
1.5 GHz Tracking Generator RF (75 Ohm)

Reference Designator	HP Part Number	Qty	Description	Mgr Code	Mfr Part Number
R565	0699-3909	1	RESISTOR 21.5 +-1% .063W TKF TC0+-200	09891	RK73H1J21R5F
R573	0699-3930	1	RESISTOR 178 +-1% .063W TKF TC0+-200	00746	MCR03-F-1780
R574	0699-3947	1	RESISTOR 1K +-1% .063W TKF TC0+-200	00746	MCR03-F-1001
R575	0699-3909	1	RESISTOR 21.5 +-1% .063W TKF TC0+-200	09891	RK73H1J21R5F
R576	0699-3955	1	RESISTOR 2.15K +-1% .063W TKF TC0+-200	09891	RK73H1J2151F
R577	0699-3964	1	RESISTOR 5.11K +-1% .063W TKF TC0+-200	09891	RK73H1J5111F
R578	0699-3941	1	RESISTOR 511 +-1% .063W TKF TC0+-200	00746	MCR03-F-5110
R579	0699-3918	1	RESISTOR 51.1 +-1% .063W TKF TC0+-200	00746	MCR03-F-51R1
R580	0699-3908	1	RESISTOR 19.6 +-1% .063W TKF TC0+-200	09891	RK73H1J19R6F
R581	0699-1422	1	RESISTOR 196 +-1% .125W TKF TC0+-100	09891	RK73H2BT1960F
U1	1820-4966	1	IC FF CMOS/HC D-TYPE POS-EDGE-TRIG	01698	SN74HC74D
U2	1826-2349	1	IC RF/IF AMPL LOW-NOISE 4 PIN	01542	INA-10386
U3	1826-2717	1	IC RF/IF AMPL 4 PIN U-WAVE-PILL	01542	MSA-0886
U4	1826-2421	1	IC RF/IF AMPL 4 PIN U-WAVE-PILL	01542	MSA-0505
U5	1826-1528	1	IC COMPARATOR LP QUAD 14 PIN PLSTC-SOIC	03406	LM339M
U6	1826-3348	1	IC MISC 16 PIN PLSTC-SOIC	02788	AT-220PIN
U7	1826-1528	1	IC COMPARATOR LP QUAD 14 PIN PLSTC-SOIC	03406	LM339M
U8	1826-3348	1	IC MISC 16 PIN PLSTC-SOIC	02788	AT-220PIN
U9	1826-1528	1	IC COMPARATOR LP QUAD 14 PIN PLSTC-SOIC	03406	LM339M
U10	1826-1594	1	IC COMPARATOR GP SINGLE 8 PIN PLSTC-SOIC	03406	LM311M
U11	1826-1528	1	IC COMPARATOR LP QUAD 14 PIN PLSTC-SOIC	03406	LM339M
U12	1826-1135	1	IC OP AMP PRCN 8 PIN DIP-C	03285	OP-27EZ
U13	1826-1862	1	IC OP AMP LOW-BIAS-H-IMPD DUAL 8 PIN	04078	TL072CD
U14	1826-1135	1	IC OP AMP PRCN 8 PIN DIP-C	03285	OP-27EZ
U15	1820-4693	1	IC GATE CMOS/HC AND QUAD 2-INP	01698	SN74HC08D
U16	1826-1862	1	IC OP AMP LOW-BIAS-H-IMPD DUAL 8 PIN	04078	TL072CD

Agilent Part Number E4402-60004
1.5 GHz Tracking Generator RF (75 Ohm)

Reference Designator	HP Part Number	Qty	Description	Mgr Code	Mfr Part Number
U17	1826-1528	1	IC COMPARATOR LP QUAD 14 PIN PLSTC-SOIC	03406	LM339M
U18	1826-1135	1	IC OP AMP PRCN 8 PIN DIP-C	03285	OP-27EZ
U19	1826-1594	1	IC COMPARATOR GP SINGLE 8 PIN PLSTC-SOIC	03406	LM311M
U20	1826-1594	1	IC COMPARATOR GP SINGLE 8 PIN PLSTC-SOIC	03406	LM311M
U21	1826-1458	1	D/A 8-DGT 16-P-SOIC	02910	DAC-08ED
U22	1826-1862	1	IC OP AMP LOW-BIAS-H-IMPD DUAL 8 PIN	04078	TL072CD
U23	1820-5220	1	IC INV CMOS/HC HEX	01698	SN74HC04D
U24	1818-5236	1	IC 4K-BIT EEPROM 500-NS CMOS	04078	M93C66-MN6
U25	1820-6277	1	IC SHF-RGTR CMOS/HC SYNC/ASYNC SERIAL-IN	02237	MM74HC595M
U26	1820-6277	1	IC SHF-RGTR CMOS/HC SYNC/ASYNC SERIAL-IN	02237	MM74HC595M
U27	1820-6277	1	IC SHF-RGTR CMOS/HC SYNC/ASYNC SERIAL-IN	02237	MM74HC595M
U28	1820-4215	1	IC DCDR-DEMUXR CMOS/HC BIN 3-TO-8-LINE	02910	74HC138D
U29	1820-6277	1	IC SHF-RGTR CMOS/HC SYNC/ASYNC SERIAL-IN	02237	MM74HC595M
U30	1820-6277	1	IC SHF-RGTR CMOS/HC SYNC/ASYNC SERIAL-IN	02237	MM74HC595M
U31	1826-1619	1	D/A 8-BIT 20-PLCC CMOS	03285	AD7528JP
U32	1826-1862	1	IC OP AMP LOW-BIAS-H-IMPD DUAL 8 PIN	04078	TL072CD
U33	1820-6277	1	IC SHF-RGTR CMOS/HC SYNC/ASYNC SERIAL-IN	02237	MM74HC595M
U34	1826-1950	1	IC COMPARATOR HS SINGLE 8 PIN PLSTC-SOIC	10858	LT1016CS8
U35	1820-6154	1	IC-PROGRAMMABLE INTERVAL TIMER	28480	1820-6154
U36	1820-6406	1	IC CNTR CMOS/HC BIN UP/DOWN SYNCHRO	02910	74HC191D
U37	1820-6406	1	IC CNTR CMOS/HC BIN UP/DOWN SYNCHRO	02910	74HC191D
U38	1820-6406	1	IC CNTR CMOS/HC BIN UP/DOWN SYNCHRO	02910	74HC191D
U39	1826-2153	1	D/A 12-BIT 20-PLCC CMOS	03285	AD7545AKP

 **Indicates factory-selected value*

Agilent Part Number E4402-60004
1.5 GHz Tracking Generator RF (75 Ohm)

Reference Designator	HP Part Number	Qty	Description	Mgr Code	Mfr Part Number
U40	1826-1862	1	IC OP AMP LOW-BIAS-H-IMPD DUAL 8 PIN	04078	TL072CD
U41	1826-1687	1	IC PWR MGT-V-REF-FXD 9.95/10.05V 8 PINS	10858	LT1021DCS8-10
U42	1820-4220	1	IC GATE CMOS/HC OR QUAD 2-INP	02910	74HC32D
U65	1826-2888	1	IC TEMP XDCR PRCN SINGLE 8 PIN	03406	LM335AM
U66	1826-2717	1	IC RF/IF AMPL 4 PIN U-WAVE-PILL	01542	MSA-0886
U67	1826-2133	1	IC RF/IF AMPL WB 4 PIN U-WAVE-PILL	01542	MSA-1105
U68	1826-2204	1	IC RF/IF AMPL SINGLE 4 PIN U-WAVE-PILL	01542	MSA-0686
U69	1820-5945	1	IC GATE CMOS/AC NAND QUAD 2-INP	36633	MC74AC00D
U71	1820-5937	1	IC FF CMOS/AC D-TYPE POS-EDGE-TRIG	02237	74AC74SC.
U72	1826-1925	1	IC OP AMP LOW-NOISE SINGLE 8 PIN	03285	OP-27GS
U73	1826-3000	1	IC AUDIO AMPL LOW-NOISE DUAL 8 PIN	03285	OP275GS
U74	1821-2086	1	IC PRESCALER ECL 8-SOIC	02037	MC12026AD
U75	1820-5938	1	IC GATE CMOS/ACT NAND QUAD 2-INP	01698	SN74ACT00D
U76	1820-7218	1	IC CNTR CMOS/AC BIN SYNCHRO	02237	74AC163SCX.

5300 D-E4402-60004-2

SYM	REVISIONS	APPROVED	DATE
A	AS ISSUED /RO		
B	J6 HATCHED LCN 53-E4401-134		
C	CHANGED PER PCO 53-12266 /HK		

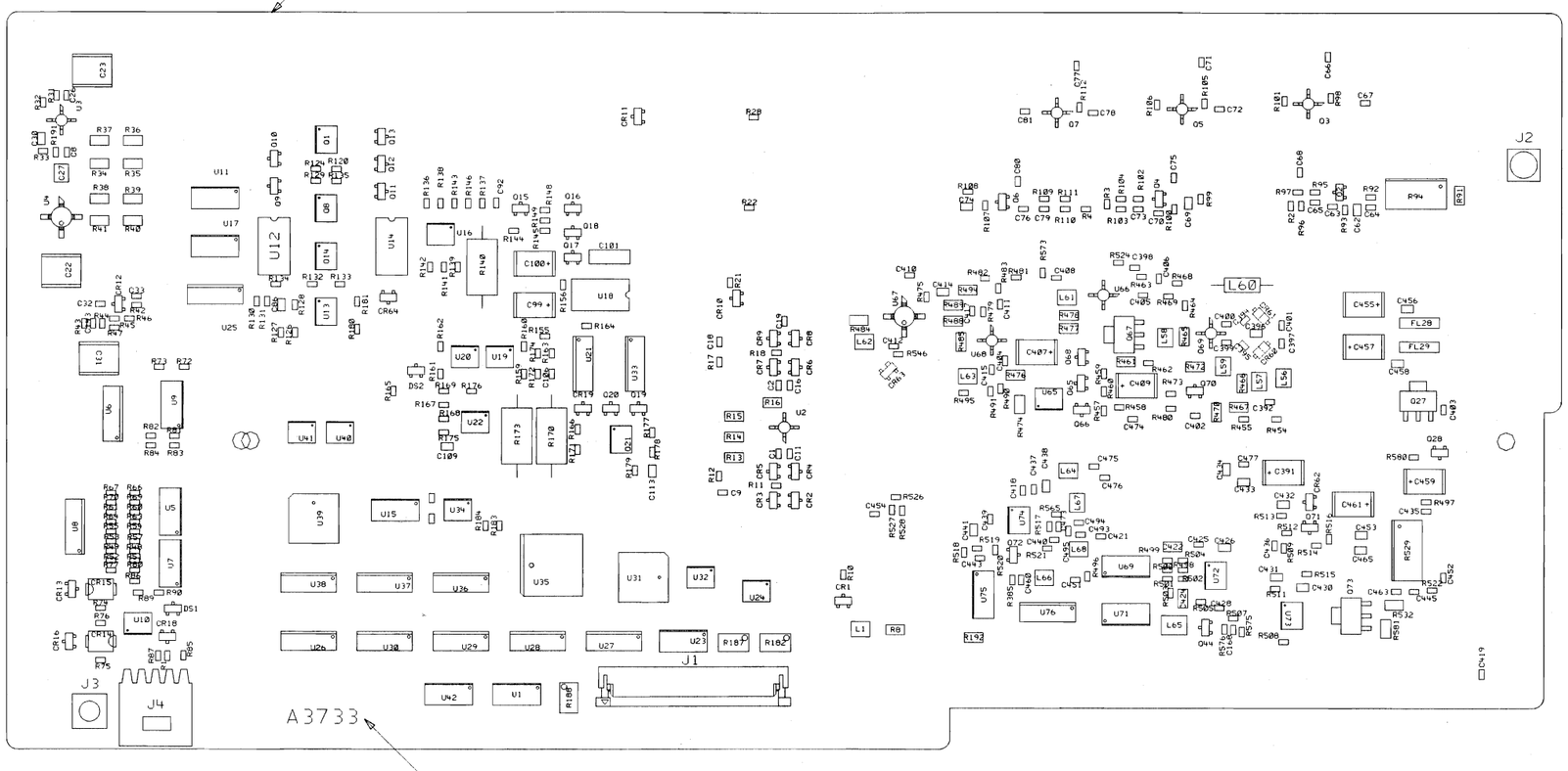

NOTES: UNLESS OTHERWISE SPECIFIED

1. USE RAW BOARD PART NUMBER E4401-20004.
2. THERE ARE NUMEROUS PART TO PART SPACING VIOLATIONS.
3. HATCHED COMPONENTS ARE NOT LOADED.

(TOP SIDE)

FOR MATERIAL LIST SEE E4402-60004

HP PROPRIETARY
THIS DOCUMENT CONTAINS CONFIDENTIAL, PROPRIETARY INFORMATION THAT IS HEWLETT-PACKARD (HP) PROPERTY. DO NOT DISCLOSE TO OR DUPLICATE FOR OTHERS EXCEPT AS AUTHORIZED BY HP.

UNLESS OTHERWISE SPECIFIED, DIMENSIONS ARE IN INCHES.
TOLERANCES: XX.XXX ±.010 XX.XX ±.02
THIRD ANGLE PROJECTION
DO NOT SCALE THIS DRAWING

DRAWN BY | DATE
ENGINEER/CHECKER | DATE
RELEASE TO PROD. | DATE
SUPERSEDES DWG.

TITLE: ASSEMBLY, PWB SOURCE RF

FILENAME: alaep004
SCALE: NONE
SHEET 1 OF 2
HEWLETT PACKARD
PART NUMBER: E4401-60004
D-E4402-60004-2

S300 D-E4402-60004-2

SYM	REVISIONS	APPROVED	DATE
	SEE SHEET 1		

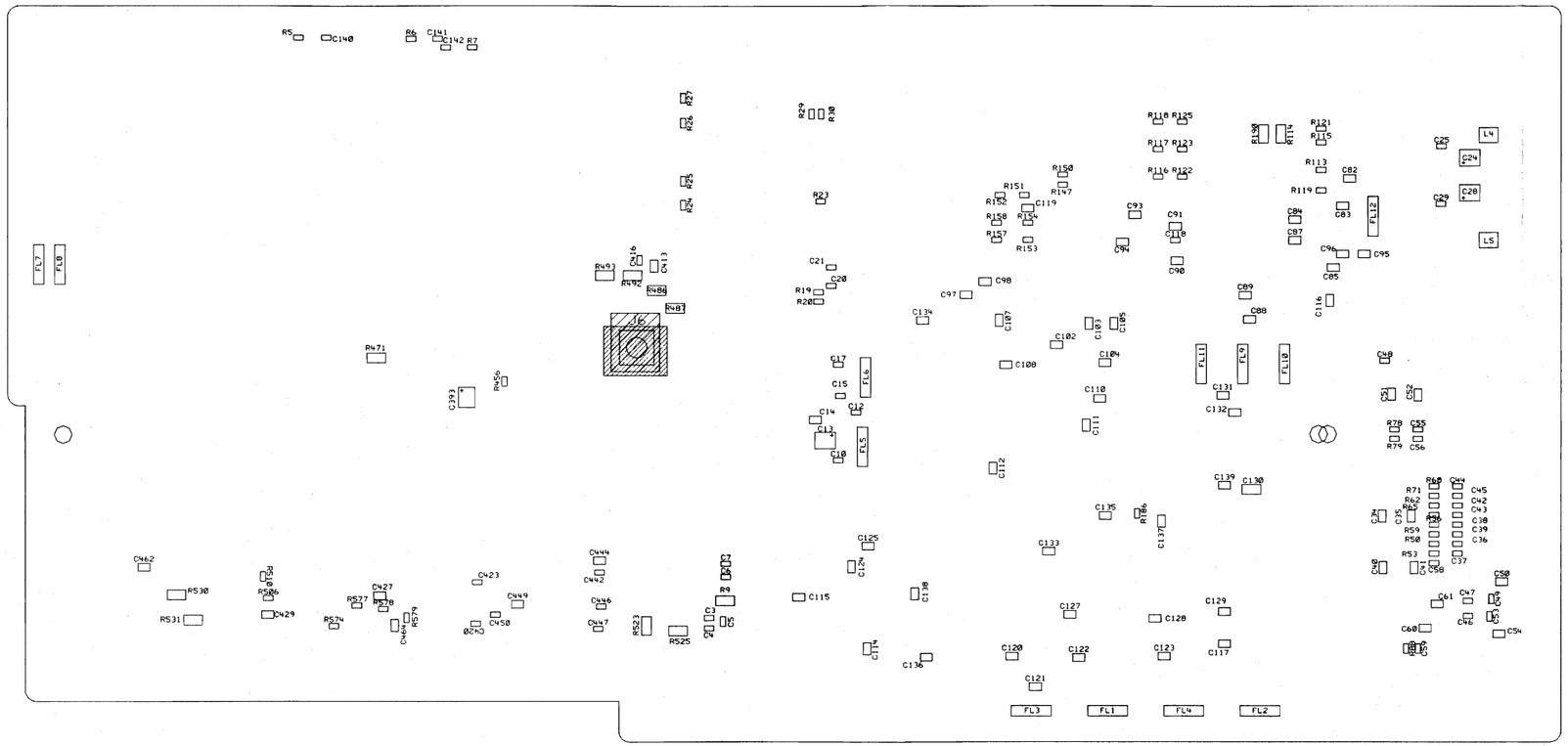

(BOTTOM SIDE)

HP PROPRIETARY
THIS DOCUMENT CONTAINS CONFIDENTIAL, PROPRIETARY INFORMATION THAT IS HEWLETT-PACKARD (HP) PROPERTY. DO NOT DISCLOSE TO OR DUPLICATE FOR OTHERS EXCEPT AS AUTHORIZED BY HP.

UNLESS OTHERWISE SPECIFIED, DIMENSIONS ARE IN INCHES.
TOLERANCES: XX.XXX ±.010 XX.XX ±.02
THIRD ANGLE PROJECTION
DO NOT SCALE THIS DRAWING

DRAWN BY	DATE	ASSEMBLY, PWB SOURCE RF
ENGINEER/CHECKER	DATE	
RELEASE TO PROD.	DATE	
SUPERSEDES DWG.		TITLE

a6aep004 FILENAME
SCALE NONE
SHEET 2 OF 2
HEWLETT PACKARD
E4401-60004 PART NUMBER
D-E4402-60004-2

D-E4402-60004-1

REV	INFORMATION	APPROVED	DATE
A	AS ISSUED		
B	PCO 53-11226		

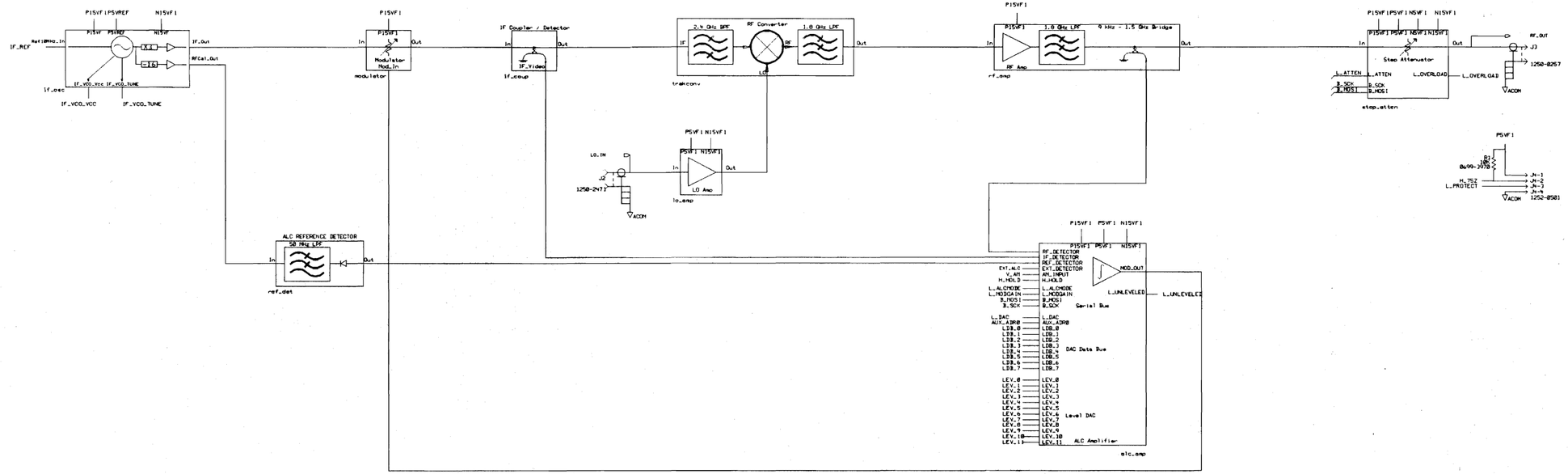

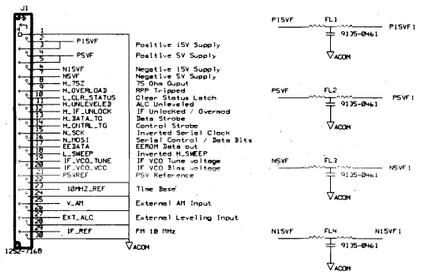

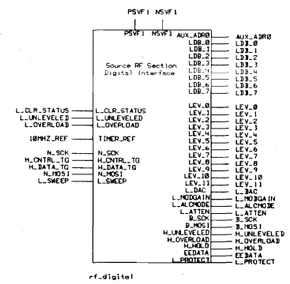

Measurement Conditions
Frequency: 50 MHz CW
Amplitude: -10 dBm
Output Atten: 0dB
Modulation: Off
Room Temp: 25 Deg C

Test Points
IN NONE
TP xxxxxxx

Schematic Differences
U4 None
CR: None
JS: None
FL1:FL4
J1-J4
L: None
Q1, Q8-Q21
R1
U: None

P Assembly Differences
Q2,Q3,Q5,Q11,Q14,Q22
CR10 ->
JS1 ->
FL13 -> FL28
J6 ->
L5 ->
Q23 -> Q26
R6,R91,R137,R189-R3xx
U42 -> U64

USE RAW BOARD NUMBER E4401-20004

HP PROPRIETARY
THIS DOCUMENT CONTAINS CONFIDENTIAL, PROPRIETARY INFORMATION THAT IS HEWLETT-PACKARD (HP) PROPERTY. DO NOT DISCLOSE TO OR DUPLICATE FOR OTHERS EXCEPT AS AUTHORIZED BY HP.

LAST CHECKED	DATE	SCHEMATIC, PWA TRACKING GENERATOR RF BOARD INTERCONNECT DIAGRAM	HEWLETT PACKARD 5100
ENGINEER	SHEET 1 OF 1	TITLE	E4402-60004 PART NUMBER
DRAWN BY	SIZE D	HP_MID/economy/CH402/a000v/AB3733/ PATHNAME rf_board.top sheet1	
	AB3733 ASSY. REV	A3637 DWG. REV	PAGE 1 OF 11	D-E4402-60004-1 DWG. NO.

REVISIONS
SEE PAGE 1 FOR REVISION HISTORY

(Q) IF OSCILLATOR AND 50 MHZ ALC REFERENCE

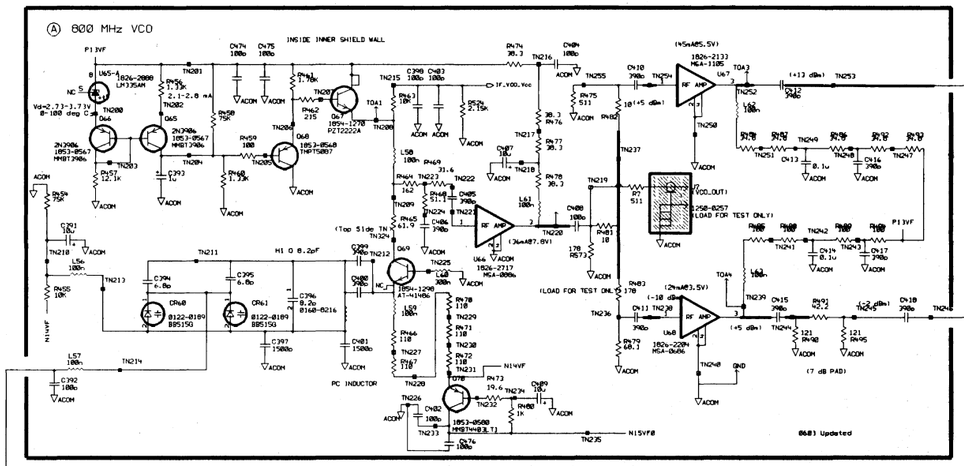

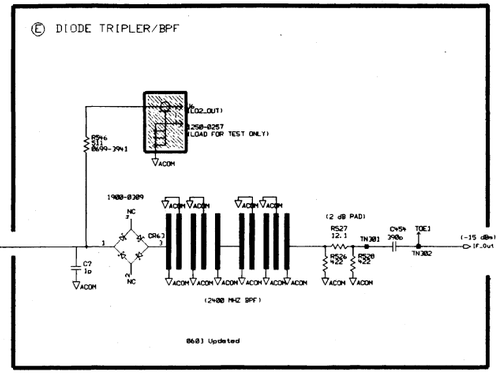

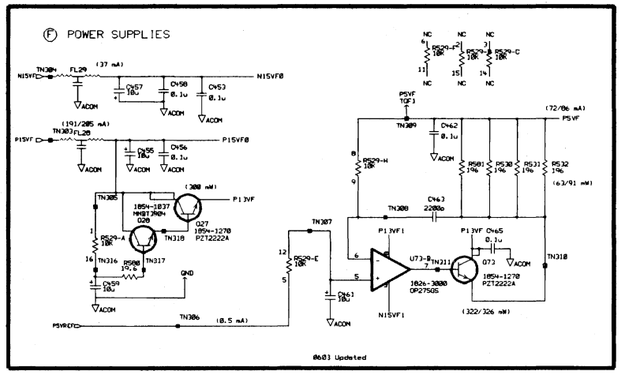

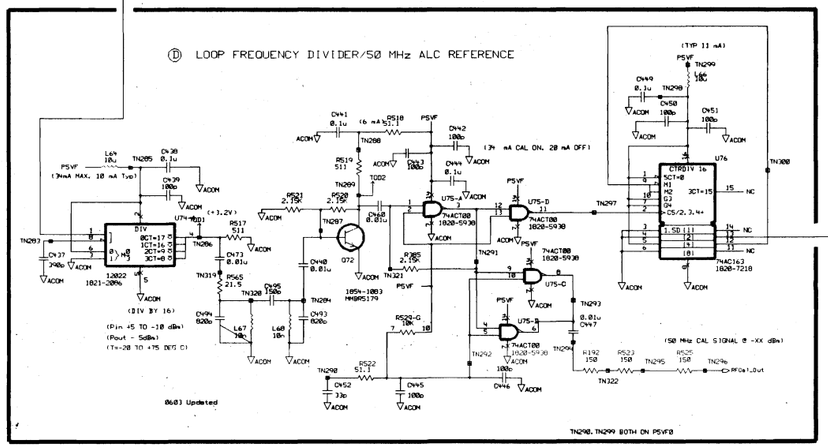

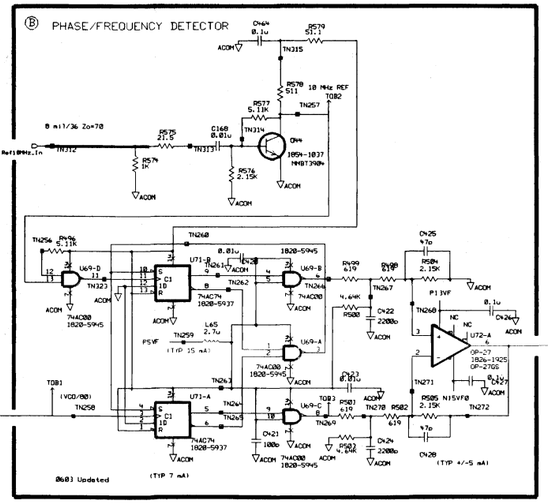

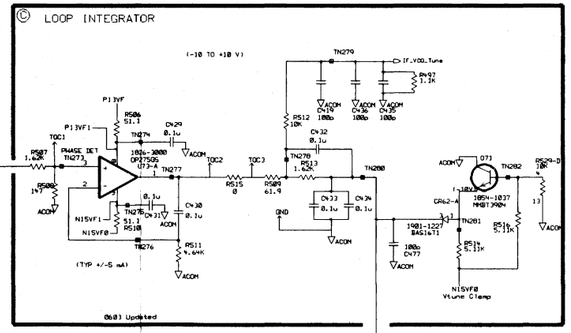

LAST TN324

TP● : PM062040 VIA
GND: PM080056 VIA

HP PROPRIETARY
THIS DOCUMENT CONTAINS CONFIDENTIAL, PROPRIETARY INFORMATION THAT IS HEWLETT-PACKARD (HP) PROPERTY. DO NOT DISCLOSE TO OR DUPLICATE FOR OTHERS EXCEPT AS AUTHORIZED BY HP.

LAST CHECKED	BATE	SCHEMATIC, PWA TRACKING GENERATOR RF BOARD IF OSCILLATOR	HEWLETT PACKARD 5100
ENGINEER	SHEET 1 OF 1	TITLE	
DRAWN BY	SIZE D	HP_MOSO_TG/prod_75ohm/rf_board/if.sec sheet1 PATHNAME	E4402-60004 PART NUMBER
	AA3637 ASSY. REV	A3637 BRD. REV PAGE 2 OF 11	D-E4402-60004-1 DWG. NO.

REVISIONS
SEE PAGE 1 FOR REVISION HISTORY

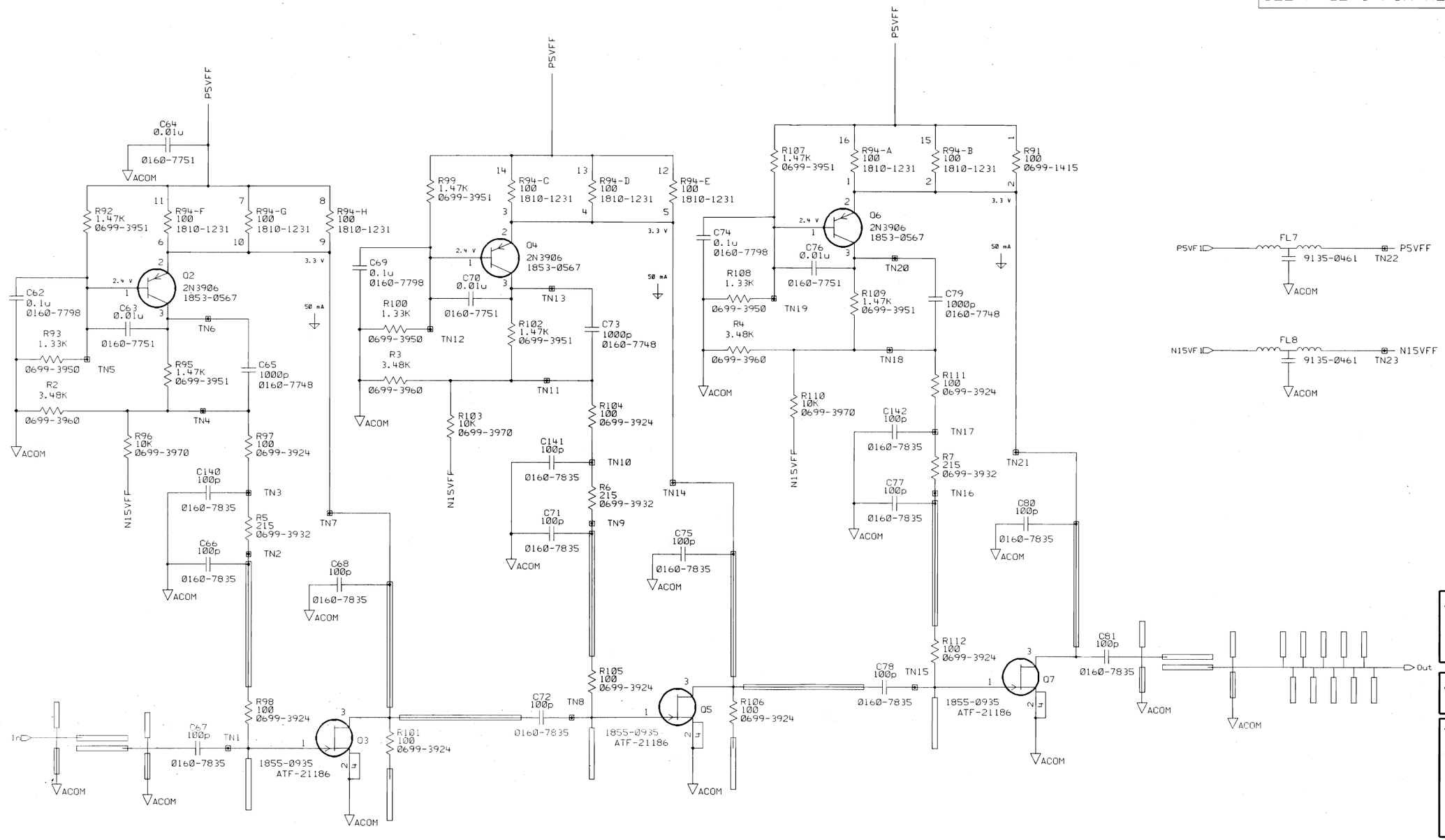

Measurement Conditions
Frequency: 50 MHz CW
Amplitude: -10 dBm
Output Atten: 0dB
Modulation: Off
Room Temp ~25 Deg C

Test Points
TP xxx-xxx
TN1-TN23

Reference Designators:
C62-81, C140-C142
CR: None
DS: None
FL7-FL8
J: None
L: None
Q2-Q7
R2-R7, R92-R112
U: None

HP PROPRIETARY
THIS DOCUMENT CONTAINS CONFIDENTIAL. PROPRIETARY INFORMATION THAT IS HEWLETT-PACKARD (HP) PROPERTY. DO NOT DISCLOSE TO OR DUPLICATE FOR OTHERS EXCEPT AS AUTHORIZED BY HP.

LAST CHECKED	DATE	SCHEMATIC, PWA TRACKING GENERATOR RF BOARD LO AMPLIFIER	HEWLETT PACKARD 5300
ENGINEER	SHEET 1 OF 1	TITLE	
DRAWN BY	SIZE B	$HP_MID/economy/E4402/60004/AB3733/ rf_board/lo_amp sheet1 PATHNAME	E4402-60004 PART NUMBER
	AB3733 ASSY. REV	A3637 BRD. REV / PAGE 3 OF 11	B-E4402-60004-1 DWG. NO.

REVISIONS
SEE PAGE 1 FOR REVISION HISTORY

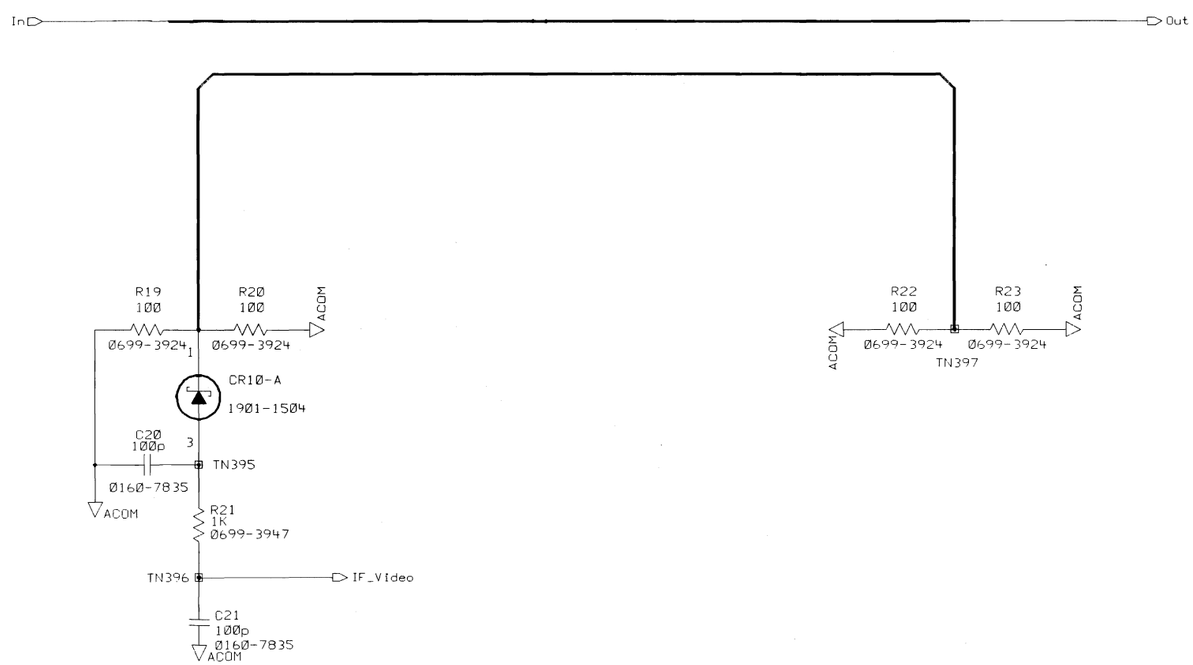

Measurement Conditions
Frequency: 50 MHz CW
Amplitude: -10 dBm
Output Atten: 0dB
Modulation: Off
Room Temp ~25 Deg C

Test Points
TP xxx-xxx
TN395-TN397

Reference Designators:
C20-C21
CR10
DS: None
FL: None
J: None
L: None
Q: None
R19-R23
U: None

HP PROPRIETARY
THIS DOCUMENT CONTAINS CONFIDENTIAL. PROPRIETARY INFORMATION THAT IS HEWLETT-PACKARD (HP) PROPERTY. DO NOT DISCLOSE TO OR DUPLICATE FOR OTHERS EXCEPT AS AUTHORIZED BY HP.

LAST CHECKED	DATE	SCHEMATIC. PWA TRACKING GENERATOR RF BOARD IF COUPLER / DET	HEWLETT PACKARD 5300
ENGINEER	SHEET 1 OF 1	TITLE	
DRAWN BY	SIZE B	$HP_MID/economy/E4402/60004/AB3733/ rf_board/if_coup sheet1 PATHNAME	E4402-60004 PART NUMBER
	AB3733 ASSY. REV	A3637 BRD. REV PAGE 4 OF 11	B-E4402-60004-1 DWG. NO.

REVISIONS
SEE PAGE 1 FOR REVISION HISTORY

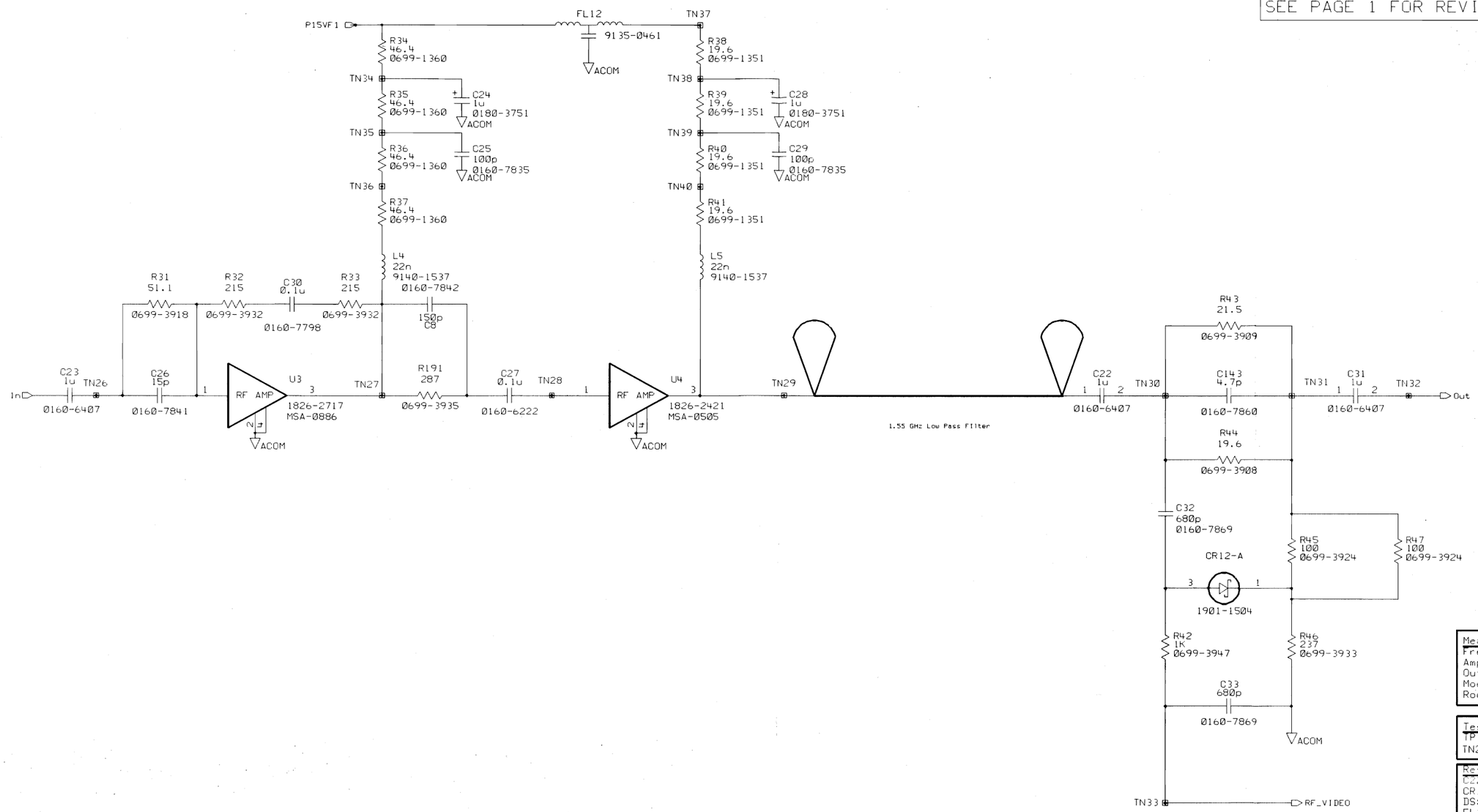

Measurement Conditions
Frequency: 50 MHz CW
Amplitude: -10 dBm
Output Atten: 0dB
Modulation: Off
Room Temp ~25 Deg C

Test Points
TP xxx-xxx
TN25-TN40

Reference Designators:
C22-C33
CR12
DS: None
FL12
J: None
L4-L5
Q: None
R34-R47
U3-U4

HP PROPRIETARY
THIS DOCUMENT CONTAINS CONFIDENTIAL, PROPRIETARY INFORMATION THAT IS HEWLETT-PACKARD (HP) PROPERTY. DO NOT DISCLOSE TO OR DUPLICATE FOR OTHERS EXCEPT AS AUTHORIZED BY HP.

LAST CHECKED	DATE	SCHEMATIC, PWA TRACKING GENERATOR RF Board	HEWLETT PACKARD 5300
ENGINEER	SHEET 1 OF 1	TITLE: RF Amplifier / RF Bridge	
DRAWN BY	SIZE B	PATHNAME: $HP_MID/economy/E4402/60004/AB3733/rf_board/rf_amp sheet1	E4402-60004 PART NUMBER
	AB3733 ASSY. REV	A3637 BRD. REV; PAGE 5 OF 11	B-E4402-60004-1 DWG. NO.

Scans by ArtekMedia => 2009

REVISIONS
SEE PAGE 1 FOR REVISION HISTORY

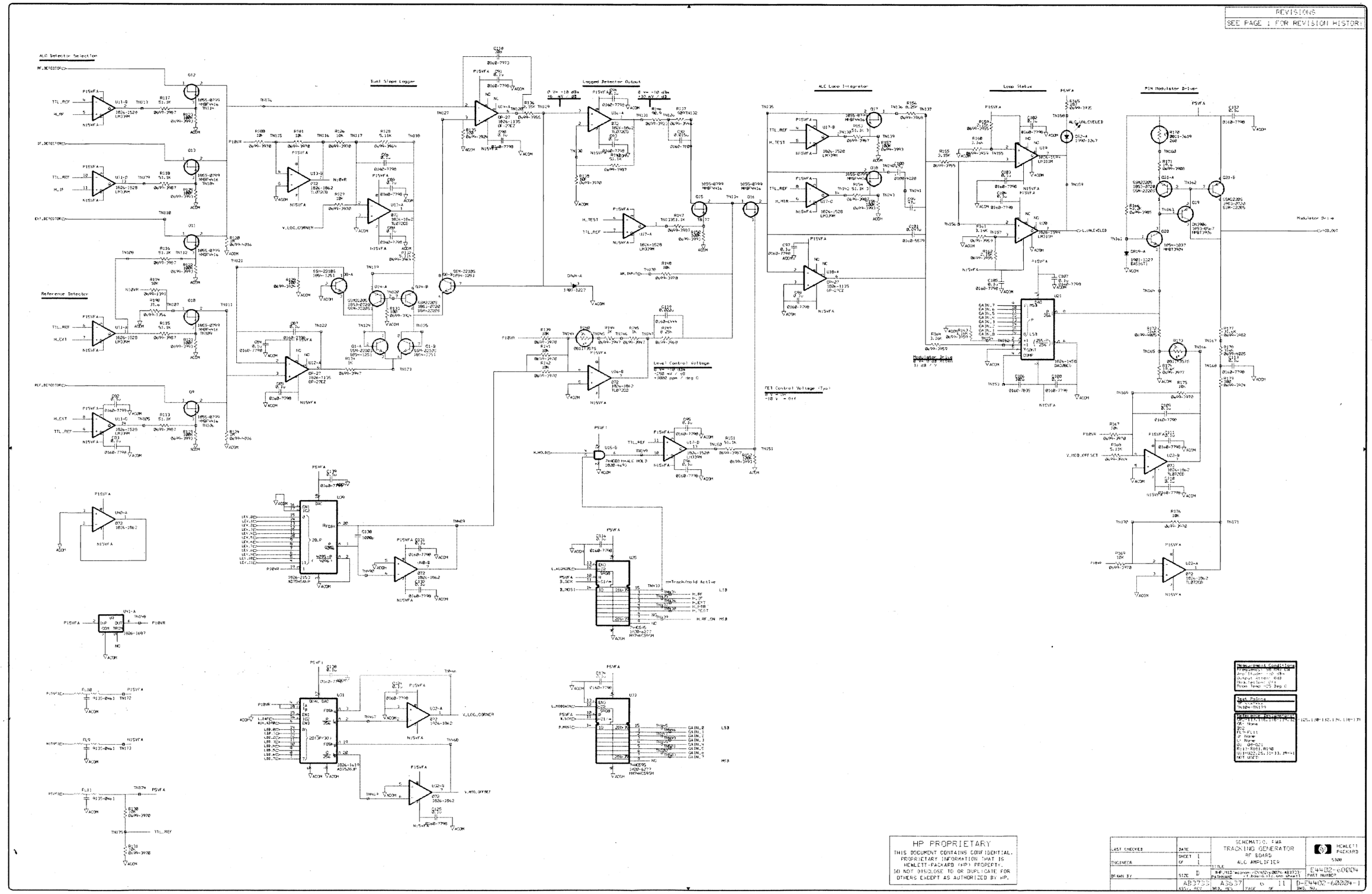

REVISIONS
SEE PAGE 1 FOR REVISION HISTORY

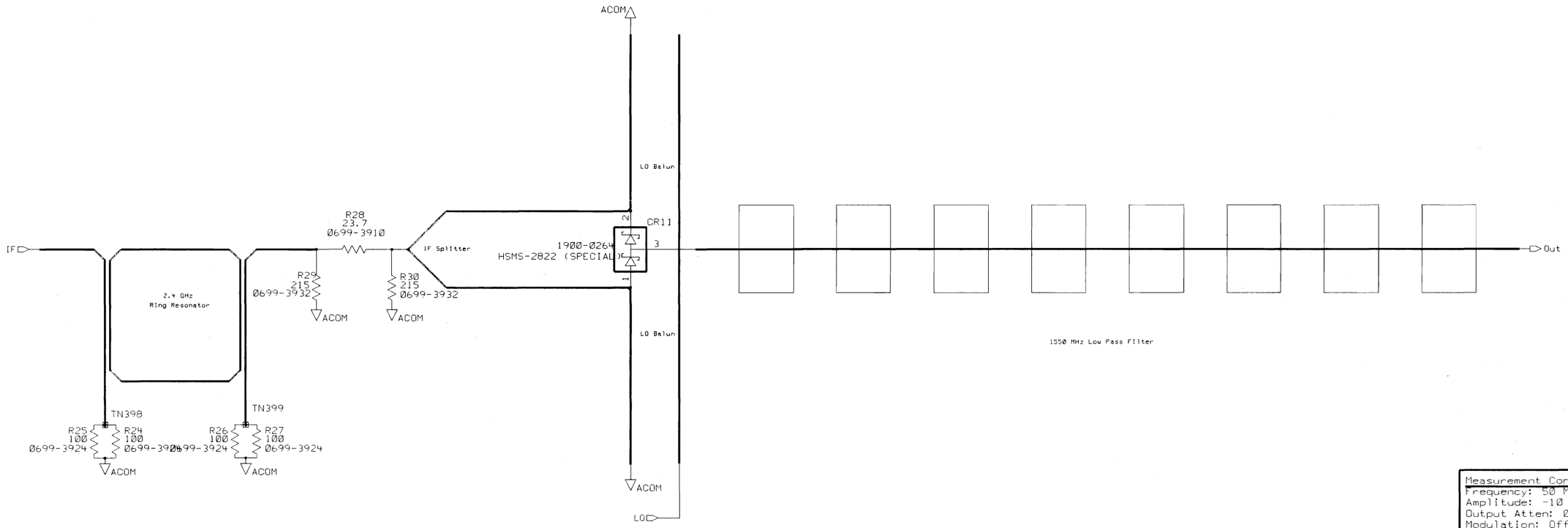

Measurement Conditions
Frequency: 50 MHz CW
Amplitude: -10 dBm
Output Atten: 0dB
Modulation: Off
Room Temp ~25 Deg C

Test Points
TP xxx-xxx
TN398-TN399

Reference Designators:
C: None
CR11
DS: None
FL: None
J: None
L: None
Q: None
R24- R30
U: None

HP PROPRIETARY

THIS DOCUMENT CONTAINS CONFIDENTIAL. PROPRIETARY INFORMATION THAT IS HEWLETT-PACKARD (HP) PROPERTY. DO NOT DISCLOSE TO OR DUPLICATE FOR OTHERS EXCEPT AS AUTHORIZED BY HP.

LAST CHECKED	DATE	SCHEMATIC, PWA TRACKING GENERATOR RF BOARD RF CONVERTER	HEWLETT PACKARD 5300
ENGINEER	SHEET 1 OF 1	TITLE	
DRAWN BY	SIZE B	$HP_MID/economy/E4402/60004/AB3733/ PATHNAME rf_board/trakconv sheet1	E4402-60004 PART NUMBER
	AB3733 ASSY. REV	A3637 BRD. REV · PAGE 7 OF 11	B-E4402-60004-1 DWG. NO.

Scans by ArtekMedia => 2009

REVISIONS
SEE PAGE 1 FOR REVISION HISTORY

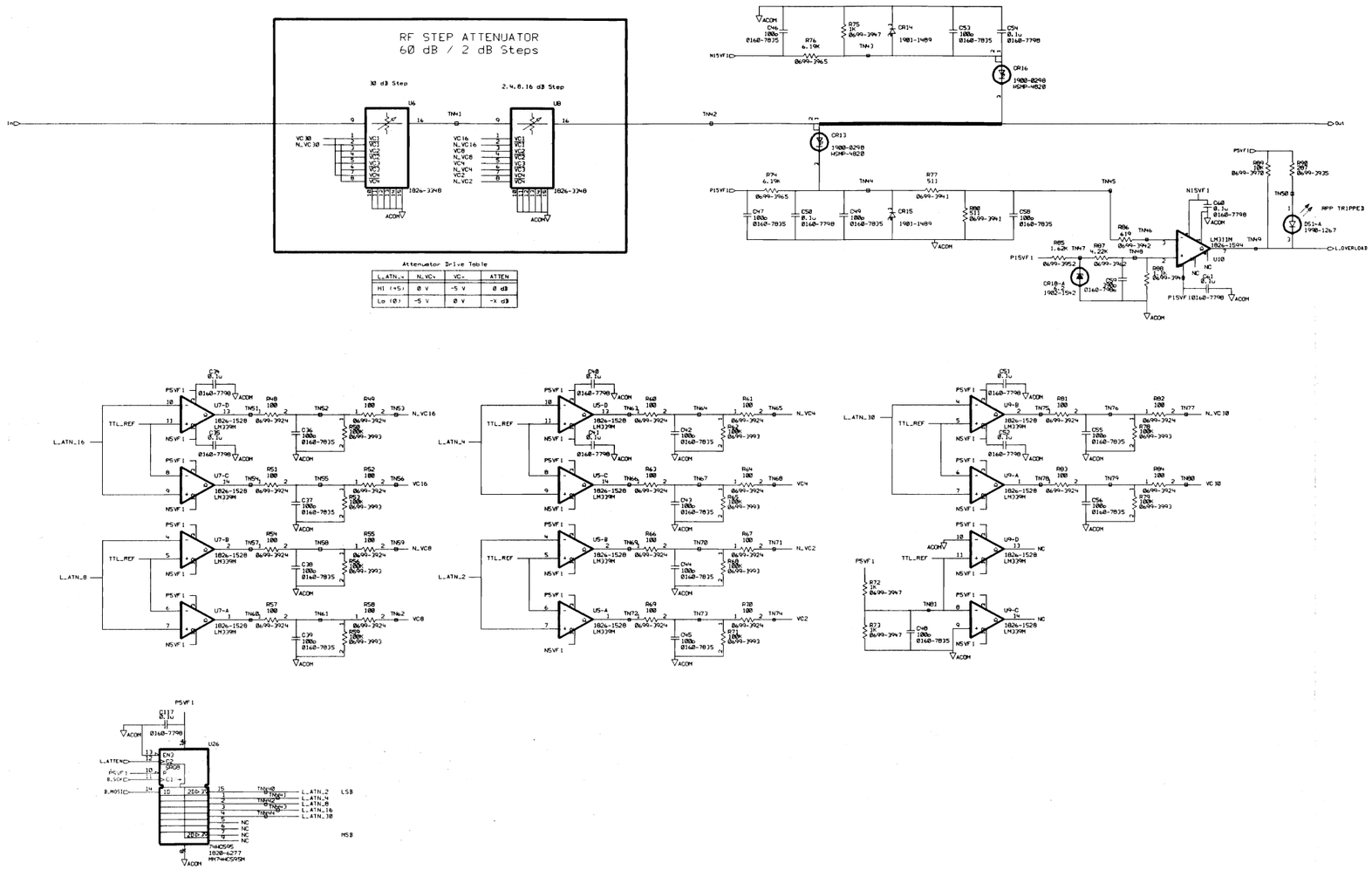

REVISIONS
SEE PAGE 1 FOR REVISION HISTORY

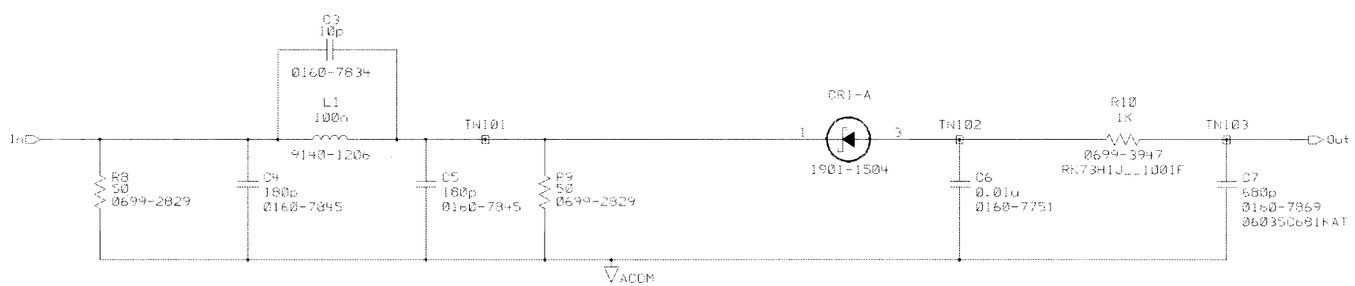

Measurement Conditions
Frequency: 50 MHz CW
Amplitude: -10 dBm
Output Atten: 0dB
Modulation: Off
Room Temp ~25 Deg C

Test Points
TP xxx-xxx
TN101-TN103

Reference Designators:
C3-C7
CR1
DS: None
FL: None
J: None
L1
Q: None
R9-R10
U: None

HP PROPRIETARY

THIS DOCUMENT CONTAINS CONFIDENTIAL. PROPRIETARY INFORMATION THAT IS HEWLETT-PACKARD (HP) PROPERTY. DO NOT DISCLOSE TO OR DUPLICATE FOR OTHERS EXCEPT AS AUTHORIZED BY HP.

LAST CHECKED	DATE	SCHEMATIC, PWA TRACKING GENERATOR RF BOARD ALC REFERENCE TITLE	HEWLETT PACKARD 5300
ENGINEER	SHEET 1 OF 1		
DRAWN BY	SIZE B		E4402-60004 PART NUMBER
	AB3733 ASSY. REV	A3637 BRD. REV PAGE 9 OF 11	B-E4402-60004-1 DWG. NO.

Scans by ArtekMedia => 2009

REVISIONS
SEE PAGE 1 FOR REVISION HISTORY

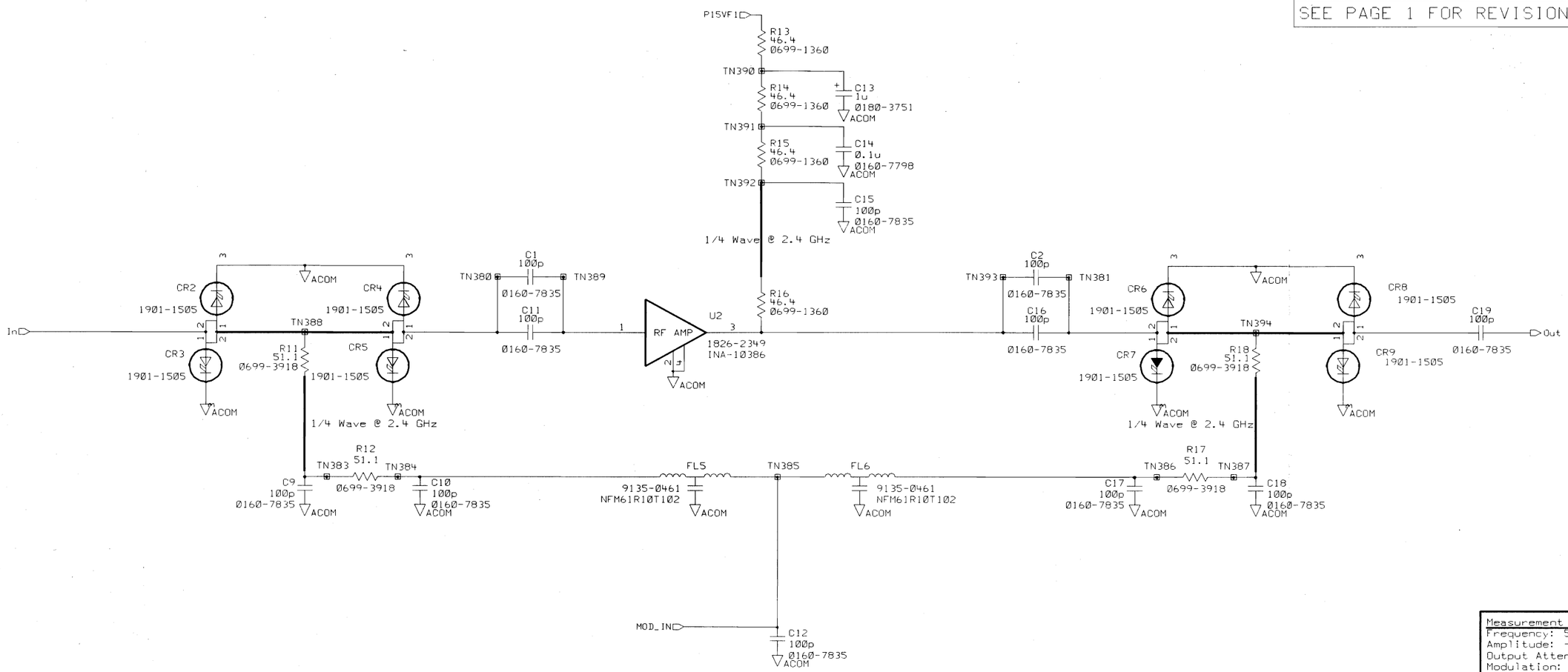

Measurement Conditions
Frequency: 50 MHz CW
Amplitude: -10 dBm
Output Atten: 0dB
Modulation: Off
Room Temp ~25 Deg C

Test Points
TP xxx-xxx
TN379-TN394

Reference Designators:
C1-C2,C9-C19
CR2-CR9
DC: None
FL5-FL6
J: None
L: None
Q: None
R11-R18
U2

HP PROPRIETARY
THIS DOCUMENT CONTAINS CONFIDENTIAL. PROPRIETARY INFORMATION THAT IS HEWLETT-PACKARD (HP) PROPERTY. DO NOT DISCLOSE TO OR DUPLICATE FOR OTHERS EXCEPT AS AUTHORIZED BY HP.

LAST CHECKED	DATE	SCHEMATIC, PWA TRACKING GENERATOR RF BOARD AMP MODULATOR	HEWLETT PACKARD 5300
ENGINEER	SHEET 1 OF 1	TITLE	
DRAWN BY	SIZE B	$HP_MID/economy/E4402/60004/AB3733/ rf_board/modulator sheet1 PATHNAME	E4402-60004 PART NUMBER
	AB3733 ASSY. REV	A3637 BRD. REV	10 11 PAGE OF	B-E4402-60004-1 DWG. NO.

REVISIONS
SEE PAGE 1 FOR REVISION HISTORY

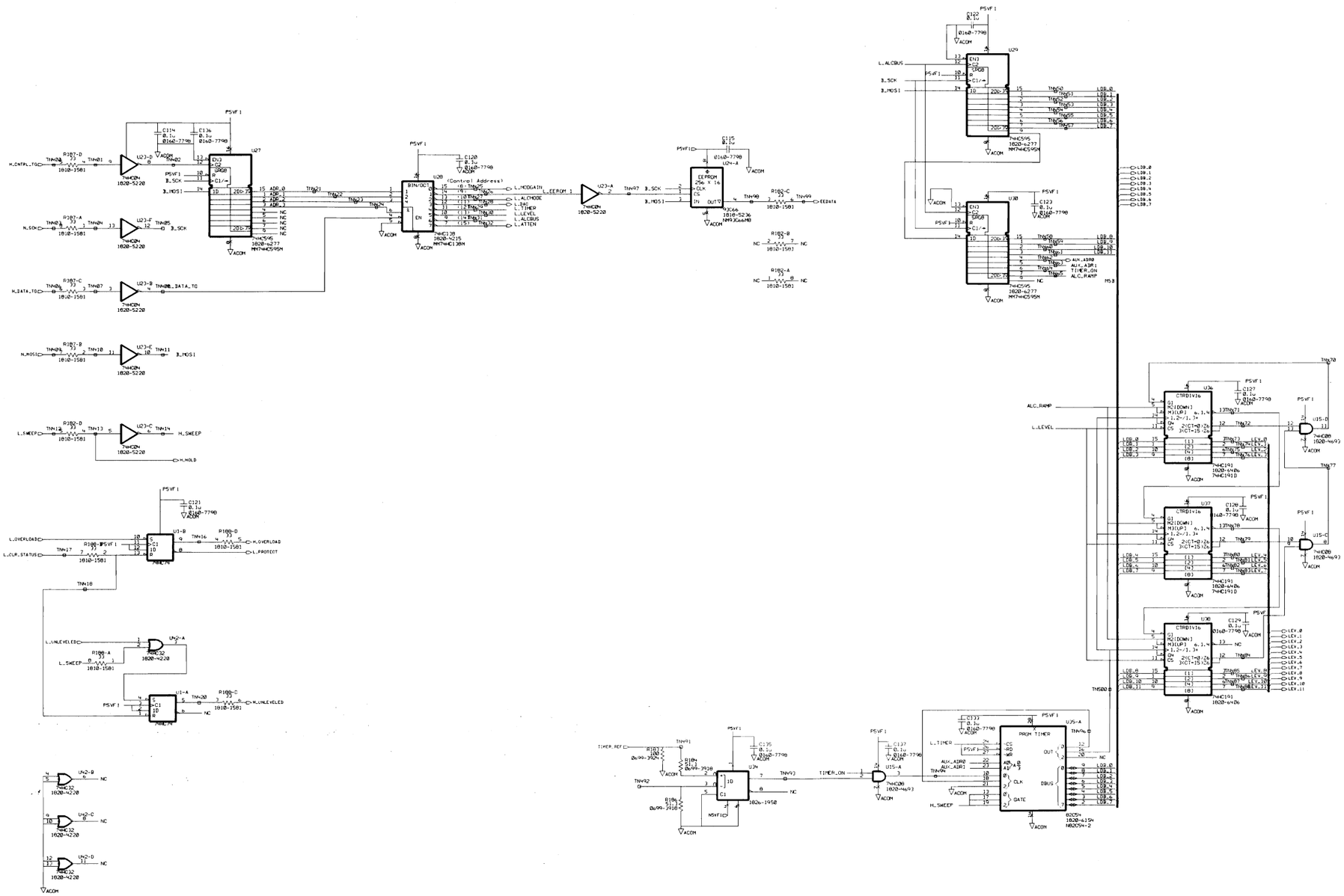

Measurement Conditions
Frequency: 50 MHz CW
Amplitude: -10 dBm
Output Atten: 0dB
Modulation: Off
Room Temp: 25 Deg C

Test Points
TP:
TN40-TN16, TN46-TN18, TN20-TN50

Reference Designators
U114-U139
CR: None
BT: None
FL: None
J: None
L: None
Q: None
R182-R186, R189
U23-U48

HP PROPRIETARY
THIS DOCUMENT CONTAINS CONFIDENTIAL, PROPRIETARY INFORMATION THAT IS HEWLETT-PACKARD (HP) PROPERTY. DO NOT DISCLOSE TO OR DUPLICATE FOR OTHERS EXCEPT AS AUTHORIZED BY HP.

LAST CHECKED	DATE	SCHEMATIC, PWA TRACKING GENERATOR RF BOARD DIGITAL INTERFACE	HEWLETT PACKARD 5300
ENGINEER	SHEET 1 OF 1	TITLE	E4402-60004
DRAWN BY	SIZE D	HP_MID/eeomas/E4402/60004/AB3733/ PATHNAME rf_board/rf_digital sheet1	PART NUMBER
	AB3733 ASSY. REV	A3637 BOM REV	11 11 PAGE OF REV. REV. D-E4402-60004-1 DWG. NO.

Scans by ArtekMedia => 2009

Component-Level Information Packet for E4401-60005

1.5 GHz Tracking Generator Output (50 Ohm)

Agilent Technologies

Agilent Part Number: E4401-90032
Printed in Malaysia April 2001

Notice

The information contained in this document is subject to change without notice. Agilent Technologies makes no warranty of any kind with regard to this material, including but not limited to, the implied warranties of merchantability and fitness for a particular purpose. Agilent Technologies shall not be liable for errors contained herein or for incidental or consequential damages in connection with the furnishing, performance, or use of this material.

© Copyright Agilent Technologies Inc. 2000, 2001
All Rights Reserved. Reproduction, adaptation, or translation without prior written permission is prohibited, except as allowed under the copyright laws.

Scans by ArtekMedia => 2009

Agilent Part Number E4401-60005
1.5 Tracking Generator Output (50 Ohm)

Reference Designator	Agilent Part Number	Qty	Description	Mgr Code	Mfr Part Number
C1	0160-8149	1	CAP-FXD 1uF +-20% 100 V CER X7R	03553	ATC900C105MW100
C2	0160-7798	1	CAP-FXD 0.1uF +-10% 50 V CER X7R	06352	C2012X7R1H104K
J1	1250-1367	1	CONNECTOR-RF SM-SLD FEMALE PC-W/O-STDF	04486	52-052-0000
K1	0490-2304	1	RELAY 1A	04501	5000-0266
MP2	E4401-60044	1	04C .05M 04F-NON	28480	E4401-60044
Q1	1853-0727	1	TRANSISTOR PNP SI SOT-23 (TO-236AB)	36633	MMBT6520LT1
Q2	1853-0727	1	TRANSISTOR PNP SI SOT-23 (TO-236AB)	36633	MMBT6520LT1
R1	0699-3956	1	RESISTOR 2.37K +-1% .063W TKF TC0+-200	09891	RK73H1J2371F
R2	0699-3947	1	RESISTOR 1K +-1% .063W TKF TC0+-200	00746	MCR03-F-1001
R3	0699-3950	1	RESISTOR 1.33K +-1% .063W TKF TC0+-200	09891	RK73H1J1331F
R4	0699-4010	1	RESISTOR 511K +-1% .063W TKF TC0+-200	09891	RK73H1J5113F
R5	0699-4010	1	RESISTOR 511K +-1% .063W TKF TC0+-200	09891	RK73H1J5113F
R6	0699-4010	1	RESISTOR 511K +-1% .063W TKF TC0+-200	09891	RK73H1J5113F
VR1	1901-1476	1	DIODE-V-SUPPR 219V D0-214AA	36633	P6SMB160AT3

**Indicates factory-selected value*

5300 C-E4401-60005-2

SYM	REVISIONS	APPROVED	DATE
A	AS ISSUED /RO		

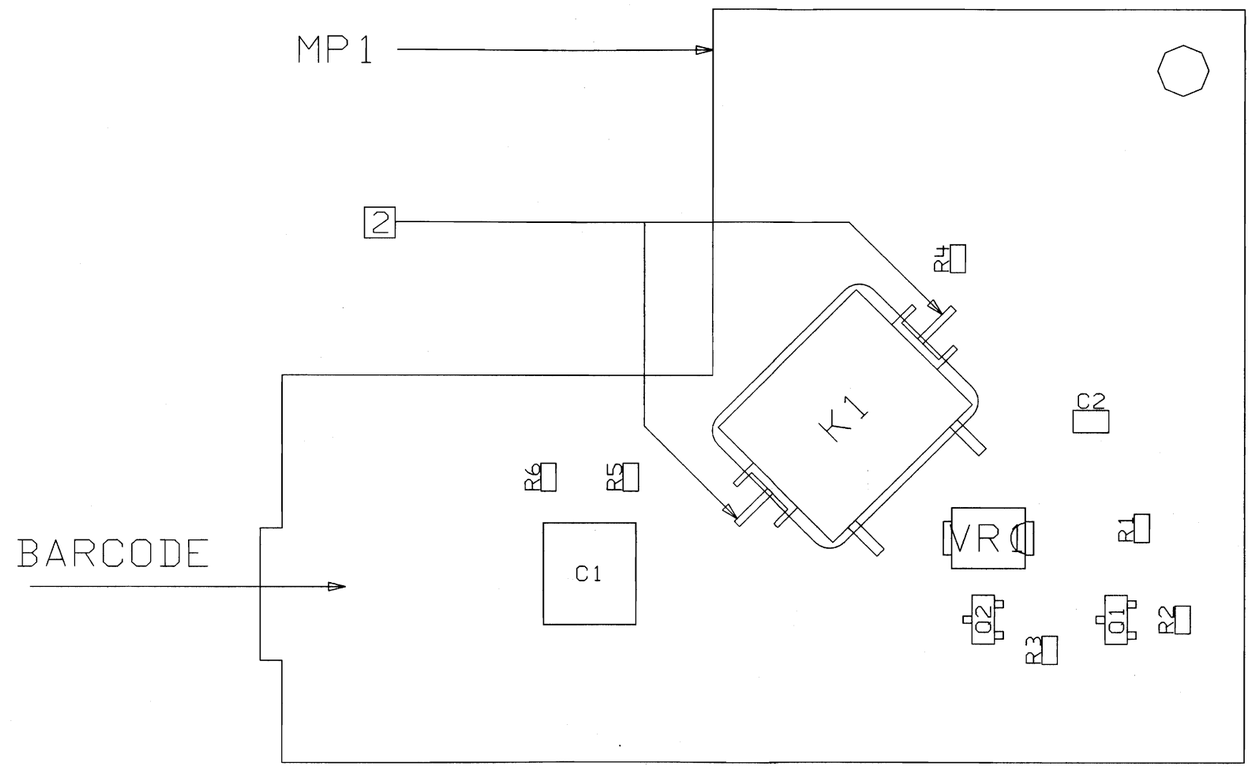

TOP SIDE

NOTE: (UNLESS OTHERWISE SPECIFIED)

1 USE RAW BOARD E4401-20005

2 LEADS MUST LIE FLAT ON BOARD AND BE COMPLETELY SOLDERED TWO PLACES.

SEE MATERIAL LIST E4401-60005

HP PROPRIETARY
THIS DOCUMENT CONTAINS CONFIDENTIAL, PROPRIETARY INFORMATION THAT IS HEWLETT-PACKARD (HP) PROPERTY. DO NOT DISCLOSE TO OR DUPLICATE FOR OTHERS EXCEPT AS AUTHORIZED BY HP.

UNLESS OTHERWISE SPECIFIED, DIMENSIONS ARE IN INCHES.
TOLERANCES: XX.XXX ±.010 XX.XX ±.02
THIRD ANGLE PROJECTION
DO NOT SCALE THIS DRAWING

DRAWN BY DATE
ENGINEER/CHECKER DATE
RELEASE TO PROD. DATE
SUPERSEDES DWG.

ASSEMBLY, PWB
TITLE

a1aea005 FILENAME
SCALE NONE
SHEET 1 OF 2
HEWLETT PACKARD
E4401-60005 PART NUMBER
C-E4401-60005-2

Scans by ArtekMedia => 2009

5300 C-E4401-60005-2

SYM	REVISIONS	APPROVED	DATE
1			

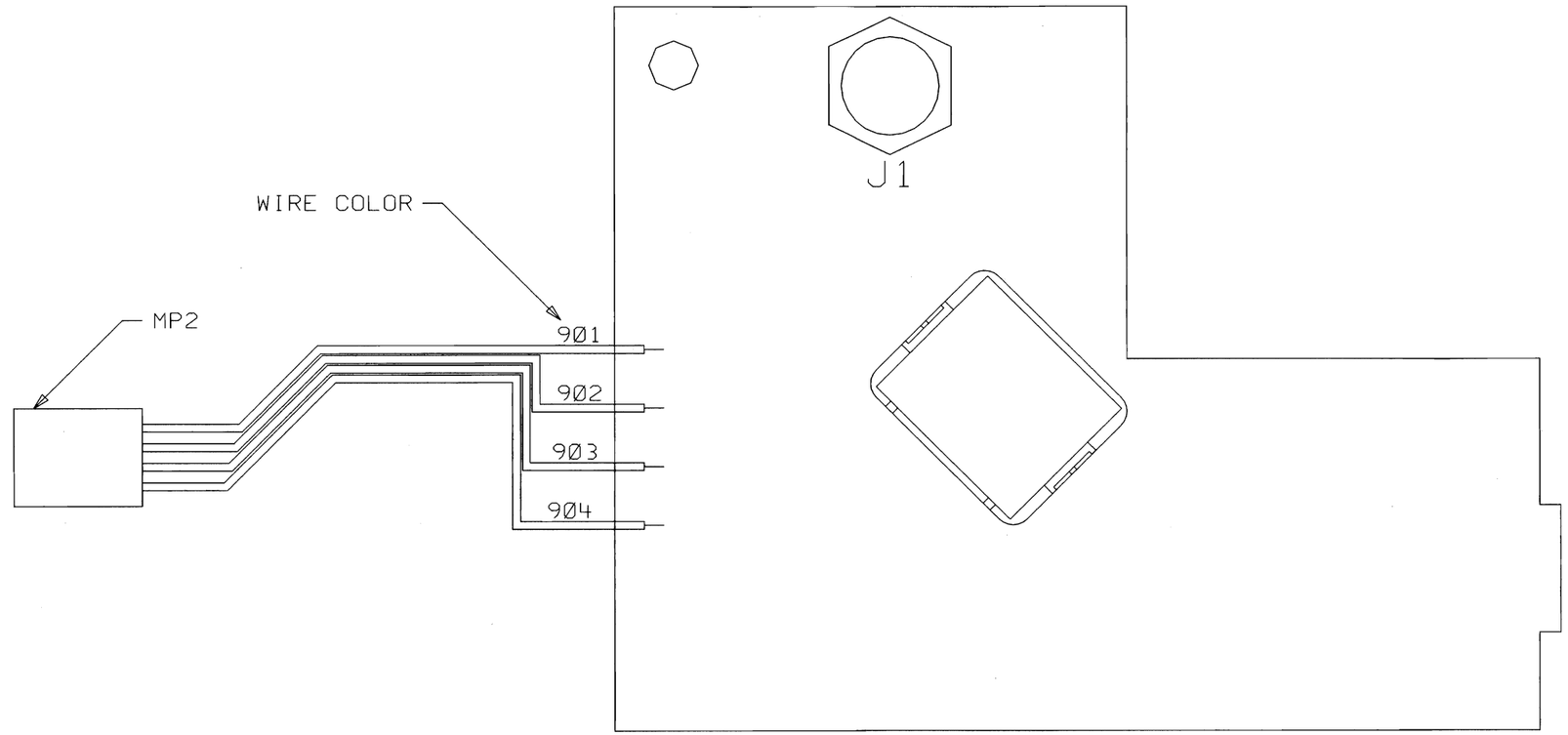

BOTTOM SIDE

SEE MATERIAL LIST E4401-60005

HP PROPRIETARY
THIS DOCUMENT CONTAINS CONFIDENTIAL, PROPRIETARY INFORMATION THAT IS HEWLETT-PACKARD (HP) PROPERTY. DO NOT DISCLOSE TO OR DUPLICATE FOR OTHERS EXCEPT AS AUTHORIZED BY HP.

UNLESS OTHERWISE SPECIFIED, DIMENSIONS ARE IN INCHES.
TOLERANCES: XX.XXX ±.010 XX.XX ±.02
THIRD ANGLE PROJECTION
DO NOT SCALE THIS DRAWING

DRAWN BY — DATE
ENGINEER/CHECKER — DATE
RELEASE TO PROD. — DATE
SUPERSEDES DWG.

ASSEMBLY, PWB
TITLE

a6aea005 FILENAME
NONE SCALE
SHEET 2 OF 2
HEWLETT PACKARD
E4401-60005 PART NUMBER
C-E4401-60005-2

5300 AA3636 B-E4401-60005-1

SYM	REVISIONS	APPROVED	DATE
A	AS ISSUED /RO		

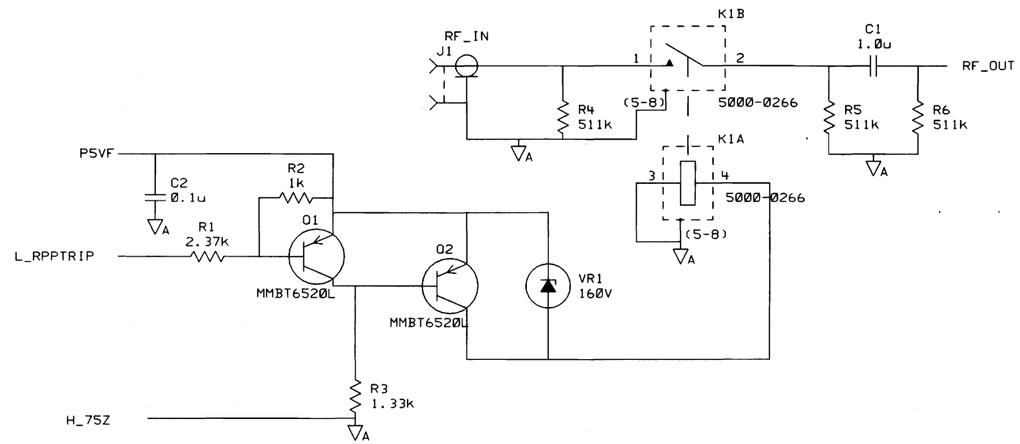

HP PROPRIETARY IGNORE
THIS DOCUMENT CONTAINS CONFIDENTIAL, PROPRIETARY INFORMATION THAT IS HEWLETT-PACKARD (HP) PROPERTY. DO NOT DISCLOSE TO OR DUPLICATE FOR OTHERS EXCEPT AS AUTHORIZED BY HP.

DRAWN BY	DATE	SCHEMATIC, PWA	s1aea005 FILENAME
ENGINEER/CHECKER	DATE		SCALE NONE
RELEASE TO PROD.	DATE		SHEET 1 OF 1
SUPERSEDES DWG.		TITLE	B-E4401-60005-1

HEWLETT PACKARD

E4401-60005 PART NUMBER

Scans by ArtekMedia => 2009

Component-Level Information Packet for E4402-60005

1.5 GHz Tracking Generator Output (75 Ohm)

Agilent Technologies

Agilent Part Number: E4402-90022

Printed in Malaysia April 2001

Notice

The information contained in this document is subject to change without notice. Agilent Technologies makes no warranty of any kind with regard to this material, including but not limited to, the implied warranties of merchantability and fitness for a particular purpose. Agilent Technologies shall not be liable for errors contained herein or for incidental or consequential damages in connection with the furnishing, performance, or use of this material.

© Copyright Agilent Technologies Inc. 2000, 2001
All Rights Reserved. Reproduction, adaptation, or translation without prior written permission is prohibited, except as allowed under the copyright laws.

Scans by ArtekMedia => 2009

Agilent Part Number E4402-60005
1.5 GHz Tracking Generator Output (75 Ohm)

Reference Designator	Agilent Part Number	Qty	Description	Mgr Code	Mfr Part Number
C1	0160-8236	1	CAP-FXD 0.022uF +-10% 100 V CER X7R	03553	ATC0805X7R223KL 3A
C2	0160-7798	1	CAP-FXD 0.1uF +-10% 50 V CER X7R	06352	C2012X7R1H104K
J1	1250-1367	1	CONNECTOR-RF SM-SLD FEMALE PC-W/O-STDF	04486	52-052-0000
K1	0490-2304	1	RELAY 1A	04501	5000-0266
MP2	E4401-60044	1	04C .05M 04F-NON	28480	E4401-60044
Q1	1853-0727	1	TRANSISTOR PNP SI SOT-23 (TO-236AB)	36633	MMBT6520LT1
Q2	1853-0727	1	TRANSISTOR PNP SI SOT-23 (TO-236AB)	36633	MMBT6520LT1
R1	0699-3956	1	RESISTOR 2.37K +-1% .063W TKF TC0+-200	09891	RK73H1J2371F
R2	0699-3947	1	RESISTOR 1K +-1% .063W TKF TC0+-200	00746	MCR03-F-1001
R3	0699-3950	1	RESISTOR 1.33K +-1% .063W TKF TC0+-200	09891	RK73H1J1331F
R4	0699-3923	1	RESISTOR 90.9 +-1% .063W TKF TC0+-200	00746	MCR03-F-90R9
R5	0699-4010	1	RESISTOR 511K +-1% .063W TKF TC0+-200	09891	RK73H1J5113F
R6	0699-4010	1	RESISTOR 511K +-1% .063W TKF TC0+-200	09891	RK73H1J5113F
R7	0699-1366	1	RESISTOR 82.5 +-1% .125W TKF TC0+-100	05524	CRCW120682R5F
R8	0699-1367	1	RESISTOR 90.9 +-1% .125W TKF TC0+-100	05524	CRCW120690R9F
VR1	1901-1476	1	DIODE-V-SUPPR 219V D0-214AA	36633	P6SMB160AT3

**Indicates factory-selected value*

5300 C-E4402-60005-2

SYM	REVISIONS	APPROVED	DATE
A	AS ISSUED /RO	P BROWN	4-7-97

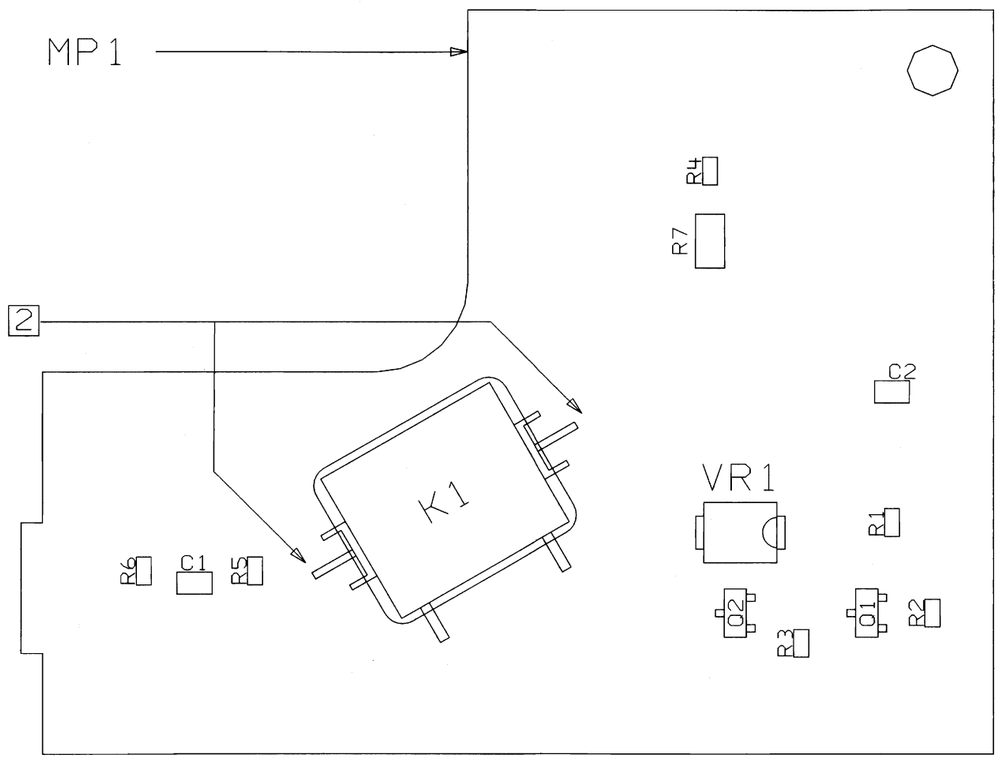

TOP SIDE

NOTE: (UNLESS OTHERWISE SPECIFIED)

1 USE RAW BOARD E4402-20005

2 LEADS MUST LIE FLAT ON BOARD AND BE COMPLETELY SOLDERED EIGHT PLACES (K1).

3 DO NOT APPLY BARCODE TO TOP SIDE

SEE MATERIAL LIST E4402-60005

HP PROPRIETARY
THIS DOCUMENT CONTAINS CONFIDENTIAL, PROPRIETARY INFORMATION THAT IS HEWLETT-PACKARD (HP) PROPERTY. DO NOT DISCLOSE TO OR DUPLICATE FOR OTHERS EXCEPT AS AUTHORIZED BY HP.

UNLESS OTHERWISE SPECIFIED, DIMENSIONS ARE IN INCHES.
TOLERANCES: XX.XXX ±.010 XX.XX ±.02
THIRD ANGLE PROJECTION
DO NOT SCALE THIS DRAWING

R ODAY DRAWN BY	4-7-97 DATE
PAT BROWN ENGINEER/CHECKER	4-7-97 DATE
RELEASE TO PROD.	DATE
SUPERSEDES DWG.	

ASSEMBLY, PWB TRACKING GEN OUTPUT/BABY BD 75 OHM Z OUTPUT
TITLE

alaep005 FILENAME
SCALE NONE
SHEET 1 OF 2
E4402-60005 PART NUMBER
C-E4402-60005-2

HEWLETT PACKARD

Scans by ArtekMedia => 2009

5300 C-E4402-60005-2

SYM	REVISIONS	APPROVED	DATE
A	AS ISSUED /RO	P BROWN	4-7-97

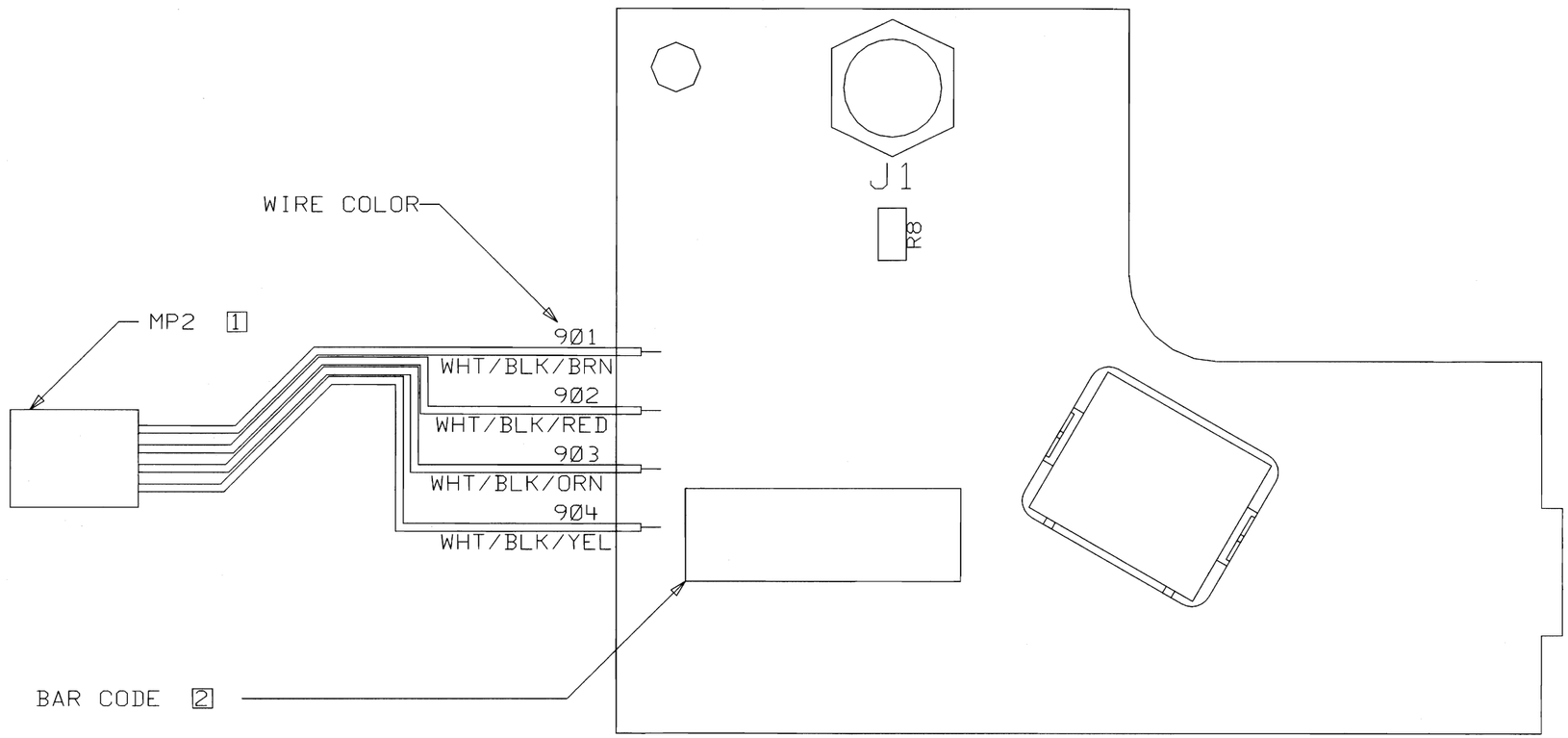

BOTTOM SIDE

NOTE UNLESS OTHERWISE SPECIFIED:

1) MP2 WIRES INSTALLED FROM BOTTOM SIDE

2) APPLY BARCODE LABEL IN AREA SHOWN, MAINTAIN CLEARANCE FROM MOUNTING PADS (UNMASKED)

SEE MATERIAL LIST E4402-60005

HP PROPRIETARY
THIS DOCUMENT CONTAINS CONFIDENTIAL, PROPRIETARY INFORMATION THAT IS HEWLETT-PACKARD (HP) PROPERTY. DO NOT DISCLOSE TO OR DUPLICATE FOR OTHERS EXCEPT AS AUTHORIZED BY HP.

UNLESS OTHERWISE SPECIFIED. DIMENSIONS ARE IN INCHES.
TOLERANCES: XX.XXX ±.010 XX.XX ±.02
THIRD ANGLE PROJECTION
DO NOT SCALE THIS DRAWING

R ODAY DRAWN BY	1-17-97 DATE
PAT BROWN ENGINEER/CHECKER	1-17-97 DATE
RELEASE TO PROD.	DATE
SUPERSEDES DWG.	

TITLE: ASSEMBLY, PWB TRACKING GEN OUTPUT/BABY BD 75 OHM Z OUT

a6aep005 FILENAME
NONE SCALE
SHEET 2 OF 2
HEWLETT PACKARD
E4402-60005 PART NUMBER
C-E4402-60005-2

5300 AA3715 B-E4402-60005-1

SYM	REVISIONS	APPROVED	DATE
A	AS ISSUED /RO		

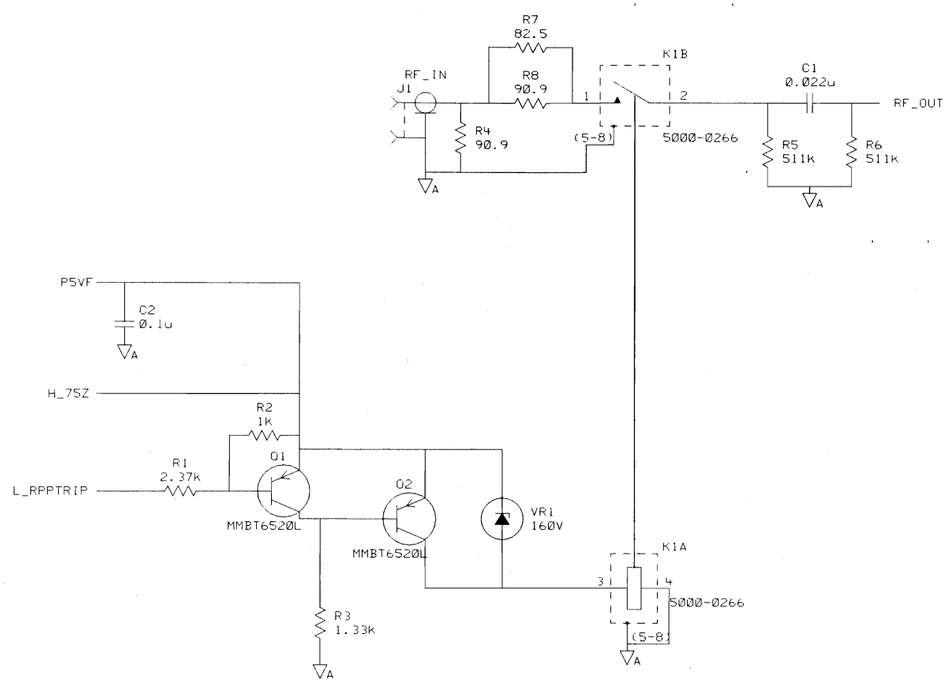

HP PROPRIETARY IGNORE

THIS DOCUMENT CONTAINS CONFIDENTIAL, PROPRIETARY INFORMATION THAT IS HEWLETT-PACKARD (HP) PROPERTY. DO NOT DISCLOSE TO OR DUPLICATE FOR OTHERS EXCEPT AS AUTHORIZED BY HP.

DRAWN BY	DATE	SCHEMATIC, PWA	filename FILENAME
ENGINEER/CHECKER	DATE		SCALE NONE
RELEASE TO PROD.	DATE		SHEET 1 OF 1
SUPERSEDES DWG.		TITLE	B-E4402-60005-1

HEWLETT PACKARD

E4402-60005 PART NUMBER

Scans by ArtekMedia => 2009

Component-Level Information Packet for E4401-60183

21.4 MHz IF

Agilent Technologies

Agilent Part Number: E4401-90164
Printed in Malaysia April 2001

Notice

The information contained in this document is subject to change without notice. Agilent Technologies makes no warranty of any kind with regard to this material, including but not limited to, the implied warranties of merchantability and fitness for a particular purpose. Agilent Technologies shall not be liable for errors contained herein or for incidental or consequential damages in connection with the furnishing, performance, or use of this material.

© Copyright Agilent Technologies Inc. 2000, 2001
All Rights Reserved. Reproduction, adaptation, or translation without prior written permission is prohibited, except as allowed under the copyright laws.

Scans by ArtekMedia => 2009

Agilent Part Number E4401-60183
21.4 MHz IF

Reference Designator	HP Part Number	Qty	Description	Mgr Code	Mfr Part Number
C1	0180-4228	1	CAP-FXD 47uF +-20% 10 V TA	02010	TAJD476M010
C2	0180-4287	1	CAP-FXD 10uF +-20% 35 V TA	02010	TAJD106M035
C3	0180-4287	1	CAP-FXD 10uF +-20% 35 V TA	02010	TAJD106M035
C4	0180-4228	1	CAP-FXD 47uF +-20% 10 V TA	02010	TAJD476M010
C50	0160-7751	1	CAP-FXD 0.01uF +-10% 50 V CER X7R	02010	06035C103KAT
C51	0160-7751	1	CAP-FXD 0.01uF +-10% 50 V CER X7R	02010	06035C103KAT
C52	0160-7751	1	CAP-FXD 0.01uF +-10% 50 V CER X7R	02010	06035C103KAT
C53	0160-7751	1	CAP-FXD 0.01uF +-10% 50 V CER X7R	02010	06035C103KAT
C54	0160-7775	1	CAP-FXD 5.6pF +-4.5% 50 V CER C0G	02010	06035A5R6CAT
C55	0160-7751	1	CAP-FXD 0.01uF +-10% 50 V CER X7R	02010	06035C103KAT
C56	0160-7751	1	CAP-FXD 0.01uF +-10% 50 V CER X7R	02010	06035C103KAT
C57	0160-7751	1	CAP-FXD 0.01uF +-10% 50 V CER X7R	02010	06035C103KAT
C58	0160-7751	1	CAP-FXD 0.01uF +-10% 50 V CER X7R	02010	06035C103KAT
C59	0160-7751	1	CAP-FXD 0.01uF +-10% 50 V CER X7R	02010	06035C103KAT
C60	0160-7751	1	CAP-FXD 0.01uF +-10% 50 V CER X7R	02010	06035C103KAT
C61	0160-7751	1	CAP-FXD 0.01uF +-10% 50 V CER X7R	02010	06035C103KAT
C62	0160-7751	1	CAP-FXD 0.01uF +-10% 50 V CER X7R	02010	06035C103KAT
C63	0160-7775	1	CAP-FXD 5.6pF +-4.5% 50 V CER C0G	02010	06035A5R6CAT
C64	0160-7751	1	CAP-FXD 0.01uF +-10% 50 V CER X7R	02010	06035C103KAT
C100	0160-7751	1	CAP-FXD 0.01uF +-10% 50 V CER X7R	02010	06035C103KAT
C101	0160-7751	1	CAP-FXD 0.01uF +-10% 50 V CER X7R	02010	06035C103KAT
C102	0160-7751	1	CAP-FXD 0.01uF +-10% 50 V CER X7R	02010	06035C103KAT
C103	0160-7751	1	CAP-FXD 0.01uF +-10% 50 V CER X7R	02010	06035C103KAT
C104	0160-7751	1	CAP-FXD 0.01uF +-10% 50 V CER X7R	02010	06035C103KAT
C105	0160-7751	1	CAP-FXD 0.01uF +-10% 50 V CER X7R	02010	06035C103KAT
C106	0160-7751	1	CAP-FXD 0.01uF +-10% 50 V CER X7R	02010	06035C103KAT
C107	0160-7751	1	CAP-FXD 0.01uF +-10% 50 V CER X7R	02010	06035C103KAT
C108	0160-7853	1	CAP-FXD 3.3pF +-7.6% 50 V CER C0G	02010	06035A3R3CAT

Agilent Part Number E4401-60183
21.4 MHz IF

Reference Designator	HP Part Number	Qty	Description	Mgr Code	Mfr Part Number
C109	0160-7751	1	CAP-FXD 0.01uF +-10% 50 V CER X7R	02010	06035C103KAT
C110	0160-7751	1	CAP-FXD 0.01uF +-10% 50 V CER X7R	02010	06035C103KAT
C111	0160-7751	1	CAP-FXD 0.01uF +-10% 50 V CER X7R	02010	06035C103KAT
C112	0160-7975	1	CAP-FXD 51pF +-5% 50 V CER C0G	06352	C1608COG1H510J
C113	0160-8218	1	CAP-FXD 200pF +-2% 300 V PORC	03553	ATC100B201GPN 300X
C114	0160-7751	1	CAP-FXD 0.01uF +-10% 50 V CER X7R	02010	06035C103KAT
C115	0160-7830	1	CAP-FXD 1pF +-25% 50 V CER C0G	12340	C0603C109C5GA C
C116	0160-7751	1	CAP-FXD 0.01uF +-10% 50 V CER X7R	02010	06035C103KAT
C117	0160-7751	1	CAP-FXD 0.01uF +-10% 50 V CER X7R	02010	06035C103KAT
C118	0160-7751	1	CAP-FXD 0.01uF +-10% 50 V CER X7R	02010	06035C103KAT
C119	0160-7751	1	CAP-FXD 0.01uF +-10% 50 V CER X7R	02010	06035C103KAT
C120	0160-7834	1	CAP-FXD 10pF +-5% 50 V CER C0G	02010	06035A100JAT
C121	0160-7751	1	CAP-FXD 0.01uF +-10% 50 V CER X7R	02010	06035C103KAT
C122	0160-7751	1	CAP-FXD 0.01uF +-10% 50 V CER X7R	02010	06035C103KAT
C123	0160-7798	1	CAP-FXD 0.1uF +-10% 50 V CER X7R	06352	C2012X7R1H104 K
C124	0160-7751	1	CAP-FXD 0.01uF +-10% 50 V CER X7R	02010	06035C103KAT
C125	0160-7751	1	CAP-FXD 0.01uF +-10% 50 V CER X7R	02010	06035C103KAT
C126	0160-7831	1	CAP-FXD 1.2pF +-20.83% 50 V CER C0G	02010	06035A1R2CAT
C127	0160-7861	1	CAP-FXD 47pF +-5% 50 V CER C0G	02010	06035A470JAT
C150	0160-7751	1	CAP-FXD 0.01uF +-10% 50 V CER X7R	02010	06035C103KAT
C151	0160-7751	1	CAP-FXD 0.01uF +-10% 50 V CER X7R	02010	06035C103KAT
C152	0160-7751	1	CAP-FXD 0.01uF +-10% 50 V CER X7R	02010	06035C103KAT
C153	0160-7751	1	CAP-FXD 0.01uF +-10% 50 V CER X7R	02010	06035C103KAT
C154	0160-7751	1	CAP-FXD 0.01uF +-10% 50 V CER X7R	02010	06035C103KAT
C155	0160-7751	1	CAP-FXD 0.01uF +-10% 50 V CER X7R	02010	06035C103KAT
C156	0160-7751	1	CAP-FXD 0.01uF +-10% 50 V CER X7R	02010	06035C103KAT
C157	0160-7853	1	CAP-FXD 3.3pF +-7.6% 50 V CER C0G	02010	06035A3R3CAT
C158	0160-7751	1	CAP-FXD 0.01uF +-10% 50 V CER X7R	02010	06035C103KAT

 **Indicates factory-selected value*

Scans by ArtekMedia => 2009

Agilent Part Number E4401-60183
21.4 MHz IF

Reference Designator	HP Part Number	Qty	Description	Mgr Code	Mfr Part Number
C159	0160-7751	1	CAP-FXD 0.01uF +-10% 50 V CER X7R	02010	06035C103KAT
C160	0160-7751	1	CAP-FXD 0.01uF +-10% 50 V CER X7R	02010	06035C103KAT
C161	0160-7751	1	CAP-FXD 0.01uF +-10% 50 V CER X7R	02010	06035C103KAT
C162	0160-7830	1	CAP-FXD 1pF +-25% 50 V CER C0G	12340	C0603C109C5GAC
C163	0160-7751	1	CAP-FXD 0.01uF +-10% 50 V CER X7R	02010	06035C103KAT
C164	0160-7751	1	CAP-FXD 0.01uF +-10% 50 V CER X7R	02010	06035C103KAT
C165	0160-7751	1	CAP-FXD 0.01uF +-10% 50 V CER X7R	02010	06035C103KAT
C166	0160-7751	1	CAP-FXD 0.01uF +-10% 50 V CER X7R	02010	06035C103KAT
C167	0160-7751	1	CAP-FXD 0.01uF +-10% 50 V CER X7R	02010	06035C103KAT
C168	0160-7834	1	CAP-FXD 10pF +-5% 50 V CER C0G	02010	06035A100JAT
C169	0160-7751	1	CAP-FXD 0.01uF +-10% 50 V CER X7R	02010	06035C103KAT
C170	0160-7751	1	CAP-FXD 0.01uF +-10% 50 V CER X7R	02010	06035C103KAT
C171	0160-7798	1	CAP-FXD 0.1uF +-10% 50 V CER X7R	06352	C2012X7R1H104K
C172	0160-7751	1	CAP-FXD 0.01uF +-10% 50 V CER X7R	02010	06035C103KAT
C173	0160-7751	1	CAP-FXD 0.01uF +-10% 50 V CER X7R	02010	06035C103KAT
C174	0160-7831	1	CAP-FXD 1.2pF +-20.83% 50 V CER C0G	02010	06035A1R2CAT
C175	0160-7855	1	CAP-FXD 33pF +-5% 50 V CER C0G	02010	06035A330JAT
C176	0160-8218	1	CAP-FXD 200pF +-2% 300 V PORC	03553	ATC100B201GPN300X
C177	0160-7861	1	CAP-FXD 47pF +-5% 50 V CER C0G	02010	06035A470JAT
C200	0160-7751	1	CAP-FXD 0.01uF +-10% 50 V CER X7R	02010	06035C103KAT
C201	0160-7751	1	CAP-FXD 0.01uF +-10% 50 V CER X7R	02010	06035C103KAT
C202	0160-7751	1	CAP-FXD 0.01uF +-10% 50 V CER X7R	02010	06035C103KAT
C203	0160-7751	1	CAP-FXD 0.01uF +-10% 50 V CER X7R	02010	06035C103KAT
C204	0160-7751	1	CAP-FXD 0.01uF +-10% 50 V CER X7R	02010	06035C103KAT
C205	0160-7853	1	CAP-FXD 3.3pF +-7.6% 50 V CER C0G	02010	06035A3R3CAT
C206	0160-7751	1	CAP-FXD 0.01uF +-10% 50 V CER X7R	02010	06035C103KAT
C207	0160-7751	1	CAP-FXD 0.01uF +-10% 50 V CER X7R	02010	06035C103KAT
C208	0160-7751	1	CAP-FXD 0.01uF +-10% 50 V CER X7R	02010	06035C103KAT

Agilent Part Number E4401-60183
21.4 MHz IF

Reference Designator	HP Part Number	Qty	Description	Mgr Code	Mfr Part Number
C209	0160-7830	1	CAP-FXD 1pF +-25% 50 V CER C0G	12340	C0603C109C5GAC
C210	0160-7751	1	CAP-FXD 0.01uF +-10% 50 V CER X7R	02010	06035C103KAT
C211	0160-7751	1	CAP-FXD 0.01uF +-10% 50 V CER X7R	02010	06035C103KAT
C212	0160-7751	1	CAP-FXD 0.01uF +-10% 50 V CER X7R	02010	06035C103KAT
C213	0160-7751	1	CAP-FXD 0.01uF +-10% 50 V CER X7R	02010	06035C103KAT
C214	0160-7751	1	CAP-FXD 0.01uF +-10% 50 V CER X7R	02010	06035C103KAT
C215	0160-7751	1	CAP-FXD 0.01uF +-10% 50 V CER X7R	02010	06035C103KAT
C216	0160-7751	1	CAP-FXD 0.01uF +-10% 50 V CER X7R	02010	06035C103KAT
C217	0160-7834	1	CAP-FXD 10pF +-5% 50 V CER C0G	02010	06035A100JAT
C218	0160-7751	1	CAP-FXD 0.01uF +-10% 50 V CER X7R	02010	06035C103KAT
C219	0160-7751	1	CAP-FXD 0.01uF +-10% 50 V CER X7R	02010	06035C103KAT
C220	0160-7798	1	CAP-FXD 0.1uF +-10% 50 V CER X7R	06352	C2012X7R1H104K
C221	0160-7751	1	CAP-FXD 0.01uF +-10% 50 V CER X7R	02010	06035C103KAT
C222	0160-7751	1	CAP-FXD 0.01uF +-10% 50 V CER X7R	02010	06035C103KAT
C223	0160-7751	1	CAP-FXD 0.01uF +-10% 50 V CER X7R	02010	06035C103KAT
C224	0160-7831	1	CAP-FXD 1.2pF +-20.83% 50 V CER C0G	02010	06035A1R2CAT
C225	0160-7868	1	CAP-FXD 68pF +-5% 50 V CER C0G	02010	06035A680JAT
C226	0160-8218	1	CAP-FXD 200pF +-2% 300 V PORC	03553	ATC100B201GPN300X
C227	0160-7861	1	CAP-FXD 47pF +-5% 50 V CER C0G	02010	06035A470JAT
C250	0160-7751	1	CAP-FXD 0.01uF +-10% 50 V CER X7R	02010	06035C103KAT
C251	0160-7751	1	CAP-FXD 0.01uF +-10% 50 V CER X7R	02010	06035C103KAT
C252	0160-7751	1	CAP-FXD 0.01uF +-10% 50 V CER X7R	02010	06035C103KAT
C253	0160-7853	1	CAP-FXD 3.3pF +-7.6% 50 V CER C0G	02010	06035A3R3CAT
C254	0160-7751	1	CAP-FXD 0.01uF +-10% 50 V CER X7R	02010	06035C103KAT
C255	0160-7751	1	CAP-FXD 0.01uF +-10% 50 V CER X7R	02010	06035C103KAT
C256	0160-7751	1	CAP-FXD 0.01uF +-10% 50 V CER X7R	02010	06035C103KAT
C257	0160-7751	1	CAP-FXD 0.01uF +-10% 50 V CER X7R	02010	06035C103KAT
C258	0160-7751	1	CAP-FXD 0.01uF +-10% 50 V CER X7R	02010	06035C103KAT

 **Indicates factory-selected value*

Scans by ArtekMedia => 2009

Agilent Part Number E4401-60183
21.4 MHz IF

Reference Designator	HP Part Number	Qty	Description	Mgr Code	Mfr Part Number
C259	0160-7751	1	CAP-FXD 0.01uF +-10% 50 V CER X7R	02010	06035C103KAT
C260	0160-7751	1	CAP-FXD 0.01uF +-10% 50 V CER X7R	02010	06035C103KAT
C261	0160-7751	1	CAP-FXD 0.01uF +-10% 50 V CER X7R	02010	06035C103KAT
C262	0160-7751	1	CAP-FXD 0.01uF +-10% 50 V CER X7R	02010	06035C103KAT
C263	0160-7751	1	CAP-FXD 0.01uF +-10% 50 V CER X7R	02010	06035C103KAT
C264	0160-7751	1	CAP-FXD 0.01uF +-10% 50 V CER X7R	02010	06035C103KAT
C265	0160-7751	1	CAP-FXD 0.01uF +-10% 50 V CER X7R	02010	06035C103KAT
C266	0160-7751	1	CAP-FXD 0.01uF +-10% 50 V CER X7R	02010	06035C103KAT
C267	0160-7751	1	CAP-FXD 0.01uF +-10% 50 V CER X7R	02010	06035C103KAT
C268	0160-7751	1	CAP-FXD 0.01uF +-10% 50 V CER X7R	02010	06035C103KAT
C269	0160-7847	1	CAP-FXD 2.2pF +-11.36% 50 V CER C0G	02010	06035A2R2CAT
C270	0160-7751	1	CAP-FXD 0.01uF +-10% 50 V CER X7R	02010	06035C103KAT
C271	0160-7751	1	CAP-FXD 0.01uF +-10% 50 V CER X7R	02010	06035C103KAT
C272	0160-7751	1	CAP-FXD 0.01uF +-10% 50 V CER X7R	02010	06035C103KAT
C273	0160-7831	1	CAP-FXD 1.2pF +-20.83% 50 V CER C0G	02010	06035A1R2CAT
C274	0160-7975	1	CAP-FXD 51pF +-5% 50 V CER C0G	06352	C1608COG1H510J
C275	0160-8218	1	CAP-FXD 200pF +-2% 300 V PORC	03553	ATC100B201GPN 300X
C276	0160-7861	1	CAP-FXD 47pF +-5% 50 V CER C0G	02010	06035A470JAT
C277	0160-7830	1	CAP-FXD 1pF +-25% 50 V CER C0G	12340	C0603C109C5GA C
C300	0160-7751	1	CAP-FXD 0.01uF +-10% 50 V CER X7R	02010	06035C103KAT
C301	0160-7847	1	CAP-FXD 2.2pF +-11.36% 50 V CER C0G	02010	06035A2R2CAT
C302	0160-7751	1	CAP-FXD 0.01uF +-10% 50 V CER X7R	02010	06035C103KAT
C303	0160-7751	1	CAP-FXD 0.01uF +-10% 50 V CER X7R	02010	06035C103KAT
C304	0160-7751	1	CAP-FXD 0.01uF +-10% 50 V CER X7R	02010	06035C103KAT
C306	0160-7964	1	CAP-FXD 5pF +-5% 50 V CER C0G	02010	06035A5R0CAT
C350	0180-3755	1	CAP-FXD 33uF +-20% 10 V TA	02010	TAJD336M010
C351	0160-7798	1	CAP-FXD 0.1uF +-10% 50 V CER X7R	06352	C2012X7R1H104 K

Agilent Part Number E4401-60183
21.4 MHz IF

Reference Designator	HP Part Number	Qty	Description	Mgr Code	Mfr Part Number
C352	0160-7798	1	CAP-FXD 0.1uF +-10% 50 V CER X7R	06352	C2012X7R1H104 K
C353	0160-7798	1	CAP-FXD 0.1uF +-10% 50 V CER X7R	06352	C2012X7R1H104 K
C354	0160-7798	1	CAP-FXD 0.1uF +-10% 50 V CER X7R	06352	C2012X7R1H104 K
C355	0160-7798	1	CAP-FXD 0.1uF +-10% 50 V CER X7R	06352	C2012X7R1H104 K
C356	0160-7798	1	CAP-FXD 0.1uF +-10% 50 V CER X7R	06352	C2012X7R1H104 K
C357	0160-7861	1	CAP-FXD 47pF +-5% 50 V CER C0G	02010	06035A470JAT
C358	0160-7988	1	CAP-FXD 470pF +-5% 50 V CER C0G	06352	C1608COG1H471J
C359	0160-7751	1	CAP-FXD 0.01uF +-10% 50 V CER X7R	02010	06035C103KAT
C360	0160-7751	1	CAP-FXD 0.01uF +-10% 50 V CER X7R	02010	06035C103KAT
C361	0160-7751	1	CAP-FXD 0.01uF +-10% 50 V CER X7R	02010	06035C103KAT
C362	0160-7751	1	CAP-FXD 0.01uF +-10% 50 V CER X7R	02010	06035C103KAT
C363	0160-7835	1	CAP-FXD 100pF +-5% 50 V CER C0G	02010	06035A101JAT
C364	0160-7835	1	CAP-FXD 100pF +-5% 50 V CER C0G	02010	06035A101JAT
C400	0160-7982	1	CAP-FXD 200pF +-5% 50 V CER C0G	02010	06035A201JAT
C401	0160-7982	1	CAP-FXD 200pF +-5% 50 V CER C0G	02010	06035A201JAT
C402	0160-7751	1	CAP-FXD 0.01uF +-10% 50 V CER X7R	02010	06035C103KAT
C403	0160-7849	1	CAP-FXD 220pF +-5% 50 V CER C0G	02010	06035A221JAT
C404	0180-3755	1	CAP-FXD 33uF +-20% 10 V TA	02010	TAJD336M010
C450	0160-7751	1	CAP-FXD 0.01uF +-10% 50 V CER X7R	02010	06035C103KAT
C451	0160-7751	1	CAP-FXD 0.01uF +-10% 50 V CER X7R	02010	06035C103KAT
C452	0160-7751	1	CAP-FXD 0.01uF +-10% 50 V CER X7R	02010	06035C103KAT
C453	0160-7832	1	CAP-FXD 1.5pF +-16.67% 50 V CER C0G	02010	06035A1R5CAT
C454	0160-7855	1	CAP-FXD 33pF +-5% 50 V CER C0G	02010	06035A330JAT
C455	0160-7751	1	CAP-FXD 0.01uF +-10% 50 V CER X7R	02010	06035C103KAT
C456	0160-7751	1	CAP-FXD 0.01uF +-10% 50 V CER X7R	02010	06035C103KAT
C457	0160-7751	1	CAP-FXD 0.01uF +-10% 50 V CER X7R	02010	06035C103KAT
C458	0160-7751	1	CAP-FXD 0.01uF +-10% 50 V CER X7R	02010	06035C103KAT

Scans by ArtekMedia => 2009

Agilent Part Number E4401-60183
21.4 MHz IF

Reference Designator	HP Part Number	Qty	Description	Mgr Code	Mfr Part Number
C459	0160-7751	1	CAP-FXD 0.01uF +-10% 50 V CER X7R	02010	06035C103KAT
C460	0160-7838	1	CAP-FXD 120pF +-5% 50 V CER C0G	02010	06035A121JAT
C461	0160-7849	1	CAP-FXD 220pF +-5% 50 V CER C0G	02010	06035A221JAT
C462	0160-7751	1	CAP-FXD 0.01uF +-10% 50 V CER X7R	02010	06035C103KAT
C463	0160-7751	1	CAP-FXD 0.01uF +-10% 50 V CER X7R	02010	06035C103KAT
C500	0160-7751	1	CAP-FXD 0.01uF +-10% 50 V CER X7R	02010	06035C103KAT
C501	0160-7751	1	CAP-FXD 0.01uF +-10% 50 V CER X7R	02010	06035C103KAT
C502	0160-7751	1	CAP-FXD 0.01uF +-10% 50 V CER X7R	02010	06035C103KAT
C503	0160-7751	1	CAP-FXD 0.01uF +-10% 50 V CER X7R	02010	06035C103KAT
C504	0160-7751	1	CAP-FXD 0.01uF +-10% 50 V CER X7R	02010	06035C103KAT
C505	0160-7751	1	CAP-FXD 0.01uF +-10% 50 V CER X7R	02010	06035C103KAT
C506	0160-7775	1	CAP-FXD 5.6pF +-4.5% 50 V CER C0G	02010	06035A5R6CAT
C507	0160-7751	1	CAP-FXD 0.01uF +-10% 50 V CER X7R	02010	06035C103KAT
C550	0160-7798	1	CAP-FXD 0.1uF +-10% 50 V CER X7R	06352	C2012X7R1H104 K
C551	0160-7751	1	CAP-FXD 0.01uF +-10% 50 V CER X7R	02010	06035C103KAT
C552	0160-7751	1	CAP-FXD 0.01uF +-10% 50 V CER X7R	02010	06035C103KAT
C553	0160-7798	1	CAP-FXD 0.1uF +-10% 50 V CER X7R	06352	C2012X7R1H104 K
C554	0160-7849	1	CAP-FXD 220pF +-5% 50 V CER C0G	02010	06035A221JAT
C555	0160-7842	1	CAP-FXD 150pF +-5% 50 V CER C0G	02010	06035A151JAT
C556	0160-7798	1	CAP-FXD 0.1uF +-10% 50 V CER X7R	06352	C2012X7R1H104 K
C557	0160-7798	1	CAP-FXD 0.1uF +-10% 50 V CER X7R	06352	C2012X7R1H104 K
C558	0160-7751	1	CAP-FXD 0.01uF +-10% 50 V CER X7R	02010	06035C103KAT
C559	0160-7798	1	CAP-FXD 0.1uF +-10% 50 V CER X7R	06352	C2012X7R1H104 K
C560	0160-7849	1	CAP-FXD 220pF +-5% 50 V CER C0G	02010	06035A221JAT
C561	0160-7798	1	CAP-FXD 0.1uF +-10% 50 V CER X7R	06352	C2012X7R1H104 K

Agilent Part Number E4401-60183
21.4 MHz IF

Reference Designator	HP Part Number	Qty	Description	Mgr Code	Mfr Part Number
C562	0160-7798	1	CAP-FXD 0.1uF +-10% 50 V CER X7R	06352	C2012X7R1H104 K
C563	0160-7798	1	CAP-FXD 0.1uF +-10% 50 V CER X7R	06352	C2012X7R1H104 K
C564	0160-7751	1	CAP-FXD 0.01uF +-10% 50 V CER X7R	02010	06035C103KAT
C565	0160-7798	1	CAP-FXD 0.1uF +-10% 50 V CER X7R	06352	C2012X7R1H104 K
C600	0160-7751	1	CAP-FXD 0.01uF +-10% 50 V CER X7R	02010	06035C103KAT
C601	0160-7751	1	CAP-FXD 0.01uF +-10% 50 V CER X7R	02010	06035C103KAT
C602	0160-7751	1	CAP-FXD 0.01uF +-10% 50 V CER X7R	02010	06035C103KAT
C603	0160-7751	1	CAP-FXD 0.01uF +-10% 50 V CER X7R	02010	06035C103KAT
C604	0160-7751	1	CAP-FXD 0.01uF +-10% 50 V CER X7R	02010	06035C103KAT
C605	0160-7748	1	CAP-FXD 1000pF +-10% 50 V CER X7R	02010	06035C102KAT
C650	0160-7798	1	CAP-FXD 0.1uF +-10% 50 V CER X7R	06352	C2012X7R1H104 K
C651	0160-7798	1	CAP-FXD 0.1uF +-10% 50 V CER X7R	06352	C2012X7R1H104 K
C652	0160-7798	1	CAP-FXD 0.1uF +-10% 50 V CER X7R	06352	C2012X7R1H104 K
C653	0160-7798	1	CAP-FXD 0.1uF +-10% 50 V CER X7R	06352	C2012X7R1H104 K
C700	0160-7855	1	CAP-FXD 33pF +-5% 50 V CER C0G	02010	06035A330JAT
C701	0160-7845	1	CAP-FXD 180pF +-5% 50 V CER C0G	02010	06035A181JAT
C702	0160-7798	1	CAP-FXD 0.1uF +-10% 50 V CER X7R	06352	C2012X7R1H104 K
C703	0160-7849	1	CAP-FXD 220pF +-5% 50 V CER C0G	02010	06035A221JAT
C704	0160-7988	1	CAP-FXD 470pF +-5% 50 V CER C0G	06352	C1608COG1H471J
C705	0160-7798	1	CAP-FXD 0.1uF +-10% 50 V CER X7R	06352	C2012X7R1H104 K
C750	0160-6107	1	CAP-FXD 3900pF +-5% 50 V CER C0G	02010	12105A392JATA
C751	0160-6107	1	CAP-FXD 3900pF +-5% 50 V CER C0G	02010	12105A392JATA
C752	0160-6107	1	CAP-FXD 3900pF +-5% 50 V CER C0G	02010	12105A392JATA
C753	0160-6107	1	CAP-FXD 3900pF +-5% 50 V CER C0G	02010	12105A392JATA

Scans by ArtekMedia => 2009

Agilent Part Number E4401-60183
21.4 MHz IF

Reference Designator	HP Part Number	Qty	Description	Mgr Code	Mfr Part Number
C754	0160-7798	1	CAP-FXD 0.1uF +-10% 50 V CER X7R	06352	C2012X7R1H104 K
C755	0160-6107	1	CAP-FXD 3900pF +-5% 50 V CER C0G	02010	12105A392JATA
C756	0160-6107	1	CAP-FXD 3900pF +-5% 50 V CER C0G	02010	12105A392JATA
C757	0160-7798	1	CAP-FXD 0.1uF +-10% 50 V CER X7R	06352	C2012X7R1H104 K
C758	0160-6107	1	CAP-FXD 3900pF +-5% 50 V CER C0G	02010	12105A392JATA
C759	0160-6107	1	CAP-FXD 3900pF +-5% 50 V CER C0G	02010	12105A392JATA
C760	0160-7798	1	CAP-FXD 0.1uF +-10% 50 V CER X7R	06352	C2012X7R1H104 K
C761	0160-7798	1	CAP-FXD 0.1uF +-10% 50 V CER X7R	06352	C2012X7R1H104 K
C800	0160-7798	1	CAP-FXD 0.1uF +-10% 50 V CER X7R	06352	C2012X7R1H104 K
C801	0160-7798	1	CAP-FXD 0.1uF +-10% 50 V CER X7R	06352	C2012X7R1H104 K
C802	0160-7798	1	CAP-FXD 0.1uF +-10% 50 V CER X7R	06352	C2012X7R1H104 K
C803	0160-7798	1	CAP-FXD 0.1uF +-10% 50 V CER X7R	06352	C2012X7R1H104 K
C804	0160-7798	1	CAP-FXD 0.1uF +-10% 50 V CER X7R	06352	C2012X7R1H104 K
C805	0160-7798	1	CAP-FXD 0.1uF +-10% 50 V CER X7R	06352	C2012X7R1H104 K
C806	0160-7798	1	CAP-FXD 0.1uF +-10% 50 V CER X7R	06352	C2012X7R1H104 K
C807	0160-7798	1	CAP-FXD 0.1uF +-10% 50 V CER X7R	06352	C2012X7R1H104 K
C808	0160-7798	1	CAP-FXD 0.1uF +-10% 50 V CER X7R	06352	C2012X7R1H104 K
C809	0160-7798	1	CAP-FXD 0.1uF +-10% 50 V CER X7R	06352	C2012X7R1H104 K
C810	0160-7798	1	CAP-FXD 0.1uF +-10% 50 V CER X7R	06352	C2012X7R1H104 K
C811	0160-7798	1	CAP-FXD 0.1uF +-10% 50 V CER X7R	06352	C2012X7R1H104 K

Agilent Part Number E4401-60183
21.4 MHz IF

Reference Designator	HP Part Number	Qty	Description	Mgr Code	Mfr Part Number
C812	0160-7798	1	CAP-FXD 0.1uF +-10% 50 V CER X7R	06352	C2012X7R1H104 K
C813	0160-7798	1	CAP-FXD 0.1uF +-10% 50 V CER X7R	06352	C2012X7R1H104 K
C814	0160-7798	1	CAP-FXD 0.1uF +-10% 50 V CER X7R	06352	C2012X7R1H104 K
C815	0160-7798	1	CAP-FXD 0.1uF +-10% 50 V CER X7R	06352	C2012X7R1H104 K
C816	0160-7798	1	CAP-FXD 0.1uF +-10% 50 V CER X7R	06352	C2012X7R1H104 K
C817	0160-7798	1	CAP-FXD 0.1uF +-10% 50 V CER X7R	06352	C2012X7R1H104 K
C818	0160-7798	1	CAP-FXD 0.1uF +-10% 50 V CER X7R	06352	C2012X7R1H104 K
C819	0160-7798	1	CAP-FXD 0.1uF +-10% 50 V CER X7R	06352	C2012X7R1H104 K
C820	0160-7798	1	CAP-FXD 0.1uF +-10% 50 V CER X7R	06352	C2012X7R1H104 K
C821	0160-7798	1	CAP-FXD 0.1uF +-10% 50 V CER X7R	06352	C2012X7R1H104 K
C822	0160-7798	1	CAP-FXD 0.1uF +-10% 50 V CER X7R	06352	C2012X7R1H104 K
C823	0160-7798	1	CAP-FXD 0.1uF +-10% 50 V CER X7R	06352	C2012X7R1H104 K
C824	0160-7798	1	CAP-FXD 0.1uF +-10% 50 V CER X7R	06352	C2012X7R1H104 K
C825	0160-7798	1	CAP-FXD 0.1uF +-10% 50 V CER X7R	06352	C2012X7R1H104 K
C826	0160-7798	1	CAP-FXD 0.1uF +-10% 50 V CER X7R	06352	C2012X7R1H104 K
C1001	0180-4287	1	CAP-FXD 10uF +-20% 35 V TA	02010	TAJD106M035
C1002	0160-7855	1	CAP-FXD 33pF +-5% 50 V CER C0G	02010	06035A330JAT
C1003	0160-7853	1	CAP-FXD 3.3pF +-7.6% 50 V CER C0G	02010	06035A3R3CAT
C1004	0160-7853	1	CAP-FXD 3.3pF +-7.6% 50 V CER C0G	02010	06035A3R3CAT
C1005	0160-7849	1	CAP-FXD 220pF +-5% 50 V CER C0G	02010	06035A221JAT
C1006	0160-7749	1	CAP-FXD 22pF +-5% 50 V CER C0G	02010	06035A220JAT

Scans by ArtekMedia => 2009

Agilent Part Number E4401-60183
21.4 MHz IF

Reference Designator	HP Part Number	Qty	Description	Mgr Code	Mfr Part Number
C1007	0160-7860	1	CAP-FXD 4.7pF +-5.31% 50 V CER C0G	02010	06035A4R7CAT
CR50	1901-1192	1	DIODE-PIN 35V 100MA TO-236 (SOT-23)	01542	HSMP-3820
CR51	1901-1192	1	DIODE-PIN 35V 100MA TO-236 (SOT-23)	01542	HSMP-3820
CR52	1901-1192	1	DIODE-PIN 35V 100MA TO-236 (SOT-23)	01542	HSMP-3820
CR53	1901-1192	1	DIODE-PIN 35V 100MA TO-236 (SOT-23)	01542	HSMP-3820
CR54	1901-1192	1	DIODE-PIN 35V 100MA TO-236 (SOT-23)	01542	HSMP-3820
CR55	1901-1192	1	DIODE-PIN 35V 100MA TO-236 (SOT-23)	01542	HSMP-3820
CR100	1906-0291	1	DIODE-DUAL 70V 100MA T0-236AA	02910	BAV99
CR101	1900-0405	1	DIODE-PIN	01542	HSMP-3810
CR102	1900-0270	1	DIODE-PIN	01542	HSMP-3822
CR103	0122-0350	1	DIODE-VVC BVR14V TO-236 (SOT-23)	36633	MMBV432LT1
CR104	0122-0350	1	DIODE-VVC BVR14V TO-236 (SOT-23)	36633	MMBV432LT1
CR105	1900-0297	1	DIODE-PIN	01542	HSMP-3812
CR106	1906-0291	1	DIODE-DUAL 70V 100MA T0-236AA	02910	BAV99
CR107	0122-0175	1	DIODE-VVC 1.8PF 10% C 1/C28-TYP9.7	02910	BBY31
CR108	0122-0175	1	DIODE-VVC 1.8PF 10% C 1/C28-TYP9.7	02910	BBY31
CR109	1906-0291	1	DIODE-DUAL 70V 100MA T0-236AA	02910	BAV99
CR110	1900-0270	1	DIODE-PIN	01542	HSMP-3822
CR111	1900-0297	1	DIODE-PIN	01542	HSMP-3812
CR112	0122-0175	1	DIODE-VVC 1.8PF 10% C 1/C28-TYP9.7	02910	BBY31
CR150	1906-0291	1	DIODE-DUAL 70V 100MA T0-236AA	02910	BAV99
CR151	1900-0270	1	DIODE-PIN	01542	HSMP-3822
CR152	1900-0405	1	DIODE-PIN	01542	HSMP-3810
CR153	0122-0350	1	DIODE-VVC BVR14V TO-236 (SOT-23)	36633	MMBV432LT1
CR154	0122-0350	1	DIODE-VVC BVR14V TO-236 (SOT-23)	36633	MMBV432LT1
CR155	1900-0297	1	DIODE-PIN	01542	HSMP-3812
CR156	1906-0291	1	DIODE-DUAL 70V 100MA T0-236AA	02910	BAV99
CR157	0122-0175	1	DIODE-VVC 1.8PF 10% C 1/C28-TYP9.7	02910	BBY31
CR158	1906-0291	1	DIODE-DUAL 70V 100MA T0-236AA	02910	BAV99
CR159	1900-0270	1	DIODE-PIN	01542	HSMP-3822

Agilent Part Number E4401-60183
21.4 MHz IF

Reference Designator	HP Part Number	Qty	Description	Mgr Code	Mfr Part Number
CR160	1900-0297	1	DIODE-PIN	01542	HSMP-3812
CR161	0122-0175	1	DIODE-VVC 1.8PF 10% C 1/C28-TYP9.7	02910	BBY31
CR162	0122-0175	1	DIODE-VVC 1.8PF 10% C 1/C28-TYP9.7	02910	BBY31
CR200	1906-0291	1	DIODE-DUAL 70V 100MA T0-236AA	02910	BAV99
CR201	1900-0270	1	DIODE-PIN	01542	HSMP-3822
CR202	1900-0405	1	DIODE-PIN	01542	HSMP-3810
CR203	0122-0350	1	DIODE-VVC BVR14V TO-236 (SOT-23)	36633	MMBV432LT1
CR204	0122-0350	1	DIODE-VVC BVR14V TO-236 (SOT-23)	36633	MMBV432LT1
CR205	1900-0297	1	DIODE-PIN	01542	HSMP-3812
CR206	1906-0291	1	DIODE-DUAL 70V 100MA T0-236AA	02910	BAV99
CR207	1906-0291	1	DIODE-DUAL 70V 100MA T0-236AA	02910	BAV99
CR208	1900-0270	1	DIODE-PIN	01542	HSMP-3822
CR209	1900-0297	1	DIODE-PIN	01542	HSMP-3812
CR210	0122-0175	1	DIODE-VVC 1.8PF 10% C 1/C28-TYP9.7	02910	BBY31
CR211	0122-0175	1	DIODE-VVC 1.8PF 10% C 1/C28-TYP9.7	02910	BBY31
CR212	0122-0175	1	DIODE-VVC 1.8PF 10% C 1/C28-TYP9.7	02910	BBY31
CR250	1906-0291	1	DIODE-DUAL 70V 100MA T0-236AA	02910	BAV99
CR251	1900-0270	1	DIODE-PIN	01542	HSMP-3822
CR252	1900-0405	1	DIODE-PIN	01542	HSMP-3810
CR253	0122-0350	1	DIODE-VVC BVR14V TO-236 (SOT-23)	36633	MMBV432LT1
CR254	0122-0350	1	DIODE-VVC BVR14V TO-236 (SOT-23)	36633	MMBV432LT1
CR255	1900-0297	1	DIODE-PIN	01542	HSMP-3812
CR256	1900-0270	1	DIODE-PIN	01542	HSMP-3822
CR257	1906-0291	1	DIODE-DUAL 70V 100MA T0-236AA	02910	BAV99
CR258	1900-0297	1	DIODE-PIN	01542	HSMP-3812
CR259	0122-0175	1	DIODE-VVC 1.8PF 10% C 1/C28-TYP9.7	02910	BBY31
CR260	1906-0291	1	DIODE-DUAL 70V 100MA T0-236AA	02910	BAV99
CR261	0122-0175	1	DIODE-VVC 1.8PF 10% C 1/C28-TYP9.7	02910	BBY31
CR262	0122-0175	1	DIODE-VVC 1.8PF 10% C 1/C28-TYP9.7	02910	BBY31
CR300	0122-0350	1	DIODE-VVC BVR14V TO-236 (SOT-23)	36633	MMBV432LT1

Scans by ArtekMedia => 2009

Agilent Part Number E4401-60183
21.4 MHz IF

Reference Designator	HP Part Number	Qty	Description	Mgr Code	Mfr Part Number
CR350	0122-0350	1	DIODE-VVC BVR14V TO-236 (SOT-23)	36633	MMBV432LT1
CR351	0122-0350	1	DIODE-VVC BVR14V TO-236 (SOT-23)	36633	MMBV432LT1
CR352	1901-1192	1	DIODE-PIN 35V 100MA TO-236 (SOT-23)	01542	HSMP-3820
CR353	1906-0291	1	DIODE-DUAL 70V 100MA T0-236AA	02910	BAV99
CR450	1901-1192	1	DIODE-PIN 35V 100MA TO-236 (SOT-23)	01542	HSMP-3820
CR451	0122-0350	1	DIODE-VVC BVR14V TO-236 (SOT-23)	36633	MMBV432LT1
CR500	1900-0270	1	DIODE-PIN	01542	HSMP-3822
CR501	0122-0350	1	DIODE-VVC BVR14V TO-236 (SOT-23)	36633	MMBV432LT1
CR502	0122-0350	1	DIODE-VVC BVR14V TO-236 (SOT-23)	36633	MMBV432LT1
CR503	0122-0350	1	DIODE-VVC BVR14V TO-236 (SOT-23)	36633	MMBV432LT1
CR504	0122-0350	1	DIODE-VVC BVR14V TO-236 (SOT-23)	36633	MMBV432LT1
CR505	0122-0350	1	DIODE-VVC BVR14V TO-236 (SOT-23)	36633	MMBV432LT1
CR506	0122-0350	1	DIODE-VVC BVR14V TO-236 (SOT-23)	36633	MMBV432LT1
CR507	0122-0350	1	DIODE-VVC BVR14V TO-236 (SOT-23)	36633	MMBV432LT1
CR508	0122-0350	1	DIODE-VVC BVR14V TO-236 (SOT-23)	36633	MMBV432LT1
CR509	1900-0297	1	DIODE-PIN	01542	HSMP-3812
J1	1252-7021	1	CONN-RECT MICRORBN 40-CKT 40-CONT	01380	557101-5
J2	1250-0543	1	CONNECTOR-RF SMB MALE PC-W-STDFS 50-OHM	07247	59S213-40TD3
J3	1252-3839	1	CONN-POST TYPE .100-PIN-SPCG-MTG-END	13369	69190-602
K100	0490-1853	1	RELAY-REED 1A 500MA 200VDC 12VDC-COIL	04501	9200-0112TR
K101	0490-1853	1	RELAY-REED 1A 500MA 200VDC 12VDC-COIL	04501	9200-0112TR
K102	0490-1853	1	RELAY-REED 1A 500MA 200VDC 12VDC-COIL	04501	9200-0112TR
K103	0490-1853	1	RELAY-REED 1A 500MA 200VDC 12VDC-COIL	04501	9200-0112TR
K104	0490-1853	1	RELAY-REED 1A 500MA 200VDC 12VDC-COIL	04501	9200-0112TR
K150	0490-1853	1	RELAY-REED 1A 500MA 200VDC 12VDC-COIL	04501	9200-0112TR
K151	0490-1853	1	RELAY-REED 1A 500MA 200VDC 12VDC-COIL	04501	9200-0112TR
K152	0490-1853	1	RELAY-REED 1A 500MA 200VDC 12VDC-COIL	04501	9200-0112TR
K153	0490-1853	1	RELAY-REED 1A 500MA 200VDC 12VDC-COIL	04501	9200-0112TR
K154	0490-1853	1	RELAY-REED 1A 500MA 200VDC 12VDC-COIL	04501	9200-0112TR

Agilent Part Number E4401-60183
21.4 MHz IF

Reference Designator	HP Part Number	Qty	Description	Mgr Code	Mfr Part Number
K200	0490-1853	1	RELAY-REED 1A 500MA 200VDC 12VDC-COIL	04501	9200-0112TR
K201	0490-1853	1	RELAY-REED 1A 500MA 200VDC 12VDC-COIL	04501	9200-0112TR
K202	0490-1853	1	RELAY-REED 1A 500MA 200VDC 12VDC-COIL	04501	9200-0112TR
K203	0490-1853	1	RELAY-REED 1A 500MA 200VDC 12VDC-COIL	04501	9200-0112TR
K204	0490-1853	1	RELAY-REED 1A 500MA 200VDC 12VDC-COIL	04501	9200-0112TR
K250	0490-1853	1	RELAY-REED 1A 500MA 200VDC 12VDC-COIL	04501	9200-0112TR
K251	0490-1853	1	RELAY-REED 1A 500MA 200VDC 12VDC-COIL	04501	9200-0112TR
K252	0490-1853	1	RELAY-REED 1A 500MA 200VDC 12VDC-COIL	04501	9200-0112TR
K253	0490-1853	1	RELAY-REED 1A 500MA 200VDC 12VDC-COIL	04501	9200-0112TR
K254	0490-1853	1	RELAY-REED 1A 500MA 200VDC 12VDC-COIL	04501	9200-0112TR
L1	9140-1736	1	INDUCTOR 47uH +20% -20% 7.3W-mmX7.3LG-mm	06353	E636CY-470M-P3
L2	9140-1736	1	INDUCTOR 47uH +20% -20% 7.3W-mmX7.3LG-mm	06353	E636CY-470M-P3
L3	9140-1736	1	INDUCTOR 47uH +20% -20% 7.3W-mmX7.3LG-mm	06353	E636CY-470M-P3
L4	9140-1736	1	INDUCTOR 47uH +20% -20% 7.3W-mmX7.3LG-mm	06353	E636CY-470M-P3
L5	9140-1736	1	INDUCTOR 47uH +20% -20% 7.3W-mmX7.3LG-mm	06353	E636CY-470M-P3
L50	9170-1421	1	CORE-SHIELDING BEAD	06352	HF50ACB-322513
L51	9170-1421	1	CORE-SHIELDING BEAD	06352	HF50ACB-322513
L100	9140-1422	1	INDUCTOR 1.8uH +-5% 3.4W-mmX4.8LG-mm	28480	9140-1422
L151	9140-1422	1	INDUCTOR 1.8uH +-5% 3.4W-mmX4.8LG-mm	28480	9140-1422
L200	9140-1422	1	INDUCTOR 1.8uH +-5% 3.4W-mmX4.8LG-mm	28480	9140-1422
L250	9140-1422	1	INDUCTOR 1.8uH +-5% 3.4W-mmX4.8LG-mm	28480	9140-1422
L251	9170-1421	1	CORE-SHIELDING BEAD	06352	HF50ACB-322513
L252	9140-1108	1	INDUCTOR 3.3uH +-5% 3.4W-mmX4.8LG-mm	28480	9140-1108
L300	9170-1421	1	CORE-SHIELDING BEAD	06352	HF50ACB-322513
L301	9140-1105	1	INDUCTOR 1uH +-5% 3.4W-mmX4.8LG-mm Q50	28480	9140-1105
L302	9170-1421	1	CORE-SHIELDING BEAD	06352	HF50ACB-322513
L303	9170-1421	1	CORE-SHIELDING BEAD	06352	HF50ACB-322513

 **Indicates factory-selected value*

Scans by ArtekMedia => 2009

Agilent Part Number E4401-60183
21.4 MHz IF

Reference Designator	HP Part Number	Qty	Description	Mgr Code	Mfr Part Number
L400	9170-1421	1	CORE-SHIELDING BEAD	06352	HF50ACB-322513
L450	9170-1421	1	CORE-SHIELDING BEAD	06352	HF50ACB-322513
L451	9140-1101	1	INDUCTOR 470nH +-5% 2.8W-mmX3.4LG-mm	09891	KL32TER47J
L500	9170-1421	1	CORE-SHIELDING BEAD	06352	HF50ACB-322513
L550	9170-1421	1	CORE-SHIELDING BEAD	06352	HF50ACB-322513
L551	9170-1421	1	CORE-SHIELDING BEAD	06352	HF50ACB-322513
L552	9170-1421	1	CORE-SHIELDING BEAD	06352	HF50ACB-322513
L700	9140-1106	1	INDUCTOR 1.5uH +-5% 3.4W-mmX4.8LG-mm	28480	9140-1106
L701	9140-1107	1	INDUCTOR 2.2uH +-5% 3.4W-mmX4.8LG-mm	28480	9140-1107
L702	9140-1422	1	INDUCTOR 1.8uH +-5% 3.4W-mmX4.8LG-mm	28480	9140-1422
L703	9140-1108	1	INDUCTOR 3.3uH +-5% 3.4W-mmX4.8LG-mm	28480	9140-1108
L704	9140-1108	1	INDUCTOR 3.3uH +-5% 3.4W-mmX4.8LG-mm	28480	9140-1108
L705	9140-1428	1	INDUCTOR 1.2uH +-5% 3.4W-mmX4.8LG-mm	28480	9140-1428
MP2	E4401-60106	1	AY-IF TOP SHIELD	28480	E4401-60106
MP3	E4401-60046	1	SHLD AY-IF BTM	28480	E4401-60046
MP4	0515-0375	1	SCREW-MACHINE ASSEMBLY M3 X 0.5 16MM-LG	05610	0515-0375
MP5	0515-0375	1	SCREW-MACHINE ASSEMBLY M3 X 0.5 16MM-LG	05610	0515-0375
MP6	0515-0375	1	SCREW-MACHINE ASSEMBLY M3 X 0.5 16MM-LG	05610	0515-0375
MP7	0515-0375	1	SCREW-MACHINE ASSEMBLY M3 X 0.5 16MM-LG	05610	0515-0375
MP8	0515-0375	1	SCREW-MACHINE ASSEMBLY M3 X 0.5 16MM-LG	05610	0515-0375
MP9	0515-0375	1	SCREW-MACHINE ASSEMBLY M3 X 0.5 16MM-LG	05610	0515-0375
Q50	1854-1108	1	TRANSISTOR NPN SI SOT-23 (TO-236AB)	02037	MMBR901LT1
Q51	1854-1108	1	TRANSISTOR NPN SI SOT-23 (TO-236AB)	02037	MMBR901LT1
Q100	1854-1108	1	TRANSISTOR NPN SI SOT-23 (TO-236AB)	02037	MMBR901LT1
Q101	1854-1108	1	TRANSISTOR NPN SI SOT-23 (TO-236AB)	02037	MMBR901LT1

Agilent Part Number E4401-60183
21.4 MHz IF

Reference Designator	HP Part Number	Qty	Description	Mgr Code	Mfr Part Number
Q102	1854-1108	1	TRANSISTOR NPN SI SOT-23 (TO-236AB)	02037	MMBR901LT1
Q103	1854-1108	1	TRANSISTOR NPN SI SOT-23 (TO-236AB)	02037	MMBR901LT1
Q150	1854-1108	1	TRANSISTOR NPN SI SOT-23 (TO-236AB)	02037	MMBR901LT1
Q151	1854-1108	1	TRANSISTOR NPN SI SOT-23 (TO-236AB)	02037	MMBR901LT1
Q152	1854-1108	1	TRANSISTOR NPN SI SOT-23 (TO-236AB)	02037	MMBR901LT1
Q153	1854-1108	1	TRANSISTOR NPN SI SOT-23 (TO-236AB)	02037	MMBR901LT1
Q200	1854-1108	1	TRANSISTOR NPN SI SOT-23 (TO-236AB)	02037	MMBR901LT1
Q201	1854-1108	1	TRANSISTOR NPN SI SOT-23 (TO-236AB)	02037	MMBR901LT1
Q202	1854-1108	1	TRANSISTOR NPN SI SOT-23 (TO-236AB)	02037	MMBR901LT1
Q203	1854-1108	1	TRANSISTOR NPN SI SOT-23 (TO-236AB)	02037	MMBR901LT1
Q250	1854-1108	1	TRANSISTOR NPN SI SOT-23 (TO-236AB)	02037	MMBR901LT1
Q251	1854-1108	1	TRANSISTOR NPN SI SOT-23 (TO-236AB)	02037	MMBR901LT1
Q252	1854-1226	1	TRANSISTOR NPN SI TO-253 PD400MW	02037	MRF9411LT1
Q300	1854-1108	1	TRANSISTOR NPN SI SOT-23 (TO-236AB)	02037	MMBR901LT1
Q301	1854-1108	1	TRANSISTOR NPN SI SOT-23 (TO-236AB)	02037	MMBR901LT1
Q450	1854-1108	1	TRANSISTOR NPN SI SOT-23 (TO-236AB)	02037	MMBR901LT1
Q500	1854-1108	1	TRANSISTOR NPN SI SOT-23 (TO-236AB)	02037	MMBR901LT1
Q550	1854-1108	1	TRANSISTOR NPN SI SOT-23 (TO-236AB)	02037	MMBR901LT1
Q551	1854-1108	1	TRANSISTOR NPN SI SOT-23 (TO-236AB)	02037	MMBR901LT1
Q552	1854-1108	1	TRANSISTOR NPN SI SOT-23 (TO-236AB)	02037	MMBR901LT1
Q553	1854-1108	1	TRANSISTOR NPN SI SOT-23 (TO-236AB)	02037	MMBR901LT1
Q554	1854-1108	1	TRANSISTOR NPN SI SOT-23 (TO-236AB)	02037	MMBR901LT1
Q555	1854-1108	1	TRANSISTOR NPN SI SOT-23 (TO-236AB)	02037	MMBR901LT1
Q800	1858-0113	1	TRANSISTOR ARRAY 16-PIN PLSTC SURFACE	02237	MMPQ2907A
Q801	1858-0120	1	TRANSISTOR ARRAY 16-PIN PLSTC SURFACE	02237	MMPQ3904
R1	0699-3913	1	RESISTOR 31.6 +-1% .063W TKF TC0+-200	09891	RK73H1J31R6F
R2	0699-3932	1	RESISTOR 215 +-1% .063W TKF TC0+-200	00746	MCR03-F-2150
R3	0699-3913	1	RESISTOR 31.6 +-1% .063W TKF TC0+-200	09891	RK73H1J31R6F
R4	0699-3913	1	RESISTOR 31.6 +-1% .063W TKF TC0+-200	09891	RK73H1J31R6F
R5	0699-3913	1	RESISTOR 31.6 +-1% .063W TKF TC0+-200	09891	RK73H1J31R6F

 **Indicates factory-selected value*

Scans by ArtekMedia => 2009

Agilent Part Number E4401-60183
21.4 MHz IF

Reference Designator	HP Part Number	Qty	Description	Mgr Code	Mfr Part Number
R6	0699-3932	1	RESISTOR 215 +-1% .063W TKF TC0+-200	00746	MCR03-F-2150
R7	0699-3913	1	RESISTOR 31.6 +-1% .063W TKF TC0+-200	09891	RK73H1J31R6F
R8	0699-3913	1	RESISTOR 31.6 +-1% .063W TKF TC0+-200	09891	RK73H1J31R6F
R50	0699-3947	1	RESISTOR 1K +-1% .063W TKF TC0+-200	00746	MCR03-F-1001
R51	0699-3947	1	RESISTOR 1K +-1% .063W TKF TC0+-200	00746	MCR03-F-1001
R52	0699-3947	1	RESISTOR 1K +-1% .063W TKF TC0+-200	00746	MCR03-F-1001
R53	0699-3901	1	RESISTOR 10 +-1% .063W TKF TC0+-200	00746	MCR03-F-10R0
R54	0699-3959	1	RESISTOR 3.16K +-1% .063W TKF TC0+-200	00746	MCR03-F-3161
R55	0699-3968	1	RESISTOR 8.25K +-1% .063W TKF TC0+-200	09891	RK73H1J8251F
R56	0699-3919	1	RESISTOR 61.9 +-1% .063W TKF TC0+-200	05524	CRCW060361R9F
R57	0699-3947	1	RESISTOR 1K +-1% .063W TKF TC0+-200	00746	MCR03-F-1001
R58	0699-3947	1	RESISTOR 1K +-1% .063W TKF TC0+-200	00746	MCR03-F-1001
R59	0699-3939	1	RESISTOR 422 +-1% .063W TKF TC0+-200	09891	RK73H1J4220F
R60	0699-3921	1	RESISTOR 75 +-1% .063W TKF TC0+-200	00746	MCR03-F-75R0
R61	0699-3925	1	RESISTOR 110 +-1% .063W TKF TC0+-200	00746	MCR03-F-1100
R62	0699-3941	1	RESISTOR 511 +-1% .063W TKF TC0+-200	00746	MCR03-F-5110
R63	0699-3947	1	RESISTOR 1K +-1% .063W TKF TC0+-200	00746	MCR03-F-1001
R64	0699-3947	1	RESISTOR 1K +-1% .063W TKF TC0+-200	00746	MCR03-F-1001
R65	0699-3934	1	RESISTOR 261 +-1% .063W TKF TC0+-200	09891	RK73H1J2610F
R66	0699-3933	1	RESISTOR 237 +-1% .063W TKF TC0+-200	00746	MCR03-F-2370
R67	0699-3932	1	RESISTOR 215 +-1% .063W TKF TC0+-200	00746	MCR03-F-2150
R68	0699-3912	1	RESISTOR 28.7 +-1% .063W TKF TC0+-200	05524	CRCW060328R7F
R69	0699-3947	1	RESISTOR 1K +-1% .063W TKF TC0+-200	00746	MCR03-F-1001
R70	0699-3947	1	RESISTOR 1K +-1% .063W TKF TC0+-200	00746	MCR03-F-1001
R71	0699-3939	1	RESISTOR 422 +-1% .063W TKF TC0+-200	09891	RK73H1J4220F
R72	0699-3933	1	RESISTOR 237 +-1% .063W TKF TC0+-200	00746	MCR03-F-2370
R73	0699-3959	1	RESISTOR 3.16K +-1% .063W TKF TC0+-200	00746	MCR03-F-3161
R74	0699-3968	1	RESISTOR 8.25K +-1% .063W TKF TC0+-200	09891	RK73H1J8251F
R75	0699-3939	1	RESISTOR 422 +-1% .063W TKF TC0+-200	09891	RK73H1J4220F
R76	0699-3901	1	RESISTOR 10 +-1% .063W TKF TC0+-200	00746	MCR03-F-10R0

Agilent Part Number E4401-60183
21.4 MHz IF

Reference Designator	HP Part Number	Qty	Description	Mgr Code	Mfr Part Number
R100	0699-3955	1	RESISTOR 2.15K +-1% .063W TKF TC0+-200	09891	RK73H1J2151F
R101	0699-3947	1	RESISTOR 1K +-1% .063W TKF TC0+-200	00746	MCR03-F-1001
R102	0699-3955	1	RESISTOR 2.15K +-1% .063W TKF TC0+-200	09891	RK73H1J2151F
R103	0699-3947	1	RESISTOR 1K +-1% .063W TKF TC0+-200	00746	MCR03-F-1001
R104	0699-3947	1	RESISTOR 1K +-1% .063W TKF TC0+-200	00746	MCR03-F-1001
R105	0699-3901	1	RESISTOR 10 +-1% .063W TKF TC0+-200	00746	MCR03-F-10R0
R106	0699-3955	1	RESISTOR 2.15K +-1% .063W TKF TC0+-200	09891	RK73H1J2151F
R107	0699-3955	1	RESISTOR 2.15K +-1% .063W TKF TC0+-200	09891	RK73H1J2151F
R108	0699-3932	1	RESISTOR 215 +-1% .063W TKF TC0+-200	00746	MCR03-F-2150
R109	0699-3947	1	RESISTOR 1K +-1% .063W TKF TC0+-200	00746	MCR03-F-1001
R110	0699-3919	1	RESISTOR 61.9 +-1% .063W TKF TC0+-200	05524	CRCW060361R9F
R111	0699-3950	1	RESISTOR 1.33K +-1% .063W TKF TC0+-200	09891	RK73H1J1331F
R112	0699-3944	1	RESISTOR 750 +-1% .063W TKF TC0+-200	09891	RK73H1J7500F
R113	0699-3939	1	RESISTOR 422 +-1% .063W TKF TC0+-200	09891	RK73H1J4220F
R114	0699-3924	1	RESISTOR 100 +-1% .063W TKF TC0+-200	00746	MCR03-F-1000
R115	0699-3901	1	RESISTOR 10 +-1% .063W TKF TC0+-200	00746	MCR03-F-10R0
R116	0699-3955	1	RESISTOR 2.15K +-1% .063W TKF TC0+-200	09891	RK73H1J2151F
R117	0699-4016	1	RESISTOR 1M +-1% .063W TKF TC0+-200	00746	MCR03-F-1004
R118	0699-3944	1	RESISTOR 750 +-1% .063W TKF TC0+-200	09891	RK73H1J7500F
R119	0699-3901	1	RESISTOR 10 +-1% .063W TKF TC0+-200	00746	MCR03-F-10R0
R120	0699-4016	1	RESISTOR 1M +-1% .063W TKF TC0+-200	00746	MCR03-F-1004
R121	0699-3947	1	RESISTOR 1K +-1% .063W TKF TC0+-200	00746	MCR03-F-1001
R122	0699-3911	1	RESISTOR 26.1 +-1% .063W TKF TC0+-200	05524	CRCW060326R1F
R123	0699-3939	1	RESISTOR 422 +-1% .063W TKF TC0+-200	09891	RK73H1J4220F
R124	0699-4001	1	RESISTOR 215K +-1% .063W TKF TC0+-200	09891	RK73H1J2153F
R125	0699-3955	1	RESISTOR 2.15K +-1% .063W TKF TC0+-200	09891	RK73H1J2151F
R126	0699-3955	1	RESISTOR 2.15K +-1% .063W TKF TC0+-200	09891	RK73H1J2151F
R127	0699-3955	1	RESISTOR 2.15K +-1% .063W TKF TC0+-200	09891	RK73H1J2151F
R128	0699-3943	1	RESISTOR 681 +-1% .063W TKF TC0+-200	00746	MCR03-F-6810
R129	0699-3955	1	RESISTOR 2.15K +-1% .063W TKF TC0+-200	09891	RK73H1J2151F

Scans by ArtekMedia => 2009

Agilent Part Number E4401-60183
21.4 MHz IF

Reference Designator	HP Part Number	Qty	Description	Mgr Code	Mfr Part Number
R130	0699-3932	1	RESISTOR 215 +-1% .063W TKF TC0+-200	00746	MCR03-F-2150
R131	0699-3924	1	RESISTOR 100 +-1% .063W TKF TC0+-200	00746	MCR03-F-1000
R132	0699-3901	1	RESISTOR 10 +-1% .063W TKF TC0+-200	00746	MCR03-F-10R0
R133	0699-3946	1	RESISTOR 909 +-1% .063W TKF TC0+-200	00746	MCR03-F-9090
R134	0699-3946	1	RESISTOR 909 +-1% .063W TKF TC0+-200	00746	MCR03-F-9090
R135	0699-3945	1	RESISTOR 825 +-1% .063W TKF TC0+-200	00746	MCR03-F-8250
R136	0699-3965	1	RESISTOR 6.19K +-1% .063W TKF TC0+-200	09891	RK73H1J6191F
R137	0699-3367	1	RESISTOR 5.62K +-1% .0625W TKF TC0+-200	00746	MCR03-F-5621
R138	0699-3901	1	RESISTOR 10 +-1% .063W TKF TC0+-200	00746	MCR03-F-10R0
R139	0699-3947	1	RESISTOR 1K +-1% .063W TKF TC0+-200	00746	MCR03-F-1001
R140	0699-4016	1	RESISTOR 1M +-1% .063W TKF TC0+-200	00746	MCR03-F-1004
R150	0699-3955	1	RESISTOR 2.15K +-1% .063W TKF TC0+-200	09891	RK73H1J2151F
R151	0699-3947	1	RESISTOR 1K +-1% .063W TKF TC0+-200	00746	MCR03-F-1001
R152	0699-3947	1	RESISTOR 1K +-1% .063W TKF TC0+-200	00746	MCR03-F-1001
R153	0699-3955	1	RESISTOR 2.15K +-1% .063W TKF TC0+-200	09891	RK73H1J2151F
R154	0699-4001	1	RESISTOR 215K +-1% .063W TKF TC0+-200	09891	RK73H1J2153F
R155	0699-3955	1	RESISTOR 2.15K +-1% .063W TKF TC0+-200	09891	RK73H1J2151F
R156	0699-3955	1	RESISTOR 2.15K +-1% .063W TKF TC0+-200	09891	RK73H1J2151F
R157	0699-3932	1	RESISTOR 215 +-1% .063W TKF TC0+-200	00746	MCR03-F-2150
R158	0699-3947	1	RESISTOR 1K +-1% .063W TKF TC0+-200	00746	MCR03-F-1001
R159	0699-3919	1	RESISTOR 61.9 +-1% .063W TKF TC0+-200	05524	CRCW060361R9F
R160	0699-3950	1	RESISTOR 1.33K +-1% .063W TKF TC0+-200	09891	RK73H1J1331F
R161	0699-3944	1	RESISTOR 750 +-1% .063W TKF TC0+-200	09891	RK73H1J7500F
R162	0699-3924	1	RESISTOR 100 +-1% .063W TKF TC0+-200	00746	MCR03-F-1000
R163	0699-3947	1	RESISTOR 1K +-1% .063W TKF TC0+-200	00746	MCR03-F-1001
R164	0699-3901	1	RESISTOR 10 +-1% .063W TKF TC0+-200	00746	MCR03-F-10R0
R165	0699-3955	1	RESISTOR 2.15K +-1% .063W TKF TC0+-200	09891	RK73H1J2151F
R166	0699-4016	1	RESISTOR 1M +-1% .063W TKF TC0+-200	00746	MCR03-F-1004
R167	0699-3947	1	RESISTOR 1K +-1% .063W TKF TC0+-200	00746	MCR03-F-1001
R168	0699-3901	1	RESISTOR 10 +-1% .063W TKF TC0+-200	00746	MCR03-F-10R0

Agilent Part Number E4401-60183
21.4 MHz IF

Reference Designator	HP Part Number	Qty	Description	Mgr Code	Mfr Part Number
R169	0699-3947	1	RESISTOR 1K +-1% .063W TKF TC0+-200	00746	MCR03-F-1001
R170	0699-3947	1	RESISTOR 1K +-1% .063W TKF TC0+-200	00746	MCR03-F-1001
R171	0699-3939	1	RESISTOR 422 +-1% .063W TKF TC0+-200	09891	RK73H1J4220F
R172	0699-3911	1	RESISTOR 26.1 +-1% .063W TKF TC0+-200	05524	CRCW060326R1F
R173	0699-4001	1	RESISTOR 215K +-1% .063W TKF TC0+-200	09891	RK73H1J2153F
R174	0699-3955	1	RESISTOR 2.15K +-1% .063W TKF TC0+-200	09891	RK73H1J2151F
R175	0699-3955	1	RESISTOR 2.15K +-1% .063W TKF TC0+-200	09891	RK73H1J2151F
R176	0699-3955	1	RESISTOR 2.15K +-1% .063W TKF TC0+-200	09891	RK73H1J2151F
R177	0699-3943	1	RESISTOR 681 +-1% .063W TKF TC0+-200	00746	MCR03-F-6810
R178	0699-3955	1	RESISTOR 2.15K +-1% .063W TKF TC0+-200	09891	RK73H1J2151F
R179	0699-3932	1	RESISTOR 215 +-1% .063W TKF TC0+-200	00746	MCR03-F-2150
R180	0699-3924	1	RESISTOR 100 +-1% .063W TKF TC0+-200	00746	MCR03-F-1000
R181	0699-3901	1	RESISTOR 10 +-1% .063W TKF TC0+-200	00746	MCR03-F-10R0
R182	0699-3946	1	RESISTOR 909 +-1% .063W TKF TC0+-200	00746	MCR03-F-9090
R183	0699-3946	1	RESISTOR 909 +-1% .063W TKF TC0+-200	00746	MCR03-F-9090
R184	0699-3945	1	RESISTOR 825 +-1% .063W TKF TC0+-200	00746	MCR03-F-8250
R185	0699-3965	1	RESISTOR 6.19K +-1% .063W TKF TC0+-200	09891	RK73H1J6191F
R186	0699-3367	1	RESISTOR 5.62K +-1% .0625W TKF TC0+-200	00746	MCR03-F-5621
R187	0699-3901	1	RESISTOR 10 +-1% .063W TKF TC0+-200	00746	MCR03-F-10R0
R188	0699-3947	1	RESISTOR 1K +-1% .063W TKF TC0+-200	00746	MCR03-F-1001
R189	0699-4016	1	RESISTOR 1M +-1% .063W TKF TC0+-200	00746	MCR03-F-1004
R190	0699-4016	1	RESISTOR 1M +-1% .063W TKF TC0+-200	00746	MCR03-F-1004
R200	0699-3947	1	RESISTOR 1K +-1% .063W TKF TC0+-200	00746	MCR03-F-1001
R201	0699-3955	1	RESISTOR 2.15K +-1% .063W TKF TC0+-200	09891	RK73H1J2151F
R202	0699-3947	1	RESISTOR 1K +-1% .063W TKF TC0+-200	00746	MCR03-F-1001
R203	0699-4001	1	RESISTOR 215K +-1% .063W TKF TC0+-200	09891	RK73H1J2153F
R204	0699-3955	1	RESISTOR 2.15K +-1% .063W TKF TC0+-200	09891	RK73H1J2151F
R205	0699-3955	1	RESISTOR 2.15K +-1% .063W TKF TC0+-200	09891	RK73H1J2151F
R206	0699-3947	1	RESISTOR 1K +-1% .063W TKF TC0+-200	00746	MCR03-F-1001
R207	0699-3919	1	RESISTOR 61.9 +-1% .063W TKF TC0+-200	05524	CRCW060361R9F

Scans by ArtekMedia => 2009

Agilent Part Number E4401-60183
21.4 MHz IF

Reference Designator	HP Part Number	Qty	Description	Mgr Code	Mfr Part Number
R208	0699-3950	1	RESISTOR 1.33K +-1% .063W TKF TC0+-200	09891	RK73H1J1331F
R209	0699-3944	1	RESISTOR 750 +-1% .063W TKF TC0+-200	09891	RK73H1J7500F
R210	0699-3924	1	RESISTOR 100 +-1% .063W TKF TC0+-200	00746	MCR03-F-1000
R211	0699-3947	1	RESISTOR 1K +-1% .063W TKF TC0+-200	00746	MCR03-F-1001
R212	0699-3901	1	RESISTOR 10 +-1% .063W TKF TC0+-200	00746	MCR03-F-10R0
R213	0699-3955	1	RESISTOR 2.15K +-1% .063W TKF TC0+-200	09891	RK73H1J2151F
R214	0699-4016	1	RESISTOR 1M +-1% .063W TKF TC0+-200	00746	MCR03-F-1004
R215	0699-3947	1	RESISTOR 1K +-1% .063W TKF TC0+-200	00746	MCR03-F-1001
R216	0699-3901	1	RESISTOR 10 +-1% .063W TKF TC0+-200	00746	MCR03-F-10R0
R217	0699-3947	1	RESISTOR 1K +-1% .063W TKF TC0+-200	00746	MCR03-F-1001
R218	0699-3947	1	RESISTOR 1K +-1% .063W TKF TC0+-200	00746	MCR03-F-1001
R219	0699-3911	1	RESISTOR 26.1 +-1% .063W TKF TC0+-200	05524	CRCW060326R1F
R220	0699-3955	1	RESISTOR 2.15K +-1% .063W TKF TC0+-200	09891	RK73H1J2151F
R221	0699-3939	1	RESISTOR 422 +-1% .063W TKF TC0+-200	09891	RK73H1J4220F
R222	0699-4001	1	RESISTOR 215K +-1% .063W TKF TC0+-200	09891	RK73H1J2153F
R223	0699-3955	1	RESISTOR 2.15K +-1% .063W TKF TC0+-200	09891	RK73H1J2151F
R224	0699-3955	1	RESISTOR 2.15K +-1% .063W TKF TC0+-200	09891	RK73H1J2151F
R225	0699-3955	1	RESISTOR 2.15K +-1% .063W TKF TC0+-200	09891	RK73H1J2151F
R226	0699-3943	1	RESISTOR 681 +-1% .063W TKF TC0+-200	00746	MCR03-F-6810
R227	0699-3955	1	RESISTOR 2.15K +-1% .063W TKF TC0+-200	09891	RK73H1J2151F
R228	0699-3932	1	RESISTOR 215 +-1% .063W TKF TC0+-200	00746	MCR03-F-2150
R229	0699-3932	1	RESISTOR 215 +-1% .063W TKF TC0+-200	00746	MCR03-F-2150
R230	0699-3924	1	RESISTOR 100 +-1% .063W TKF TC0+-200	00746	MCR03-F-1000
R231	0699-3901	1	RESISTOR 10 +-1% .063W TKF TC0+-200	00746	MCR03-F-10R0
R232	0699-3946	1	RESISTOR 909 +-1% .063W TKF TC0+-200	00746	MCR03-F-9090
R233	0699-3946	1	RESISTOR 909 +-1% .063W TKF TC0+-200	00746	MCR03-F-9090
R234	0699-3945	1	RESISTOR 825 +-1% .063W TKF TC0+-200	00746	MCR03-F-8250
R235	0699-3965	1	RESISTOR 6.19K +-1% .063W TKF TC0+-200	09891	RK73H1J6191F
R236	0699-3367	1	RESISTOR 5.62K +-1% .0625W TKF TC0+-200	00746	MCR03-F-5621
R237	0699-3901	1	RESISTOR 10 +-1% .063W TKF TC0+-200	00746	MCR03-F-10R0

Agilent Part Number E4401-60183
21.4 MHz IF

Reference Designator	HP Part Number	Qty	Description	Mgr Code	Mfr Part Number
R238	0699-3947	1	RESISTOR 1K +-1% .063W TKF TC0+-200	00746	MCR03-F-1001
R239	0699-4016	1	RESISTOR 1M +-1% .063W TKF TC0+-200	00746	MCR03-F-1004
R240	0699-4016	1	RESISTOR 1M +-1% .063W TKF TC0+-200	00746	MCR03-F-1004
R250	0699-3947	1	RESISTOR 1K +-1% .063W TKF TC0+-200	00746	MCR03-F-1001
R251	0699-3947	1	RESISTOR 1K +-1% .063W TKF TC0+-200	00746	MCR03-F-1001
R252	0699-4001	1	RESISTOR 215K +-1% .063W TKF TC0+-200	09891	RK73H1J2153F
R253	0699-3947	1	RESISTOR 1K +-1% .063W TKF TC0+-200	00746	MCR03-F-1001
R254	0699-3919	1	RESISTOR 61.9 +-1% .063W TKF TC0+-200	05524	CRCW060361R9F
R255	0699-3950	1	RESISTOR 1.33K +-1% .063W TKF TC0+-200	09891	RK73H1J1331F
R256	0699-3944	1	RESISTOR 750 +-1% .063W TKF TC0+-200	09891	RK73H1J7500F
R257	0699-3924	1	RESISTOR 100 +-1% .063W TKF TC0+-200	00746	MCR03-F-1000
R258	0699-3947	1	RESISTOR 1K +-1% .063W TKF TC0+-200	00746	MCR03-F-1001
R259	0699-3901	1	RESISTOR 10 +-1% .063W TKF TC0+-200	00746	MCR03-F-10R0
R260	0699-3955	1	RESISTOR 2.15K +-1% .063W TKF TC0+-200	09891	RK73H1J2151F
R261	0699-4016	1	RESISTOR 1M +-1% .063W TKF TC0+-200	00746	MCR03-F-1004
R262	0699-3947	1	RESISTOR 1K +-1% .063W TKF TC0+-200	00746	MCR03-F-1001
R263	0699-3901	1	RESISTOR 10 +-1% .063W TKF TC0+-200	00746	MCR03-F-10R0
R264	0699-3947	1	RESISTOR 1K +-1% .063W TKF TC0+-200	00746	MCR03-F-1001
R265	0699-3911	1	RESISTOR 26.1 +-1% .063W TKF TC0+-200	05524	CRCW060326R1F
R266	0699-3947	1	RESISTOR 1K +-1% .063W TKF TC0+-200	00746	MCR03-F-1001
R267	0699-3939	1	RESISTOR 422 +-1% .063W TKF TC0+-200	09891	RK73H1J4220F
R268	0699-3955	1	RESISTOR 2.15K +-1% .063W TKF TC0+-200	09891	RK73H1J2151F
R269	0699-3955	1	RESISTOR 2.15K +-1% .063W TKF TC0+-200	09891	RK73H1J2151F
R270	0699-4001	1	RESISTOR 215K +-1% .063W TKF TC0+-200	09891	RK73H1J2153F
R271	0699-3955	1	RESISTOR 2.15K +-1% .063W TKF TC0+-200	09891	RK73H1J2151F
R272	0699-3955	1	RESISTOR 2.15K +-1% .063W TKF TC0+-200	09891	RK73H1J2151F
R273	0699-3947	1	RESISTOR 1K +-1% .063W TKF TC0+-200	00746	MCR03-F-1001
R274	0699-3955	1	RESISTOR 2.15K +-1% .063W TKF TC0+-200	09891	RK73H1J2151F
R275	0699-3959	1	RESISTOR 3.16K +-1% .063W TKF TC0+-200	00746	MCR03-F-3161
R276	0699-3955	1	RESISTOR 2.15K +-1% .063W TKF TC0+-200	09891	RK73H1J2151F

Scans by ArtekMedia => 2009

Agilent Part Number E4401-60183
21.4 MHz IF

Reference Designator	HP Part Number	Qty	Description	Mgr Code	Mfr Part Number
R277	0699-3932	1	RESISTOR 215 +-1% .063W TKF TC0+-200	00746	MCR03-F-2150
R278	0699-3941	1	RESISTOR 511 +-1% .063W TKF TC0+-200	00746	MCR03-F-5110
R279	0699-3959	1	RESISTOR 3.16K +-1% .063W TKF TC0+-200	00746	MCR03-F-3161
R280	0699-3947	1	RESISTOR 1K +-1% .063W TKF TC0+-200	00746	MCR03-F-1001
R281	0699-4016	1	RESISTOR 1M +-1% .063W TKF TC0+-200	00746	MCR03-F-1004
R282	0699-4016	1	RESISTOR 1M +-1% .063W TKF TC0+-200	00746	MCR03-F-1004
R300	0699-3947	1	RESISTOR 1K +-1% .063W TKF TC0+-200	00746	MCR03-F-1001
R301	0699-3932	1	RESISTOR 215 +-1% .063W TKF TC0+-200	00746	MCR03-F-2150
R302	0699-4016	1	RESISTOR 1M +-1% .063W TKF TC0+-200	00746	MCR03-F-1004
R303	0699-4016	1	RESISTOR 1M +-1% .063W TKF TC0+-200	00746	MCR03-F-1004
R350	0699-3918	1	RESISTOR 51.1 +-1% .063W TKF TC0+-200	00746	MCR03-F-51R1
R351	0699-3901	1	RESISTOR 10 +-1% .063W TKF TC0+-200	00746	MCR03-F-10R0
R352	0699-3947	1	RESISTOR 1K +-1% .063W TKF TC0+-200	00746	MCR03-F-1001
R353	0699-3941	1	RESISTOR 511 +-1% .063W TKF TC0+-200	00746	MCR03-F-5110
R354	0699-3918	1	RESISTOR 51.1 +-1% .063W TKF TC0+-200	00746	MCR03-F-51R1
R355	0699-3942	1	RESISTOR 619 +-1% .063W TKF TC0+-200	00746	MCR03-F-6190
R356	0699-3947	1	RESISTOR 1K +-1% .063W TKF TC0+-200	00746	MCR03-F-1001
R357	0699-3962	1	RESISTOR 4.22K +-1% .063W TKF TC0+-200	09891	RK73H1J4221F
R358	0699-3947	1	RESISTOR 1K +-1% .063W TKF TC0+-200	00746	MCR03-F-1001
R359	0699-4016	1	RESISTOR 1M +-1% .063W TKF TC0+-200	00746	MCR03-F-1004
R360	0699-3947	1	RESISTOR 1K +-1% .063W TKF TC0+-200	00746	MCR03-F-1001
R361	0699-3947	1	RESISTOR 1K +-1% .063W TKF TC0+-200	00746	MCR03-F-1001
R400	0699-3931	1	RESISTOR 196 +-1% .063W TKF TC0+-200	09891	RK73H1J1960F
R401	0699-3931	1	RESISTOR 196 +-1% .063W TKF TC0+-200	09891	RK73H1J1960F
R402	0699-4361	1	RESISTOR 1 +-5% .063W TKF TC0+-500	09891	RM73B1J1ROJ
R450	0699-3947	1	RESISTOR 1K +-1% .063W TKF TC0+-200	00746	MCR03-F-1001
R451	0699-3947	1	RESISTOR 1K +-1% .063W TKF TC0+-200	00746	MCR03-F-1001
R452	0699-3955	1	RESISTOR 2.15K +-1% .063W TKF TC0+-200	09891	RK73H1J2151F
R453	0699-3947	1	RESISTOR 1K +-1% .063W TKF TC0+-200	00746	MCR03-F-1001
R454	0699-3947	1	RESISTOR 1K +-1% .063W TKF TC0+-200	00746	MCR03-F-1001

Agilent Part Number E4401-60183
21.4 MHz IF

Reference Designator	HP Part Number	Qty	Description	Mgr Code	Mfr Part Number
R455	0699-4016	1	RESISTOR 1M +-1% .063W TKF TC0+-200	00746	MCR03-F-1004
R456	0699-4016	1	RESISTOR 1M +-1% .063W TKF TC0+-200	00746	MCR03-F-1004
R457	0699-3947	1	RESISTOR 1K +-1% .063W TKF TC0+-200	00746	MCR03-F-1001
R458	0699-4016	1	RESISTOR 1M +-1% .063W TKF TC0+-200	00746	MCR03-F-1004
R459	0699-3959	1	RESISTOR 3.16K +-1% .063W TKF TC0+-200	00746	MCR03-F-3161
R460	0699-3366	1	RESISTOR 562 +-1% .065W TKF TC0+-200	09891	RK73H1J5620F
R461	0699-3947	1	RESISTOR 1K +-1% .063W TKF TC0+-200	00746	MCR03-F-1001
R462	0699-3918	1	RESISTOR 51.1 +-1% .063W TKF TC0+-200	00746	MCR03-F-51R1
R463	0699-3901	1	RESISTOR 10 +-1% .063W TKF TC0+-200	00746	MCR03-F-10R0
R464	0699-3918	1	RESISTOR 51.1 +-1% .063W TKF TC0+-200	00746	MCR03-F-51R1
R465	0699-3941	1	RESISTOR 511 +-1% .063W TKF TC0+-200	00746	MCR03-F-5110
R466	0699-3947	1	RESISTOR 1K +-1% .063W TKF TC0+-200	00746	MCR03-F-1001
R501	0699-3956	1	RESISTOR 2.37K +-1% .063W TKF TC0+-200	09891	RK73H1J2371F
R502	0699-3941	1	RESISTOR 511 +-1% .063W TKF TC0+-200	00746	MCR03-F-5110
R503	0699-3947	1	RESISTOR 1K +-1% .063W TKF TC0+-200	00746	MCR03-F-1001
R504	0699-3955	1	RESISTOR 2.15K +-1% .063W TKF TC0+-200	09891	RK73H1J2151F
R505	0699-3955	1	RESISTOR 2.15K +-1% .063W TKF TC0+-200	09891	RK73H1J2151F
R506	0699-3924	1	RESISTOR 100 +-1% .063W TKF TC0+-200	00746	MCR03-F-1000
R507	0699-3936	1	RESISTOR 316 +-1% .063W TKF TC0+-200	00746	MCR03-F-3160
R508	0699-3955	1	RESISTOR 2.15K +-1% .063W TKF TC0+-200	09891	RK73H1J2151F
R509	0699-3936	1	RESISTOR 316 +-1% .063W TKF TC0+-200	00746	MCR03-F-3160
R550	0699-3924	1	RESISTOR 100 +-1% .063W TKF TC0+-200	00746	MCR03-F-1000
R551	0699-3947	1	RESISTOR 1K +-1% .063W TKF TC0+-200	00746	MCR03-F-1001
R552	0699-3931	1	RESISTOR 196 +-1% .063W TKF TC0+-200	09891	RK73H1J1960F
R553	0699-3939	1	RESISTOR 422 +-1% .063W TKF TC0+-200	09891	RK73H1J4220F
R554	0699-3947	1	RESISTOR 1K +-1% .063W TKF TC0+-200	00746	MCR03-F-1001
R555	0699-3947	1	RESISTOR 1K +-1% .063W TKF TC0+-200	00746	MCR03-F-1001
R556	0699-3936	1	RESISTOR 316 +-1% .063W TKF TC0+-200	00746	MCR03-F-3160
R557	0699-3924	1	RESISTOR 100 +-1% .063W TKF TC0+-200	00746	MCR03-F-1000
R558	0699-3947	1	RESISTOR 1K +-1% .063W TKF TC0+-200	00746	MCR03-F-1001

Scans by ArtekMedia => 2009

Agilent Part Number E4401-60183
21.4 MHz IF

Reference Designator	HP Part Number	Qty	Description	Mgr Code	Mfr Part Number
R559	0699-3931	1	RESISTOR 196 +-1% .063W TKF TC0+-200	09891	RK73H1J1960F
R560	0699-3931	1	RESISTOR 196 +-1% .063W TKF TC0+-200	09891	RK73H1J1960F
R561	0699-3936	1	RESISTOR 316 +-1% .063W TKF TC0+-200	00746	MCR03-F-3160
R562	0699-3939	1	RESISTOR 422 +-1% .063W TKF TC0+-200	09891	RK73H1J4220F
R563	0699-3947	1	RESISTOR 1K +-1% .063W TKF TC0+-200	00746	MCR03-F-1001
R564	0699-3947	1	RESISTOR 1K +-1% .063W TKF TC0+-200	00746	MCR03-F-1001
R565	0699-3901	1	RESISTOR 10 +-1% .063W TKF TC0+-200	00746	MCR03-F-10R0
R566	0699-3901	1	RESISTOR 10 +-1% .063W TKF TC0+-200	00746	MCR03-F-10R0
R600	0699-3931	1	RESISTOR 196 +-1% .063W TKF TC0+-200	09891	RK73H1J1960F
R601	0699-3931	1	RESISTOR 196 +-1% .063W TKF TC0+-200	09891	RK73H1J1960F
R602	0699-3901	1	RESISTOR 10 +-1% .063W TKF TC0+-200	00746	MCR03-F-10R0
R603	0699-3901	1	RESISTOR 10 +-1% .063W TKF TC0+-200	00746	MCR03-F-10R0
R604	0699-3901	1	RESISTOR 10 +-1% .063W TKF TC0+-200	00746	MCR03-F-10R0
R605	0699-3941	1	RESISTOR 511 +-1% .063W TKF TC0+-200	00746	MCR03-F-5110
R606	0699-3941	1	RESISTOR 511 +-1% .063W TKF TC0+-200	00746	MCR03-F-5110
R607	0699-3901	1	RESISTOR 10 +-1% .063W TKF TC0+-200	00746	MCR03-F-10R0
R650	0699-3962	1	RESISTOR 4.22K +-1% .063W TKF TC0+-200	09891	RK73H1J4221F
R651	0699-3967	1	RESISTOR 7.5K +-1% .063W TKF TC0+-200	09891	RK73H1J7501F
R652	0699-3968	1	RESISTOR 8.25K +-1% .063W TKF TC0+-200	09891	RK73H1J8251F
R653	0699-3959	1	RESISTOR 3.16K +-1% .063W TKF TC0+-200	00746	MCR03-F-3161
R654	0699-3954	1	RESISTOR 1.96K +-1% .063W TKF TC0+-200	09891	RK73H1J1961F
R655	0699-3955	1	RESISTOR 2.15K +-1% .063W TKF TC0+-200	09891	RK73H1J2151F
R656	0699-3947	1	RESISTOR 1K +-1% .063W TKF TC0+-200	00746	MCR03-F-1001
R657	0699-3947	1	RESISTOR 1K +-1% .063W TKF TC0+-200	00746	MCR03-F-1001
R658	0699-3918	1	RESISTOR 51.1 +-1% .063W TKF TC0+-200	00746	MCR03-F-51R1
R700	0699-3924	1	RESISTOR 100 +-1% .063W TKF TC0+-200	00746	MCR03-F-1000
R701	0699-3978	1	RESISTOR 21.5K +-1% .063W TKF TC0+-200	09891	RK73H1J2152F
R702	0699-3916	1	RESISTOR 42.2 +-1% .063W TKF TC0+-200	09891	RK73H1J42R2F
R703	0699-3924	1	RESISTOR 100 +-1% .063W TKF TC0+-200	00746	MCR03-F-1000
R704	0699-3915	1	RESISTOR 38.3 +-1% .063W TKF TC0+-200	09891	RK73H1J38R3F

Agilent Part Number E4401-60183
21.4 MHz IF

Reference Designator	HP Part Number	Qty	Description	Mgr Code	Mfr Part Number
R705	0699-3999	1	RESISTOR 178K +-1% .063W TKF TC0+-200	09891	RK73H1J1783F
R750	0699-3933	1	RESISTOR 237 +-1% .063W TKF TC0+-200	00746	MCR03-F-2370
R751	0699-3991	1	RESISTOR 82.5K +-1% .063W TKF TC0+-200	09891	RK73H1J8252F
R752	0699-3966	1	RESISTOR 6.81K +-1% .063W TKF TC0+-200	09891	RK73H1J6811F
R753	0699-3991	1	RESISTOR 82.5K +-1% .063W TKF TC0+-200	09891	RK73H1J8252F
R754	0699-3938	1	RESISTOR 383 +-1% .063W TKF TC0+-200	00746	MCR03-F-3830
R755	0699-3991	1	RESISTOR 82.5K +-1% .063W TKF TC0+-200	09891	RK73H1J8252F
R756	0699-3966	1	RESISTOR 6.81K +-1% .063W TKF TC0+-200	09891	RK73H1J6811F
R757	0699-3938	1	RESISTOR 383 +-1% .063W TKF TC0+-200	00746	MCR03-F-3830
R758	0699-3991	1	RESISTOR 82.5K +-1% .063W TKF TC0+-200	09891	RK73H1J8252F
R759	0699-3933	1	RESISTOR 237 +-1% .063W TKF TC0+-200	00746	MCR03-F-2370
R760	0699-3966	1	RESISTOR 6.81K +-1% .063W TKF TC0+-200	09891	RK73H1J6811F
R761	0699-3966	1	RESISTOR 6.81K +-1% .063W TKF TC0+-200	09891	RK73H1J6811F
R800	0699-3993	1	RESISTOR 100K +-1% .063W TKF TC0+-200	09891	RK73H1J1003F
R801	0699-3987	1	RESISTOR 51.1K +-1% .063W TKF TC0+-200	09891	RK73H1J5112F
R802	0699-3968	1	RESISTOR 8.25K +-1% .063W TKF TC0+-200	09891	RK73H1J8251F
R803	0699-3981	1	RESISTOR 28.7K +-1% .063W TKF TC0+-200	09891	RK73H1J2872F
R804	0699-3967	1	RESISTOR 7.5K +-1% .063W TKF TC0+-200	09891	RK73H1J7501F
R805	0699-3965	1	RESISTOR 6.19K +-1% .063W TKF TC0+-200	09891	RK73H1J6191F
R806	0699-3981	1	RESISTOR 28.7K +-1% .063W TKF TC0+-200	09891	RK73H1J2872F
R807	0699-3968	1	RESISTOR 8.25K +-1% .063W TKF TC0+-200	09891	RK73H1J8251F
R808	0699-3981	1	RESISTOR 28.7K +-1% .063W TKF TC0+-200	09891	RK73H1J2872F
R809	0699-3987	1	RESISTOR 51.1K +-1% .063W TKF TC0+-200	09891	RK73H1J5112F
R810	0699-3968	1	RESISTOR 8.25K +-1% .063W TKF TC0+-200	09891	RK73H1J8251F
R811	0699-3967	1	RESISTOR 7.5K +-1% .063W TKF TC0+-200	09891	RK73H1J7501F
R812	0699-3981	1	RESISTOR 28.7K +-1% .063W TKF TC0+-200	09891	RK73H1J2872F
R813	0699-3947	1	RESISTOR 1K +-1% .063W TKF TC0+-200	00746	MCR03-F-1001
R814	0699-3987	1	RESISTOR 51.1K +-1% .063W TKF TC0+-200	09891	RK73H1J5112F
R815	0699-3993	1	RESISTOR 100K +-1% .063W TKF TC0+-200	09891	RK73H1J1003F
R816	0699-3965	1	RESISTOR 6.19K +-1% .063W TKF TC0+-200	09891	RK73H1J6191F

Scans by ArtekMedia => 2009

Agilent Part Number E4401-60183
21.4 MHz IF

Reference Designator	HP Part Number	Qty	Description	Mgr Code	Mfr Part Number
R817	0699-3981	1	RESISTOR 28.7K +-1% .063W TKF TC0+-200	09891	RK73H1J2872F
R818	0699-3981	1	RESISTOR 28.7K +-1% .063W TKF TC0+-200	09891	RK73H1J2872F
R819	0699-3987	1	RESISTOR 51.1K +-1% .063W TKF TC0+-200	09891	RK73H1J5112F
R820	0699-3981	1	RESISTOR 28.7K +-1% .063W TKF TC0+-200	09891	RK73H1J2872F
R821	0699-3968	1	RESISTOR 8.25K +-1% .063W TKF TC0+-200	09891	RK73H1J8251F
R822	0699-3981	1	RESISTOR 28.7K +-1% .063W TKF TC0+-200	09891	RK73H1J2872F
R823	0699-3981	1	RESISTOR 28.7K +-1% .063W TKF TC0+-200	09891	RK73H1J2872F
R824	0699-3965	1	RESISTOR 6.19K +-1% .063W TKF TC0+-200	09891	RK73H1J6191F
R825	0699-3965	1	RESISTOR 6.19K +-1% .063W TKF TC0+-200	09891	RK73H1J6191F
R826	0699-3981	1	RESISTOR 28.7K +-1% .063W TKF TC0+-200	09891	RK73H1J2872F
R827	0699-3981	1	RESISTOR 28.7K +-1% .063W TKF TC0+-200	09891	RK73H1J2872F
R828	0699-3967	1	RESISTOR 7.5K +-1% .063W TKF TC0+-200	09891	RK73H1J7501F
R829	0699-3947	1	RESISTOR 1K +-1% .063W TKF TC0+-200	00746	MCR03-F-1001
R830	0699-3965	1	RESISTOR 6.19K +-1% .063W TKF TC0+-200	09891	RK73H1J6191F
R831	0699-3967	1	RESISTOR 7.5K +-1% .063W TKF TC0+-200	09891	RK73H1J7501F
R832	0699-3993	1	RESISTOR 100K +-1% .063W TKF TC0+-200	09891	RK73H1J1003F
R833	0699-3967	1	RESISTOR 7.5K +-1% .063W TKF TC0+-200	09891	RK73H1J7501F
R834	0699-3981	1	RESISTOR 28.7K +-1% .063W TKF TC0+-200	09891	RK73H1J2872F
R835	0699-3981	1	RESISTOR 28.7K +-1% .063W TKF TC0+-200	09891	RK73H1J2872F
R836	0699-3993	1	RESISTOR 100K +-1% .063W TKF TC0+-200	09891	RK73H1J1003F
R837	0699-3981	1	RESISTOR 28.7K +-1% .063W TKF TC0+-200	09891	RK73H1J2872F
R838	0699-3967	1	RESISTOR 7.5K +-1% .063W TKF TC0+-200	09891	RK73H1J7501F
R839	0699-3967	1	RESISTOR 7.5K +-1% .063W TKF TC0+-200	09891	RK73H1J7501F
R840	0699-3967	1	RESISTOR 7.5K +-1% .063W TKF TC0+-200	09891	RK73H1J7501F
R841	0699-3965	1	RESISTOR 6.19K +-1% .063W TKF TC0+-200	09891	RK73H1J6191F
R842	0699-3987	1	RESISTOR 51.1K +-1% .063W TKF TC0+-200	09891	RK73H1J5112F
R843	0699-3967	1	RESISTOR 7.5K +-1% .063W TKF TC0+-200	09891	RK73H1J7501F
R844	0699-3968	1	RESISTOR 8.25K +-1% .063W TKF TC0+-200	09891	RK73H1J8251F
R845	0699-3947	1	RESISTOR 1K +-1% .063W TKF TC0+-200	00746	MCR03-F-1001
R846	0699-3967	1	RESISTOR 7.5K +-1% .063W TKF TC0+-200	09891	RK73H1J7501F

Agilent Part Number E4401-60183
21.4 MHz IF

Reference Designator	HP Part Number	Qty	Description	Mgr Code	Mfr Part Number
R847	0699-3968	1	RESISTOR 8.25K +-1% .063W TKF TC0+-200	09891	RK73H1J8251F
R848	0699-3981	1	RESISTOR 28.7K +-1% .063W TKF TC0+-200	09891	RK73H1J2872F
R849	0699-3987	1	RESISTOR 51.1K +-1% .063W TKF TC0+-200	09891	RK73H1J5112F
R850	0699-3993	1	RESISTOR 100K +-1% .063W TKF TC0+-200	09891	RK73H1J1003F
R851	0699-3993	1	RESISTOR 100K +-1% .063W TKF TC0+-200	09891	RK73H1J1003F
R852	0699-3987	1	RESISTOR 51.1K +-1% .063W TKF TC0+-200	09891	RK73H1J5112F
R853	0699-3981	1	RESISTOR 28.7K +-1% .063W TKF TC0+-200	09891	RK73H1J2872F
R854	0699-3968	1	RESISTOR 8.25K +-1% .063W TKF TC0+-200	09891	RK73H1J8251F
R855	0699-3981	1	RESISTOR 28.7K +-1% .063W TKF TC0+-200	09891	RK73H1J2872F
R856	0699-3981	1	RESISTOR 28.7K +-1% .063W TKF TC0+-200	09891	RK73H1J2872F
R857	0699-3965	1	RESISTOR 6.19K +-1% .063W TKF TC0+-200	09891	RK73H1J6191F
R858	0699-3987	1	RESISTOR 51.1K +-1% .063W TKF TC0+-200	09891	RK73H1J5112F
R859	0699-3981	1	RESISTOR 28.7K +-1% .063W TKF TC0+-200	09891	RK73H1J2872F
R860	0699-3981	1	RESISTOR 28.7K +-1% .063W TKF TC0+-200	09891	RK73H1J2872F
R861	0699-3968	1	RESISTOR 8.25K +-1% .063W TKF TC0+-200	09891	RK73H1J8251F
R862	0699-3981	1	RESISTOR 28.7K +-1% .063W TKF TC0+-200	09891	RK73H1J2872F
R863	0699-3955	1	RESISTOR 2.15K +-1% .063W TKF TC0+-200	09891	RK73H1J2151F
R864	0699-3367	1	RESISTOR 5.62K +-1% .0625W TKF TC0+-200	00746	MCR03-F-5621
R865	0699-3981	1	RESISTOR 28.7K +-1% .063W TKF TC0+-200	09891	RK73H1J2872F
R866	0699-3955	1	RESISTOR 2.15K +-1% .063W TKF TC0+-200	09891	RK73H1J2151F
R867	0699-2489	1	RESISTOR 10K +-0.1% .125W TF TC0+-25	01172	BLU-1206 10K .1% 25PPM
R868	0699-2489	1	RESISTOR 10K +-0.1% .125W TF TC0+-25	01172	BLU-1206 10K .1% 25PPM
R869	0699-2489	1	RESISTOR 10K +-0.1% .125W TF TC0+-25	01172	BLU-1206 10K .1% 25PPM
R870	0699-3911	1	RESISTOR 26.1 +-1% .063W TKF TC0+-200	05524	CRCW060326R1F
R871	0699-3911	1	RESISTOR 26.1 +-1% .063W TKF TC0+-200	05524	CRCW060326R1F
R872	0699-3911	1	RESISTOR 26.1 +-1% .063W TKF TC0+-200	05524	CRCW060326R1F
R873	0699-3911	1	RESISTOR 26.1 +-1% .063W TKF TC0+-200	05524	CRCW060326R1F

Scans by ArtekMedia => 2009

Agilent Part Number E4401-60183
21.4 MHz IF

Reference Designator	HP Part Number	Qty	Description	Mgr Code	Mfr Part Number
R874	0699-2489	1	RESISTOR 10K +-0.1% .125W TF TC0+-25	01172	BLU-1206 10K .1% 25PPM
R875	0699-2489	1	RESISTOR 10K +-0.1% .125W TF TC0+-25	01172	BLU-1206 10K .1% 25PPM
R876	0699-3965	1	RESISTOR 6.19K +-1% .063W TKF TC0+-200	09891	RK73H1J6191F
R877	0699-3921	1	RESISTOR 75 +-1% .063W TKF TC0+-200	00746	MCR03-F-75R0
R878	0699-3921	1	RESISTOR 75 +-1% .063W TKF TC0+-200	00746	MCR03-F-75R0
R879	0699-3921	1	RESISTOR 75 +-1% .063W TKF TC0+-200	00746	MCR03-F-75R0
T250	9100-5362	1	TRANSFORMER-BALUNMAGNETICCOUPLER	06353	458PT-1024(B5F)
T300	9100-5362	1	TRANSFORMER-BALUNMAGNETICCOUPLER	06353	458PT-1024(B5F)
T301	9100-5362	1	TRANSFORMER-BALUNMAGNETICCOUPLER	06353	458PT-1024(B5F)
T550	9100-5362	1	TRANSFORMER-BALUNMAGNETICCOUPLER	06353	458PT-1024(B5F)
T560	9100-5555	1	TRANSFORMER-PULSE; PRI IND: 155 nH	12396	TTH-13
T561	9100-5555	1	TRANSFORMER-PULSE; PRI IND: 155 nH	12396	TTH-13
T562	9100-5555	1	TRANSFORMER-PULSE; PRI IND: 155 nH	12396	TTH-13
T563	9100-5555	1	TRANSFORMER-PULSE; PRI IND: 155 nH	12396	TTH-13
T564	9100-5555	1	TRANSFORMER-PULSE; PRI IND: 155 nH	12396	TTH-13
U350	1826-2344	1	IC LOG-AMPL/ELEM WB 20 PIN PLCC	03285	AD640JP
U351	1826-2786	1	IC OP AMP VID-SPCL-FCTN SINGLE 8 PIN	03285	AD810AR
U400	1826-2869	1	IC LOG-AMPL/ELEM SINGLE 16 PIN	03285	AD42930
U450	1826-3034	1	IC OP AMP V-FOLR SINGLE 8 PIN PLSTC-SOIC	03285	AD603AR
U500	1826-2591	1	IC OP AMP WB SINGLE 8 PIN PLSTC-SOIC	03285	AD9617JR
U501	0955-1064	1	U-WAVE MIXER 1 GHZ MAX	02739	ADE-2ASK
U600	1826-1950	1	IC COMPARATOR HS SINGLE 8 PIN PLSTC-SOIC	10858	LT1016CS8
U601	1820-5937	1	IC FF CMOS/AC D-TYPE POS-EDGE-TRIG	02237	74AC74SC.
U650	1826-2961	1	IC OP AMP GP SINGLE 8 PIN PLSTC-SOIC	03285	AD817AR
U651	1826-2985	1	IC OP AMP HS DUAL 8 PIN PLSTC-SOIC	03285	AD826AR
U652	1826-2167	1	ANALOG MULTIPLEXER 8 CHNL 16-SOIC	05524	DG409DY
U700	1826-2379	1	IC OP AMP VID-SPCL-FCTN SINGLE 8 PIN	03285	AD829JR
U750	1826-3000	1	IC AUDIO AMPL LOW-NOISE DUAL 8 PIN	03285	OP275GS

Agilent Part Number E4401-60183
21.4 MHz IF

Reference Designator	HP Part Number	Qty	Description	Mgr Code	Mfr Part Number
U751	1826-3000	1	IC AUDIO AMPL LOW-NOISE DUAL 8 PIN	03285	OP275GS
U800	1826-1622	1	IC OP AMP LOW-BIAS-H-IMPD QUAD 14 PIN	01698	TL074CD
U801	1826-1622	1	IC OP AMP LOW-BIAS-H-IMPD QUAD 14 PIN	01698	TL074CD
U802	1826-3345	1	D/A 8-BIT 16-P-SOIC BPLR	03285	AD8803AR
U803	1826-1622	1	IC OP AMP LOW-BIAS-H-IMPD QUAD 14 PIN	01698	TL074CD
U804	1826-1622	1	IC OP AMP LOW-BIAS-H-IMPD QUAD 14 PIN	01698	TL074CD
U805	1826-3345	1	D/A 8-BIT 16-P-SOIC BPLR	03285	AD8803AR
U806	1826-1622	1	IC OP AMP LOW-BIAS-H-IMPD QUAD 14 PIN	01698	TL074CD
U807	1826-3345	1	D/A 8-BIT 16-P-SOIC BPLR	03285	AD8803AR
U808	1826-1622	1	IC OP AMP LOW-BIAS-H-IMPD QUAD 14 PIN	01698	TL074CD
U809	1826-1622	1	IC OP AMP LOW-BIAS-H-IMPD QUAD 14 PIN	01698	TL074CD
U810	1826-1622	1	IC OP AMP LOW-BIAS-H-IMPD QUAD 14 PIN	01698	TL074CD
U811	1826-3000	1	IC AUDIO AMPL LOW-NOISE DUAL 8 PIN	03285	OP275GS
U812	1826-1622	1	IC OP AMP LOW-BIAS-H-IMPD QUAD 14 PIN	01698	TL074CD
U813	1826-1838	1	IC PWR MGT-V-REF-FXD 4.95/5.05V 8 PINS	10858	LT1021DCS8-5
U814	1826-1622	1	IC OP AMP LOW-BIAS-H-IMPD QUAD 14 PIN	01698	TL074CD
U815	1826-1622	1	IC OP AMP LOW-BIAS-H-IMPD QUAD 14 PIN	01698	TL074CD
U816	E4401-80074	1	PGMD HDR U816	28480	E4401-80074
U817	E4401-80010	1	PAL	28480	E4401-80010
Y100	0410-4196		PRECISION FILTER SET CRYSTAL SET OF 5	02483	0410-4196
Y150	0410-4196		PRECISION FILTER SET CRYSTAL SET OF 5	02483	0410-4196
Y200	0410-4196		PRECISION FILTER SET CRYSTAL SET OF 5	02483	0410-4196
Y250	0410-4196		PRECISION FILTER SET CRYSTAL SET OF 5	02483	0410-4196
Y450	0410-4196		PRECISION FILTER SET CRYSTAL SET OF 5	02483	0410-4196

Scans by ArtekMedia => 2009

SYM	REVISIONS	APPROVED	DATE
A	AS ISSUED PCO 53-13630 IS		
B	CHANGED PER ECO 53-15021 /KS		

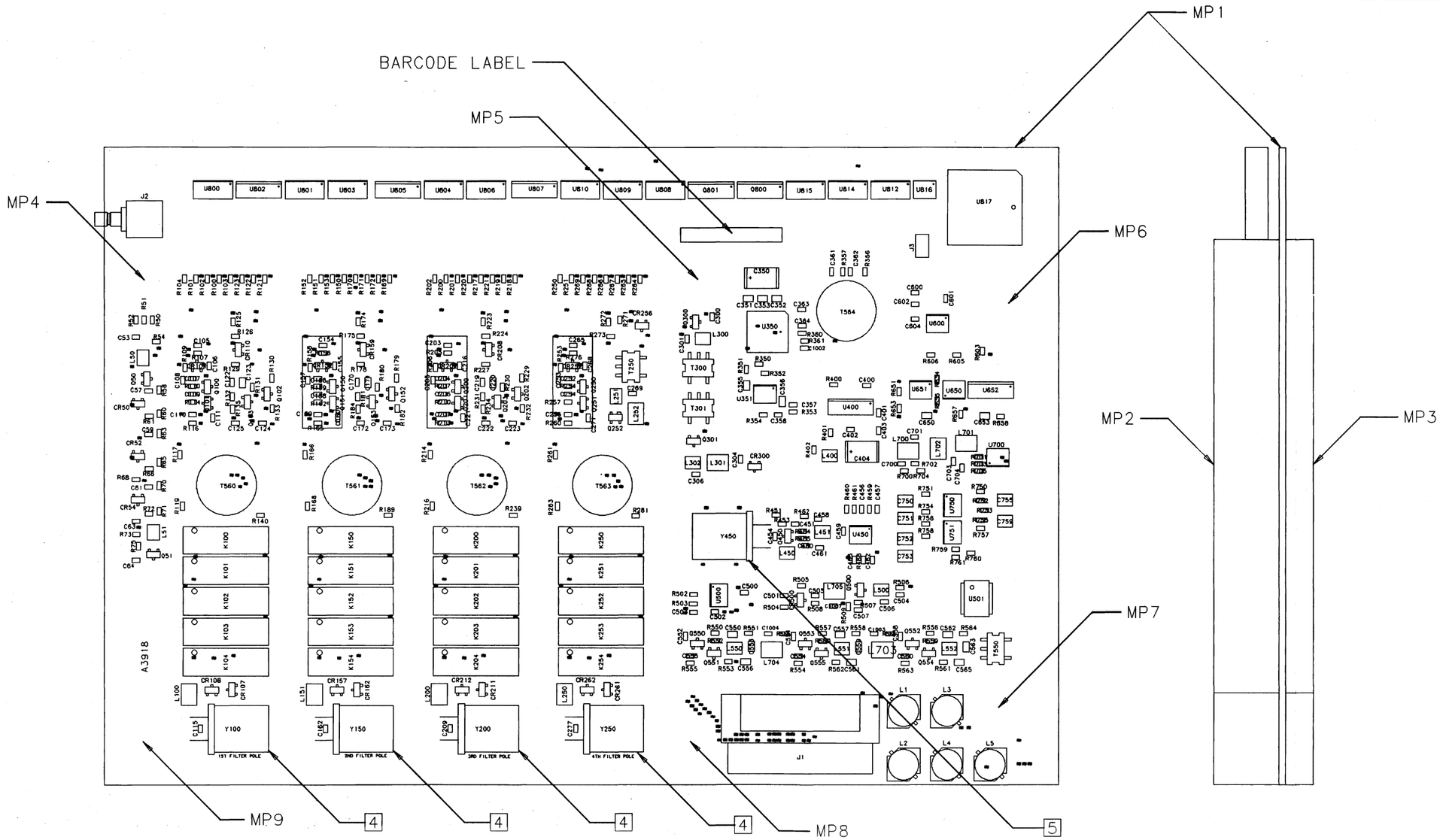

NOTES: UNLESS OTHERWISE SPECIFIED

1. USE RAW BOARD PART NUMBER E4401-20183.
2. SANDWHICH BOARD (MP1) BETWEEN SHIELDS (MP2 & MP3), INSERT SCREWS (MP4-MP9) FROM MP2 THRU THE BOARD INTO MP3. TORQUE SCREWS 9.0 INCH-POUNDS.
3. DO NOT LOAD CROSS HATCHED ▨ COMPONENTS.

[4] Y100, Y150, Y200, Y250, CONTAIN A HANDWRITTEN SERIAL NUMBER AND AND THE LAST DIGIT IS I

[5] Y450 CONTAINS A HANDWRITTEN SERIAL NUMBER AND THE LAST DIGIT IS II

TOP SIDE

FOR MATERIAL LIST SEE E4401-60183

HP PROPRIETARY
THIS DOCUMENT CONTAINS CONFIDENTIAL, PROPRIETARY INFORMATION THAT IS HEWLETT-PACKARD (HP) PROPERTY. DO NOT DISCLOSE TO OR DUPLICATE FOR OTHERS EXCEPT AS AUTHORIZED BY HP.

UNLESS OTHERWISE SPECIFIED, DIMENSIONS ARE IN INCHES.
TOLERANCES: XX.XXX .010, XX.XX .02
THIRD ANGLE PROJECTION
DO NOT SCALE THIS DRAWING

DRAWN BY	DATE	
ENGINEER/CHECKER	DATE	
RELEASE TO PROD.	DATE	
SUPERSEDES DWG.		

TITLE: ASSEMBLY, PWB 21.4 MHZ IF BOARD

MENTOR FILENAME
SCALE NONE
SHEET 1 OF 2
PART NUMBER E4401-60183
D-E4401-60183-2

HEWLETT PACKARD

SYM	REVISIONS	APPROVED	DATE
A	AS ISSUED PCO 53-13630 IS		
B	CHANGED PER ECO 53-15021 /KS		

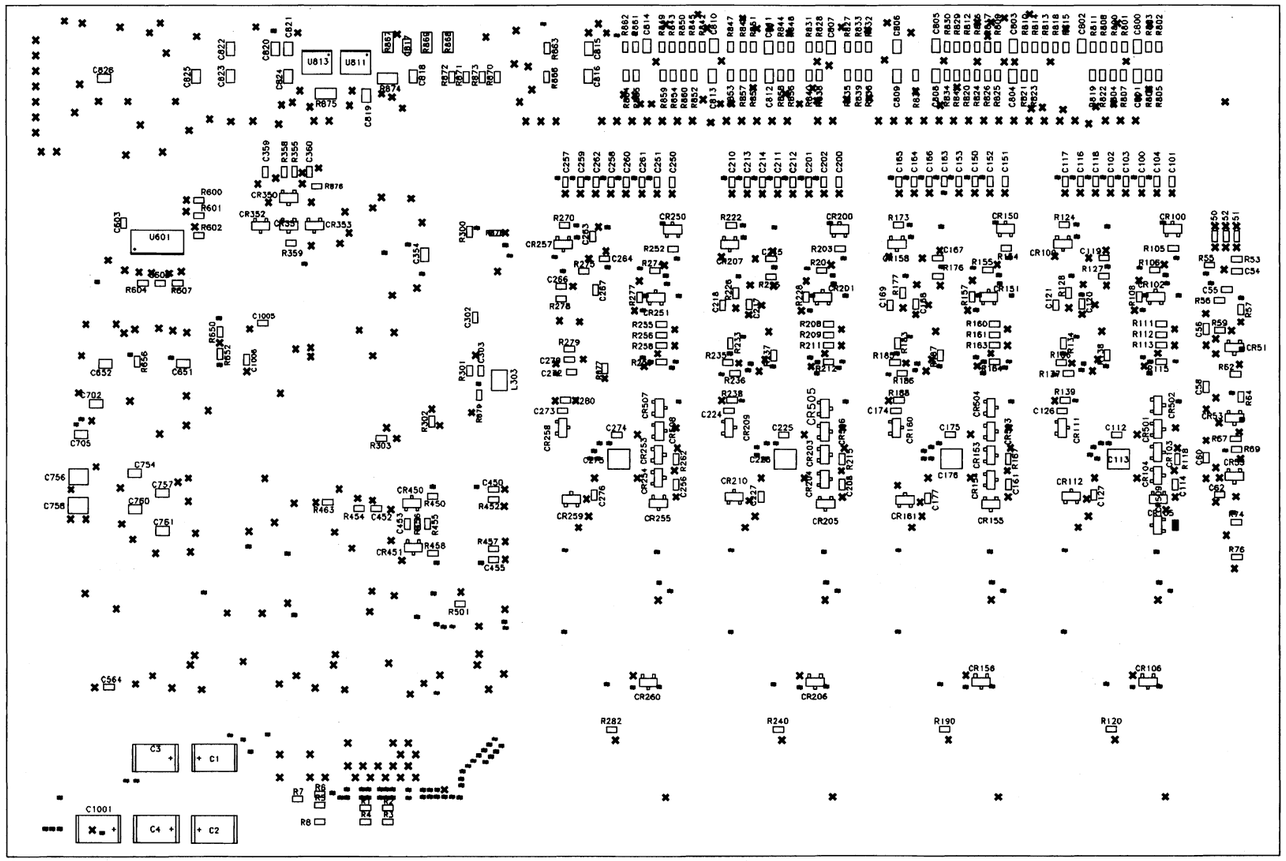

BOTTOM SIDE

HP PROPRIETARY
THIS DOCUMENT CONTAINS CONFIDENTIAL, PROPRIETARY INFORMATION THAT IS HEWLETT-PACKARD (HP) PROPERTY. DO NOT DISCLOSE TO OR DUPLICATE FOR OTHERS EXCEPT AS AUTHORIZED BY HP.

UNLESS OTHERWISE SPECIFIED, DIMENSIONS ARE IN INCHES.
TOLERANCES: XX.XXX .010 XX.XX .02
THIRD ANGLE PROJECTION
DO NOT SCALE THIS DRAWING

DRAWN BY | DATE
ENGINEER/CHECKER | DATE
RELEASE TO PROD. | DATE
SUPERSEDES DWG.

ASSEMBLY, PWB
21.4 MHZ IF BOARD
TITLE

MENTOR FILENAME
SCALE NONE
SHEET 2 OF 2
HEWLETT PACKARD
E4401-60183 PART NUMBER
D-E4401-60183-2

Scans by ArtekMedia => 2009

D-E4401-60183-1

REV	INFORMATION	APPROVED	DATE
A	AS ISSUED PCO 53-13630 IS		
B	CHANGED PER ECO 53-15021 /KS		
C	CHANGED PER PCO 62431 /MBY		

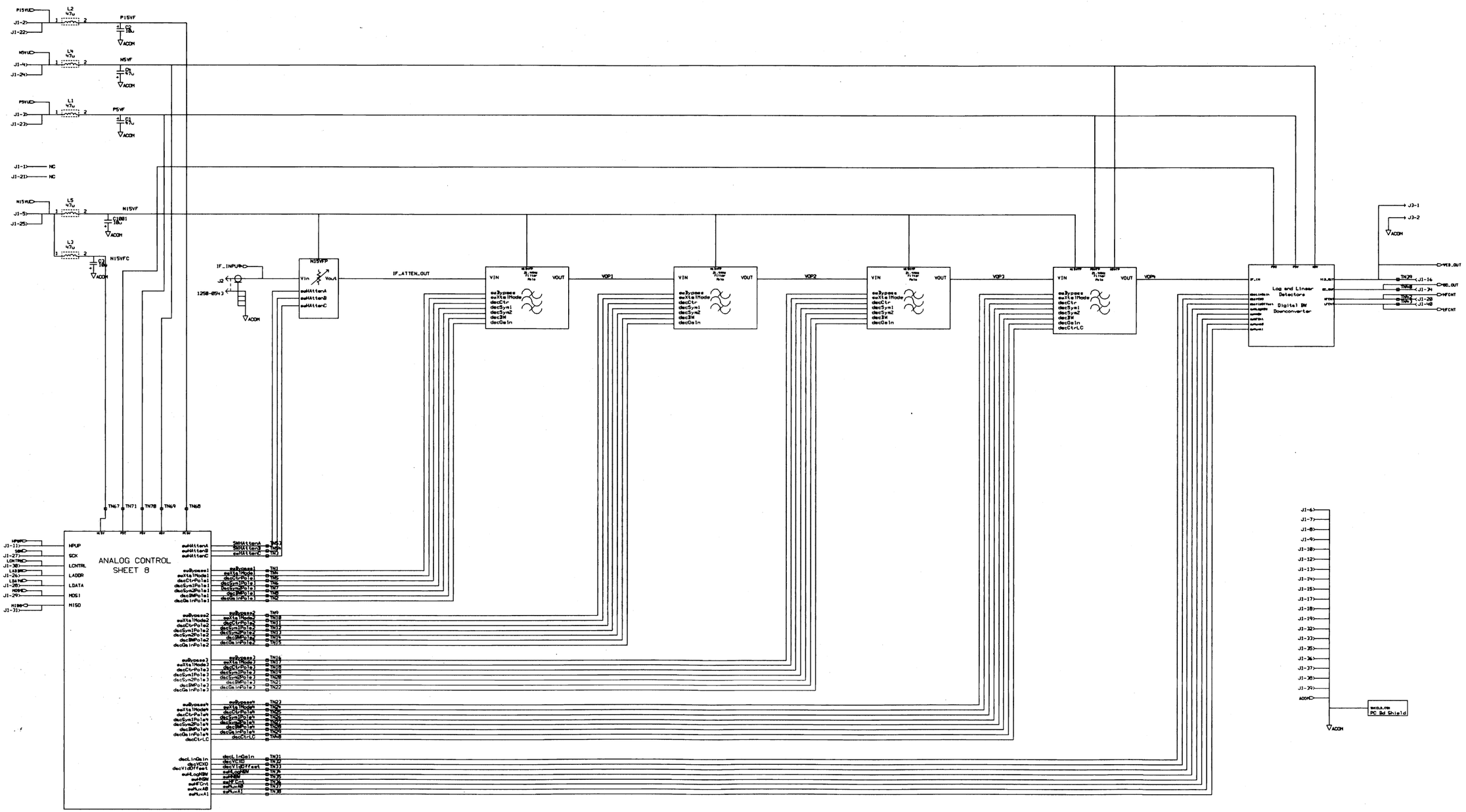

AGILENT TECHNOLOGIES
RESTRICTED
THIS DOCUMENT CONTAINS CONFIDENTIAL. PROPRIETARY INFORMATION THAT IS AGILENT TECHNOLOGIES PROPERTY. DO NOT DISCLOSE TO OR DUPLICATE FOR OTHERS EXCEPT AS AUTHORIZED BY AGILENT TECHNOLOGIES.

LAST CHECKED	DATE	SCHEMATIC, PWA MOSQUITO IF BOARD 21.4MHz FILTERS AND LOG AMP	Agilent
ENGINEER	SHEET 1 OF 1	TITLE	
DRAWN BY	SIZE D	PATHNAME	E4401-60183 PART NUMBER
	CA3918 ASSY. REV	A3918 WRB. REV	1 PAGE OF 10	D-E4401-60183-1 DWG. NO.

REVISIONS
SEE PAGE 1 FOR REVISION HISTORY

IF Input Attenuator

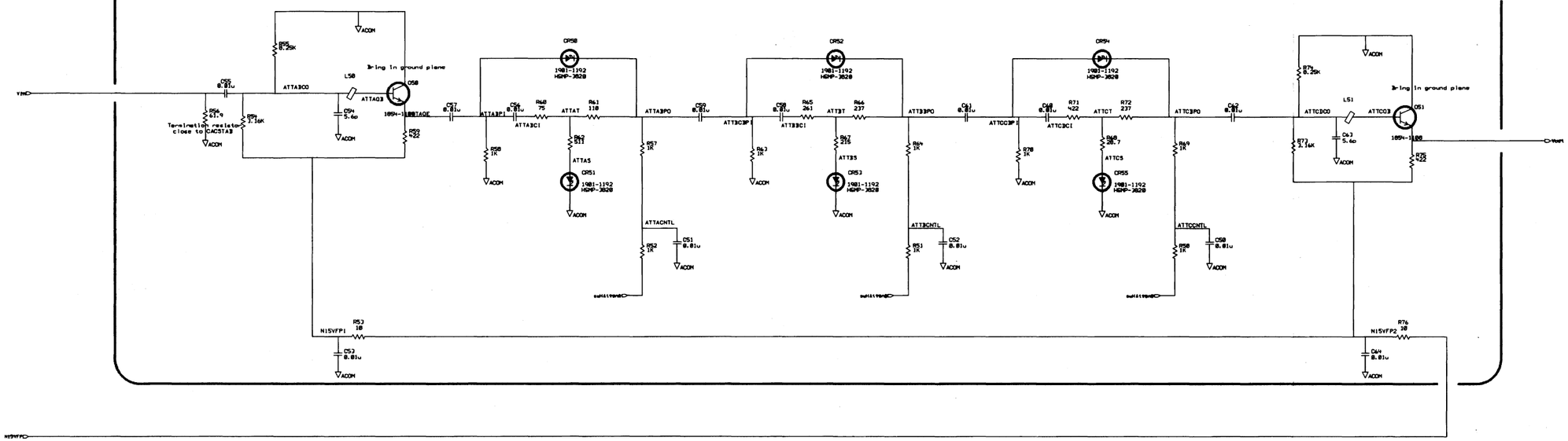

AGILENT TECHNOLOGIES RESTRICTED
THIS DOCUMENT CONTAINS CONFIDENTIAL. PROPRIETARY INFORMATION THAT IS AGILENT TECHNOLOGIES PROPERTY. DO NOT DISCLOSE TO OR DUPLICATE FOR OTHERS EXCEPT AS AUTHORIZED BY AGILENT TECHNOLOGIES.

LAST CHECKED	DATE	SCHEMATIC, PWA MOSQUITO IF BOARD INPUT ATTENTUATOR	Agilent
ENGINEER	SHEET 1 OF 1	TITLE	E4401-60183 PART NUMBER
DRAWN BY	SIZE D	HP_EW01/20103/A3918_2/ifatten sheet1 FATHNAME	
	CA 3918 ASSY. REV	A3918 BRD. REV	PAGE 2 OF 10	D-E4401-60183-1 DWG. NO.

Scans by ArtechMedia => 2009

REVISIONS
SEE PAGE 1 FOR REVISION HISTORY

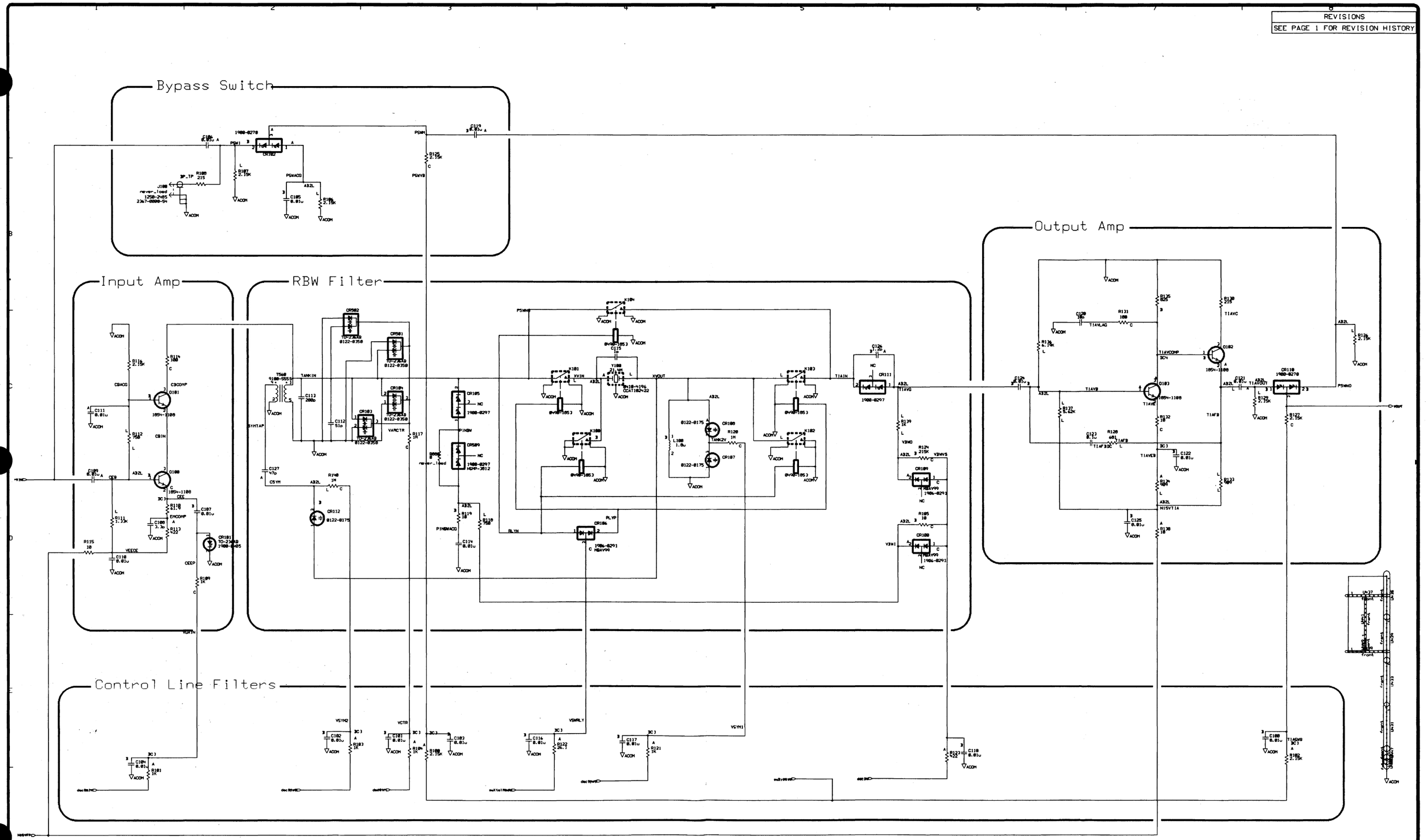

POLE 1

AGILENT TECHNOLOGIES
RESTRICTED
THIS DOCUMENT CONTAINS CONFIDENTIAL, PROPRIETARY INFORMATION THAT IS AGILENT TECHNOLOGIES PROPERTY. DO NOT DISCLOSE TO OR DUPLICATE FOR OTHERS EXCEPT AS AUTHORIZED BY AGILENT TECHNOLOGIES.

LAST CHECKED	DATE	SCHEMATIC, PWA MOSQUITO IF BOARD FIRST FILTER POLE	Agilent
ENGINEER	SHEET 1 OF 1	TITLE	E4401-60183
DRAWN BY	SIZE D	PATHNAME	PART NUMBER
	CA3918 ASSY. REV	A3918 BRD. REV	3 OF 10 PAGE	D-E4401-60183-1 DWG. NO.

REVISIONS
SEE PAGE 1 FOR REVISION HISTORY

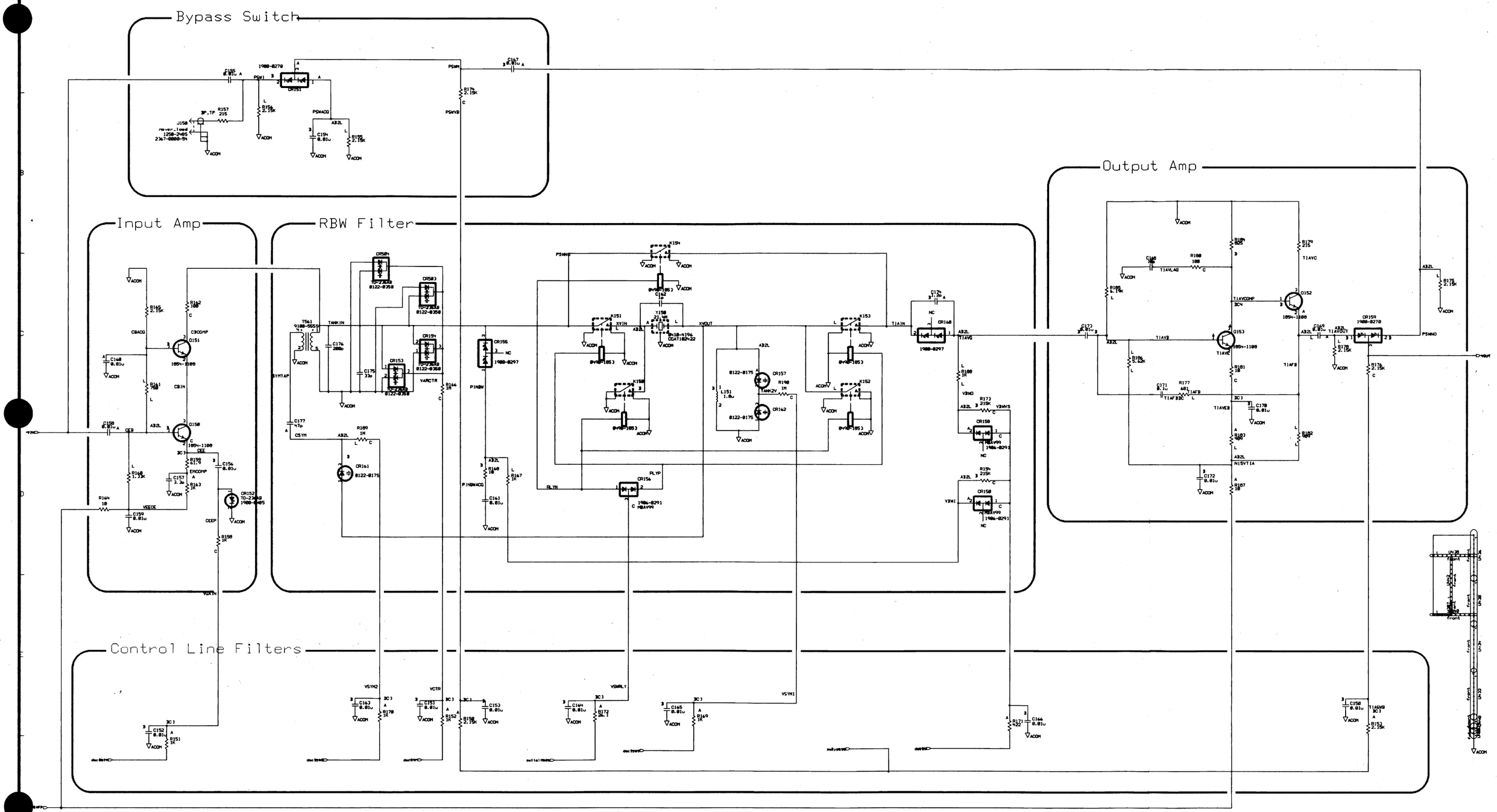

POLE 2

AGILENT TECHNOLOGIES
RESTRICTED
THIS DOCUMENT CONTAINS CONFIDENTIAL. PROPRIETARY INFORMATION THAT IS AGILENT TECHNOLOGIES PROPERTY. DO NOT DISCLOSE TO OR DUPLICATE FOR OTHERS EXCEPT AS AUTHORIZED BY AGILENT TECHNOLOGIES.

LAST CHECKED	DATE	SCHEMATIC, PWA MOSQUITO IF BOARD SECOND FILTER POLE	Agilent
ENGINEER	SHEET 1 OF 1		
DRAWN BY	SIZE D	TITLE 8MP_EN401/20183/A3918_2/pole2 sheet1 PATHNAME	E4401-60183 PART NUMBER
	CA3918 ASSY. REV	A3918 BRD. REV PAGE 4 OF 10	D-E4401-60183-1 DWG. NO.

Scans by ArtekMedia => 2009

REVISIONS
SEE PAGE 1 FOR REVISION HISTORY

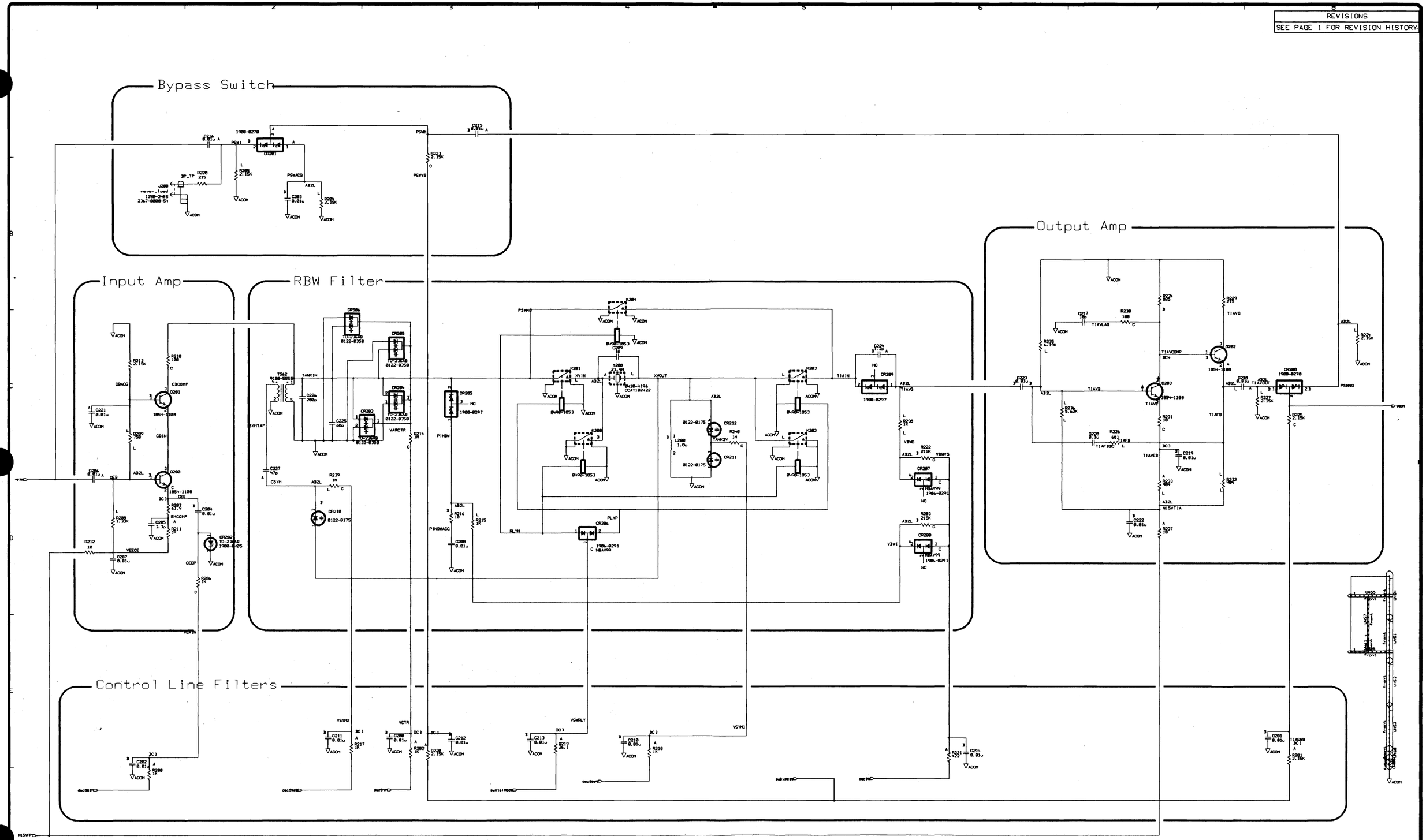

POLE 3

AGILENT TECHNOLOGIES
RESTRICTED
THIS DOCUMENT CONTAINS CONFIDENTIAL, PROPRIETARY INFORMATION THAT IS AGILENT TECHNOLOGIES PROPERTY. DO NOT DISCLOSE TO OR DUPLICATE FOR OTHERS EXCEPT AS AUTHORIZED BY AGILENT TECHNOLOGIES.

LAST CHECKED	DATE	SCHEMATIC, PWA MOSQUITO 1F BOARD THIRD FILTER POLE	Agilent
ENGINEER	SHEET 1 OF 1	TITLE	E4401-60183 PART NUMBER
DRAWN BY	SIZE D	PATHNAME	
	CA3918 ASSY. REV	A3918 BRD. REV	5 10 PAGE OF	D-E4401-60183-1 DWG. NO.

REVISIONS
SEE PAGE 1 FOR REVISION HISTORY

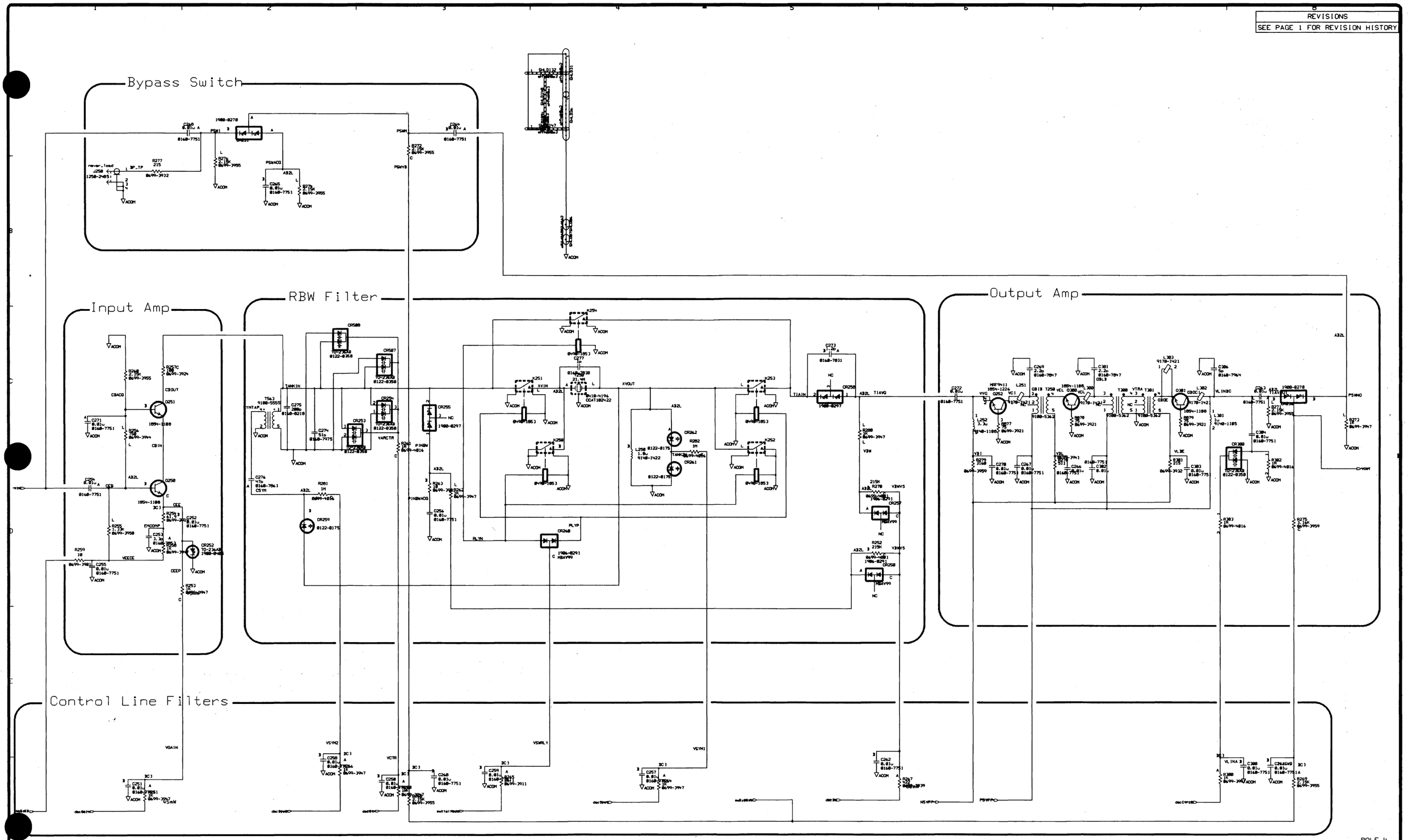

POLE 4

AGILENT TECHNOLOGIES
RESTRICTED
THIS DOCUMENT CONTAINS CONFIDENTIAL. PROPRIETARY INFORMATION THAT IS AGILENT TECHNOLOGIES PROPERTY. DO NOT DISCLOSE TO OR DUPLICATE FOR OTHERS EXCEPT AS AUTHORIZED BY AGILENT TECHNOLOGIES.

LAST CHECKED	DATE	SCHEMATIC, PWA MOSQUITO IF BOARD FOURTH FILTER POLE	Agilent
ENGINEER	SHEET 1 OF 1	TITLE	E4401-60183 PART NUMBER
DRAWN BY	SIZE D	6MP_EVM81/20183/A3918.2/colgN sheet1 PATHNAME	
	CA3918 ASSY. REV	A3918 BRD. REV	PAGE 6 OF 10	D-E4401-60183-1 DWG. NO.

Scans by ArtTinMedia ™ 2000

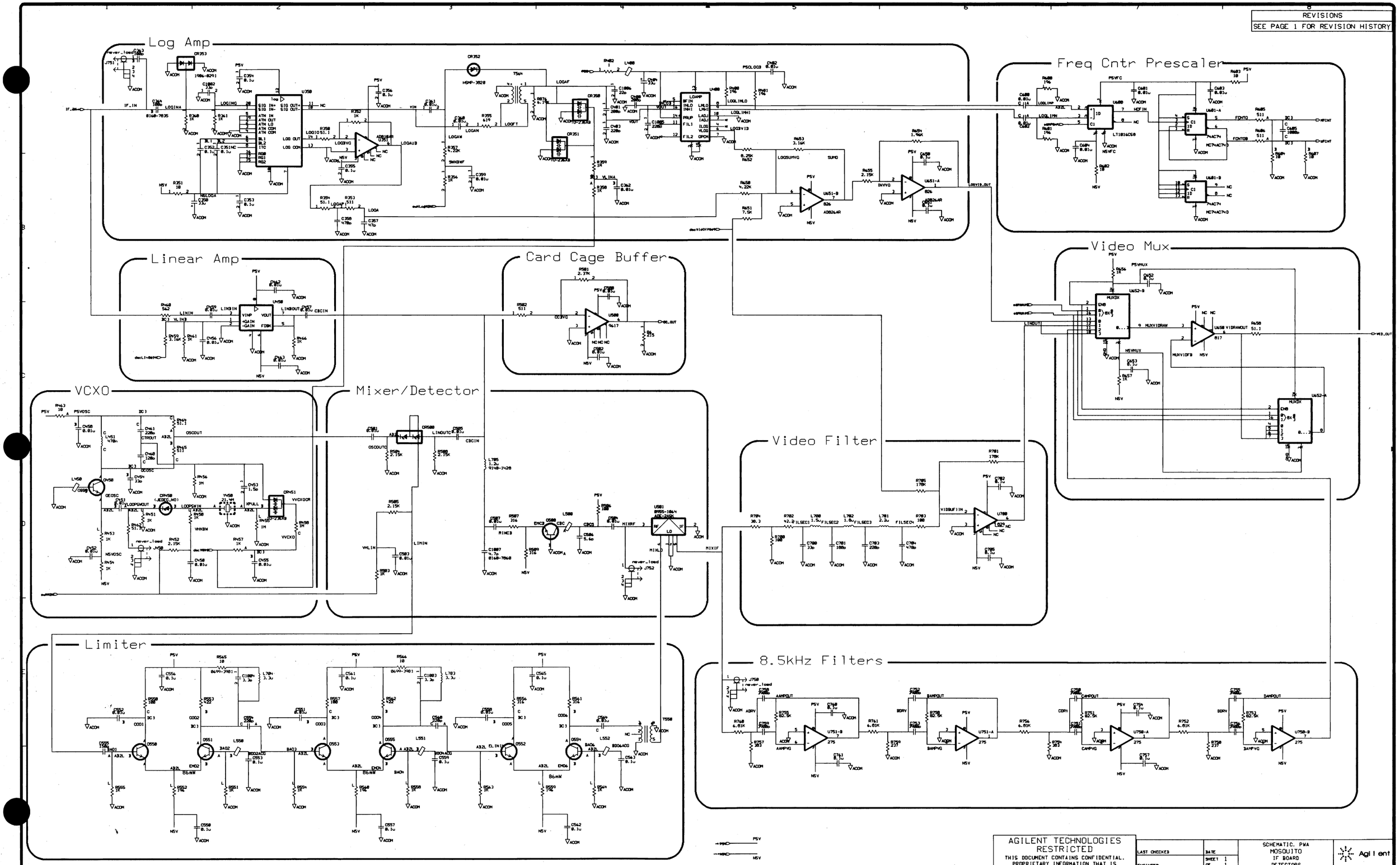

REVISIONS
SEE PAGE 1 FOR REVISION HISTORY

AGILENT TECHNOLOGIES
RESTRICTED
THIS DOCUMENT CONTAINS CONFIDENTIAL, PROPRIETARY INFORMATION THAT IS AGILENT TECHNOLOGIES PROPERTY. DO NOT DISCLOSE TO OR DUPLICATE FOR OTHERS EXCEPT AS AUTHORIZED BY AGILENT TECHNOLOGIES.

LAST CHECKED	DATE	SCHEMATIC, PWA MOSQUITO IF BOARD DETECTORS	Agilent
ENGINEER	SHEET 1 OF 1	TITLE	E4401-60183 PART NUMBER
DRAWN BY	SIZE D	PATHNAME: BWP_E4401/20103/A3918_2/linear sheet1	
	ASSY. REV CA3918	PRB. REV A3918	PAGE 7 OF 10	DWG. NO. D-E4401-60183-1

REVISIONS
SEE PAGE 1 FOR REVISION HISTORY

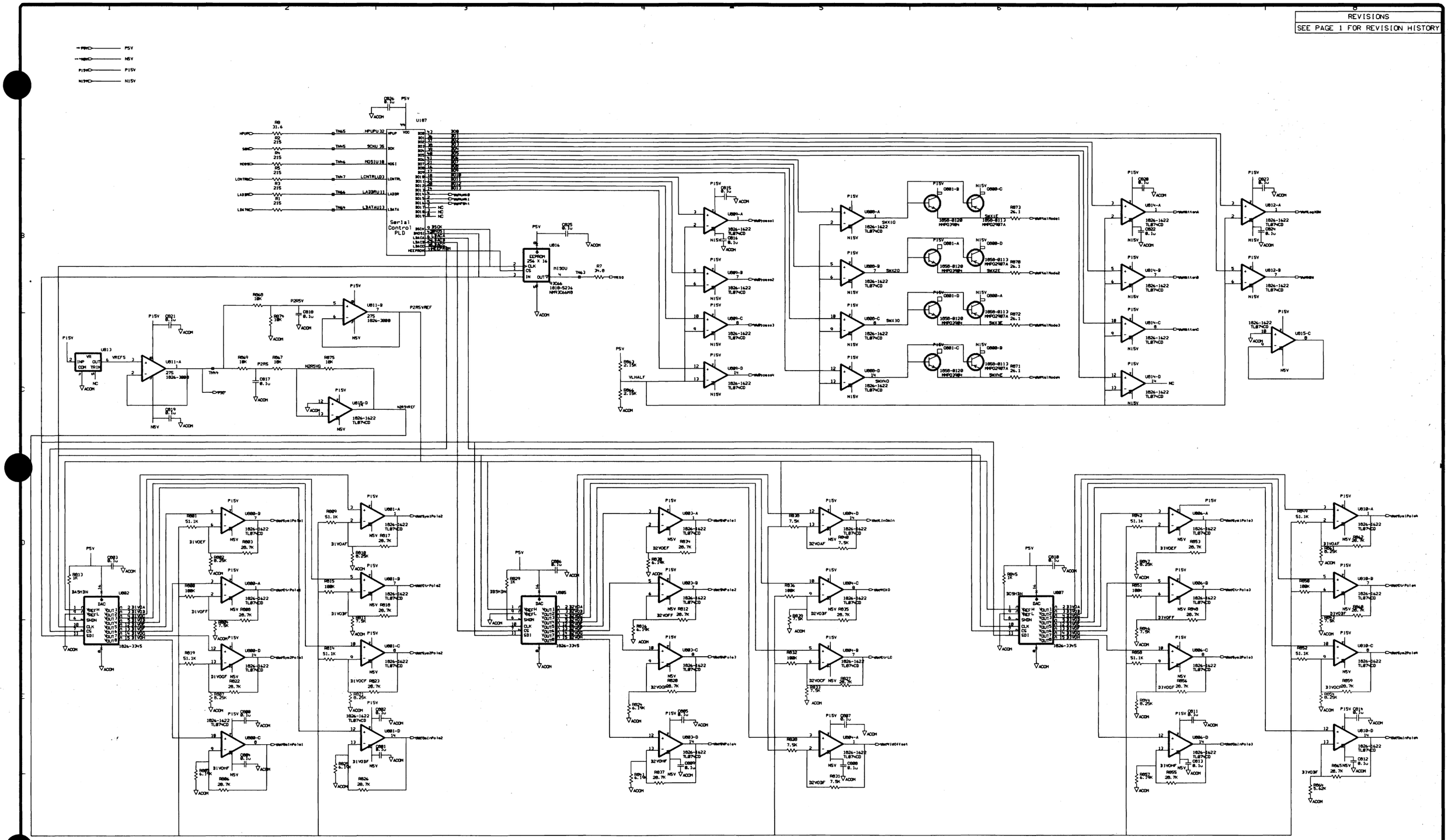

AGILENT TECHNOLOGIES
RESTRICTED
THIS DOCUMENT CONTAINS CONFIDENTIAL, PROPRIETARY INFORMATION THAT IS AGILENT TECHNOLOGIES PROPERTY. DO NOT DISCLOSE TO OR DUPLICATE FOR OTHERS EXCEPT AS AUTHORIZED BY AGILENT TECHNOLOGIES.

LAST CHECKED	DATE	SCHEMATIC: PWA MOSQUITO IF BOARD ANALOG CONTROL	Agilent
ENGINEER	SHEET 1 OF 1	TITLE	
DRAWN BY	SIZE D	WP_E4401/20103/A3918_2/ifcontrol sheet3 PATHNAME	E4401-60183 PART NUMBER
	CA3918 ASST. REV	A3918 BRD. REV	PAGE 8 OF 10	D-E4401-60183-1 DWG. NO.

Scans by ArtekMedia => 2009

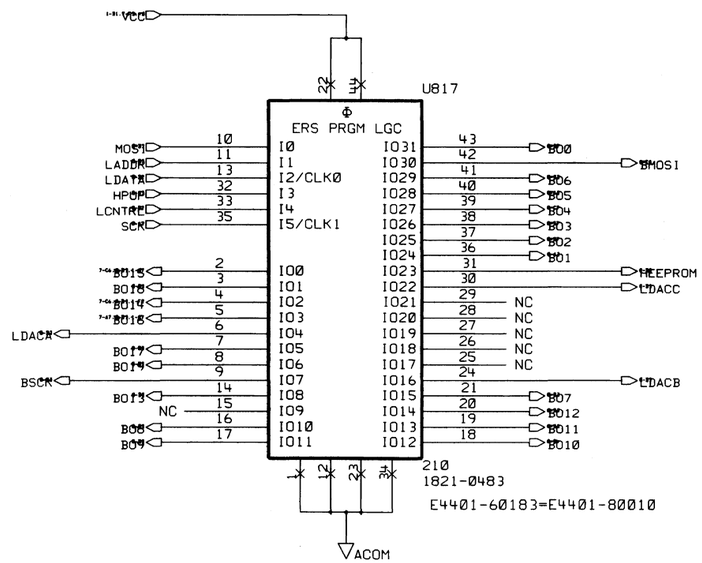

AGILENT TECHNOLOGIES
RESTRICTED
THIS DOCUMENT CONTAINS CONFIDENTIAL, PROPRIETARY INFORMATION THAT IS AGILENT TECHNOLOGIES PROPERTY. DO NOT DISCLOSE TO OR DUPLICATE FOR OTHERS EXCEPT AS AUTHORIZED BY AGILENT TECHNOLOGIES.

LAST CHECKED	DATE	SCHEMATIC, PWA MOSQUITO IF BOARD SERIAL CONTROL	Agilent
ENGINEER	SHEET 1 OF 1	TITLE	
DRAWN BY	SIZE B	$HP_E4401/20183/A3918_2/serialpld sheet1 PATHNAME	E4401-60183 PART NUMBER
	CA3918 ASSY. REV	A3918 BRD. REV	9 OF 10 PAGE	B-E4401-60183-1 DWG. NO.

Component-Level Information Packet for E4401-60059

Processor

Agilent Technologies

Agilent Part Number: E4401-90122
Printed in Malaysia April 2001

Scans by ArtekMedia => 2009

Notice

The information contained in this document is subject to change without notice. Agilent Technologies makes no warranty of any kind with regard to this material, including but not limited to, the implied warranties of merchantability and fitness for a particular purpose. Agilent Technologies shall not be liable for errors contained herein or for incidental or consequential damages in connection with the furnishing, performance, or use of this material.

© Copyright Agilent Technologies Inc. 2000, 2001
All Rights Reserved. Reproduction, adaptation, or translation without prior written permission is prohibited, except as allowed under the copyright laws.

Agilent Part Number E4401-60059
Processor

Reference Designator	Agilent Part Number	Qty	Description	Mgr Code	Mfr Part Number
C1	0160-7798	1	CAP-FXD 0.1uF +-10% 50 V CER X7R	06352	C2012X7R1H104K
C2	0160-7798	1	CAP-FXD 0.1uF +-10% 50 V CER X7R	06352	C2012X7R1H104K
C3	0160-7798	1	CAP-FXD 0.1uF +-10% 50 V CER X7R	06352	C2012X7R1H104K
C4	0160-7798	1	CAP-FXD 0.1uF +-10% 50 V CER X7R	06352	C2012X7R1H104K
C5	0160-7798	1	CAP-FXD 0.1uF +-10% 50 V CER X7R	06352	C2012X7R1H104K
C6	0160-7798	1	CAP-FXD 0.1uF +-10% 50 V CER X7R	06352	C2012X7R1H104K
C7	0160-7798	1	CAP-FXD 0.1uF +-10% 50 V CER X7R	06352	C2012X7R1H104K
C8	0160-7798	1	CAP-FXD 0.1uF +-10% 50 V CER X7R	06352	C2012X7R1H104K
C9	0160-7798	1	CAP-FXD 0.1uF +-10% 50 V CER X7R	06352	C2012X7R1H104K
C10	0160-7798	1	CAP-FXD 0.1uF +-10% 50 V CER X7R	06352	C2012X7R1H104K
C11	0160-7798	1	CAP-FXD 0.1uF +-10% 50 V CER X7R	06352	C2012X7R1H104K
C12	0160-7798	1	CAP-FXD 0.1uF +-10% 50 V CER X7R	06352	C2012X7R1H104K
C13	0160-7798	1	CAP-FXD 0.1uF +-10% 50 V CER X7R	06352	C2012X7R1H104K
C14	0160-7798	1	CAP-FXD 0.1uF +-10% 50 V CER X7R	06352	C2012X7R1H104K
C15	0160-7798	1	CAP-FXD 0.1uF +-10% 50 V CER X7R	06352	C2012X7R1H104K
C16	0180-4116	1	CAP-FXD 22uF +-20% 20 V TA	02010	TAJD226M020
C17	0160-7798	1	CAP-FXD 0.1uF +-10% 50 V CER X7R	06352	C2012X7R1H104K
C18	0180-4287	1	CAP-FXD 10uF +-20% 35 V TA	02010	TAJD106M035
C19	0160-7798	1	CAP-FXD 0.1uF +-10% 50 V CER X7R	06352	C2012X7R1H104K
C20	0160-7798	1	CAP-FXD 0.1uF +-10% 50 V CER X7R	06352	C2012X7R1H104K
C21	0180-4287	1	CAP-FXD 10uF +-20% 35 V TA	02010	TAJD106M035
C22	0160-7798	1	CAP-FXD 0.1uF +-10% 50 V CER X7R	06352	C2012X7R1H104K
C23	0160-7798	1	CAP-FXD 0.1uF +-10% 50 V CER X7R	06352	C2012X7R1H104K
C24	0160-7798	1	CAP-FXD 0.1uF +-10% 50 V CER X7R	06352	C2012X7R1H104K
C25	0180-4287	1	CAP-FXD 10uF +-20% 35 V TA	02010	TAJD106M035
C26	0160-7798	1	CAP-FXD 0.1uF +-10% 50 V CER X7R	06352	C2012X7R1H104K
C27	0160-7748	1	CAP-FXD 1000pF +-10% 50 V CER X7R	02010	06035C102KAT
C28	0160-7748	1	CAP-FXD 1000pF +-10% 50 V CER X7R	02010	06035C102KAT

Scans by ArtekMedia => 2009

Agilent Part Number E4401-60059
Processor

Reference Designator	Agilent Part Number	Qty	Description	Mgr Code	Mfr Part Number
C29	0160-7798	1	CAP-FXD 0.1uF +-10% 50 V CER X7R	06352	C2012X7R1H104K
C30	0180-4116	1	CAP-FXD 22uF +-20% 20 V TA	02010	TAJD226M020
C31	0160-7798	1	CAP-FXD 0.1uF +-10% 50 V CER X7R	06352	C2012X7R1H104K
C32	0160-7798	1	CAP-FXD 0.1uF +-10% 50 V CER X7R	06352	C2012X7R1H104K
C33	0160-7748	1	CAP-FXD 1000pF +-10% 50 V CER X7R	02010	06035C102KAT
C34	0160-7751	1	CAP-FXD 0.01uF +-10% 50 V CER X7R	02010	06035C103KAT
C35	0160-6982	1	CAP-FXD 0.033uF +-10% 50 V CER X7R	02010	08055C333KAT_A
C36	0160-7511	1	CAP-FXD 270pF +-5% 50 V CER C0G	06352	C1608COG1H271J
C37	0160-7798	1	CAP-FXD 0.1uF +-10% 50 V CER X7R	06352	C2012X7R1H104K
C38	0160-7699	1	CAP-FXD 3300pF +-10% 50 V CER X7R	02010	06035C332KAT
C39	0160-7973	1	CAP-FXD 30pF +-5% 50 V CER C0G	02010	06035A300JAT
C40	0160-7798	1	CAP-FXD 0.1uF +-10% 50 V CER X7R	06352	C2012X7R1H104K
C41	0160-7798	1	CAP-FXD 0.1uF +-10% 50 V CER X7R	06352	C2012X7R1H104K
C42	0160-7798	1	CAP-FXD 0.1uF +-10% 50 V CER X7R	06352	C2012X7R1H104K
C43	0160-7798	1	CAP-FXD 0.1uF +-10% 50 V CER X7R	06352	C2012X7R1H104K
C44	0160-7798	1	CAP-FXD 0.1uF +-10% 50 V CER X7R	06352	C2012X7R1H104K
C45	0160-7973	1	CAP-FXD 30pF +-5% 50 V CER C0G	02010	06035A300JAT
C46	0160-7798	1	CAP-FXD 0.1uF +-10% 50 V CER X7R	06352	C2012X7R1H104K
C47	0160-7798	1	CAP-FXD 0.1uF +-10% 50 V CER X7R	06352	C2012X7R1H104K
C48	0160-7798	1	CAP-FXD 0.1uF +-10% 50 V CER X7R	06352	C2012X7R1H104K
C49	0160-7798	1	CAP-FXD 0.1uF +-10% 50 V CER X7R	06352	C2012X7R1H104K
C50	0160-7798	1	CAP-FXD 0.1uF +-10% 50 V CER X7R	06352	C2012X7R1H104K
C51	0160-7798	1	CAP-FXD 0.1uF +-10% 50 V CER X7R	06352	C2012X7R1H104K
C52	0160-7798	1	CAP-FXD 0.1uF +-10% 50 V CER X7R	06352	C2012X7R1H104K
C53	0160-7973	1	CAP-FXD 30pF +-5% 50 V CER C0G	02010	06035A300JAT
C54	0160-7798	1	CAP-FXD 0.1uF +-10% 50 V CER X7R	06352	C2012X7R1H104K
C55	0160-7798	1	CAP-FXD 0.1uF +-10% 50 V CER X7R	06352	C2012X7R1H104K
C56	0160-7798	1	CAP-FXD 0.1uF +-10% 50 V CER X7R	06352	C2012X7R1H104K
C57	0160-7798	1	CAP-FXD 0.1uF +-10% 50 V CER X7R	06352	C2012X7R1H104K
C58	0160-7798	1	CAP-FXD 0.1uF +-10% 50 V CER X7R	06352	C2012X7R1H104K

 **Indicates factory-selected value*

Agilent Part Number E4401-60059
Processor

Reference Designator	Agilent Part Number	Qty	Description	Mgr Code	Mfr Part Number
C59	0160-7798	1	CAP-FXD 0.1uF +-10% 50 V CER X7R	06352	C2012X7R1H104K
C60	0160-7798	1	CAP-FXD 0.1uF +-10% 50 V CER X7R	06352	C2012X7R1H104K
C61	0160-7798	1	CAP-FXD 0.1uF +-10% 50 V CER X7R	06352	C2012X7R1H104K
C62	0160-7835	1	CAP-FXD 100pF +-5% 50 V CER C0G	02010	06035A101JAT
C63	0160-7798	1	CAP-FXD 0.1uF +-10% 50 V CER X7R	06352	C2012X7R1H104K
C64	0160-7849	1	CAP-FXD 220pF +-5% 50 V CER C0G	02010	06035A221JAT
C65	0180-4287	1	CAP-FXD 10uF +-20% 35 V TA	02010	TAJD106M035
C66	0180-4287	1	CAP-FXD 10uF +-20% 35 V TA	02010	TAJD106M035
C67	0160-7798	1	CAP-FXD 0.1uF +-10% 50 V CER X7R	06352	C2012X7R1H104K
C68	0160-7798	1	CAP-FXD 0.1uF +-10% 50 V CER X7R	06352	C2012X7R1H104K
C69	0160-7798	1	CAP-FXD 0.1uF +-10% 50 V CER X7R	06352	C2012X7R1H104K
C70	0160-7798	1	CAP-FXD 0.1uF +-10% 50 V CER X7R	06352	C2012X7R1H104K
C71	0160-7798	1	CAP-FXD 0.1uF +-10% 50 V CER X7R	06352	C2012X7R1H104K
C72	0160-6717	1	CAP-FXD 1800pF +-2.5% 100 V POLYP-FL	06127	FKP2/1800PF/2.5%/ 100VDC
C73	0160-7751	1	CAP-FXD 0.01uF +-10% 50 V CER X7R	02010	06035C103KAT
C74	0180-4287	1	CAP-FXD 10uF +-20% 35 V TA	02010	TAJD106M035
C75	0180-4287	1	CAP-FXD 10uF +-20% 35 V TA	02010	TAJD106M035
C76	0160-7798	1	CAP-FXD 0.1uF +-10% 50 V CER X7R	06352	C2012X7R1H104K
C77	0160-7751	1	CAP-FXD 0.01uF +-10% 50 V CER X7R	02010	06035C103KAT
C78	0160-7798	1	CAP-FXD 0.1uF +-10% 50 V CER X7R	06352	C2012X7R1H104K
C79	0160-7751	1	CAP-FXD 0.01uF +-10% 50 V CER X7R	02010	06035C103KAT
C80	0160-7798	1	CAP-FXD 0.1uF +-10% 50 V CER X7R	06352	C2012X7R1H104K
C81	0160-7798	1	CAP-FXD 0.1uF +-10% 50 V CER X7R	06352	C2012X7R1H104K
C82	0160-7974	1	CAP-FXD 43pF +-5% 50 V CER C0G	06352	C1608COG1H430J
C83	0160-7798	1	CAP-FXD 0.1uF +-10% 50 V CER X7R	06352	C2012X7R1H104K
C84	0160-7798	1	CAP-FXD 0.1uF +-10% 50 V CER X7R	06352	C2012X7R1H104K
C85	0160-7798	1	CAP-FXD 0.1uF +-10% 50 V CER X7R	06352	C2012X7R1H104K
C86	0160-7798	1	CAP-FXD 0.1uF +-10% 50 V CER X7R	06352	C2012X7R1H104K
C87	0160-7798	1	CAP-FXD 0.1uF +-10% 50 V CER X7R	06352	C2012X7R1H104K

**Indicates factory-selected value*

Scans by ArtekMedia => 2009

Agilent Part Number E4401-60059
Processor

Reference Designator	Agilent Part Number	Qty	Description	Mgr Code	Mfr Part Number
C88	0160-7798	1	CAP-FXD 0.1uF +-10% 50 V CER X7R	06352	C2012X7R1H104K
C89	0160-7798	1	CAP-FXD 0.1uF +-10% 50 V CER X7R	06352	C2012X7R1H104K
C90	0160-7798	1	CAP-FXD 0.1uF +-10% 50 V CER X7R	06352	C2012X7R1H104K
C91	0160-7798	1	CAP-FXD 0.1uF +-10% 50 V CER X7R	06352	C2012X7R1H104K
C92	0160-7798	1	CAP-FXD 0.1uF +-10% 50 V CER X7R	06352	C2012X7R1H104K
C93	0160-7798	1	CAP-FXD 0.1uF +-10% 50 V CER X7R	06352	C2012X7R1H104K
C94	0160-7798	1	CAP-FXD 0.1uF +-10% 50 V CER X7R	06352	C2012X7R1H104K
C95	0160-7798	1	CAP-FXD 0.1uF +-10% 50 V CER X7R	06352	C2012X7R1H104K
C96	0160-7798	1	CAP-FXD 0.1uF +-10% 50 V CER X7R	06352	C2012X7R1H104K
C97	0160-7798	1	CAP-FXD 0.1uF +-10% 50 V CER X7R	06352	C2012X7R1H104K
C98	0160-7798	1	CAP-FXD 0.1uF +-10% 50 V CER X7R	06352	C2012X7R1H104K
C99	0160-7798	1	CAP-FXD 0.1uF +-10% 50 V CER X7R	06352	C2012X7R1H104K
C100	0160-7798	1	CAP-FXD 0.1uF +-10% 50 V CER X7R	06352	C2012X7R1H104K
C101	0160-7798	1	CAP-FXD 0.1uF +-10% 50 V CER X7R	06352	C2012X7R1H104K
C102	0160-7798	1	CAP-FXD 0.1uF +-10% 50 V CER X7R	06352	C2012X7R1H104K
C103	0160-7798	1	CAP-FXD 0.1uF +-10% 50 V CER X7R	06352	C2012X7R1H104K
C105	0180-4287	1	CAP-FXD 10uF +-20% 35 V TA	02010	TAJD106M035
C106	0160-7798	1	CAP-FXD 0.1uF +-10% 50 V CER X7R	06352	C2012X7R1H104K
C107	0160-7751	1	CAP-FXD 0.01uF +-10% 50 V CER X7R	02010	06035C103KAT
C108	0160-7986	1	CAP-FXD 390pF +-5% 50 V CER C0G	06352	C1608COG1H391J
C109	0160-7798	1	CAP-FXD 0.1uF +-10% 50 V CER X7R	06352	C2012X7R1H104K
C110	0160-7798	1	CAP-FXD 0.1uF +-10% 50 V CER X7R	06352	C2012X7R1H104K
C111	0180-4287	1	CAP-FXD 10uF +-20% 35 V TA	02010	TAJD106M035
C112	0160-7798	1	CAP-FXD 0.1uF +-10% 50 V CER X7R	06352	C2012X7R1H104K
C113	0160-7798	1	CAP-FXD 0.1uF +-10% 50 V CER X7R	06352	C2012X7R1H104K
C114	0160-7798	1	CAP-FXD 0.1uF +-10% 50 V CER X7R	06352	C2012X7R1H104K
C116	0160-7798	1	CAP-FXD 0.1uF +-10% 50 V CER X7R	06352	C2012X7R1H104K
C117	0160-7798	1	CAP-FXD 0.1uF +-10% 50 V CER X7R	06352	C2012X7R1H104K
C118	0160-7798	1	CAP-FXD 0.1uF +-10% 50 V CER X7R	06352	C2012X7R1H104K
C119	0160-7798	1	CAP-FXD 0.1uF +-10% 50 V CER X7R	06352	C2012X7R1H104K

 **Indicates factory-selected value*

Agilent Part Number E4401-60059
Processor

Reference Designator	Agilent Part Number	Qty	Description	Mgr Code	Mfr Part Number
C120	0160-7798	1	CAP-FXD 0.1uF +-10% 50 V CER X7R	06352	C2012X7R1H104K
C121	0160-7798	1	CAP-FXD 0.1uF +-10% 50 V CER X7R	06352	C2012X7R1H104K
C122	0160-7798	1	CAP-FXD 0.1uF +-10% 50 V CER X7R	06352	C2012X7R1H104K
C123	0160-7798	1	CAP-FXD 0.1uF +-10% 50 V CER X7R	06352	C2012X7R1H104K
C124	0160-7798	1	CAP-FXD 0.1uF +-10% 50 V CER X7R	06352	C2012X7R1H104K
C125	0160-7798	1	CAP-FXD 0.1uF +-10% 50 V CER X7R	06352	C2012X7R1H104K
C126	0180-4287	1	CAP-FXD 10uF +-20% 35 V TA	02010	TAJD106M035
C127	0160-7798	1	CAP-FXD 0.1uF +-10% 50 V CER X7R	06352	C2012X7R1H104K
C128	0160-7798	1	CAP-FXD 0.1uF +-10% 50 V CER X7R	06352	C2012X7R1H104K
C129	0160-7798	1	CAP-FXD 0.1uF +-10% 50 V CER X7R	06352	C2012X7R1H104K
C130	0160-7798	1	CAP-FXD 0.1uF +-10% 50 V CER X7R	06352	C2012X7R1H104K
C131	0160-7798	1	CAP-FXD 0.1uF +-10% 50 V CER X7R	06352	C2012X7R1H104K
C132	0180-4287	1	CAP-FXD 10uF +-20% 35 V TA	02010	TAJD106M035
C133	0160-7798	1	CAP-FXD 0.1uF +-10% 50 V CER X7R	06352	C2012X7R1H104K
C134	0160-7798	1	CAP-FXD 0.1uF +-10% 50 V CER X7R	06352	C2012X7R1H104K
C135	0180-4287	1	CAP-FXD 10uF +-20% 35 V TA	02010	TAJD106M035
C136	0160-7798	1	CAP-FXD 0.1uF +-10% 50 V CER X7R	06352	C2012X7R1H104K
C137	0160-7798	1	CAP-FXD 0.1uF +-10% 50 V CER X7R	06352	C2012X7R1H104K
C138	0180-4287	1	CAP-FXD 10uF +-20% 35 V TA	02010	TAJD106M035
C139	0160-7798	1	CAP-FXD 0.1uF +-10% 50 V CER X7R	06352	C2012X7R1H104K
C140	0160-7798	1	CAP-FXD 0.1uF +-10% 50 V CER X7R	06352	C2012X7R1H104K
C141	0160-7798	1	CAP-FXD 0.1uF +-10% 50 V CER X7R	06352	C2012X7R1H104K
C142	0160-7798	1	CAP-FXD 0.1uF +-10% 50 V CER X7R	06352	C2012X7R1H104K
C143	0160-7798	1	CAP-FXD 0.1uF +-10% 50 V CER X7R	06352	C2012X7R1H104K
C144	0160-7798	1	CAP-FXD 0.1uF +-10% 50 V CER X7R	06352	C2012X7R1H104K
C145	0160-7798	1	CAP-FXD 0.1uF +-10% 50 V CER X7R	06352	C2012X7R1H104K
C146	0160-7798	1	CAP-FXD 0.1uF +-10% 50 V CER X7R	06352	C2012X7R1H104K
C147	0160-7798	1	CAP-FXD 0.1uF +-10% 50 V CER X7R	06352	C2012X7R1H104K
C148	0160-7798	1	CAP-FXD 0.1uF +-10% 50 V CER X7R	06352	C2012X7R1H104K
C149	0180-4287	1	CAP-FXD 10uF +-20% 35 V TA	02010	TAJD106M035

Scans by ArtekMedia => 2009

Agilent Part Number E4401-60059
Processor

Reference Designator	Agilent Part Number	Qty	Description	Mgr Code	Mfr Part Number
C150	0160-7798	1	CAP-FXD 0.1uF +-10% 50 V CER X7R	06352	C2012X7R1H104K
C151	0160-7798	1	CAP-FXD 0.1uF +-10% 50 V CER X7R	06352	C2012X7R1H104K
C152	0160-7798	1	CAP-FXD 0.1uF +-10% 50 V CER X7R	06352	C2012X7R1H104K
C153	0160-7798	1	CAP-FXD 0.1uF +-10% 50 V CER X7R	06352	C2012X7R1H104K
C154	0160-7798	1	CAP-FXD 0.1uF +-10% 50 V CER X7R	06352	C2012X7R1H104K
C155	0180-4287	1	CAP-FXD 10uF +-20% 35 V TA	02010	TAJD106M035
C156	0180-4287	1	CAP-FXD 10uF +-20% 35 V TA	02010	TAJD106M035
C157	0160-7798	1	CAP-FXD 0.1uF +-10% 50 V CER X7R	06352	C2012X7R1H104K
C158	0180-3975	1	CAP-FXD 2.2uF +-20% 20 V TA	02010	TAJB225M020
C159	0160-7798	1	CAP-FXD 0.1uF +-10% 50 V CER X7R	06352	C2012X7R1H104K
C160	0160-7798	1	CAP-FXD 0.1uF +-10% 50 V CER X7R	06352	C2012X7R1H104K
C161	0180-3975	1	CAP-FXD 2.2uF +-20% 20 V TA	02010	TAJB225M020
C162	0160-7798	1	CAP-FXD 0.1uF +-10% 50 V CER X7R	06352	C2012X7R1H104K
C163	0160-7798	1	CAP-FXD 0.1uF +-10% 50 V CER X7R	06352	C2012X7R1H104K
C164	0160-7798	1	CAP-FXD 0.1uF +-10% 50 V CER X7R	06352	C2012X7R1H104K
C165	0160-7798	1	CAP-FXD 0.1uF +-10% 50 V CER X7R	06352	C2012X7R1H104K
C166	0160-7798	1	CAP-FXD 0.1uF +-10% 50 V CER X7R	06352	C2012X7R1H104K
C167	0160-7798	1	CAP-FXD 0.1uF +-10% 50 V CER X7R	06352	C2012X7R1H104K
C168	0160-7798	1	CAP-FXD 0.1uF +-10% 50 V CER X7R	06352	C2012X7R1H104K
C169	0160-7798	1	CAP-FXD 0.1uF +-10% 50 V CER X7R	06352	C2012X7R1H104K
C170	0160-7798	1	CAP-FXD 0.1uF +-10% 50 V CER X7R	06352	C2012X7R1H104K
C171	0160-7849	1	CAP-FXD 220pF +-5% 50 V CER C0G	02010	06035A221JAT
C172	0160-7798	1	CAP-FXD 0.1uF +-10% 50 V CER X7R	06352	C2012X7R1H104K
C173	0180-4287	1	CAP-FXD 10uF +-20% 35 V TA	02010	TAJD106M035
C174	0160-7798	1	CAP-FXD 0.1uF +-10% 50 V CER X7R	06352	C2012X7R1H104K
C175	0160-7798	1	CAP-FXD 0.1uF +-10% 50 V CER X7R	06352	C2012X7R1H104K
C176	0160-6717	1	CAP-FXD 1800pF +-2.5% 100 V POLYP-FL	06127	FKP2/1800PF/2.5%/ 100VDC
C177	0160-7751	1	CAP-FXD 0.01uF +-10% 50 V CER X7R	02010	06035C103KAT
C178	0160-7798	1	CAP-FXD 0.1uF +-10% 50 V CER X7R	06352	C2012X7R1H104K

 **Indicates factory-selected value*

Agilent Part Number E4401-60059
Processor

Reference Designator	Agilent Part Number	Qty	Description	Mgr Code	Mfr Part Number
C179	0160-7751	1	CAP-FXD 0.01uF +-10% 50 V CER X7R	02010	06035C103KAT
C182	0160-7798	1	CAP-FXD 0.1uF +-10% 50 V CER X7R	06352	C2012X7R1H104K
C183	0160-7751	1	CAP-FXD 0.01uF +-10% 50 V CER X7R	02010	06035C103KAT
C185	0180-4287	1	CAP-FXD 10uF +-20% 35 V TA	02010	TAJD106M035
C186	0160-7798	1	CAP-FXD 0.1uF +-10% 50 V CER X7R	06352	C2012X7R1H104K
C187	0160-7798	1	CAP-FXD 0.1uF +-10% 50 V CER X7R	06352	C2012X7R1H104K
C188	0160-7798	1	CAP-FXD 0.1uF +-10% 50 V CER X7R	06352	C2012X7R1H104K
C189	0160-7798	1	CAP-FXD 0.1uF +-10% 50 V CER X7R	06352	C2012X7R1H104K
C190	0160-7798	1	CAP-FXD 0.1uF +-10% 50 V CER X7R	06352	C2012X7R1H104K
C191	0160-7798	1	CAP-FXD 0.1uF +-10% 50 V CER X7R	06352	C2012X7R1H104K
C192	0160-7798	1	CAP-FXD 0.1uF +-10% 50 V CER X7R	06352	C2012X7R1H104K
C193	0160-7798	1	CAP-FXD 0.1uF +-10% 50 V CER X7R	06352	C2012X7R1H104K
C194	0160-7798	1	CAP-FXD 0.1uF +-10% 50 V CER X7R	06352	C2012X7R1H104K
C195	0180-4287	1	CAP-FXD 10uF +-20% 35 V TA	02010	TAJD106M035
C196	0160-7798	1	CAP-FXD 0.1uF +-10% 50 V CER X7R	06352	C2012X7R1H104K
C197	0160-7798	1	CAP-FXD 0.1uF +-10% 50 V CER X7R	06352	C2012X7R1H104K
C198	0160-7798	1	CAP-FXD 0.1uF +-10% 50 V CER X7R	06352	C2012X7R1H104K
C199	0180-4287	1	CAP-FXD 10uF +-20% 35 V TA	02010	TAJD106M035
C200	0160-7798	1	CAP-FXD 0.1uF +-10% 50 V CER X7R	06352	C2012X7R1H104K
C201	0160-7798	1	CAP-FXD 0.1uF +-10% 50 V CER X7R	06352	C2012X7R1H104K
C202	0160-7798	1	CAP-FXD 0.1uF +-10% 50 V CER X7R	06352	C2012X7R1H104K
C203	0160-7798	1	CAP-FXD 0.1uF +-10% 50 V CER X7R	06352	C2012X7R1H104K
C204	0160-7798	1	CAP-FXD 0.1uF +-10% 50 V CER X7R	06352	C2012X7R1H104K
C205	0160-7977	1	CAP-FXD 75pF +-5% 50 V CER C0G	06352	C1608COG1H750J
C207	0160-7798	1	CAP-FXD 0.1uF +-10% 50 V CER X7R	06352	C2012X7R1H104K
C209	0160-7798	1	CAP-FXD 0.1uF +-10% 50 V CER X7R	06352	C2012X7R1H104K
C210	0160-7798	1	CAP-FXD 0.1uF +-10% 50 V CER X7R	06352	C2012X7R1H104K
C211	0160-7798	1	CAP-FXD 0.1uF +-10% 50 V CER X7R	06352	C2012X7R1H104K
C213	0160-7798	1	CAP-FXD 0.1uF +-10% 50 V CER X7R	06352	C2012X7R1H104K
C214	0160-7798	1	CAP-FXD 0.1uF +-10% 50 V CER X7R	06352	C2012X7R1H104K

**Indicates factory-selected value*

Scans by ArtekMedia => 2009

Agilent Part Number E4401-60059
Processor

Reference Designator	Agilent Part Number	Qty	Description	Mgr Code	Mfr Part Number
C215	0160-7798	1	CAP-FXD 0.1uF +-10% 50 V CER X7R	06352	C2012X7R1H104K
C216	0160-7798	1	CAP-FXD 0.1uF +-10% 50 V CER X7R	06352	C2012X7R1H104K
C217	0160-7798	1	CAP-FXD 0.1uF +-10% 50 V CER X7R	06352	C2012X7R1H104K
C218	0160-7798	1	CAP-FXD 0.1uF +-10% 50 V CER X7R	06352	C2012X7R1H104K
C219	0160-7798	1	CAP-FXD 0.1uF +-10% 50 V CER X7R	06352	C2012X7R1H104K
C220	0160-7798	1	CAP-FXD 0.1uF +-10% 50 V CER X7R	06352	C2012X7R1H104K
C221	0160-7798	1	CAP-FXD 0.1uF +-10% 50 V CER X7R	06352	C2012X7R1H104K
C222	0160-7798	1	CAP-FXD 0.1uF +-10% 50 V CER X7R	06352	C2012X7R1H104K
C223	0160-7798	1	CAP-FXD 0.1uF +-10% 50 V CER X7R	06352	C2012X7R1H104K
C224	0160-7798	1	CAP-FXD 0.1uF +-10% 50 V CER X7R	06352	C2012X7R1H104K
C225	0160-7798	1	CAP-FXD 0.1uF +-10% 50 V CER X7R	06352	C2012X7R1H104K
C226	0160-7834	1	CAP-FXD 10pF +-5% 50 V CER C0G	02010	06035A100JAT
C227	0160-7834	1	CAP-FXD 10pF +-5% 50 V CER C0G	02010	06035A100JAT
C228	0160-7798	1	CAP-FXD 0.1uF +-10% 50 V CER X7R	06352	C2012X7R1H104K
C229	0160-7834	1	CAP-FXD 10pF +-5% 50 V CER C0G	02010	06035A100JAT
C230	0160-7834	1	CAP-FXD 10pF +-5% 50 V CER C0G	02010	06035A100JAT
C231	0160-7798	1	CAP-FXD 0.1uF +-10% 50 V CER X7R	06352	C2012X7R1H104K
C232	0160-7834	1	CAP-FXD 10pF +-5% 50 V CER C0G	02010	06035A100JAT
C233	0160-7834	1	CAP-FXD 10pF +-5% 50 V CER C0G	02010	06035A100JAT
C234	0160-7834	1	CAP-FXD 10pF +-5% 50 V CER C0G	02010	06035A100JAT
C235	0160-7798	1	CAP-FXD 0.1uF +-10% 50 V CER X7R	06352	C2012X7R1H104K
C236	0160-7798	1	CAP-FXD 0.1uF +-10% 50 V CER X7R	06352	C2012X7R1H104K
C237	0160-7798	1	CAP-FXD 0.1uF +-10% 50 V CER X7R	06352	C2012X7R1H104K
C238	0160-7798	1	CAP-FXD 0.1uF +-10% 50 V CER X7R	06352	C2012X7R1H104K
C239	0160-7798	1	CAP-FXD 0.1uF +-10% 50 V CER X7R	06352	C2012X7R1H104K
C240	0160-7798	1	CAP-FXD 0.1uF +-10% 50 V CER X7R	06352	C2012X7R1H104K
C241	0160-7798	1	CAP-FXD 0.1uF +-10% 50 V CER X7R	06352	C2012X7R1H104K
C242	0160-7798	1	CAP-FXD 0.1uF +-10% 50 V CER X7R	06352	C2012X7R1H104K
C244	0160-7977	1	CAP-FXD 75pF +-5% 50 V CER C0G	06352	C1608COG1H750J
C245	0160-7798	1	CAP-FXD 0.1uF +-10% 50 V CER X7R	06352	C2012X7R1H104K

 **Indicates factory-selected value*

Agilent Part Number E4401-60059
Processor

Reference Designator	Agilent Part Number	Qty	Description	Mgr Code	Mfr Part Number
C246	0160-7798	1	CAP-FXD 0.1uF +-10% 50 V CER X7R	06352	C2012X7R1H104K
C247	0160-7798	1	CAP-FXD 0.1uF +-10% 50 V CER X7R	06352	C2012X7R1H104K
C248	0160-7798	1	CAP-FXD 0.1uF +-10% 50 V CER X7R	06352	C2012X7R1H104K
C249	0160-7798	1	CAP-FXD 0.1uF +-10% 50 V CER X7R	06352	C2012X7R1H104K
C250	0160-7798	1	CAP-FXD 0.1uF +-10% 50 V CER X7R	06352	C2012X7R1H104K
C251	0180-4287	1	CAP-FXD 10uF +-20% 35 V TA	02010	TAJD106M035
C252	0160-7798	1	CAP-FXD 0.1uF +-10% 50 V CER X7R	06352	C2012X7R1H104K
C253	0160-7798	1	CAP-FXD 0.1uF +-10% 50 V CER X7R	06352	C2012X7R1H104K
C254	0160-7798	1	CAP-FXD 0.1uF +-10% 50 V CER X7R	06352	C2012X7R1H104K
C255	0160-7798	1	CAP-FXD 0.1uF +-10% 50 V CER X7R	06352	C2012X7R1H104K
C256	0160-7798	1	CAP-FXD 0.1uF +-10% 50 V CER X7R	06352	C2012X7R1H104K
C257	0160-7798	1	CAP-FXD 0.1uF +-10% 50 V CER X7R	06352	C2012X7R1H104K
C261	0180-3751	1	CAP-FXD 1uF +-20% 35 V TA	02010	TAJB105M035
C262	0180-3751	1	CAP-FXD 1uF +-20% 35 V TA	02010	TAJB105M035
C263	0160-7798	1	CAP-FXD 0.1uF +-10% 50 V CER X7R	06352	C2012X7R1H104K
C264	0160-7798	1	CAP-FXD 0.1uF +-10% 50 V CER X7R	06352	C2012X7R1H104K
C265	0180-4287	1	CAP-FXD 10uF +-20% 35 V TA	02010	TAJD106M035
C266	0180-4287	1	CAP-FXD 10uF +-20% 35 V TA	02010	TAJD106M035
C267	0180-4287	1	CAP-FXD 10uF +-20% 35 V TA	02010	TAJD106M035
C268	0160-7798	1	CAP-FXD 0.1uF +-10% 50 V CER X7R	06352	C2012X7R1H104K
C269	0160-7798	1	CAP-FXD 0.1uF +-10% 50 V CER X7R	06352	C2012X7R1H104K
C270	0160-7798	1	CAP-FXD 0.1uF +-10% 50 V CER X7R	06352	C2012X7R1H104K
C271	0160-7798	1	CAP-FXD 0.1uF +-10% 50 V CER X7R	06352	C2012X7R1H104K
C272	0160-7798	1	CAP-FXD 0.1uF +-10% 50 V CER X7R	06352	C2012X7R1H104K
C273	0160-7798	1	CAP-FXD 0.1uF +-10% 50 V CER X7R	06352	C2012X7R1H104K
C274	0160-7798	1	CAP-FXD 0.1uF +-10% 50 V CER X7R	06352	C2012X7R1H104K
C275	0160-7798	1	CAP-FXD 0.1uF +-10% 50 V CER X7R	06352	C2012X7R1H104K
C276	0160-7798	1	CAP-FXD 0.1uF +-10% 50 V CER X7R	06352	C2012X7R1H104K
C277	0160-7798	1	CAP-FXD 0.1uF +-10% 50 V CER X7R	06352	C2012X7R1H104K
C278	0160-7798	1	CAP-FXD 0.1uF +-10% 50 V CER X7R	06352	C2012X7R1H104K

Scans by ArtekMedia => 2009

Agilent Part Number E4401-60059
Processor

Reference Designator	Agilent Part Number	Qty	Description	Mgr Code	Mfr Part Number
C279	0160-7798	1	CAP-FXD 0.1uF +-10% 50 V CER X7R	06352	C2012X7R1H104K
C280	0160-7798	1	CAP-FXD 0.1uF +-10% 50 V CER X7R	06352	C2012X7R1H104K
C281	0160-7798	1	CAP-FXD 0.1uF +-10% 50 V CER X7R	06352	C2012X7R1H104K
C282	0160-7798	1	CAP-FXD 0.1uF +-10% 50 V CER X7R	06352	C2012X7R1H104K
C283	0160-7798	1	CAP-FXD 0.1uF +-10% 50 V CER X7R	06352	C2012X7R1H104K
C284	0160-7748	1	CAP-FXD 1000pF +-10% 50 V CER X7R	02010	06035C102KAT
C285	0160-7748	1	CAP-FXD 1000pF +-10% 50 V CER X7R	02010	06035C102KAT
C286	0160-7798	1	CAP-FXD 0.1uF +-10% 50 V CER X7R	06352	C2012X7R1H104K
C287	0160-7798	1	CAP-FXD 0.1uF +-10% 50 V CER X7R	06352	C2012X7R1H104K
C300	0160-7798	1	CAP-FXD 0.1uF +-10% 50 V CER X7R	06352	C2012X7R1H104K
C301	0160-7751	1	CAP-FXD 0.01uF +-10% 50 V CER X7R	02010	06035C103KAT
C302	0160-7751	1	CAP-FXD 0.01uF +-10% 50 V CER X7R	02010	06035C103KAT
C303	0160-7751	1	CAP-FXD 0.01uF +-10% 50 V CER X7R	02010	06035C103KAT
C401	0160-7971	1	CAP-FXD 20pF +-5% 50 V CER C0G	02010	06035A200JAT
C402	0160-7798	1	CAP-FXD 0.1uF +-10% 50 V CER X7R	06352	C2012X7R1H104K
CR1	1906-0291	1	DIODE-DUAL 70V 100MA T0-236AA	02910	BAV99
CR2	1906-0291	1	DIODE-DUAL 70V 100MA T0-236AA	02910	BAV99
CR3	1906-0291	1	DIODE-DUAL 70V 100MA T0-236AA	02910	BAV99
CR4	1906-0291	1	DIODE-DUAL 70V 100MA T0-236AA	02910	BAV99
CR5	1906-0291	1	DIODE-DUAL 70V 100MA T0-236AA	02910	BAV99
CR7	1900-0074	1	DIODE-SCHOTTKY SM SIG	01542	HSMS-2810
CR8	1901-1227	1	DIODE-SWITCHING 75V 200MA 6NS TO-236	02910	BAS16
CR9	1900-0074	1	DIODE-SCHOTTKY SM SIG	01542	HSMS-2810
CR10	1901-1227	1	DIODE-SWITCHING 75V 200MA 6NS TO-236	02910	BAS16
CR11	1906-0291	1	DIODE-DUAL 70V 100MA T0-236AA	02910	BAV99
CR12	1901-1227	1	DIODE-SWITCHING 75V 200MA 6NS TO-236	02910	BAS16
CR13	1900-0074	1	DIODE-SCHOTTKY SM SIG	01542	HSMS-2810
CR14	1901-1227	1	DIODE-SWITCHING 75V 200MA 6NS TO-236	02910	BAS16
CR15	1900-0074	1	DIODE-SCHOTTKY SM SIG	01542	HSMS-2810
CR16	1901-1227	1	DIODE-SWITCHING 75V 200MA 6NS TO-236	02910	BAS16

 **Indicates factory-selected value*

Agilent Part Number E4401-60059
Processor

Reference Designator	Agilent Part Number	Qty	Description	Mgr Code	Mfr Part Number
CR17	1901-1227	1	DIODE-SWITCHING 75V 200MA 6NS TO-236	02910	BAS16
CR18	1901-1227	1	DIODE-SWITCHING 75V 200MA 6NS TO-236	02910	BAS16
CR19	1906-0291	1	DIODE-DUAL 70V 100MA T0-236AA	02910	BAV99
CR20	1906-0291	1	DIODE-DUAL 70V 100MA T0-236AA	02910	BAV99
CR21	1906-0291	1	DIODE-DUAL 70V 100MA T0-236AA	02910	BAV99
CR22	1906-0291	1	DIODE-DUAL 70V 100MA T0-236AA	02910	BAV99
CR23	1906-0291	1	DIODE-DUAL 70V 100MA T0-236AA	02910	BAV99
CR24	1906-0291	1	DIODE-DUAL 70V 100MA T0-236AA	02910	BAV99
CR25	1906-0291	1	DIODE-DUAL 70V 100MA T0-236AA	02910	BAV99
CR26	1906-0291	1	DIODE-DUAL 70V 100MA T0-236AA	02910	BAV99
CR30	1901-1332	1	DIODE-PWR-S 40V 1A	03038	10BQ040
CR31	1901-1227	1	DIODE-SWITCHING 75V 200MA 6NS TO-236	02910	BAS16
CR32	1901-1227	1	DIODE-SWITCHING 75V 200MA 6NS TO-236	02910	BAS16
CR33	1901-1227	1	DIODE-SWITCHING 75V 200MA 6NS TO-236	02910	BAS16
CR34	1901-1227	1	DIODE-SWITCHING 75V 200MA 6NS TO-236	02910	BAS16
DS1	1990-1713	1	LED-LAMP LUM-INT4MCD IF20MA-MAX BVR5V	01542	HSMG-C670
DS7	1990-1772	1	LED-LAMP LUM-INT1.6MCD IF20MA-MAX	01542	HSMS-C670
DS8	1990-1772	1	LED-LAMP LUM-INT1.6MCD IF20MA-MAX	01542	HSMS-C670
DS9	1990-1772	1	LED-LAMP LUM-INT1.6MCD IF20MA-MAX	01542	HSMS-C670
DS10	1990-1772	1	LED-LAMP LUM-INT1.6MCD IF20MA-MAX	01542	HSMS-C670
DS11	1990-1772	1	LED-LAMP LUM-INT1.6MCD IF20MA-MAX	01542	HSMS-C670
DS12	1990-1772	1	LED-LAMP LUM-INT1.6MCD IF20MA-MAX	01542	HSMS-C670
DS13	1990-1772	1	LED-LAMP LUM-INT1.6MCD IF20MA-MAX	01542	HSMS-C670
FB1	9170-1421	1	CORE-SHIELDING BEAD	06352	HF50ACB-322513
FB2	9170-1421	1	CORE-SHIELDING BEAD	06352	HF50ACB-322513
FB3	9170-1421	1	CORE-SHIELDING BEAD	06352	HF50ACB-322513
FB4	9170-1421	1	CORE-SHIELDING BEAD	06352	HF50ACB-322513
FB5	9170-1421	1	CORE-SHIELDING BEAD	06352	HF50ACB-322513
FB6	9170-1421	1	CORE-SHIELDING BEAD	06352	HF50ACB-322513

**Indicates factory-selected value*

Scans by ArtekMedia => 2009

Agilent Part Number E4401-60059
Processor

Reference Designator	Agilent Part Number	Qty	Description	Mgr Code	Mfr Part Number
FB7	9170-1421	1	CORE-SHIELDING BEAD	06352	HF50ACB-322513
FB8	9170-1421	1	CORE-SHIELDING BEAD	06352	HF50ACB-322513
FB9	9170-1421	1	CORE-SHIELDING BEAD	06352	HF50ACB-322513
FB10	9170-1421	1	CORE-SHIELDING BEAD	06352	HF50ACB-322513
FB100	9170-1659	1	CORE-SHIELDING BEAD	06352	MMZ1608S301A
FB101	9170-1659	1	CORE-SHIELDING BEAD	06352	MMZ1608S301A
FB102	9170-1659	1	CORE-SHIELDING BEAD	06352	MMZ1608S301A
FB103	9170-1659	1	CORE-SHIELDING BEAD	06352	MMZ1608S301A
FB104	9170-1659	1	CORE-SHIELDING BEAD	06352	MMZ1608S301A
FB105	9170-1585	1	CORE-SHIELDING BEAD	06352	ACB-2012-M-040-LT
FB106	9170-1585	1	CORE-SHIELDING BEAD	06352	ACB-2012-M-040-LT
FB107	9170-1659	1	CORE-SHIELDING BEAD	06352	MMZ1608S301A
FB108	9170-1659	1	CORE-SHIELDING BEAD	06352	MMZ1608S301A
FB109	9170-1659	1	CORE-SHIELDING BEAD	06352	MMZ1608S301A
FB110	9170-1659	1	CORE-SHIELDING BEAD	06352	MMZ1608S301A
FB111	9170-1659	1	CORE-SHIELDING BEAD	06352	MMZ1608S301A
FB112	9170-1659	1	CORE-SHIELDING BEAD	06352	MMZ1608S301A
FB113	9170-1659	1	CORE-SHIELDING BEAD	06352	MMZ1608S301A
FL1	9135-0461	1	FILTER-SUPPRESSION EMI; SMT; WORKING	09939	NFM61R10T102M00-621
FL2	9135-0461	1	FILTER-SUPPRESSION EMI; SMT; WORKING	09939	NFM61R10T102M00-621
FL3	9135-0461	1	FILTER-SUPPRESSION EMI; SMT; WORKING	09939	NFM61R10T102M00-621
FL4	9135-0461	1	FILTER-SUPPRESSION EMI; SMT; WORKING	09939	NFM61R10T102M00-621
FL5	9135-0461	1	FILTER-SUPPRESSION EMI; SMT; WORKING	09939	NFM61R10T102M00-621
FL6	9135-0461	1	FILTER-SUPPRESSION EMI; SMT; WORKING	09939	NFM61R10T102M00-621
FL7	9135-0461	1	FILTER-SUPPRESSION EMI; SMT; WORKING	09939	NFM61R10T102M00-621

 **Indicates factory-selected value*

Agilent Part Number E4401-60059
Processor

Reference Designator	Agilent Part Number	Qty	Description	Mgr Code	Mfr Part Number
FL8	9135-0461	1	FILTER-SUPPRESSION EMI; SMT; WORKING	09939	NFM61R10T102M00-621
FL9	9135-0461	1	FILTER-SUPPRESSION EMI; SMT; WORKING	09939	NFM61R10T102M00-621
FL10	9135-0461	1	FILTER-SUPPRESSION EMI; SMT; WORKING	09939	NFM61R10T102M00-621
FL11	9135-0461	1	FILTER-SUPPRESSION EMI; SMT; WORKING	09939	NFM61R10T102M00-621
FL12	9135-0461	1	FILTER-SUPPRESSION EMI; SMT; WORKING	09939	NFM61R10T102M00-621
FL13	9135-0461	1	FILTER-SUPPRESSION EMI; SMT; WORKING	09939	NFM61R10T102M00-621
J1	1252-5299	1	CONN-POST TYPE 2.0-PIN-SPCG-MTG-END	15101	FCN-725P010-G/WM
J2	1252-5906	1	CONN-RECT MICRORBN 100-CKT 100-CONT	01380	2-557101-5
J3	1252-5906	1	CONN-RECT MICRORBN 100-CKT 100-CONT	01380	2-557101-5
J6	1252-5582	1	CONN-RECT MICRORBN 80-CKT 80-CONT	03418	15-92-2480
J7	1252-2846	1	CONN-RECT D-SUBMIN 15-CKT 15-CONT	01380	748390-5
J8	1250-1842	1	CONNECTOR-RF BNC FEMALE PC-W-STDFS	05879	31-5506
J9	1250-1842	1	CONNECTOR-RF BNC FEMALE PC-W-STDFS	05879	31-5506
J13	1252-3156	1	CONN-POST TYPE .100-PIN-SPCG-MTG-END	13369	79275-103
J14	1252-3839	1	CONN-POST TYPE .100-PIN-SPCG-MTG-END	13369	69190-602
J15	1252-3156	1	CONN-POST TYPE .100-PIN-SPCG-MTG-END	13369	79275-103
J16	1252-1325	1	CONN-POST TYPE .100-PIN-SPCG-MTG-END	04726	N2510-6002UB
J17	1251-7776	1	CONN-POST TYPE .100-PIN-SPCG-MTG-END	03418	22-11-2022
L1	9140-1736	1	INDUCTOR 47uH +20% -20% 7.3W-mmX7.3LG-mm	06353	E636CY-470M-P3
L2	9140-1736	1	INDUCTOR 47uH +20% -20% 7.3W-mmX7.3LG-mm	06353	E636CY-470M-P3
L3	9140-1736	1	INDUCTOR 47uH +20% -20% 7.3W-mmX7.3LG-mm	06353	E636CY-470M-P3
L4	9140-1736	1	INDUCTOR 47uH +20% -20% 7.3W-mmX7.3LG-mm	06353	E636CY-470M-P3
L5	9140-1736	1	INDUCTOR 47uH +20% -20% 7.3W-mmX7.3LG-mm	06353	E636CY-470M-P3

Scans by ArtekMedia => 2009

Agilent Part Number E4401-60059
Processor

Reference Designator	Agilent Part Number	Qty	Description	Mgr Code	Mfr Part Number
L6	9140-1238	1	INDUCTOR 10uH +-5% 2.8W-mmX3.4LG-mm Q30	06352	NL322522T-100J
L7	9140-1777	1	INDUCTOR 1uH +20%-20% 7.3W-mmX7.3LG-mm	06353	636CY-1R0M
L8	9140-1526	1	INDUCTOR 56uH +-5% 2.8W-mmX3.4LG-mm Q30	06352	NL322522T-560J
L9	9140-1596	1	INDUCTOR 22uH +-5% 2.8W-mmX3.4LG-mm Q30	06352	NL322522T-220J
L10	9140-1526	1	INDUCTOR 56uH +-5% 2.8W-mmX3.4LG-mm Q30	06352	NL322522T-560J
MAJ2	E4401-00049	1	PANEL-DRESS	28480	E4401-00049
MAJ7	1251-2942	1	SCREW LOCK KIT-SUBMIN D CONN	02121	ST9422-36
MAJ8	2950-0054	1	NUT-HEX-DBL-CHAM 1/2-28-THD .125-IN-THK	04567	2950-0054
MAJ9	2950-0054	1	NUT-HEX-DBL-CHAM 1/2-28-THD .125-IN-THK	04567	2950-0054
MAU24	5021-5853	1	HT SK PGA 1.8"SQ	28480	5021-5853
MAU58	1420-0556	1	BATTERY ASSEMBLY BATTERY AND CRYS-TAL	04078	M4T28-BR12SH1
MBJ2	0515-1934	1	SCREW-MACHINE ASSEMBLY M2.5 X 0.45	05610	0515-1934
MBJ7	1251-2942	1	SCREW LOCK KIT-SUBMIN D CONN	02121	ST9422-36
MBU24	1205-1197	1	HEAT SINK FRAME; 53.34 X 48.26 MM SQ	07179	8318
MCU24	5001-0490	1	CLIP-RTR HT SINK	28480	5001-0490
P7	0360-0124	1	CONNECTOR-SGL CONT PIN .04-IN-BSC-SZ RND	13309	0360-0124
P8	0360-0124	1	CONNECTOR-SGL CONT PIN .04-IN-BSC-SZ RND	13309	0360-0124
P9	0360-0124	1	CONNECTOR-SGL CONT PIN .04-IN-BSC-SZ RND	13309	0360-0124
Q1	1855-0680	1	TRANSISTOR J-FET N-CHAN D-MODE SOT-23	36633	MMBF4391LT1
Q2	1855-0680	1	TRANSISTOR J-FET N-CHAN D-MODE SOT-23	36633	MMBF4391LT1
Q3	1858-0112	1	TRANSISTOR ARRAY 16-PIN PLSTC SURFACE	02237	MMPQ2222A
Q4	1858-0112	1	TRANSISTOR ARRAY 16-PIN PLSTC SURFACE	02237	MMPQ2222A
Q5	1855-0680	1	TRANSISTOR J-FET N-CHAN D-MODE SOT-23	36633	MMBF4391LT1
Q7	1855-0680	1	TRANSISTOR J-FET N-CHAN D-MODE SOT-23	36633	MMBF4391LT1
Q8	1855-0680	1	TRANSISTOR J-FET N-CHAN D-MODE SOT-23	36633	MMBF4391LT1
Q9	1854-1037	1	TRANSISTOR NPN SI TO-236AA PD350MW	00746	SST3904T116
Q10	1855-0680	1	TRANSISTOR J-FET N-CHAN D-MODE SOT-23	36633	MMBF4391LT1

 **Indicates factory-selected value*

Agilent Part Number E4401-60059
Processor

Reference Designator	Agilent Part Number	Qty	Description	Mgr Code	Mfr Part Number
Q11	1853-0567	1	TRANSISTOR PNP SI SOT-23 (TO-236AB)	00746	SST3906T116
Q12	1853-0567	1	TRANSISTOR PNP SI SOT-23 (TO-236AB)	00746	SST3906T116
Q13	1855-0856	1	TRANSISTOR J-FET P-CHAN SOT-23	05524	SST174
Q14	1854-1095	1	TRANSISTOR NPN SI SOT-23 (TO-236AB)	36633	MMBT2369LT1
Q100	1855-0936	1	TRANSISTOR MOSFET P-CHAN E-MODE SI SO-8	05524	SI9433DY
R1	0699-3993	1	RESISTOR 100K +-1% .063W TKF TC0+-200	09891	RK73H1J1003F
R2	0699-3913	1	RESISTOR 31.6 +-1% .063W TKF TC0+-200	09891	RK73H1J31R6F
R3	0699-3913	1	RESISTOR 31.6 +-1% .063W TKF TC0+-200	09891	RK73H1J31R6F
R4	0699-3970	1	RESISTOR 10K +-1% .063W TKF TC0+-200	09891	RK73H1J1002F
R5	0699-3970	1	RESISTOR 10K +-1% .063W TKF TC0+-200	09891	RK73H1J1002F
R6	0699-3915	1	RESISTOR 38.3 +-1% .063W TKF TC0+-200	09891	RK73H1J38R3F
R7	0699-3913	1	RESISTOR 31.6 +-1% .063W TKF TC0+-200	09891	RK73H1J31R6F
R8	0699-3913	1	RESISTOR 31.6 +-1% .063W TKF TC0+-200	09891	RK73H1J31R6F
R9	0699-3913	1	RESISTOR 31.6 +-1% .063W TKF TC0+-200	09891	RK73H1J31R6F
R10	0699-1361	1	RESISTOR 51.1 +-1% .125W TKF TC0+-100	05524	CRCW120651R1F
R11	1810-1581	1	NET-RES 4 33.0 OHM 8-PIN	00746	MNR34K5AWJ330
R12	1810-1581	1	NET-RES 4 33.0 OHM 8-PIN	00746	MNR34K5AWJ330
R13	0699-3964	1	RESISTOR 5.11K +-1% .063W TKF TC0+-200	09891	RK73H1J5111F
R14	0699-3574	1	RESISTOR 0 .0625W TKF	09891	RM73Z1JT
R15	0699-3914	1	RESISTOR 34.8 +-1% .063W TKF TC0+-200	00746	MCR03-F-34R8
R16	0699-3932	1	RESISTOR 215 +-1% .063W TKF TC0+-200	00746	MCR03-F-2150
R17	0699-3574	1	RESISTOR 0 .0625W TKF	09891	RM73Z1JT
R18	0699-3574	1	RESISTOR 0 .0625W TKF	09891	RM73Z1JT
R19	0699-3574	1	RESISTOR 0 .0625W TKF	09891	RM73Z1JT
R20	0699-3913	1	RESISTOR 31.6 +-1% .063W TKF TC0+-200	09891	RK73H1J31R6F
R21	0699-3970	1	RESISTOR 10K +-1% .063W TKF TC0+-200	09891	RK73H1J1002F
R22	0699-3986	1	RESISTOR 46.4K +-1% .063W TKF TC0+-200	09891	RK73H1J4642F
R23	0699-3970	1	RESISTOR 10K +-1% .063W TKF TC0+-200	09891	RK73H1J1002F
R24	0699-3986	1	RESISTOR 46.4K +-1% .063W TKF TC0+-200	09891	RK73H1J4642F

**Indicates factory-selected value*

Scans by ArtekMedia => 2009

Agilent Part Number E4401-60059
Processor

Reference Designator	Agilent Part Number	Qty	Description	Mgr Code	Mfr Part Number
R25	0699-3986	1	RESISTOR 46.4K +-1% .063W TKF TC0+-200	09891	RK73H1J4642F
R26	0699-3964	1	RESISTOR 5.11K +-1% .063W TKF TC0+-200	09891	RK73H1J5111F
R27	0699-3944	1	RESISTOR 750 +-1% .063W TKF TC0+-200	09891	RK73H1J7500F
R28	0699-3964	1	RESISTOR 5.11K +-1% .063W TKF TC0+-200	09891	RK73H1J5111F
R29	0699-3944	1	RESISTOR 750 +-1% .063W TKF TC0+-200	09891	RK73H1J7500F
R30	0699-3944	1	RESISTOR 750 +-1% .063W TKF TC0+-200	09891	RK73H1J7500F
R31	0699-3964	1	RESISTOR 5.11K +-1% .063W TKF TC0+-200	09891	RK73H1J5111F
R32	0699-3964	1	RESISTOR 5.11K +-1% .063W TKF TC0+-200	09891	RK73H1J5111F
R33	1810-1581	1	NET-RES 4 33.0 OHM 8-PIN	00746	MNR34K5AWJ330
R34	1810-1581	1	NET-RES 4 33.0 OHM 8-PIN	00746	MNR34K5AWJ330
R35	1810-1581	1	NET-RES 4 33.0 OHM 8-PIN	00746	MNR34K5AWJ330
R36	0699-3964	1	RESISTOR 5.11K +-1% .063W TKF TC0+-200	09891	RK73H1J5111F
R37	0699-3913	1	RESISTOR 31.6 +-1% .063W TKF TC0+-200	09891	RK73H1J31R6F
R38	1810-1682	1	NET-RES 8 4.7K OHM 10-PIN	00746	MNR35J5RJ472
R39	1810-1682	1	NET-RES 8 4.7K OHM 10-PIN	00746	MNR35J5RJ472
R40	1810-1682	1	NET-RES 8 4.7K OHM 10-PIN	00746	MNR35J5RJ472
R41	1810-1682	1	NET-RES 8 4.7K OHM 10-PIN	00746	MNR35J5RJ472
R42	0699-3943	1	RESISTOR 681 +-1% .063W TKF TC0+-200	00746	MCR03-F-6810
R43	0699-3941	1	RESISTOR 511 +-1% .063W TKF TC0+-200	00746	MCR03-F-5110
R44	0699-3951	1	RESISTOR 1.47K +-1% .063W TKF TC0+-200	00746	MCR03-F-1471
R45	0699-3951	1	RESISTOR 1.47K +-1% .063W TKF TC0+-200	00746	MCR03-F-1471
R46	0699-3964	1	RESISTOR 5.11K +-1% .063W TKF TC0+-200	09891	RK73H1J5111F
R47	0699-3913	1	RESISTOR 31.6 +-1% .063W TKF TC0+-200	09891	RK73H1J31R6F
R48	0699-2832	1	RESISTOR 200 +-0.1% .125W TF TC0+-25	02499	W1206R032000BT
R49	0699-1417	1	RESISTOR 121 +-1% .125W TKF TC0+-100	09891	RK73H2BT1210F
R50	0699-3965	1	RESISTOR 6.19K +-1% .063W TKF TC0+-200	09891	RK73H1J6191F
R51	0699-3965	1	RESISTOR 6.19K +-1% .063W TKF TC0+-200	09891	RK73H1J6191F
R52	0699-1423	1	RESISTOR 215 +-1% .125W TKF TC0+-100	05524	CRCW12062150F
R53	0699-1430	1	RESISTOR 422 +-1% .125W TKF TC0+-100	05524	CRCW12064220F
R54	0699-1430	1	RESISTOR 422 +-1% .125W TKF TC0+-100	05524	CRCW12064220F

 **Indicates factory-selected value*

Agilent Part Number E4401-60059
Processor

Reference Designator	Agilent Part Number	Qty	Description	Mgr Code	Mfr Part Number
R55	0699-3964	1	RESISTOR 5.11K +-1% .063W TKF TC0+-200	09891	RK73H1J5111F
R56	0699-3901	1	RESISTOR 10 +-1% .063W TKF TC0+-200	00746	MCR03-F-10R0
R57	0699-3901	1	RESISTOR 10 +-1% .063W TKF TC0+-200	00746	MCR03-F-10R0
R59	0699-3993	1	RESISTOR 100K +-1% .063W TKF TC0+-200	09891	RK73H1J1003F
R62	0699-3926	1	RESISTOR 121 +-1% .063W TKF TC0+-200	00746	MCR03-F-1210
R63	0699-2484	1	RESISTOR 50K +-0.1% .125W TF TC0+-25	01172	BLU-1206 50K .1% 25PPM
R66	0699-3924	1	RESISTOR 100 +-1% .063W TKF TC0+-200	00746	MCR03-F-1000
R69	0699-3909	1	RESISTOR 21.5 +-1% .063W TKF TC0+-200	09891	RK73H1J21R5F
R73	0699-3574	1	RESISTOR 0 .0625W TKF	09891	RM73Z1JT
R75	0699-2484	1	RESISTOR 50K +-0.1% .125W TF TC0+-25	01172	BLU-1206 50K .1% 25PPM
R78	0699-3993	1	RESISTOR 100K +-1% .063W TKF TC0+-200	09891	RK73H1J1003F
R79	0699-3926	1	RESISTOR 121 +-1% .063W TKF TC0+-200	00746	MCR03-F-1210
R81	0699-3574	1	RESISTOR 0 .0625W TKF	09891	RM73Z1JT
R82	0699-3970	1	RESISTOR 10K +-1% .063W TKF TC0+-200	09891	RK73H1J1002F
R83	0699-1361	1	RESISTOR 51.1 +-1% .125W TKF TC0+-100	05524	CRCW120651R1F
R84	0699-3980	1	RESISTOR 26.1K +-1% .063W TKF TC0+-100	09891	RK73H1J2612F
R85	0699-2824	1	RESISTOR 7.5K +-0.1% .125W TF TC0+-25	01172	BLU-1206 7K5 .1% 25PPM
R86	0699-2490	1	RESISTOR 1K +-0.1% .125W TF TC0+-25	01172	BLU-1206 1K .1% 25PPM
R87	0699-3369	1	RESISTOR 562K +-1% .065W TKF TC0+-200	09891	RK73H1J5623F
R88	0699-3918	1	RESISTOR 51.1 +-1% .063W TKF TC0+-200	00746	MCR03-F-51R1
R89	0699-3937	1	RESISTOR 348 +-1% .063W TKF TC0+-200	00746	MCR03-F-3480
R90	0699-2848	1	RESISTOR 18K +-0.1% .125W TF TC0+-25	01172	BLU-1206 18K .1% 25PPM
R91	0699-2489	1	RESISTOR 10K +-0.1% .125W TF TC0+-25	01172	BLU-1206 10K .1% 25PPM
R92	0699-1361	1	RESISTOR 51.1 +-1% .125W TKF TC0+-100	05524	CRCW120651R1F
R93	0699-3970	1	RESISTOR 10K +-1% .063W TKF TC0+-200	09891	RK73H1J1002F

Scans by ArtekMedia => 2009

Agilent Part Number E4401-60059
Processor

Reference Designator	Agilent Part Number	Qty	Description	Mgr Code	Mfr Part Number
R94	0699-2489	1	RESISTOR 10K +-0.1% .125W TF TC0+-25	01172	BLU-1206 10K .1% 25PPM
R95	0699-2840	1	RESISTOR 2.5K +-0.1% .125W TF TC0+-25	02499	W1206R032501BT
R96	0699-3901	1	RESISTOR 10 +-1% .063W TKF TC0+-200	00746	MCR03-F-10R0
R97	0699-3901	1	RESISTOR 10 +-1% .063W TKF TC0+-200	00746	MCR03-F-10R0
R98	0699-3917	1	RESISTOR 46.4 +-1% .063W TKF TC0+-200	09891	RK73H1J46R4F
R99	0699-3993	1	RESISTOR 100K +-1% .063W TKF TC0+-200	09891	RK73H1J1003F
R100	0699-3993	1	RESISTOR 100K +-1% .063W TKF TC0+-200	09891	RK73H1J1003F
R101	0699-3955	1	RESISTOR 2.15K +-1% .063W TKF TC0+-200	09891	RK73H1J2151F
R102	0699-3955	1	RESISTOR 2.15K +-1% .063W TKF TC0+-200	09891	RK73H1J2151F
R103	0699-3965	1	RESISTOR 6.19K +-1% .063W TKF TC0+-200	09891	RK73H1J6191F
R104	0699-3970	1	RESISTOR 10K +-1% .063W TKF TC0+-200	09891	RK73H1J1002F
R105	0699-3935	1	RESISTOR 287 +-1% .063W TKF TC0+-200	00746	MCR03-F-2870
R106	0699-1361	1	RESISTOR 51.1 +-1% .125W TKF TC0+-100	05524	CRCW120651R1F
R107	0699-2442	1	RESISTOR 2.2 +-5% .125W TKF TC0+-200	09891	RM73B2BT2R2J
R108	0699-3970	1	RESISTOR 10K +-1% .063W TKF TC0+-200	09891	RK73H1J1002F
R109	0699-3368	1	RESISTOR 56.2K +-1% .063W TKF TC0+-200	05524	CRCW06035622F
R110	0699-3924	1	RESISTOR 100 +-1% .063W TKF TC0+-200	00746	MCR03-F-1000
R111	0699-3979	1	RESISTOR 23.7K +-1% .063W TKF TC0+-200	09891	RK73H1J2372F
R112	0699-3943	1	RESISTOR 681 +-1% .063W TKF TC0+-200	00746	MCR03-F-6810
R113	0699-3941	1	RESISTOR 511 +-1% .063W TKF TC0+-200	00746	MCR03-F-5110
R114	0699-3934	1	RESISTOR 261 +-1% .063W TKF TC0+-200	09891	RK73H1J2610F
R115	0699-3941	1	RESISTOR 511 +-1% .063W TKF TC0+-200	00746	MCR03-F-5110
R116	0699-3970	1	RESISTOR 10K +-1% .063W TKF TC0+-200	09891	RK73H1J1002F
R117	0699-3954	1	RESISTOR 1.96K +-1% .063W TKF TC0+-200	09891	RK73H1J1961F
R118	1810-1682	1	NET-RES 8 4.7K OHM 10-PIN	00746	MNR35J5RJ472
R119	0699-3997	1	RESISTOR 147K +-1% .063W TKF TC0+-200	09891	RK73H1J1473F
R120	0699-4003	1	RESISTOR 261K +-1% .063W TKF TC0+-200	09891	RK73H1J2613F
R121	0699-1422	1	RESISTOR 196 +-1% .125W TKF TC0+-100	09891	RK73H2BT1960F
R122	0699-3913	1	RESISTOR 31.6 +-1% .063W TKF TC0+-200	09891	RK73H1J31R6F

 **Indicates factory-selected value*

Agilent Part Number E4401-60059
Processor

Reference Designator	Agilent Part Number	Qty	Description	Mgr Code	Mfr Part Number
R123	0699-3947	1	RESISTOR 1K +-1% .063W TKF TC0+-200	00746	MCR03-F-1001
R124	0699-3986	1	RESISTOR 46.4K +-1% .063W TKF TC0+-200	09891	RK73H1J4642F
R125	0699-3913	1	RESISTOR 31.6 +-1% .063W TKF TC0+-200	09891	RK73H1J31R6F
R126	0699-3964	1	RESISTOR 5.11K +-1% .063W TKF TC0+-200	09891	RK73H1J5111F
R127	1810-1682	1	NET-RES 8 4.7K OHM 10-PIN	00746	MNR35J5RJ472
R128	0699-3964	1	RESISTOR 5.11K +-1% .063W TKF TC0+-200	09891	RK73H1J5111F
R129	1810-1581	1	NET-RES 4 33.0 OHM 8-PIN	00746	MNR34K5AWJ330
R130	1810-1581	1	NET-RES 4 33.0 OHM 8-PIN	00746	MNR34K5AWJ330
R131	0699-3986	1	RESISTOR 46.4K +-1% .063W TKF TC0+-200	09891	RK73H1J4642F
R132	0699-3964	1	RESISTOR 5.11K +-1% .063W TKF TC0+-200	09891	RK73H1J5111F
R133	1810-1682	1	NET-RES 8 4.7K OHM 10-PIN	00746	MNR35J5RJ472
R134	1810-1581	1	NET-RES 4 33.0 OHM 8-PIN	00746	MNR34K5AWJ330
R135	0699-3964	1	RESISTOR 5.11K +-1% .063W TKF TC0+-200	09891	RK73H1J5111F
R136	1810-1581	1	NET-RES 4 33.0 OHM 8-PIN	00746	MNR34K5AWJ330
R137	1810-1581	1	NET-RES 4 33.0 OHM 8-PIN	00746	MNR34K5AWJ330
R138	0699-3964	1	RESISTOR 5.11K +-1% .063W TKF TC0+-200	09891	RK73H1J5111F
R139	1810-1581	1	NET-RES 4 33.0 OHM 8-PIN	00746	MNR34K5AWJ330
R140	1810-1581	1	NET-RES 4 33.0 OHM 8-PIN	00746	MNR34K5AWJ330
R141	1810-1581	1	NET-RES 4 33.0 OHM 8-PIN	00746	MNR34K5AWJ330
R142	1810-1581	1	NET-RES 4 33.0 OHM 8-PIN	00746	MNR34K5AWJ330
R143	0699-3964	1	RESISTOR 5.11K +-1% .063W TKF TC0+-200	09891	RK73H1J5111F
R144	1810-1581	1	NET-RES 4 33.0 OHM 8-PIN	00746	MNR34K5AWJ330
R145	1810-1581	1	NET-RES 4 33.0 OHM 8-PIN	00746	MNR34K5AWJ330
R146	0699-3918	1	RESISTOR 51.1 +-1% .063W TKF TC0+-200	00746	MCR03-F-51R1
R147	0699-3964	1	RESISTOR 5.11K +-1% .063W TKF TC0+-200	09891	RK73H1J5111F
R148	0699-3913	1	RESISTOR 31.6 +-1% .063W TKF TC0+-200	09891	RK73H1J31R6F
R149	0699-3913	1	RESISTOR 31.6 +-1% .063W TKF TC0+-200	09891	RK73H1J31R6F
R150	0699-3964	1	RESISTOR 5.11K +-1% .063W TKF TC0+-200	09891	RK73H1J5111F
R151	0699-3964	1	RESISTOR 5.11K +-1% .063W TKF TC0+-200	09891	RK73H1J5111F
R152	0699-3964	1	RESISTOR 5.11K +-1% .063W TKF TC0+-200	09891	RK73H1J5111F

Scans by ArtekMedia => 2009

Agilent Part Number E4401-60059
Processor

Reference Designator	Agilent Part Number	Qty	Description	Mgr Code	Mfr Part Number
R153	0699-3964	1	RESISTOR 5.11K +-1% .063W TKF TC0+-200	09891	RK73H1J5111F
R154	0699-3913	1	RESISTOR 31.6 +-1% .063W TKF TC0+-200	09891	RK73H1J31R6F
R155	0699-3964	1	RESISTOR 5.11K +-1% .063W TKF TC0+-200	09891	RK73H1J5111F
R156	0699-3964	1	RESISTOR 5.11K +-1% .063W TKF TC0+-200	09891	RK73H1J5111F
R157	0699-3970	1	RESISTOR 10K +-1% .063W TKF TC0+-200	09891	RK73H1J1002F
R158	0699-3964	1	RESISTOR 5.11K +-1% .063W TKF TC0+-200	09891	RK73H1J5111F
R159	0699-3913	1	RESISTOR 31.6 +-1% .063W TKF TC0+-200	09891	RK73H1J31R6F
R160	0699-3964	1	RESISTOR 5.11K +-1% .063W TKF TC0+-200	09891	RK73H1J5111F
R161	0699-3913	1	RESISTOR 31.6 +-1% .063W TKF TC0+-200	09891	RK73H1J31R6F
R162	0699-3913	1	RESISTOR 31.6 +-1% .063W TKF TC0+-200	09891	RK73H1J31R6F
R163	0699-3913	1	RESISTOR 31.6 +-1% .063W TKF TC0+-200	09891	RK73H1J31R6F
R164	0699-3913	1	RESISTOR 31.6 +-1% .063W TKF TC0+-200	09891	RK73H1J31R6F
R165	0699-3913	1	RESISTOR 31.6 +-1% .063W TKF TC0+-200	09891	RK73H1J31R6F
R166	0699-3913	1	RESISTOR 31.6 +-1% .063W TKF TC0+-200	09891	RK73H1J31R6F
R167	0699-3913	1	RESISTOR 31.6 +-1% .063W TKF TC0+-200	09891	RK73H1J31R6F
R168	0699-3964	1	RESISTOR 5.11K +-1% .063W TKF TC0+-200	09891	RK73H1J5111F
R169	0699-3964	1	RESISTOR 5.11K +-1% .063W TKF TC0+-200	09891	RK73H1J5111F
R170	0699-3964	1	RESISTOR 5.11K +-1% .063W TKF TC0+-200	09891	RK73H1J5111F
R171	0699-3964	1	RESISTOR 5.11K +-1% .063W TKF TC0+-200	09891	RK73H1J5111F
R172	0699-3964	1	RESISTOR 5.11K +-1% .063W TKF TC0+-200	09891	RK73H1J5111F
R173	0699-3954	1	RESISTOR 1.96K +-1% .063W TKF TC0+-200	09891	RK73H1J1961F
R174	0699-3986	1	RESISTOR 46.4K +-1% .063W TKF TC0+-200	09891	RK73H1J4642F
R175	0699-3986	1	RESISTOR 46.4K +-1% .063W TKF TC0+-200	09891	RK73H1J4642F
R176	1810-1682	1	NET-RES 8 4.7K OHM 10-PIN	00746	MNR35J5RJ472
R177	1810-1578	1	NET-RES 4 1.0K OHM 8-PIN	00746	MNR34K5ABJ102
R178	0699-3964	1	RESISTOR 5.11K +-1% .063W TKF TC0+-200	09891	RK73H1J5111F
R179	0699-3971	1	RESISTOR 11K +-1% .063W TKF TC0+-200	00746	MCR03-F-1102
R180	0699-3947	1	RESISTOR 1K +-1% .063W TKF TC0+-200	00746	MCR03-F-1001
R181	0699-3970	1	RESISTOR 10K +-1% .063W TKF TC0+-200	09891	RK73H1J1002F
R182	0699-3984	1	RESISTOR 38.3K +-1% .063W TKF TC0+-200	09891	RK73H1J3832F

 **Indicates factory-selected value*

Agilent Part Number E4401-60059
Processor

Reference Designator	Agilent Part Number	Qty	Description	Mgr Code	Mfr Part Number
R183	0699-3993	1	RESISTOR 100K +-1% .063W TKF TC0+-200	09891	RK73H1J1003F
R184	0699-3964	1	RESISTOR 5.11K +-1% .063W TKF TC0+-200	09891	RK73H1J5111F
R185	0699-3964	1	RESISTOR 5.11K +-1% .063W TKF TC0+-200	09891	RK73H1J5111F
R188	0699-3931	1	RESISTOR 196 +-1% .063W TKF TC0+-200	09891	RK73H1J1960F
R189	0699-3982	1	RESISTOR 31.6K +-1% .063W TKF TC0+-200	09891	RK73H1J3162F
R190	0699-3574	1	RESISTOR 0 .0625W TKF	09891	RM73Z1JT
R192	0699-3574	1	RESISTOR 0 .0625W TKF	09891	RM73Z1JT
R193	0699-3964	1	RESISTOR 5.11K +-1% .063W TKF TC0+-200	09891	RK73H1J5111F
R199	0699-3901	1	RESISTOR 10 +-1% .063W TKF TC0+-200	00746	MCR03-F-10R0
R200	0699-3901	1	RESISTOR 10 +-1% .063W TKF TC0+-200	00746	MCR03-F-10R0
R201	0699-3917	1	RESISTOR 46.4 +-1% .063W TKF TC0+-200	09891	RK73H1J46R4F
R202	0699-3964	1	RESISTOR 5.11K +-1% .063W TKF TC0+-200	09891	RK73H1J5111F
R203	0699-3965	1	RESISTOR 6.19K +-1% .063W TKF TC0+-200	09891	RK73H1J6191F
R204	0699-3970	1	RESISTOR 10K +-1% .063W TKF TC0+-200	09891	RK73H1J1002F
R205	0699-1361	1	RESISTOR 51.1 +-1% .125W TKF TC0+-100	05524	CRCW120651R1F
R206	0699-3970	1	RESISTOR 10K +-1% .063W TKF TC0+-200	09891	RK73H1J1002F
R207	0699-3964	1	RESISTOR 5.11K +-1% .063W TKF TC0+-200	09891	RK73H1J5111F
R208	0699-3986	1	RESISTOR 46.4K +-1% .063W TKF TC0+-200	09891	RK73H1J4642F
R209	0699-3964	1	RESISTOR 5.11K +-1% .063W TKF TC0+-200	09891	RK73H1J5111F
R210	0699-3964	1	RESISTOR 5.11K +-1% .063W TKF TC0+-200	09891	RK73H1J5111F
R211	0699-3935	1	RESISTOR 287 +-1% .063W TKF TC0+-200	00746	MCR03-F-2870
R212	0699-2442	1	RESISTOR 2.2 +-5% .125W TKF TC0+-200	09891	RM73B2BT2R2J
R213	0699-3964	1	RESISTOR 5.11K +-1% .063W TKF TC0+-200	09891	RK73H1J5111F
R214	0699-3970	1	RESISTOR 10K +-1% .063W TKF TC0+-200	09891	RK73H1J1002F
R215	0699-3964	1	RESISTOR 5.11K +-1% .063W TKF TC0+-200	09891	RK73H1J5111F
R216	0699-3368	1	RESISTOR 56.2K +-1% .063W TKF TC0+-200	05524	CRCW06035622F
R217	0699-3964	1	RESISTOR 5.11K +-1% .063W TKF TC0+-200	09891	RK73H1J5111F
R218	0699-3964	1	RESISTOR 5.11K +-1% .063W TKF TC0+-200	09891	RK73H1J5111F
R219	0699-3924	1	RESISTOR 100 +-1% .063W TKF TC0+-200	00746	MCR03-F-1000
R220	0699-3970	1	RESISTOR 10K +-1% .063W TKF TC0+-200	09891	RK73H1J1002F

**Indicates factory-selected value*

Scans by ArtekMedia => 2009

Agilent Part Number E4401-60059
Processor

Reference Designator	Agilent Part Number	Qty	Description	Mgr Code	Mfr Part Number
R221	0699-3943	1	RESISTOR 681 +-1% .063W TKF TC0+-200	00746	MCR03-F-6810
R223	0699-3947	1	RESISTOR 1K +-1% .063W TKF TC0+-200	00746	MCR03-F-1001
R224	0699-3970	1	RESISTOR 10K +-1% .063W TKF TC0+-200	09891	RK73H1J1002F
R225	0699-3934	1	RESISTOR 261 +-1% .063W TKF TC0+-200	09891	RK73H1J2610F
R226	0699-3941	1	RESISTOR 511 +-1% .063W TKF TC0+-200	00746	MCR03-F-5110
R227	0699-3970	1	RESISTOR 10K +-1% .063W TKF TC0+-200	09891	RK73H1J1002F
R228	0699-3941	1	RESISTOR 511 +-1% .063W TKF TC0+-200	00746	MCR03-F-5110
R229	0699-3964	1	RESISTOR 5.11K +-1% .063W TKF TC0+-200	09891	RK73H1J5111F
R230	0699-3970	1	RESISTOR 10K +-1% .063W TKF TC0+-200	09891	RK73H1J1002F
R231	0699-3986	1	RESISTOR 46.4K +-1% .063W TKF TC0+-200	09891	RK73H1J4642F
R232	0699-3964	1	RESISTOR 5.11K +-1% .063W TKF TC0+-200	09891	RK73H1J5111F
R233	0699-3964	1	RESISTOR 5.11K +-1% .063W TKF TC0+-200	09891	RK73H1J5111F
R234	0699-3964	1	RESISTOR 5.11K +-1% .063W TKF TC0+-200	09891	RK73H1J5111F
R235	0699-3964	1	RESISTOR 5.11K +-1% .063W TKF TC0+-200	09891	RK73H1J5111F
R236	0699-3964	1	RESISTOR 5.11K +-1% .063W TKF TC0+-200	09891	RK73H1J5111F
R237	0699-3964	1	RESISTOR 5.11K +-1% .063W TKF TC0+-200	09891	RK73H1J5111F
R238	0699-3986	1	RESISTOR 46.4K +-1% .063W TKF TC0+-200	09891	RK73H1J4642F
R239	0699-3986	1	RESISTOR 46.4K +-1% .063W TKF TC0+-200	09891	RK73H1J4642F
R240	0699-3986	1	RESISTOR 46.4K +-1% .063W TKF TC0+-200	09891	RK73H1J4642F
R241	0699-3964	1	RESISTOR 5.11K +-1% .063W TKF TC0+-200	09891	RK73H1J5111F
R242	0699-3986	1	RESISTOR 46.4K +-1% .063W TKF TC0+-200	09891	RK73H1J4642F
R243	0699-3964	1	RESISTOR 5.11K +-1% .063W TKF TC0+-200	09891	RK73H1J5111F
R244	0699-3964	1	RESISTOR 5.11K +-1% .063W TKF TC0+-200	09891	RK73H1J5111F
R245	0699-3964	1	RESISTOR 5.11K +-1% .063W TKF TC0+-200	09891	RK73H1J5111F
R246	0699-3964	1	RESISTOR 5.11K +-1% .063W TKF TC0+-200	09891	RK73H1J5111F
R247	0699-3964	1	RESISTOR 5.11K +-1% .063W TKF TC0+-200	09891	RK73H1J5111F
R248	0699-3964	1	RESISTOR 5.11K +-1% .063W TKF TC0+-200	09891	RK73H1J5111F
R249	0699-3964	1	RESISTOR 5.11K +-1% .063W TKF TC0+-200	09891	RK73H1J5111F
R250	0699-3964	1	RESISTOR 5.11K +-1% .063W TKF TC0+-200	09891	RK73H1J5111F
R251	0699-3964	1	RESISTOR 5.11K +-1% .063W TKF TC0+-200	09891	RK73H1J5111F

 **Indicates factory-selected value*

Agilent Part Number E4401-60059
Processor

Reference Designator	Agilent Part Number	Qty	Description	Mgr Code	Mfr Part Number
R252	0699-3964	1	RESISTOR 5.11K +-1% .063W TKF TC0+-200	09891	RK73H1J5111F
R253	0699-3964	1	RESISTOR 5.11K +-1% .063W TKF TC0+-200	09891	RK73H1J5111F
R254	0699-3964	1	RESISTOR 5.11K +-1% .063W TKF TC0+-200	09891	RK73H1J5111F
R255	0699-3964	1	RESISTOR 5.11K +-1% .063W TKF TC0+-200	09891	RK73H1J5111F
R256	0699-3964	1	RESISTOR 5.11K +-1% .063W TKF TC0+-200	09891	RK73H1J5111F
R257	0699-3964	1	RESISTOR 5.11K +-1% .063W TKF TC0+-200	09891	RK73H1J5111F
R258	0699-3918	1	RESISTOR 51.1 +-1% .063W TKF TC0+-200	00746	MCR03-F-51R1
R259	0699-3913	1	RESISTOR 31.6 +-1% .063W TKF TC0+-200	09891	RK73H1J31R6F
R260	0699-3964	1	RESISTOR 5.11K +-1% .063W TKF TC0+-200	09891	RK73H1J5111F
R261	0699-3913	1	RESISTOR 31.6 +-1% .063W TKF TC0+-200	09891	RK73H1J31R6F
R262	0699-3913	1	RESISTOR 31.6 +-1% .063W TKF TC0+-200	09891	RK73H1J31R6F
R263	0699-3913	1	RESISTOR 31.6 +-1% .063W TKF TC0+-200	09891	RK73H1J31R6F
R264	0699-3913	1	RESISTOR 31.6 +-1% .063W TKF TC0+-200	09891	RK73H1J31R6F
R265	0699-3918	1	RESISTOR 51.1 +-1% .063W TKF TC0+-200	00746	MCR03-F-51R1
R266	0699-3913	1	RESISTOR 31.6 +-1% .063W TKF TC0+-200	09891	RK73H1J31R6F
R267	0699-3913	1	RESISTOR 31.6 +-1% .063W TKF TC0+-200	09891	RK73H1J31R6F
R268	0699-3913	1	RESISTOR 31.6 +-1% .063W TKF TC0+-200	09891	RK73H1J31R6F
R269	0699-3913	1	RESISTOR 31.6 +-1% .063W TKF TC0+-200	09891	RK73H1J31R6F
R270	0699-3913	1	RESISTOR 31.6 +-1% .063W TKF TC0+-200	09891	RK73H1J31R6F
R271	0699-3913	1	RESISTOR 31.6 +-1% .063W TKF TC0+-200	09891	RK73H1J31R6F
R272	0699-3913	1	RESISTOR 31.6 +-1% .063W TKF TC0+-200	09891	RK73H1J31R6F
R273	0699-3918	1	RESISTOR 51.1 +-1% .063W TKF TC0+-200	00746	MCR03-F-51R1
R274	0699-3913	1	RESISTOR 31.6 +-1% .063W TKF TC0+-200	09891	RK73H1J31R6F
R275	0699-3913	1	RESISTOR 31.6 +-1% .063W TKF TC0+-200	09891	RK73H1J31R6F
R276	0699-3913	1	RESISTOR 31.6 +-1% .063W TKF TC0+-200	09891	RK73H1J31R6F
R277	0699-3913	1	RESISTOR 31.6 +-1% .063W TKF TC0+-200	09891	RK73H1J31R6F
R278	0699-3913	1	RESISTOR 31.6 +-1% .063W TKF TC0+-200	09891	RK73H1J31R6F
R279	0699-3913	1	RESISTOR 31.6 +-1% .063W TKF TC0+-200	09891	RK73H1J31R6F
R280	0699-3918	1	RESISTOR 51.1 +-1% .063W TKF TC0+-200	00746	MCR03-F-51R1
R281	0699-3918	1	RESISTOR 51.1 +-1% .063W TKF TC0+-200	00746	MCR03-F-51R1

**Indicates factory-selected value*

Scans by ArtekMedia => 2009

Agilent Part Number E4401-60059
Processor

Reference Designator	Agilent Part Number	Qty	Description	Mgr Code	Mfr Part Number
R282	0699-3913	1	RESISTOR 31.6 +-1% .063W TKF TC0+-200	09891	RK73H1J31R6F
R283	0699-3913	1	RESISTOR 31.6 +-1% .063W TKF TC0+-200	09891	RK73H1J31R6F
R284	0699-3913	1	RESISTOR 31.6 +-1% .063W TKF TC0+-200	09891	RK73H1J31R6F
R285	0699-3964	1	RESISTOR 5.11K +-1% .063W TKF TC0+-200	09891	RK73H1J5111F
R286	0699-3964	1	RESISTOR 5.11K +-1% .063W TKF TC0+-200	09891	RK73H1J5111F
R287	0699-3574	1	RESISTOR 0 .0625W TKF	09891	RM73Z1JT
R288	0699-3964	1	RESISTOR 5.11K +-1% .063W TKF TC0+-200	09891	RK73H1J5111F
R289	0699-3913	1	RESISTOR 31.6 +-1% .063W TKF TC0+-200	09891	RK73H1J31R6F
R290	0699-3913	1	RESISTOR 31.6 +-1% .063W TKF TC0+-200	09891	RK73H1J31R6F
R291	0699-3964	1	RESISTOR 5.11K +-1% .063W TKF TC0+-200	09891	RK73H1J5111F
R292	0699-3574	1	RESISTOR 0 .0625W TKF	09891	RM73Z1JT
R293	0699-3574	1	RESISTOR 0 .0625W TKF	09891	RM73Z1JT
R294	0699-3964	1	RESISTOR 5.11K +-1% .063W TKF TC0+-200	09891	RK73H1J5111F
R295	0699-3964	1	RESISTOR 5.11K +-1% .063W TKF TC0+-200	09891	RK73H1J5111F
R296	0699-3964	1	RESISTOR 5.11K +-1% .063W TKF TC0+-200	09891	RK73H1J5111F
R297	0699-3913	1	RESISTOR 31.6 +-1% .063W TKF TC0+-200	09891	RK73H1J31R6F
R298	0699-3964	1	RESISTOR 5.11K +-1% .063W TKF TC0+-200	09891	RK73H1J5111F
R299	0699-3964	1	RESISTOR 5.11K +-1% .063W TKF TC0+-200	09891	RK73H1J5111F
R300	0699-3574	1	RESISTOR 0 .0625W TKF	09891	RM73Z1JT
R301	0699-3964	1	RESISTOR 5.11K +-1% .063W TKF TC0+-200	09891	RK73H1J5111F
R302	0699-3964	1	RESISTOR 5.11K +-1% .063W TKF TC0+-200	09891	RK73H1J5111F
R303	0699-3574	1	RESISTOR 0 .0625W TKF	09891	RM73Z1JT
R304	0699-3970	1	RESISTOR 10K +-1% .063W TKF TC0+-200	09891	RK73H1J1002F
R305	0699-3574	1	RESISTOR 0 .0625W TKF	09891	RM73Z1JT
R306	0699-3964	1	RESISTOR 5.11K +-1% .063W TKF TC0+-200	09891	RK73H1J5111F
R307	0699-3944	1	RESISTOR 750 +-1% .063W TKF TC0+-200	09891	RK73H1J7500F
R308	0699-3970	1	RESISTOR 10K +-1% .063W TKF TC0+-200	09891	RK73H1J1002F
R309	0699-3964	1	RESISTOR 5.11K +-1% .063W TKF TC0+-200	09891	RK73H1J5111F
R310	0699-3944	1	RESISTOR 750 +-1% .063W TKF TC0+-200	09891	RK73H1J7500F
R311	0699-3964	1	RESISTOR 5.11K +-1% .063W TKF TC0+-200	09891	RK73H1J5111F

 **Indicates factory-selected value*

Agilent Part Number E4401-60059
Processor

Reference Designator	Agilent Part Number	Qty	Description	Mgr Code	Mfr Part Number
R312	0699-3944	1	RESISTOR 750 +-1% .063W TKF TC0+-200	09891	RK73H1J7500F
R313	0699-3964	1	RESISTOR 5.11K +-1% .063W TKF TC0+-200	09891	RK73H1J5111F
R314	0699-3964	1	RESISTOR 5.11K +-1% .063W TKF TC0+-200	09891	RK73H1J5111F
R315	1810-1682	1	NET-RES 8 4.7K OHM 10-PIN	00746	MNR35J5RJ472
R316	0699-3941	1	RESISTOR 511 +-1% .063W TKF TC0+-200	00746	MCR03-F-5110
R317	0699-3964	1	RESISTOR 5.11K +-1% .063W TKF TC0+-200	09891	RK73H1J5111F
R318	0699-4016	1	RESISTOR 1M +-1% .063W TKF TC0+-200	00746	MCR03-F-1004
R320	0699-3574	1	RESISTOR 0 .0625W TKF	09891	RM73Z1JT
R321	0699-3574	1	RESISTOR 0 .0625W TKF	09891	RM73Z1JT
R322	0699-3574	1	RESISTOR 0 .0625W TKF	09891	RM73Z1JT
R323	1810-1682	1	NET-RES 8 4.7K OHM 10-PIN	00746	MNR35J5RJ472
R324	0699-3574	1	RESISTOR 0 .0625W TKF	09891	RM73Z1JT
R325	0699-3574	1	RESISTOR 0 .0625W TKF	09891	RM73Z1JT
R326	0699-3574	1	RESISTOR 0 .0625W TKF	09891	RM73Z1JT
R327	0699-3574	1	RESISTOR 0 .0625W TKF	09891	RM73Z1JT
R328	0699-1419	1	RESISTOR 147 +-1% .125W TKF TC0+-100	05524	CRCW12061470F
R329	0699-1419	1	RESISTOR 147 +-1% .125W TKF TC0+-100	05524	CRCW12061470F
R330	0699-3964	1	RESISTOR 5.11K +-1% .063W TKF TC0+-200	09891	RK73H1J5111F
R331	0699-1419	1	RESISTOR 147 +-1% .125W TKF TC0+-100	05524	CRCW12061470F
R332	0699-3913	1	RESISTOR 31.6 +-1% .063W TKF TC0+-200	09891	RK73H1J31R6F
R333	0699-3913	1	RESISTOR 31.6 +-1% .063W TKF TC0+-200	09891	RK73H1J31R6F
R334	0699-4005	1	RESISTOR 316K +-1% .063W TKF TC0+-200	09891	RK73H1J3163F
R335	0699-3954	1	RESISTOR 1.96K +-1% .063W TKF TC0+-200	09891	RK73H1J1961F
R337	0699-3913	1	RESISTOR 31.6 +-1% .063W TKF TC0+-200	09891	RK73H1J31R6F
R339	0699-3964	1	RESISTOR 5.11K +-1% .063W TKF TC0+-200	09891	RK73H1J5111F
R340	0699-3964	1	RESISTOR 5.11K +-1% .063W TKF TC0+-200	09891	RK73H1J5111F
R341	0699-3913	1	RESISTOR 31.6 +-1% .063W TKF TC0+-200	09891	RK73H1J31R6F
R342	0699-3964	1	RESISTOR 5.11K +-1% .063W TKF TC0+-200	09891	RK73H1J5111F
R343	0699-3964	1	RESISTOR 5.11K +-1% .063W TKF TC0+-200	09891	RK73H1J5111F
R344	0699-3964	1	RESISTOR 5.11K +-1% .063W TKF TC0+-200	09891	RK73H1J5111F

Scans by ArtekMedia => 2009

Agilent Part Number E4401-60059
Processor

Reference Designator	Agilent Part Number	Qty	Description	Mgr Code	Mfr Part Number
R345	0699-3964	1	RESISTOR 5.11K +-1% .063W TKF TC0+-200	09891	RK73H1J5111F
R347	0699-3964	1	RESISTOR 5.11K +-1% .063W TKF TC0+-200	09891	RK73H1J5111F
R350	0699-3913	1	RESISTOR 31.6 +-1% .063W TKF TC0+-200	09891	RK73H1J31R6F
R351	0699-3913	1	RESISTOR 31.6 +-1% .063W TKF TC0+-200	09891	RK73H1J31R6F
R352	0699-3913	1	RESISTOR 31.6 +-1% .063W TKF TC0+-200	09891	RK73H1J31R6F
R353	0699-3913	1	RESISTOR 31.6 +-1% .063W TKF TC0+-200	09891	RK73H1J31R6F
R354	0699-3913	1	RESISTOR 31.6 +-1% .063W TKF TC0+-200	09891	RK73H1J31R6F
R355	0699-3913	1	RESISTOR 31.6 +-1% .063W TKF TC0+-200	09891	RK73H1J31R6F
R359	0699-3964	1	RESISTOR 5.11K +-1% .063W TKF TC0+-200	09891	RK73H1J5111F
R362	0699-3964	1	RESISTOR 5.11K +-1% .063W TKF TC0+-200	09891	RK73H1J5111F
R363	0699-3970	1	RESISTOR 10K +-1% .063W TKF TC0+-200	09891	RK73H1J1002F
R365	0699-3964	1	RESISTOR 5.11K +-1% .063W TKF TC0+-200	09891	RK73H1J5111F
R366	0699-3964	1	RESISTOR 5.11K +-1% .063W TKF TC0+-200	09891	RK73H1J5111F
R367	1810-1682	1	NET-RES 8 4.7K OHM 10-PIN	00746	MNR35J5RJ472
R368	0699-3964	1	RESISTOR 5.11K +-1% .063W TKF TC0+-200	09891	RK73H1J5111F
R369	0699-3964	1	RESISTOR 5.11K +-1% .063W TKF TC0+-200	09891	RK73H1J5111F
R370	0699-3964	1	RESISTOR 5.11K +-1% .063W TKF TC0+-200	09891	RK73H1J5111F
R371	0699-3964	1	RESISTOR 5.11K +-1% .063W TKF TC0+-200	09891	RK73H1J5111F
R372	0699-3964	1	RESISTOR 5.11K +-1% .063W TKF TC0+-200	09891	RK73H1J5111F
R373	0699-3964	1	RESISTOR 5.11K +-1% .063W TKF TC0+-200	09891	RK73H1J5111F
R374	0699-3970	1	RESISTOR 10K +-1% .063W TKF TC0+-200	09891	RK73H1J1002F
R375	0699-3970	1	RESISTOR 10K +-1% .063W TKF TC0+-200	09891	RK73H1J1002F
R376	0699-3970	1	RESISTOR 10K +-1% .063W TKF TC0+-200	09891	RK73H1J1002F
R377	0699-3964	1	RESISTOR 5.11K +-1% .063W TKF TC0+-200	09891	RK73H1J5111F
R378	0699-3970	1	RESISTOR 10K +-1% .063W TKF TC0+-200	09891	RK73H1J1002F
R379	0699-3913	1	RESISTOR 31.6 +-1% .063W TKF TC0+-200	09891	RK73H1J31R6F
R380	0699-3964	1	RESISTOR 5.11K +-1% .063W TKF TC0+-200	09891	RK73H1J5111F
R381	0699-3913	1	RESISTOR 31.6 +-1% .063W TKF TC0+-200	09891	RK73H1J31R6F
R382	0699-3913	1	RESISTOR 31.6 +-1% .063W TKF TC0+-200	09891	RK73H1J31R6F
R383	0699-3913	1	RESISTOR 31.6 +-1% .063W TKF TC0+-200	09891	RK73H1J31R6F

 **Indicates factory-selected value*

Agilent Part Number E4401-60059
Processor

Reference Designator	Agilent Part Number	Qty	Description	Mgr Code	Mfr Part Number
R384	0699-3954	1	RESISTOR 1.96K +-1% .063W TKF TC0+-200	09891	RK73H1J1961F
R385	0699-3954	1	RESISTOR 1.96K +-1% .063W TKF TC0+-200	09891	RK73H1J1961F
R386	0699-3954	1	RESISTOR 1.96K +-1% .063W TKF TC0+-200	09891	RK73H1J1961F
R387	0699-3913	1	RESISTOR 31.6 +-1% .063W TKF TC0+-200	09891	RK73H1J31R6F
R388	0699-3913	1	RESISTOR 31.6 +-1% .063W TKF TC0+-200	09891	RK73H1J31R6F
R389	0699-3913	1	RESISTOR 31.6 +-1% .063W TKF TC0+-200	09891	RK73H1J31R6F
R390	0699-3954	1	RESISTOR 1.96K +-1% .063W TKF TC0+-200	09891	RK73H1J1961F
R391	0699-3954	1	RESISTOR 1.96K +-1% .063W TKF TC0+-200	09891	RK73H1J1961F
R392	0699-3913	1	RESISTOR 31.6 +-1% .063W TKF TC0+-200	09891	RK73H1J31R6F
R393	0699-3913	1	RESISTOR 31.6 +-1% .063W TKF TC0+-200	09891	RK73H1J31R6F
R394	0699-3954	1	RESISTOR 1.96K +-1% .063W TKF TC0+-200	09891	RK73H1J1961F
R395	0699-3954	1	RESISTOR 1.96K +-1% .063W TKF TC0+-200	09891	RK73H1J1961F
R396	0699-3913	1	RESISTOR 31.6 +-1% .063W TKF TC0+-200	09891	RK73H1J31R6F
R397	0699-3913	1	RESISTOR 31.6 +-1% .063W TKF TC0+-200	09891	RK73H1J31R6F
R398	0699-3964	1	RESISTOR 5.11K +-1% .063W TKF TC0+-200	09891	RK73H1J5111F
R399	0699-3964	1	RESISTOR 5.11K +-1% .063W TKF TC0+-200	09891	RK73H1J5111F
R400	1810-1682	1	NET-RES 8 4.7K OHM 10-PIN	00746	MNR35J5RJ472
R401	0699-3964	1	RESISTOR 5.11K +-1% .063W TKF TC0+-200	09891	RK73H1J5111F
R402	0699-3964	1	RESISTOR 5.11K +-1% .063W TKF TC0+-200	09891	RK73H1J5111F
R403	1810-1682	1	NET-RES 8 4.7K OHM 10-PIN	00746	MNR35J5RJ472
R404	0699-3964	1	RESISTOR 5.11K +-1% .063W TKF TC0+-200	09891	RK73H1J5111F
R405	1810-1581	1	NET-RES 4 33.0 OHM 8-PIN	00746	MNR34K5AWJ330
R406	0699-3964	1	RESISTOR 5.11K +-1% .063W TKF TC0+-200	09891	RK73H1J5111F
R407	0699-3970	1	RESISTOR 10K +-1% .063W TKF TC0+-200	09891	RK73H1J1002F
R408	1810-1581	1	NET-RES 4 33.0 OHM 8-PIN	00746	MNR34K5AWJ330
R409	1810-1581	1	NET-RES 4 33.0 OHM 8-PIN	00746	MNR34K5AWJ330
R410	0699-3913	1	RESISTOR 31.6 +-1% .063W TKF TC0+-200	09891	RK73H1J31R6F
R411	0699-3964	1	RESISTOR 5.11K +-1% .063W TKF TC0+-200	09891	RK73H1J5111F
R412	0699-3947	1	RESISTOR 1K +-1% .063W TKF TC0+-200	00746	MCR03-F-1001
R413	1810-1578	1	NET-RES 4 1.0K OHM 8-PIN	00746	MNR34K5ABJ102

**Indicates factory-selected value*

Scans by ArtekMedia => 2009

Agilent Part Number E4401-60059
Processor

Reference Designator	Agilent Part Number	Qty	Description	Mgr Code	Mfr Part Number
R414	1810-1578	1	NET-RES 4 1.0K OHM 8-PIN	00746	MNR34K5ABJ102
R415	0699-4000	1	RESISTOR 196K +-1% .063W TKF TC0+-200	09891	RK73H1J1963F
R416	0699-4000	1	RESISTOR 196K +-1% .063W TKF TC0+-200	09891	RK73H1J1963F
R417	0699-3947	1	RESISTOR 1K +-1% .063W TKF TC0+-200	00746	MCR03-F-1001
R418	0699-3947	1	RESISTOR 1K +-1% .063W TKF TC0+-200	00746	MCR03-F-1001
R419	0699-3913	1	RESISTOR 31.6 +-1% .063W TKF TC0+-200	09891	RK73H1J31R6F
R420	0699-3913	1	RESISTOR 31.6 +-1% .063W TKF TC0+-200	09891	RK73H1J31R6F
R421	0699-3913	1	RESISTOR 31.6 +-1% .063W TKF TC0+-200	09891	RK73H1J31R6F
R422	0699-3964	1	RESISTOR 5.11K +-1% .063W TKF TC0+-200	09891	RK73H1J5111F
R423	1810-1682	1	NET-RES 8 4.7K OHM 10-PIN	00746	MNR35J5RJ472
R424	0699-3920	1	RESISTOR 68.1 +-1% .063W TKF TC0+-200	09891	RK73H1J68R1F
R425	0699-3924	1	RESISTOR 100 +-1% .063W TKF TC0+-200	00746	MCR03-F-1000
R426	0699-3924	1	RESISTOR 100 +-1% .063W TKF TC0+-200	00746	MCR03-F-1000
R427	0699-3924	1	RESISTOR 100 +-1% .063W TKF TC0+-200	00746	MCR03-F-1000
R428	0699-3924	1	RESISTOR 100 +-1% .063W TKF TC0+-200	00746	MCR03-F-1000
R429	0699-3924	1	RESISTOR 100 +-1% .063W TKF TC0+-200	00746	MCR03-F-1000
R430	0699-3924	1	RESISTOR 100 +-1% .063W TKF TC0+-200	00746	MCR03-F-1000
R431	0699-3924	1	RESISTOR 100 +-1% .063W TKF TC0+-200	00746	MCR03-F-1000
R432	0699-3924	1	RESISTOR 100 +-1% .063W TKF TC0+-200	00746	MCR03-F-1000
R433	0699-3924	1	RESISTOR 100 +-1% .063W TKF TC0+-200	00746	MCR03-F-1000
R434	0699-3924	1	RESISTOR 100 +-1% .063W TKF TC0+-200	00746	MCR03-F-1000
R435	0699-3924	1	RESISTOR 100 +-1% .063W TKF TC0+-200	00746	MCR03-F-1000
R436	0699-3924	1	RESISTOR 100 +-1% .063W TKF TC0+-200	00746	MCR03-F-1000
R437	0699-3924	1	RESISTOR 100 +-1% .063W TKF TC0+-200	00746	MCR03-F-1000
R438	0699-3924	1	RESISTOR 100 +-1% .063W TKF TC0+-200	00746	MCR03-F-1000
R439	0699-3924	1	RESISTOR 100 +-1% .063W TKF TC0+-200	00746	MCR03-F-1000
R500	0699-3947	1	RESISTOR 1K +-1% .063W TKF TC0+-200	00746	MCR03-F-1001
R501	0699-3913	1	RESISTOR 31.6 +-1% .063W TKF TC0+-200	09891	RK73H1J31R6F
R502	0699-3913	1	RESISTOR 31.6 +-1% .063W TKF TC0+-200	09891	RK73H1J31R6F
R503	0699-3964	1	RESISTOR 5.11K +-1% .063W TKF TC0+-200	09891	RK73H1J5111F

 **Indicates factory-selected value*

Agilent Part Number E4401-60059
Processor

Reference Designator	Agilent Part Number	Qty	Description	Mgr Code	Mfr Part Number
R504	0699-3964	1	RESISTOR 5.11K +-1% .063W TKF TC0+-200	09891	RK73H1J5111F
R505	0699-3913	1	RESISTOR 31.6 +-1% .063W TKF TC0+-200	09891	RK73H1J31R6F
R506	0699-3964	1	RESISTOR 5.11K +-1% .063W TKF TC0+-200	09891	RK73H1J5111F
R507	0699-3964	1	RESISTOR 5.11K +-1% .063W TKF TC0+-200	09891	RK73H1J5111F
R508	0699-3970	1	RESISTOR 10K +-1% .063W TKF TC0+-200	09891	RK73H1J1002F
R510	0699-3574	1	RESISTOR 0 .0625W TKF	09891	RM73Z1JT
R512	0699-3970	1	RESISTOR 10K +-1% .063W TKF TC0+-200	09891	RK73H1J1002F
R513	0699-3964	1	RESISTOR 5.11K +-1% .063W TKF TC0+-200	09891	RK73H1J5111F
R514	0699-3964	1	RESISTOR 5.11K +-1% .063W TKF TC0+-200	09891	RK73H1J5111F
R515	0699-3964	1	RESISTOR 5.11K +-1% .063W TKF TC0+-200	09891	RK73H1J5111F
R516	0699-3964	1	RESISTOR 5.11K +-1% .063W TKF TC0+-200	09891	RK73H1J5111F
R517	0699-3964	1	RESISTOR 5.11K +-1% .063W TKF TC0+-200	09891	RK73H1J5111F
R518	0699-3929	1	RESISTOR 162 +-1% .063W TKF TC0+-200	09891	RK73H1J1620F
R519	0699-3929	1	RESISTOR 162 +-1% .063W TKF TC0+-200	09891	RK73H1J1620F
R520	0699-3929	1	RESISTOR 162 +-1% .063W TKF TC0+-200	09891	RK73H1J1620F
R521	0699-3929	1	RESISTOR 162 +-1% .063W TKF TC0+-200	09891	RK73H1J1620F
R522	0699-3929	1	RESISTOR 162 +-1% .063W TKF TC0+-200	09891	RK73H1J1620F
R523	0699-3929	1	RESISTOR 162 +-1% .063W TKF TC0+-200	09891	RK73H1J1620F
S1	3101-2935	1	SWITCH-DIP SURF-MT-SL SPST 0.05A 6VDC	02483	219-8LPST
U1	1826-1950	1	IC COMPARATOR HS SINGLE 8 PIN PLSTC-SOIC	10858	LT1016CS8
U2	1826-1950	1	IC COMPARATOR HS SINGLE 8 PIN PLSTC-SOIC	10858	LT1016CS8
U3	1820-8927	1	IC DRVR BICMOS/ABT LINE 16-BIT	02910	74ABT16244ADL
U4	1820-8927	1	IC DRVR BICMOS/ABT LINE 16-BIT	02910	74ABT16244ADL
U5	1826-2290	1	IC MISC SINGLE 8 PIN PLSTC-SOIC	01698	TL7705BCD
U6	1813-0794	1	CLK-OSC-XTAL STD 14.31818-MHZ 0.01%	07919	1813-0794
U7	1826-2567	1	IC PWR MGT-V-REG-ADJ-POS 4 PINS TO-261AA	10858	LT1117CST
U8	1826-2961	1	IC OP AMP GP SINGLE 8 PIN PLSTC-SOIC	03285	AD817AR
U9	1826-4193	1	ANALOG MULTIPLEXER 8 -P-SOIC	03285	AD8180AR

**Indicates factory-selected value*

Scans by ArtekMedia => 2009

Agilent Part Number E4401-60059
Processor

Reference Designator	Agilent Part Number	Qty	Description	Mgr Code	Mfr Part Number
U10	1826-2961	1	IC OP AMP GP SINGLE 8 PIN PLSTC-SOIC	03285	AD817AR
U11	1826-2961	1	IC OP AMP GP SINGLE 8 PIN PLSTC-SOIC	03285	AD817AR
U12	1826-2147	1	ANALOG MULTIPLEXER 8 CHNL 16 -P-SOIC	05524	DG408DY
U13	1826-2961	1	IC OP AMP GP SINGLE 8 PIN PLSTC-SOIC	03285	AD817AR
U14	1826-2147	1	ANALOG MULTIPLEXER 8 CHNL 16 -P-SOIC	05524	DG408DY
U15	1826-1622	1	IC OP AMP LOW-BIAS-H-IMPD QUAD 14 PIN	01698	TL074CD
U16	1826-2802	1	IC WIDEBAND AMPL GM SINGLE 14 PIN	11302	MAX436CSD
U17	1826-2330	1	IC OP AMP PRCN SINGLE 8 PIN PLSTC-SOIC	10858	LT1097S8
U18	1826-2786	1	IC OP AMP VID-SPCL-FCTN SINGLE 8 PIN	03285	AD810AR
U19	1820-5940	1	IC GATE CMOS/ACT AND QUAD 2-INP	02237	74ACT08SCX.
U20	1820-5944	1	IC GATE CMOS/ACT OR QUAD 2-INP	02237	74ACT32SCX.
U21	1820-8830	1	IC MUXR/DATA-SEL CMOS/ACT 8-TO-1-LINE	02237	74ACT251SCX
U22	1820-5944	1	IC GATE CMOS/ACT OR QUAD 2-INP	02237	74ACT32SCX.
U23	1820-8927	1	IC DRVR BICMOS/ABT LINE 16-BIT	02910	74ABT16244ADL
U24	1821-3812	1	IC-INTEGER-ONLY VERSION OF MC68040	02037	MC68LC040RC25A
U25	1820-8928	1	IC TRANSCEIVER BICMOS/ABT BUS DUAL 8-BIT	01698	SN74ABT16245ADL
U26	1820-6473	1	IC FF CMOS/ACT D-TYPE POS-EDGE-TRIG	01698	SN74ACT74D
U27	1813-0712	1	CLK-OSC-XTAL STD 50.0-MHZ 0.01%	12768	SG-615PH50.000MC
U28	1820-8770	1	IC BFR CMOS/ACT NON-INV QUAD	02237	74ACT125SCX.
U29	1821-1688	1	IC-QUICC LAN INTERFACE	02037	MC68EN360EM25K
U30	1820-5939	1	IC INV CMOS/ACT HEX	02237	74ACT04SCX.
U31	1818-5728	1	DRAM 256KX16 70 NS SOJ FST-PG-M 5V	06347	HM514260CJ-7
U32	1818-5728	1	DRAM 256KX16 70 NS SOJ FST-PG-M 5V	06347	HM514260CJ-7
U33	E4401-50001	1	IC 90C24 S VGA	28480	E4401-50001
U34	1820-8927	1	IC DRVR BICMOS/ABT LINE 16-BIT	02910	74ABT16244ADL
U35	1826-1746	1	IC PWR MGT-V-REF-FXD 1.205/1.26V 8 PINS	10858	LM385S8-1.2
U36	1820-5940	1	IC GATE CMOS/ACT AND QUAD 2-INP	02237	74ACT08SCX.
U37	1826-1528	1	IC COMPARATOR LP QUAD 14 PIN PLSTC-SOIC	03406	LM339M

 **Indicates factory-selected value*

Agilent Part Number E4401-60059
Processor

Reference Designator	Agilent Part Number	Qty	Description	Mgr Code	Mfr Part Number
U38	1821-0299	1	IC FF BICMOS/ABT D-TYPE POS-EDGE-TRIG	01698	74ABT273DW
U39	1821-0055	1	IC SCHMITT-TRIG CMOS/ACT NAND QUAD 2-INP	36633	MC74ACT132D
U40	1826-1528	1	IC COMPARATOR LP QUAD 14 PIN PLSTC-SOIC	03406	LM339M
U41	1821-0299	1	IC FF BICMOS/ABT D-TYPE POS-EDGE-TRIG	01698	74ABT273DW
U42	1826-4209	1	A/D 16-BIT 28-P-SOIC	10858	LTC1605CSW
U43	1821-0559	1	IC FF BICMOS/ABT D-TYPE POS-EDGE-TRIG	01698	SN74ABT16374ADL
U44	1826-2981	1	IC OP AMP PRCN DUAL 8 PIN PLSTC-SOIC	10858	LT1124CS8
U45	1826-2802	1	IC WIDEBAND AMPL GM SINGLE 14 PIN	11302	MAX436CSD
U46	1820-6473	1	IC FF CMOS/ACT D-TYPE POS-EDGE-TRIG	01698	SN74ACT74D
U47	1826-2330	1	IC OP AMP PRCN SINGLE 8 PIN PLSTC-SOIC	10858	LT1097S8
U49	1826-2786	1	IC OP AMP VID-SPCL-FCTN SINGLE 8 PIN	03285	AD810AR
U50	1820-5940	1	IC GATE CMOS/ACT AND QUAD 2-INP	02237	74ACT08SCX.
U51	1820-7796	1	IC DRVR BICMOS/ABT LINE OCTL	02910	74ABT244D
U52	1821-1336	1	IC DRVR CMOS CLK 1-INP	03406	CGS74CT2524M
U53	1821-1185	1	IC-DYNAMIC READ/WRITE BUS SIZER	02037	MC68150FN33
U54	1820-5944	1	IC GATE CMOS/ACT OR QUAD 2-INP	02237	74ACT32SCX.
U55	E4401-80068	1	PAL	28480	E4401-80068
U56	E4401-80082	1		28480	E4401-80082
U57	1820-8927	1	IC DRVR BICMOS/ABT LINE 16-BIT	02910	74ABT16244ADL
U58	1818-7033	1	IC 256K-BIT SRAM 70-NS CMOS	04078	M48T35Y-70MH-1
U59	1821-3455	1	IC-UNIV PRPHL INTFC;KEYBOARD CONTROL-LER	03811	N80C42 R7115
U60	1820-8830	1	IC MUXR/DATA-SEL CMOS/ACT 8-TO-1-LINE	02237	74ACT251SCX
U61	1820-8830	1	IC MUXR/DATA-SEL CMOS/ACT 8-TO-1-LINE	02237	74ACT251SCX
U62	1821-0055	1	IC SCHMITT-TRIG CMOS/ACT NAND QUAD 2-INP	36633	MC74ACT132D
U63	1820-8769	1	IC-INTERFACE DRVR/RCVR BIPOLAR DUAL	11302	MAX232ACWE
U64	1820-7796	1	IC DRVR BICMOS/ABT LINE OCTL	02910	74ABT244D
U65	1826-1862	1	IC OP AMP LOW-BIAS-H-IMPD DUAL 8 PIN	04078	TL072CD

**Indicates factory-selected value*

Scans by ArtekMedia => 2009

5300 D-E4401-60059-2

SYM	REVISIONS	APPROVED	DATE
A	AS ISSUED PER LCN53-E4401-300 /C0		
B	REVISED PER PCO 53-13165 /SB		

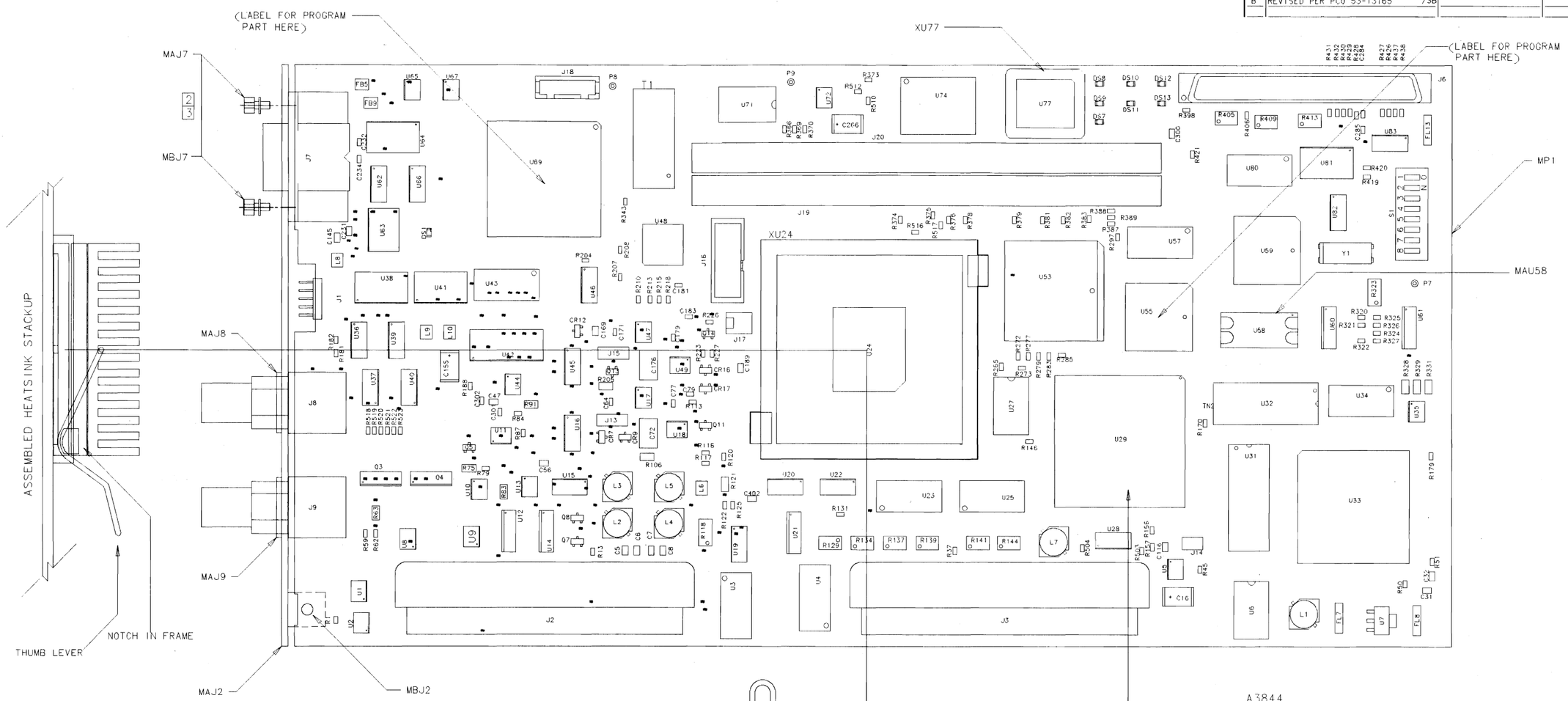

A3844

NOTES: UNLESS OTHERWISE SPECIFIED

1 USE RAW BOARD E4401-20059

2 USE LOCK WASHER ONLY; DO NOT INSTALL FLAT WASHER ON MAJ7 AND MBJ7

3 USE THREAD LOCKER(0470-0532) ON MAJ7 AND MBJ7 AND TORQUE PER TORQUE MATRIX.

4 ASSEMBLY HEATSINK AS FOLLOWS:
- A. CLEAN TOP SURFACE OF U24.
- B. REMOVE BACKING FROM HEATSINK (MAU24).
- C. USING ORIENTATION SHOWN IN DIAGRAM, PLACE HEATSINK ON TOP OF U24.
- D. PUT SPRING (MCU24) ON TOP OF HEATSINK THROUGH MIDDLE GAP OF HEATSINK FINS.
- E. HOOK LEG OF SPRING WITHOUT THUMB LEVER UNDER NOTCH IN FRAME NEAR TOP OF BOARD.
- F. USING THUMB LEVER, PUSH OTHER LEG OF SPRING UNDER NOTCH IN FRAME NEAR BOTTOM OF BOARD.
- G. WHEN DONE THE STACKUP SHOULD LOOK LIKE THE DRAWING ABOVE.
- H. MAKE SURE THAT HEATSINK SITS FLAT ON U24 AND NOT PROPPED UP BY OVERHANGING LIP OF HEATSINK

5 PART NUMBER 9135-0461(FL1-FL13) MUST NOT BE EXPOSED TO HALIDE-CONTAINING ACID FLUXES

6 GLUE THE FOUR CORNERS OF U29 (68360)

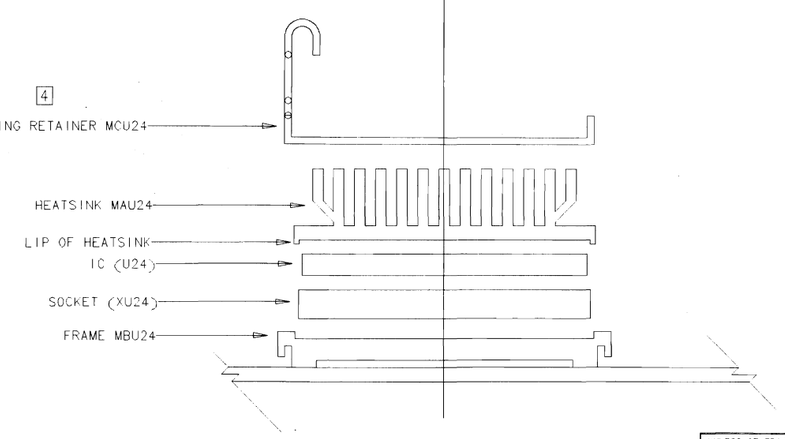

6

TORQUE MATRIX	
REF DES	TORQUE VALUE
MAJ7	0 IN-LBS
MBJ7	6 IN-LBS
MAJ8	20 IN-LBS
MAJ9	20 IN-LBS
MBJ2	5 IN-LBS

TOP SIDE

SEE MATERIAL LIST E4401-60059

HP PROPRIETARY
THIS DOCUMENT CONTAINS CONFIDENTIAL, PROPRIETARY INFORMATION THAT IS HEWLETT-PACKARD (HP) PROPERTY. DO NOT DISCLOSE TO OR DUPLICATE FOR OTHERS EXCEPT AS AUTHORIZED BY HP

UNLESS OTHERWISE SPECIFIED, DIMENSIONS ARE IN INCHES.
TOLERANCES: XX.XXX .010 XX.XX .02
THIRD ANGLE PROJECTION
DO NOT SCALE THIS DRAWING

DRAWN BY | DATE
ENGINEER/CHECKER | DATE
RELEASE TO PROD. | DATE
SUPERSEDES DWG.

ASSEMBLY, PWA PROCESSOR
TITLE

MENTOR FILENAME
SCALE NONE
SHEET 1 OF 2
E4401-60059 PART NUMBER
HEWLETT PACKARD
D-E4401-60059-2

5300 D-E4401-60059-2

SYM	REVISIONS	APPROVED	DATE
A	AS ISSUED PER LCN53-E4401-300		
B	REVISED PER PCO 53-13165		

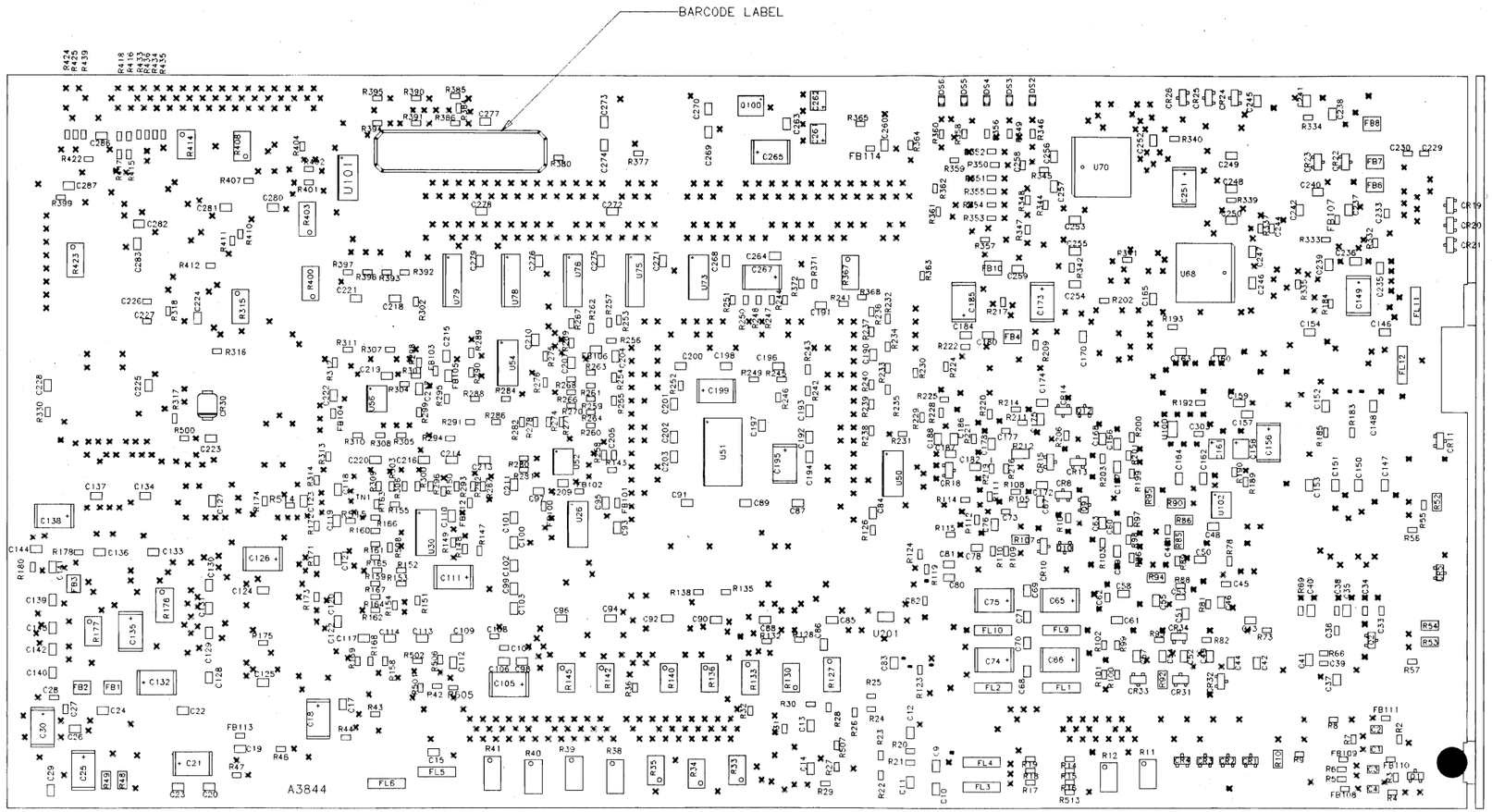

BOTTOM SIDE

HP PROPRIETARY
THIS DOCUMENT CONTAINS CONFIDENTIAL, PROPRIETARY INFORMATION THAT IS HEWLETT-PACKARD (HP) PROPERTY. DO NOT DISCLOSE TO OR DUPLICATE FOR OTHERS EXCEPT AS AUTHORIZED BY HP.

UNLESS OTHERWISE SPECIFIED, DIMENSIONS ARE IN INCHES
TOLERANCES: XX.XXX .010 XX.XX .02
THIRD ANGLE PROJECTION
DO NOT SCALE THIS DRAWING

DRAWN BY | DATE
ENGINEER/CHECKER | DATE
RELEASE TO PROD. | DATE
SUPERSEDES DWG.

TITLE: ASSEMBLY, PWA PROCESSOR

MENTOR FILENAME
SCALE NONE
SHEET 2 OF 2
HEWLETT PACKARD
E4401-60059 PART NUMBER
D-E4401-60059-2

Scans by ArtekMedia => 2009

c

D-E4401-60059-1

REV	INFORMATION	APPROVED	DATE
A	AS ISSUED PER LCN53-E4401-300		
B	MATLIST CHGS PER PCO53-13165		
C	CHANGED PER PCO 53-13294 /RS		
D	PER PCO 53-13231 IS	G. KORELICH	04-26-99

Sheet 1 - Index & Block Diagram

Sheet 2
(2A)- DRAM ADDRESS BUS
(2B)- CPU
(2C)- CONTROL
(2D)- ADDRESS BUFFERS
(2E)- DRAM SIMM MEMORY MODULE
(2F)- DYNAMIC BUS SIZER
(2G)- BOOT FLASH
(2H)- MAIN FLASH MEMORY
(2I)- I/O DATA BUFFER
(2J)- FLASH SIMM MEMORY MODULE

Sheet 3
(3A)- INPUT MUX A & VIDEO FILTERS
(3B)- AUDIO SIGNALS
(3C)- MUX & VIDEO FILTER LATCHES
(3D)- REFERENCE VOLTAGES
(3E)- TEMPERATURE SENSOR
(3F)- MUX B & VIDEO GAIN
(3G)- ANALOG TO DIGITAL CONVERTER
(3H)- A/D & IF-COUNT TIMER
(3I)- UNIPOLAR/BIPOLAR CONTROL

Sheet 4
(4A)- SRAM & REAL TIME CLOCK
(4B)- RESET CIRCUITRY
(4C)- GATE, HSWP, & MISC CIRCUITRY
(4D)- MAIN POWER SUPPLY FILTERS
(4E)- FLASH VPP SUPPLY
(4F)- IF-COUNT SIGNAL CONDITIONING
(4G)- FRONT PANEL POWER SUPPLY FILTERS
(4H)- FRONT PANEL RPG INTERFACE

Sheet 5
(5A)- SERIAL BUS INTERFACE & EEPROM
(5B)- LAN TRANSCEIVER CLOCK
(5C)- LAN TRANSCEIVER
(5D)- LAN LEDS
(5E)- LAN INTERFACE MODULE
(5F)- AT-KEYBOARD INTERFACE
(5G)- FRONT-PANEL KEYBOARD INTERFACE
(5H)- I/O CONTROL BUFFERING

Sheet 6
(6A)- POSITIVE PEAK DETECTOR
(6B)- PULL-UP & SERIES RESISTORS
(6C)- NEGATIVE PEAK DETECTOR
(6D)- PEAK DETECTOR RESETS

Sheet 7
(7A)- PROCESSOR ID, MOTHERBOARD ID, & DISPLAY ID
(7B)- CONFIG SWITCH
(7C)- RS-232 BUFFER
(7D)- I/O INTERRUPT CONDITIONING
(7E)- LED INDICATORS
(7F)- PRESET GATE
(7G)- CLOCK DISTRIBUTION
(7H)- LSRO BUFFER

Sheet 8
(8A)- RS-232 CONNECTOR
(8B)- ANALOG CARDCAGE & I/O INTERFACE CONNECTORS
(8C)- FRONT PANEL CONNECTOR
(8D)- VGA CONNECTOR
(8E)- GND TESTPOINTS
(8F)- MISC MECHANICAL
(8G)- PAL J-TAG CONNECTOR
(8H)- FAN CONNECTOR
(8I)- SPARE PARTS
(8J)- CONNECTOR LIST

Sheet 9
(9A)- DISPLAY CLOCK
(9B)- LCD DISPLAY CONTROLLER
(9C)- VIDEO MEMORY
(9D)- POWER-UP INIT
(9E)- DISPLAY DRIVER POWER SUPPLY FILTERING
(9F)- DISPLAY VOLTAGE REFERENCE
(9G)- CRT RGB SIGNALS
(9H)- LCD BUFFER & IMPEDERS
(9I)- CRT SYNC SIGNALS

BLOCK DIAGRAM

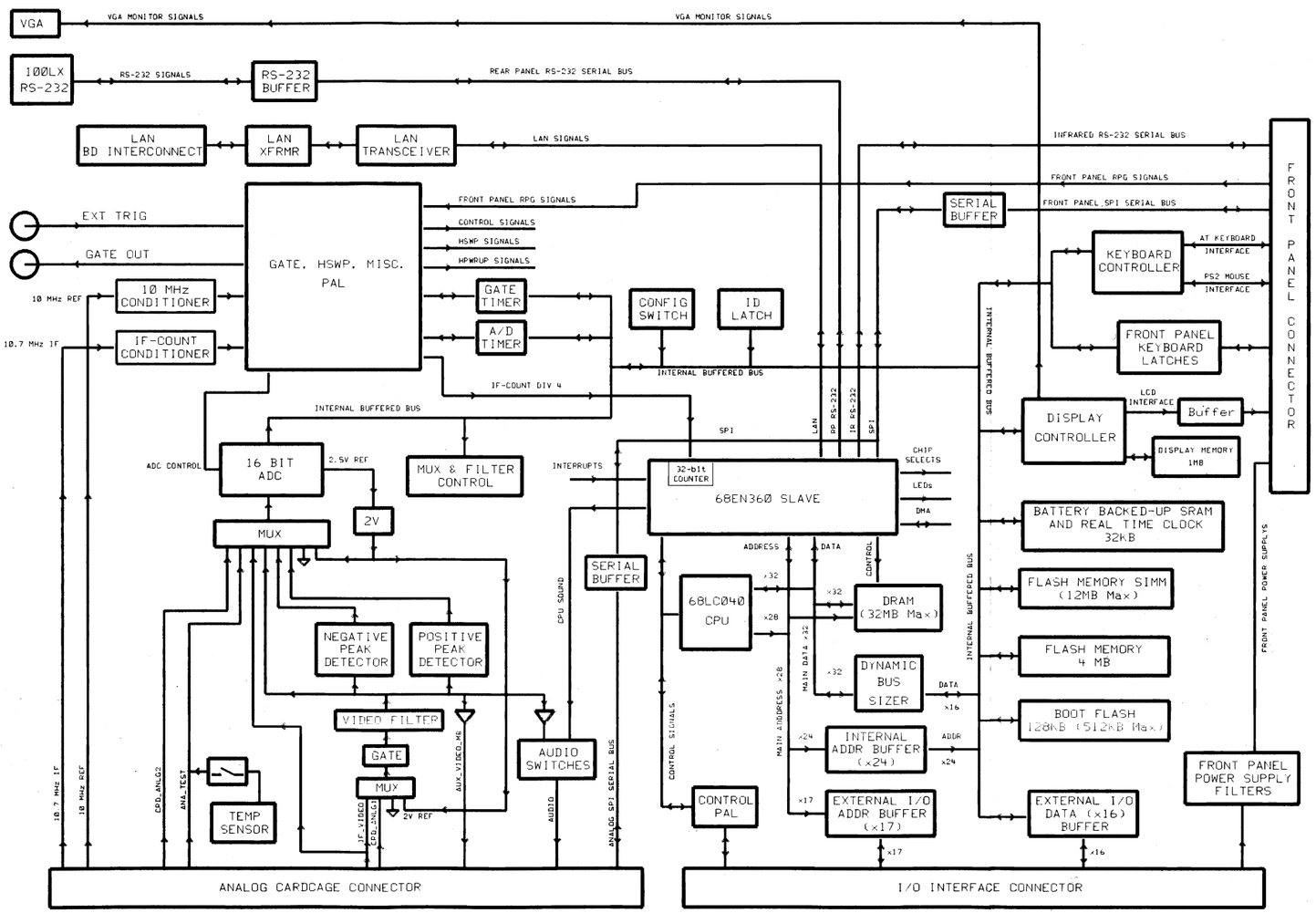

HP RESTRICTED
THIS DOCUMENT CONTAINS CONFIDENTIAL, PROPRIETARY INFORMATION THAT IS HEWLETT-PACKARD (HP) PROPERTY. DO NOT DISCLOSE TO OR DUPLICATE FOR OTHERS EXCEPT AS AUTHORIZED BY HP.

LAST CHECKED	DATE	SCHEMATIC, PWA Processor Circuit Roadmap & Index	HEWLETT PACKARD 5100
ENGINEER	SHEET 1 OF 9	TITLE	
DRAWN BY	SIZE D	PATHNAME #HP_EVH01/60059/DA3844/proc_top sheet1	PART NUMBER E4401-60059
	DA3844 ASSY REV	A3844 MAIN REV	PAGE 1 OF 18	D-E4401-60059-1 DWG NO

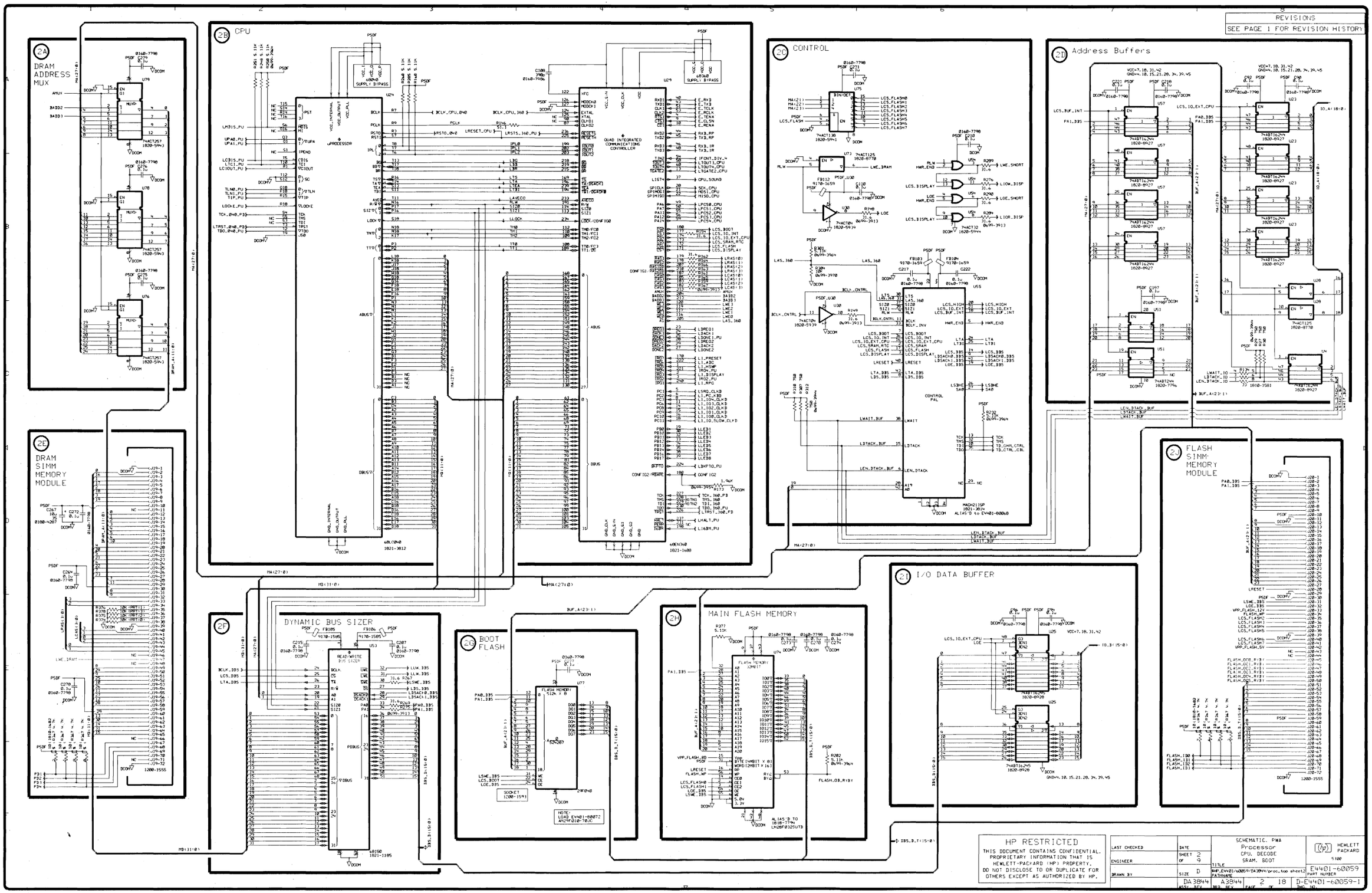

Scans by ArtekMedia => 2009

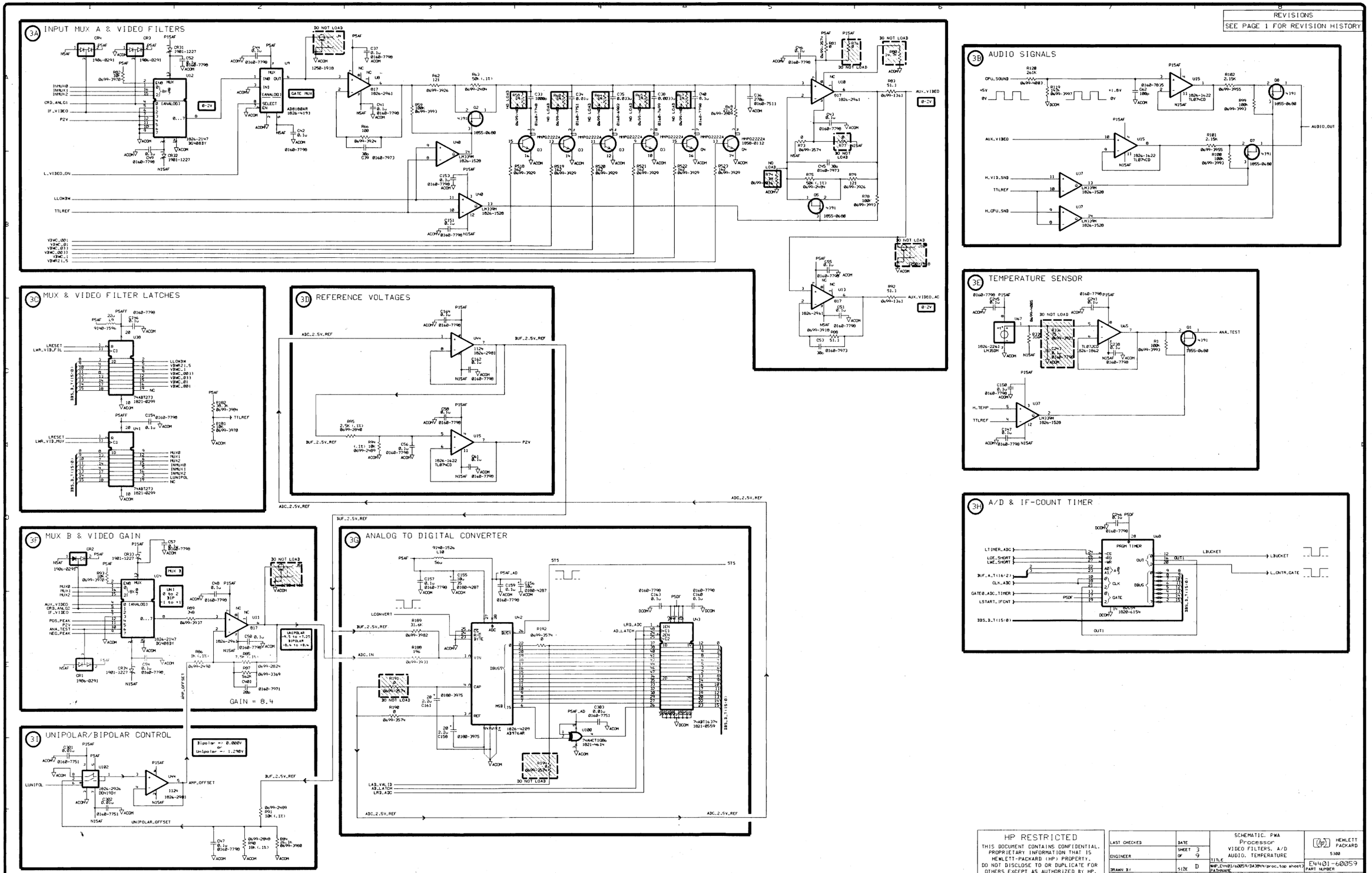
REVISIONS
SEE PAGE 1 FOR REVISION HISTORY
3A INPUT MUX A & VIDEO FILTERS
3B AUDIO SIGNALS
3C MUX & VIDEO FILTER LATCHES
3D REFERENCE VOLTAGES
3E TEMPERATURE SENSOR
3F MUX B & VIDEO GAIN
GAIN = 8.4
3G ANALOG TO DIGITAL CONVERTER
3H A/D & IF-COUNT TIMER
3I UNIPOLAR/BIPOLAR CONTROL
Bipolar +/- 0.000V
Unipolar +/- 1.298V
DO NOT LOAD
GATE MUX
AUDIO_OUT
AUX_VIDEO
ANA_TEST
LBUCKET
L_CNTR_GATE
ADC_2.5V_REF
BUF_2.5V_REF
AMP_OFFSET
UNIPOLAR_OFFSET
HP RESTRICTED
THIS DOCUMENT CONTAINS CONFIDENTIAL, PROPRIETARY INFORMATION THAT IS HEWLETT-PACKARD (HP) PROPERTY. DO NOT DISCLOSE TO OR DUPLICATE FOR OTHERS EXCEPT AS AUTHORIZED BY HP.
LAST CHECKED
ENGINEER
DRAWN BY
DATE
SHEET 3 OF 9
SIZE D
SCHEMATIC, PWA
Processor
VIDEO FILTERS, A/D
AUDIO, TEMPERATURE
HEWLETT PACKARD
5180
E4401-60059
PART NUMBER
DA3844
ASSY. REV.
A3844
3 18
D-E4401-60059-1

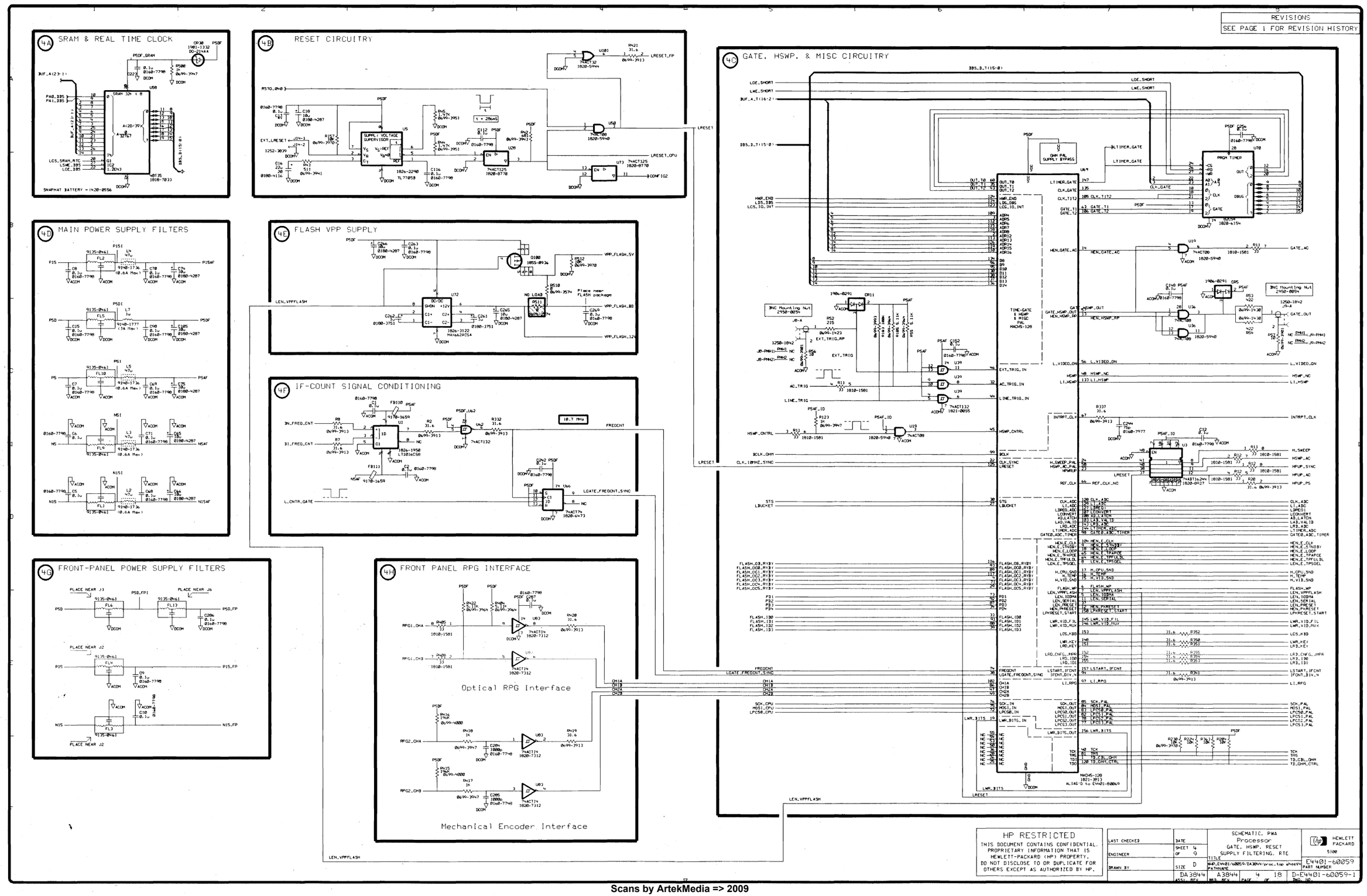

Scans by ArtekMedia => 2009

c

REVISIONS
SEE PAGE 1 FOR REVISION HISTORY

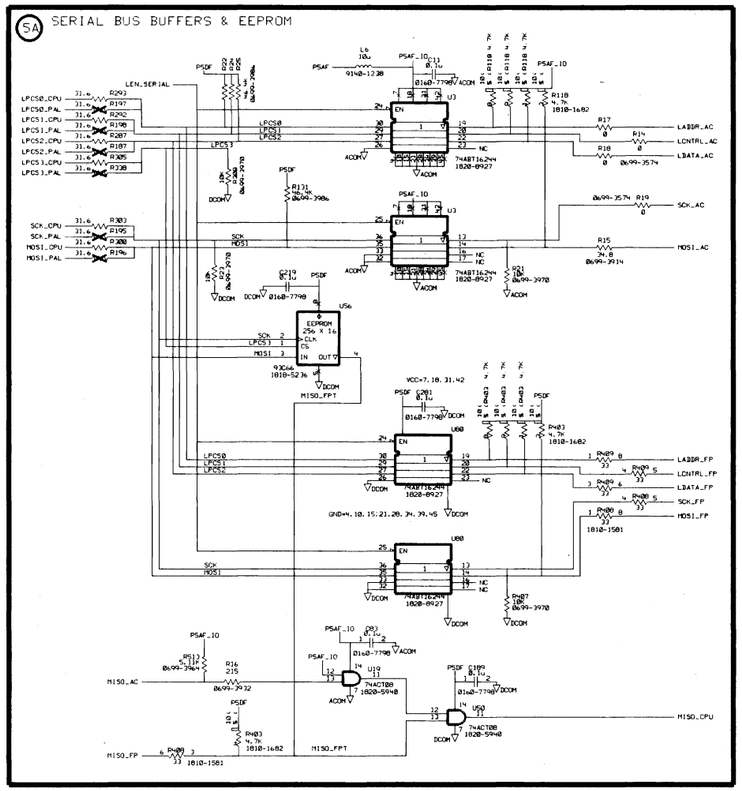

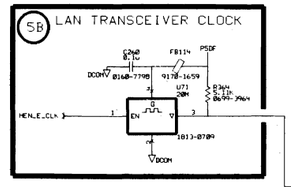

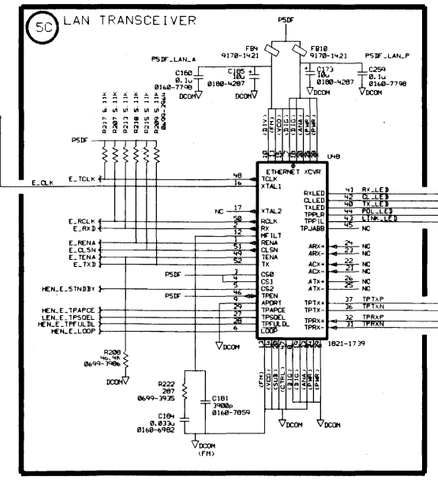

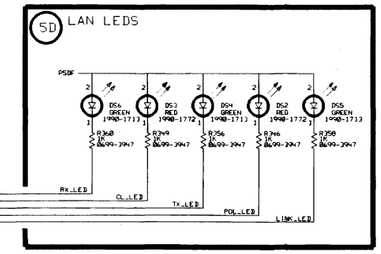

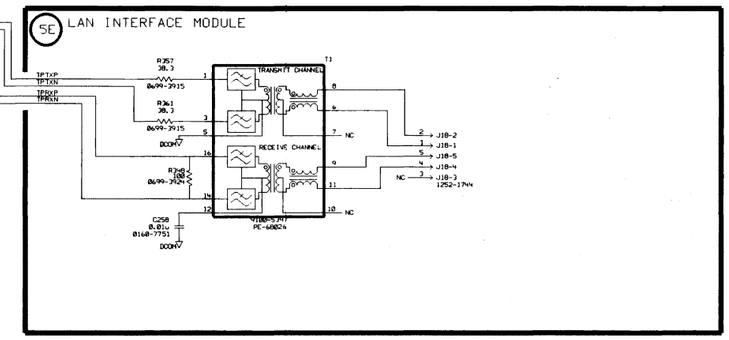

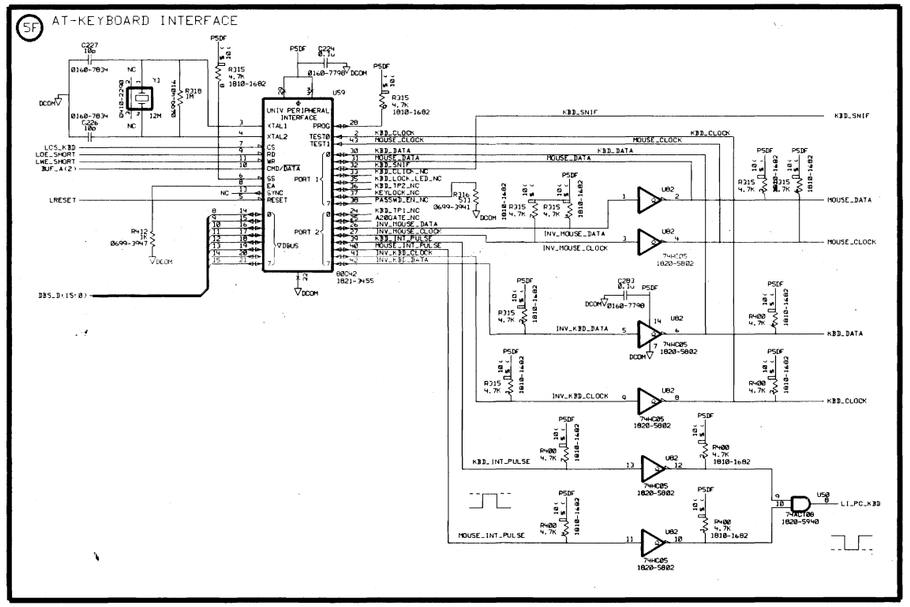

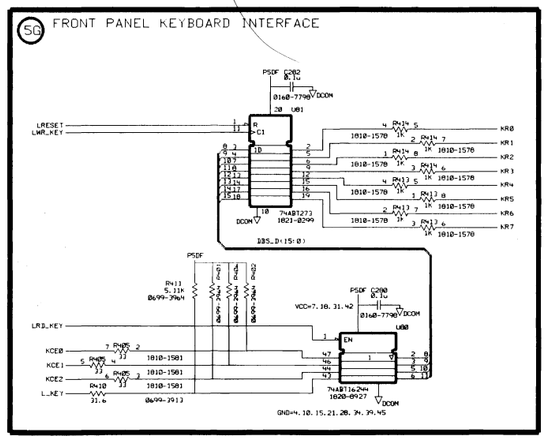

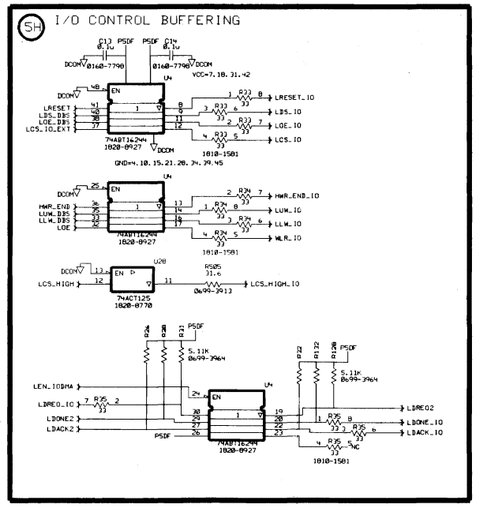

HP RESTRICTED
THIS DOCUMENT CONTAINS CONFIDENTIAL, PROPRIETARY INFORMATION THAT IS HEWLETT-PACKARD (HP) PROPERTY. DO NOT DISCLOSE TO OR DUPLICATE FOR OTHERS EXCEPT AS AUTHORIZED BY HP.

LAST CHECKED	DATE	SCHEMATIC, PWA Processor SERIAL BUS, FRONT PANEL KBD AT-KBD, IF-COUNT	HEWLETT PACKARD 5100
ENGINEER	SHEET 5 OF 9	TITLE	E4401-60059 PART NUMBER
DRAWN BY	SIZE D	HP_EW01/60059/DA3844/proc.top sheet5 PATHNAME	
	DA3844 ASSY. REV.	A3844 BRD. REV. PAGE 5 OF 18	D-E4401-60059-1 DWG. NO.

REVISIONS
SEE PAGE 1 FOR REVISION HISTORY

6A POSITIVE PEAK DETECTOR

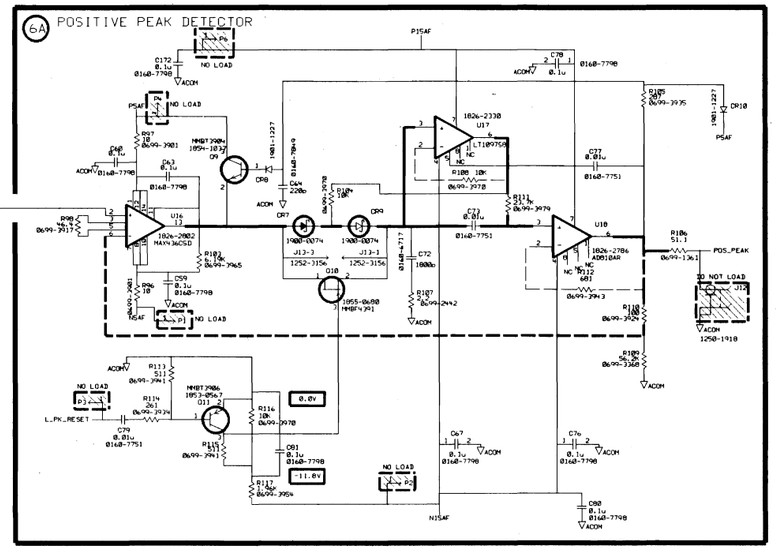

6C NEGATIVE PEAK DETECTOR

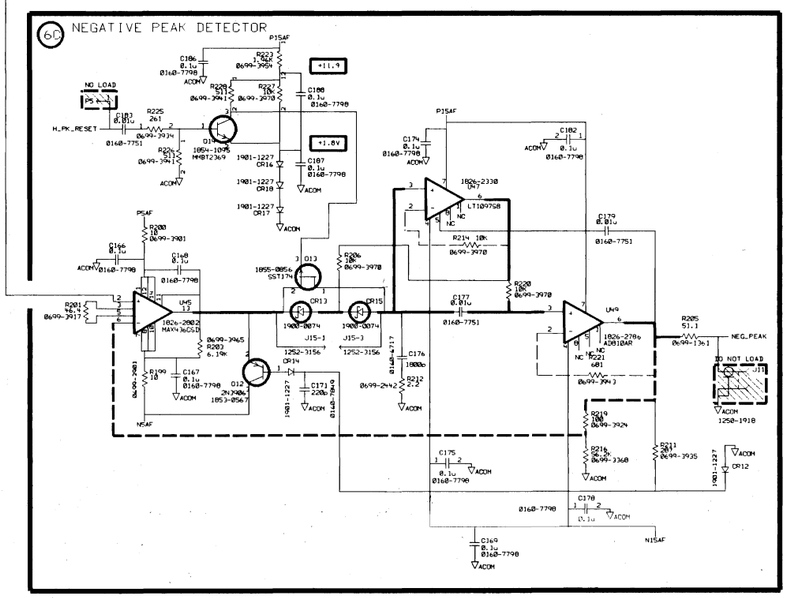

6D PEAK DETECTOR RESETS

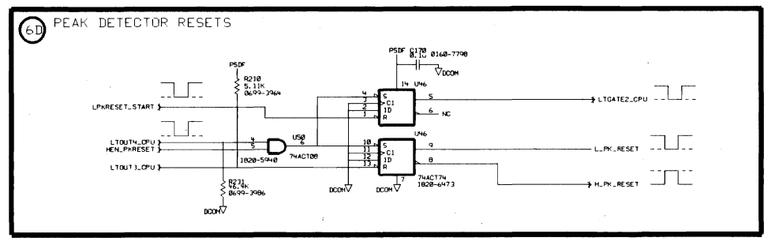

6B PULL-UP & SERIES RESISTORS

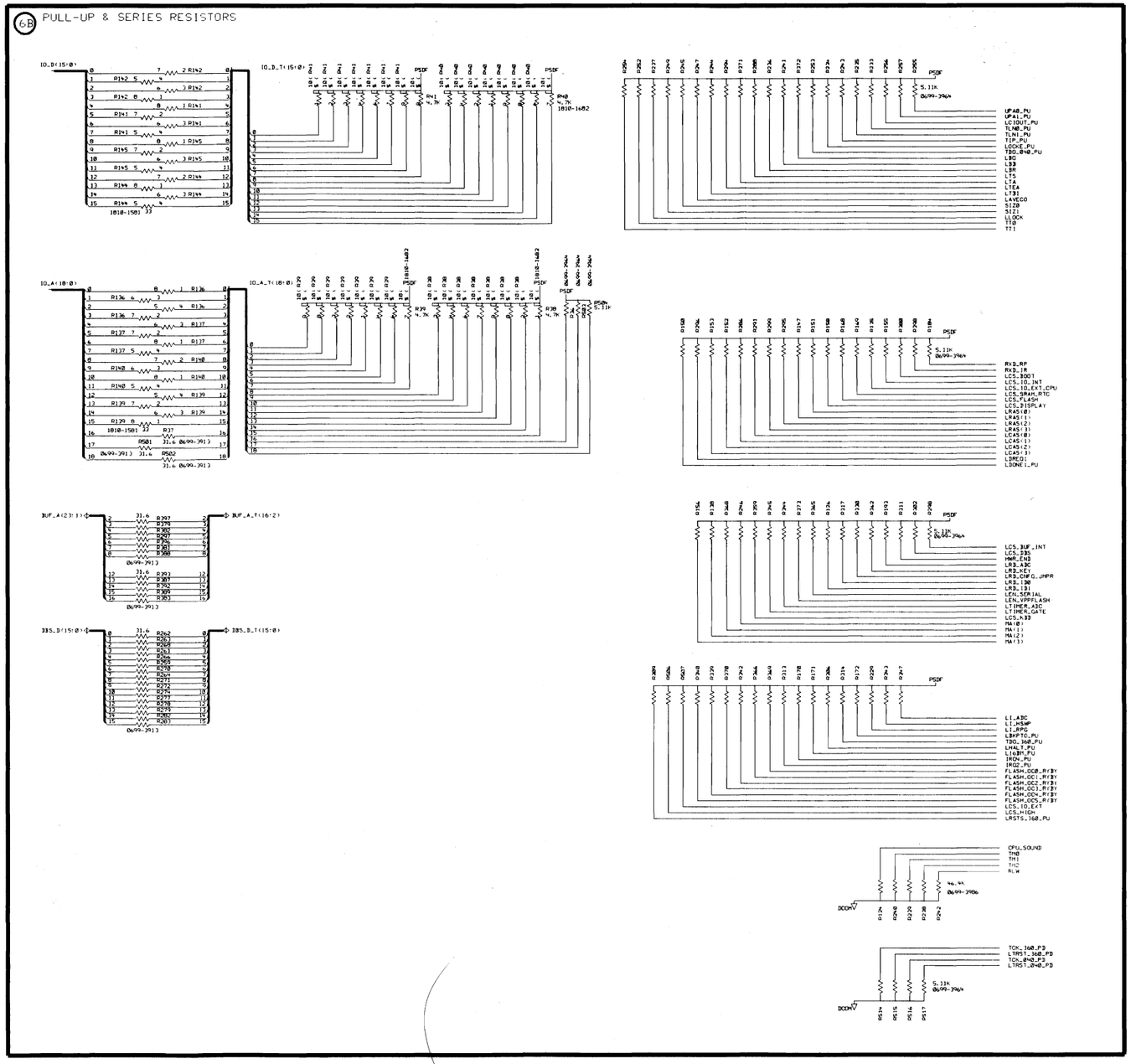

HP RESTRICTED
THIS DOCUMENT CONTAINS CONFIDENTIAL, PROPRIETARY INFORMATION THAT IS HEWLETT-PACKARD (HP) PROPERTY. DO NOT DISCLOSE TO OR DUPLICATE FOR OTHERS EXCEPT AS AUTHORIZED BY HP.

LAST CHECKED	DATE	SCHEMATIC, PWA Processor PEAK DETECTORS TERMINATOR & PULLUP RESISTORS	HEWLETT PACKARD 5100
ENGINEER	SHEET 6 OF 9	TITLE	
DRAWN BY	SIZE D	HP_E4401/60059/DA3844/proc_top sheet6 PATHNAME	E4401-60059 PART NUMBER
	DA3844 ASSY. REV.	A3844 BRD. REV. PAGE 6 OF 18	D-E4401-60059-1 DWG. NO.

Scans by ArtekMedia => 2009

REVISIONS
SEE PAGE 1 FOR REVISION HISTORY

7A PROCESSOR ID. MOTHERBOARD ID. DISPLAY ID

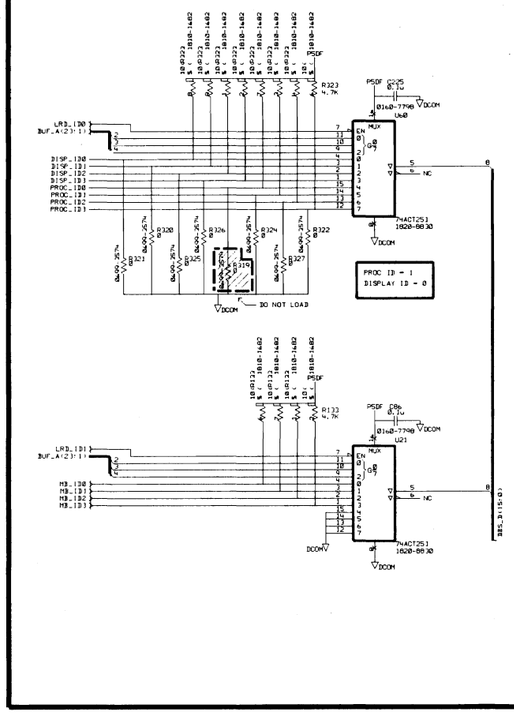

7B CONFIG SWITCH

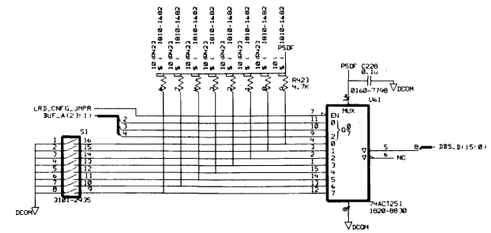

7C RS-232 BUFFER

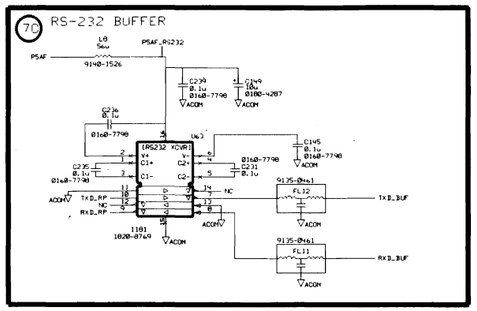

7D IO INTERRUPT CONDITIONING

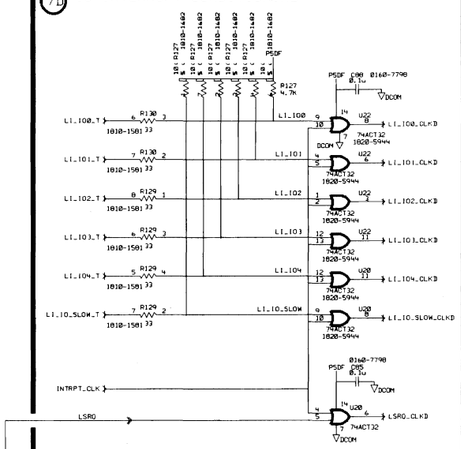

7E LED INDICATORS

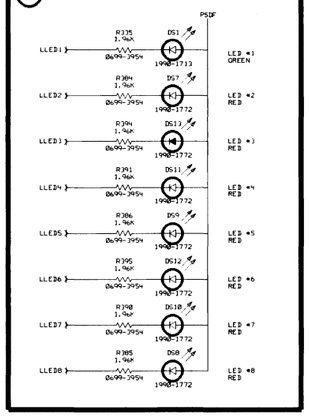

7F PRESET GATE

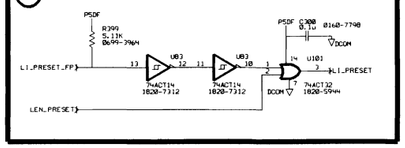

7G CLOCK DISTRIBUTION

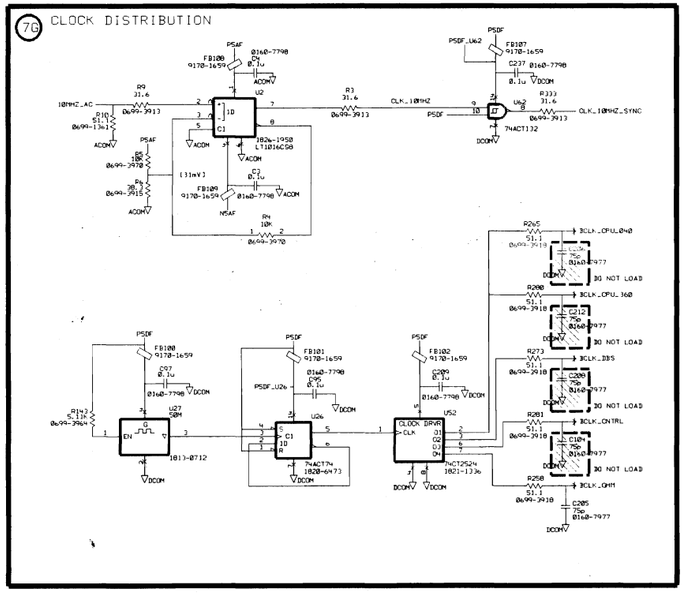

7H LSRO BUFFER

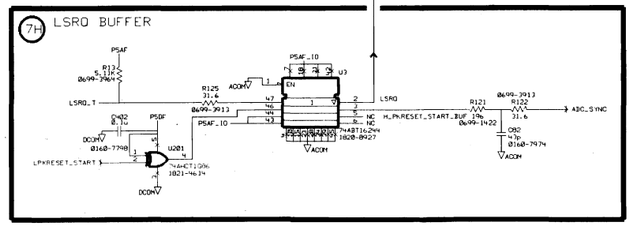

HP RESTRICTED
THIS DOCUMENT CONTAINS CONFIDENTIAL, PROPRIETARY INFORMATION THAT IS HEWLETT-PACKARD (HP) PROPERTY. DO NOT DISCLOSE TO OR DUPLICATE FOR OTHERS EXCEPT AS AUTHORIZED BY HP.

LAST CHECKED	DATE	SCHEMATIC, PWA Processor CLOCKS, INTERRUPTS, LEDS ID'S, CONFIG SWITCH	HEWLETT PACKARD 5300
ENGINEER	SHEET 7 OF 9	TITLE	
DRAWN BY	SIZE D	HP_EVM01/60059/DA3844/proc_top sheet7	E4401-60059 PART NUMBER
	DA3844 ASSY. REV	A3844 PWB REV	PAGE 7 OF 18	D-E4401-60059-1 DWG. NO.

REVISIONS
SEE PAGE 1 FOR REVISION HISTORY

8A RS-232 CONNECTOR

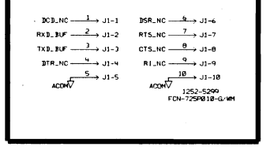

8B ANALOG CARDCAGE & I/O INTERFACE CONNECTORS

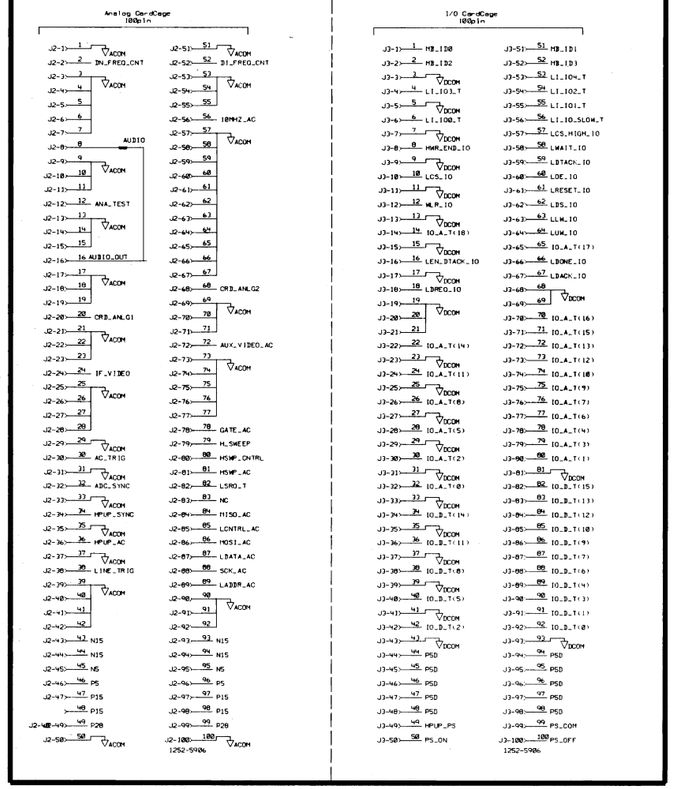

8C FRONT PANEL CONNECTOR

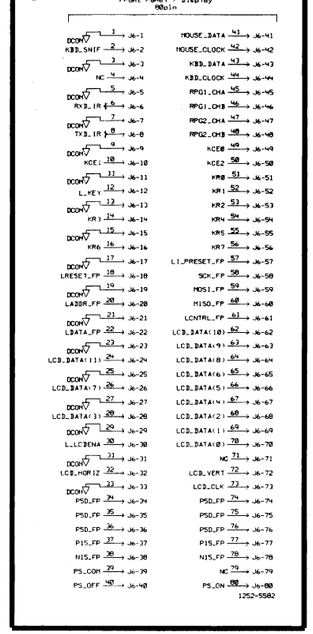

8D VGA CONNECTOR

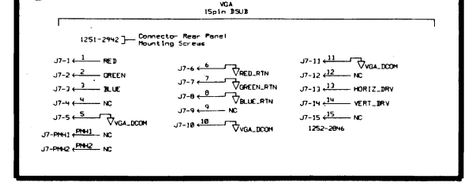

8E GND TESTPOINTS

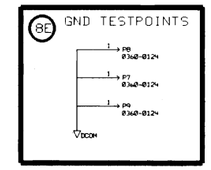

8F MISC MECHANICAL

EN001-00049 Processor Rear Panel Plate

0515-1934 Processor Rear Panel Plate Mounting Screw

These parts are associated with the connector J2

8G PAL J-TAG CONNECTOR

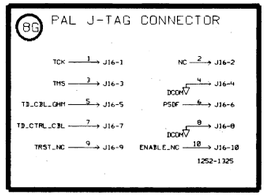

8H FAN CONNECTOR

8I SPARE PARTS

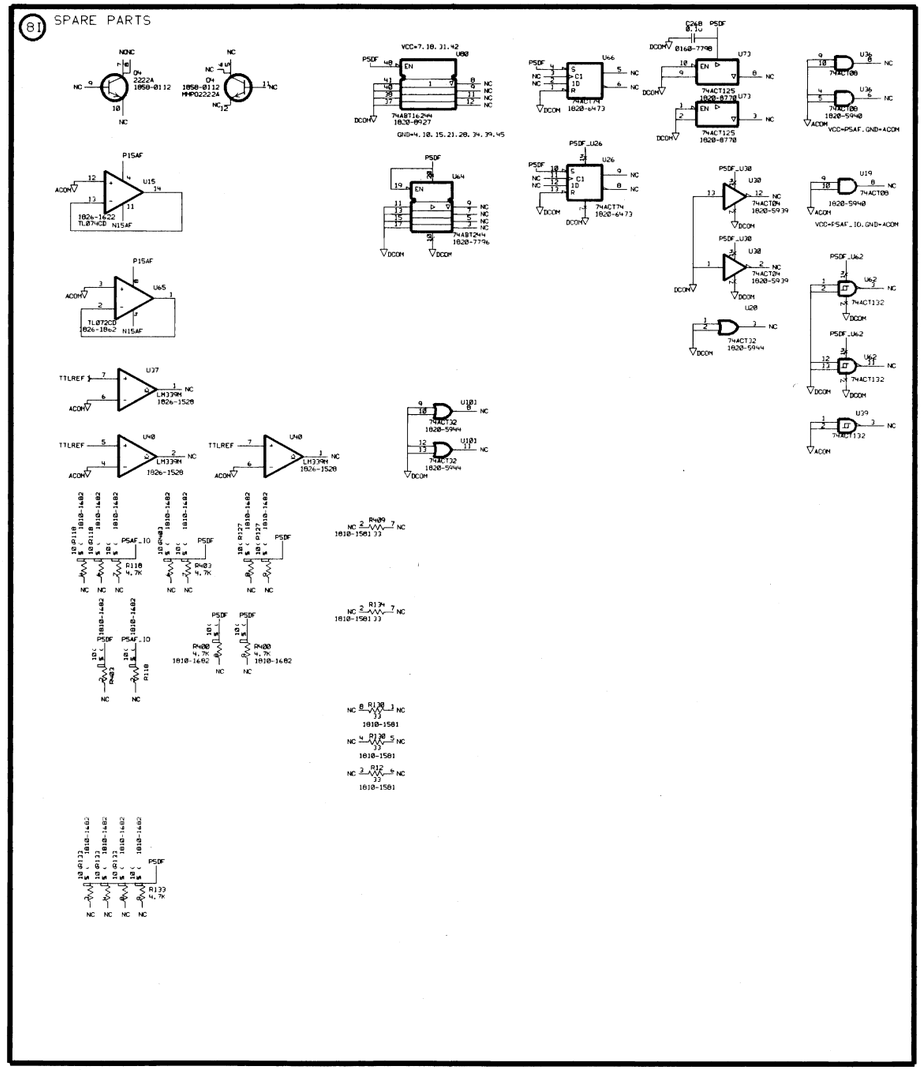
NONC
2222A
1850-0112
NC
1850-0112
MMBT2222A
PISAF
U15
1826-1522
TL072CD
1826-1862
NISAF
U45
U37
LM339M
1826-1520
U40
U44
74ABT16244
1820-8927
74ABT244
1820-6473
74ACT125
1820-8770
74ACT00
1820-5948
74ACT32
1820-5944
74ACT74
1820-6473
74ACT139
1820-5948
74ACT132
1820-5944
74ACT00
1820-5948
74ACT32
1820-5944
74ACT139
1820-5948
74ACT32
1820-5944
74ACT32
1820-5944
74ACT32
1820-5944

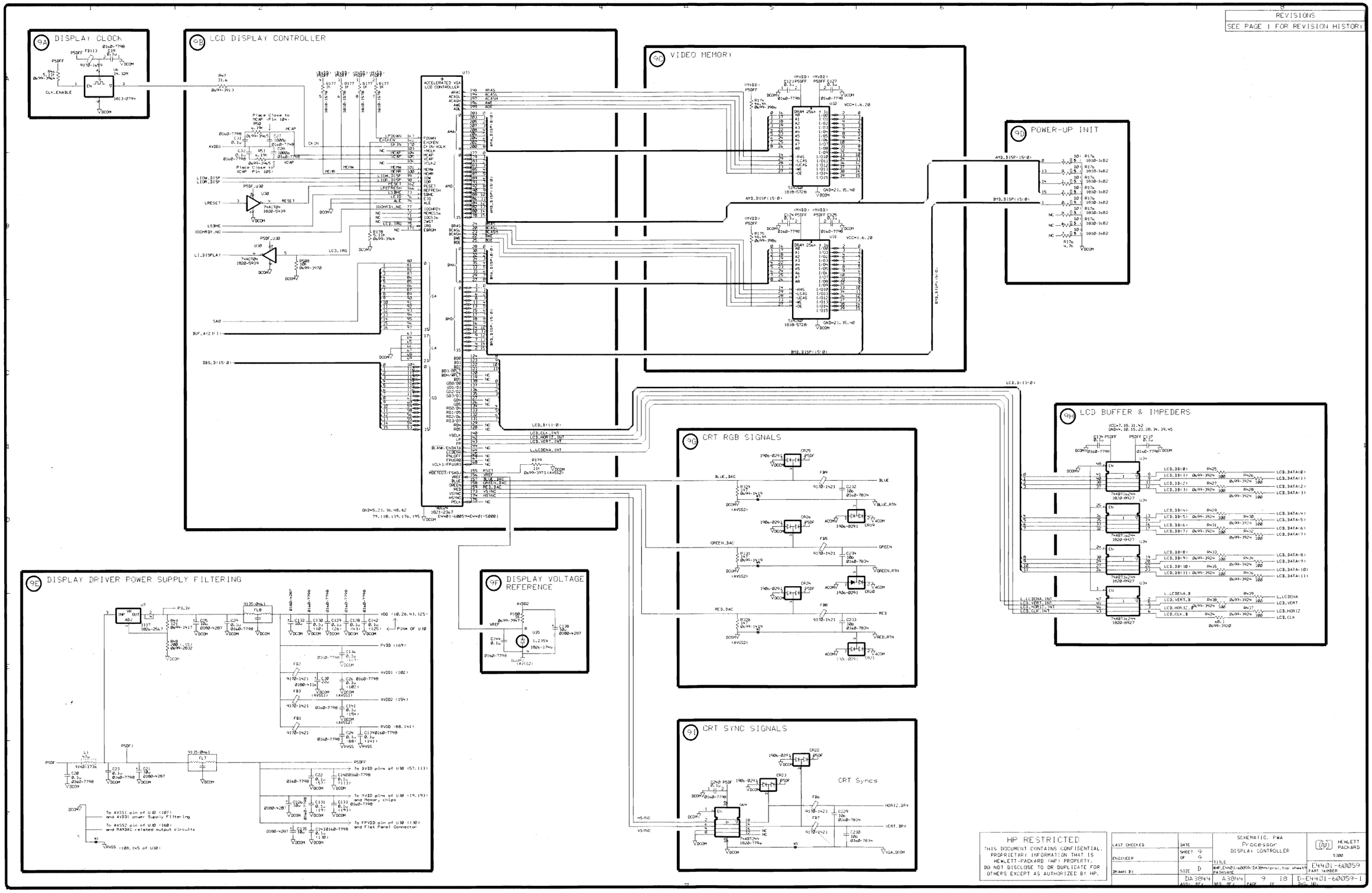
REVISIONS
SEE PAGE 1 FOR REVISION HISTORY
9A DISPLAY CLOCK
9B LCD DISPLAY CONTROLLER
9C VIDEO MEMORY
9D POWER-UP INIT
9E DISPLAY DRIVER POWER SUPPLY FILTERING
9F DISPLAY VOLTAGE REFERENCE
9G CRT RGB SIGNALS
9H LCD BUFFER & IMPEDERS
9I CRT SYNC SIGNALS
CRT Syncs
HP RESTRICTED
THIS DOCUMENT CONTAINS CONFIDENTIAL, PROPRIETARY INFORMATION THAT IS HEWLETT-PACKARD (HP) PROPERTY. DO NOT DISCLOSE TO OR DUPLICATE FOR OTHERS EXCEPT AS AUTHORIZED BY HP.
LAST CHECKED
ENGINEER
DRAWN BY
DATE
SHEET 9 OF 9
SIZE D
SCHEMATIC, PWA
Processor
DISPLAY CONTROLLER
HEWLETT PACKARD
5100
E4401-60059
PART NUMBER
DA38944
A38944
9 18
D-E4401-60059-1

REVISIONS
SEE PAGE 1 FOR REVISION HISTORY

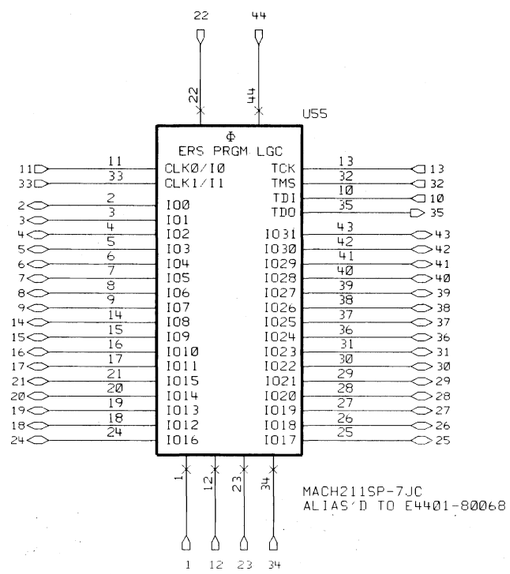

HP RESTRICTED
THIS DOCUMENT CONTAINS CONFIDENTIAL, PROPRIETARY INFORMATION THAT IS HEWLETT-PACKARD (HP) PROPERTY. DO NOT DISCLOSE TO OR DUPLICATE FOR OTHERS EXCEPT AS AUTHORIZED BY HP.

LAST CHECKED	DATE	SCHEMATIC. PWA Processor CONTROL PAL LOWER LEVEL	HEWLETT PACKARD 5300
ENGINEER	SHEET 1 OF 1	TITLE	
DRAWN BY	SIZE B	$HP_E4401/60059/DA3844/control sheet1 PATHNAME	E4401-60059 PART NUMBER
	DA3844 ASSY. REV	A3844 BRD. REV / PAGE 10 OF 18	B-E4401-60059-1 DWG. NO.

Scans by ArtekMedia => 2009

REVISIONS
SEE PAGE 1 FOR REVISION HISTORY

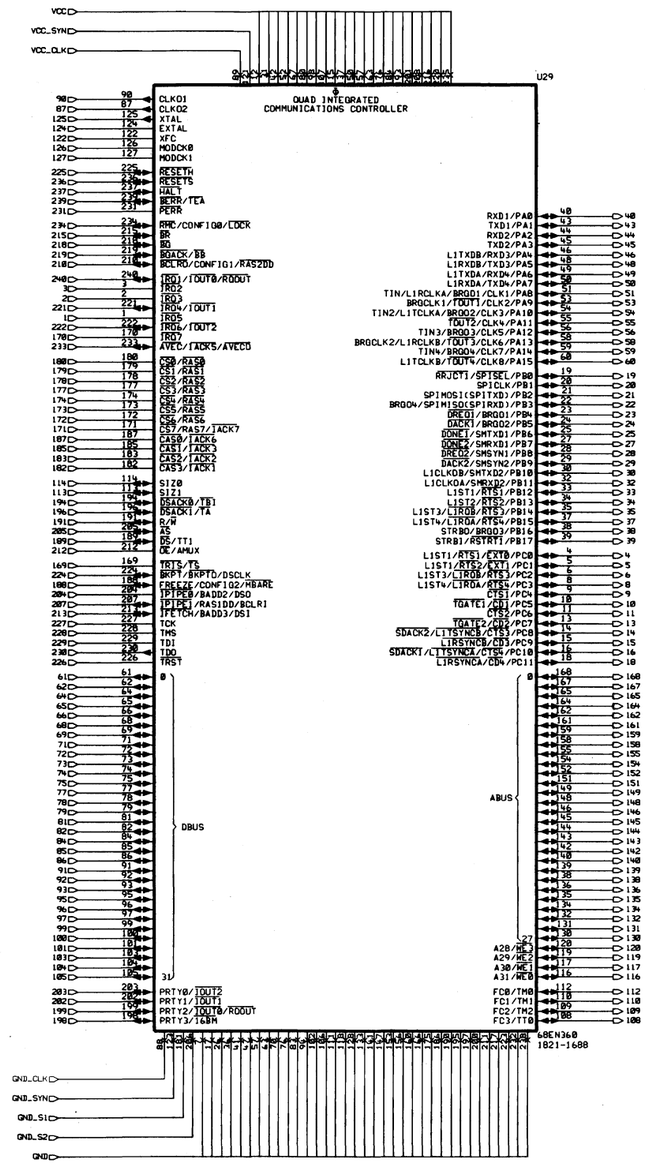

HP RESTRICTED

THIS DOCUMENT CONTAINS CONFIDENTIAL. PROPRIETARY INFORMATION THAT IS HEWLETT-PACKARD (HP) PROPERTY. DO NOT DISCLOSE TO OR DUPLICATE FOR OTHERS EXCEPT AS AUTHORIZED BY HP.

LAST CHECKED	DATE	SCHEMATIC, PWA Processor 68EN360 LOWER LEVEL	HEWLETT PACKARD 5308
ENGINEER	SHEET 1 OF 1	TITLE	
DRAWN BY	SIZE C	SHP_E4401/60059/DA3844/68en360 sheet1 PATHNAME	E4401-60059 PART NUMBER
	DA3844 ASSY. REV	A3844 BRD. REV	PAGE 11 OF 18	C-E4401-60059-1 DWG. NO.

REVISIONS
SEE PAGE 1 FOR REVISION HISTORY

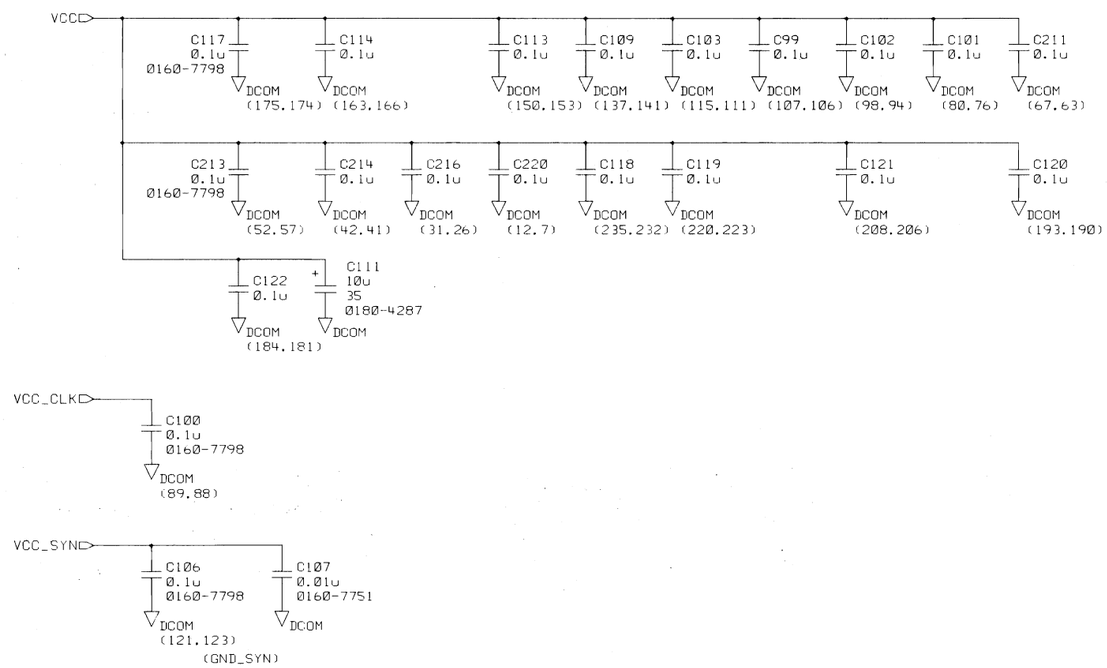

HP RESTRICTED

THIS DOCUMENT CONTAINS CONFIDENTIAL. PROPRIETARY INFORMATION THAT IS HEWLETT-PACKARD (HP) PROPERTY. DO NOT DISCLOSE TO OR DUPLICATE FOR OTHERS EXCEPT AS AUTHORIZED BY HP.

LAST CHECKED	DATE	SCHEMATIC. PWA Processor 68EN360 BYPASS CAPS LOWER LEVEL	HEWLETT PACKARD 5300
ENGINEER	SHEET 1 OF 1	TITLE	
DRAWN BY	SIZE B	$HP_E4401/60059/DA3844/bypass360 sheet1 PATHNAME	E4401-60059 PART NUMBER
	DA3844 ASSY. REV	A3844 BRD. REV	PAGE 12 OF 18	B-E4401-60059-1 DWG. NO.

Scans by ArtekMedia => 2009

REVISIONS
SEE PAGE 1 FOR REVISION HISTORY

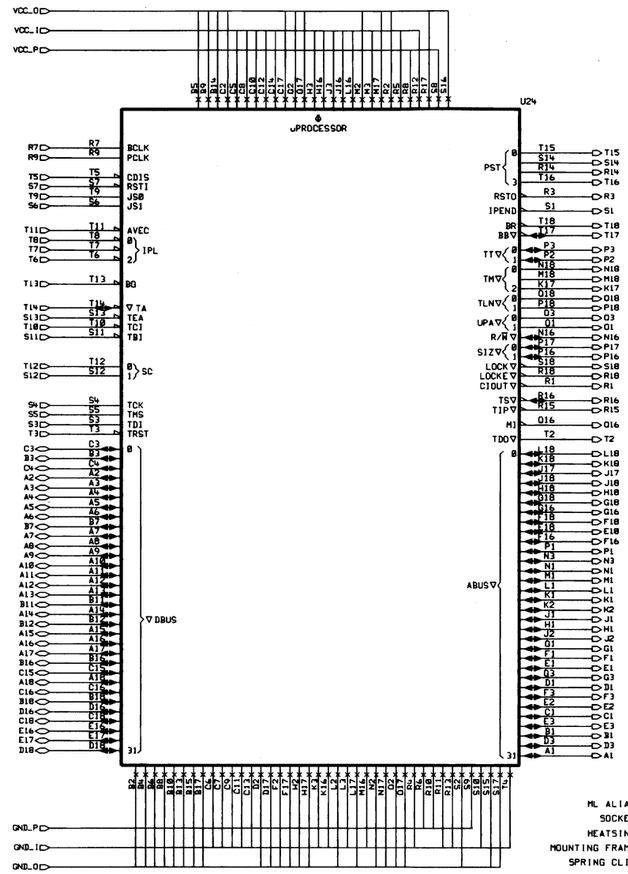

68LC040
ML ALIAS ==> E4401-60059=1821-3812
SOCKET ==> 1200-1801
HEATSINK ==> 5021-5053
MOUNTING FRAME ==> 1205-1197
SPRING CLIP ==> 5001-0490

HP RESTRICTED
THIS DOCUMENT CONTAINS CONFIDENTIAL, PROPRIETARY INFORMATION THAT IS HEWLETT-PACKARD (HP) PROPERTY. DO NOT DISCLOSE TO OR DUPLICATE FOR OTHERS EXCEPT AS AUTHORIZED BY HP.

LAST CHECKED	DATE	SCHEMATIC, PWA Processor 68EC/LC040 INTERCONNECT LOWER LEVEL	HEWLETT PACKARD 5300
ENGINEER	SHEET 1 OF 1	TITLE	
DRAWN BY	SIZE C	$HP_E4401/60059/DA3844/68ec040 sheet1 PATHNAME	E4401-60059 PART NUMBER
	DA3844 ASSY. REV	A3844 BRD. REV	13 18 PAGE OF	C-E4401-60059-1 DWG. NO.

REVISIONS
SEE PAGE 1 FOR REVISION HISTORY

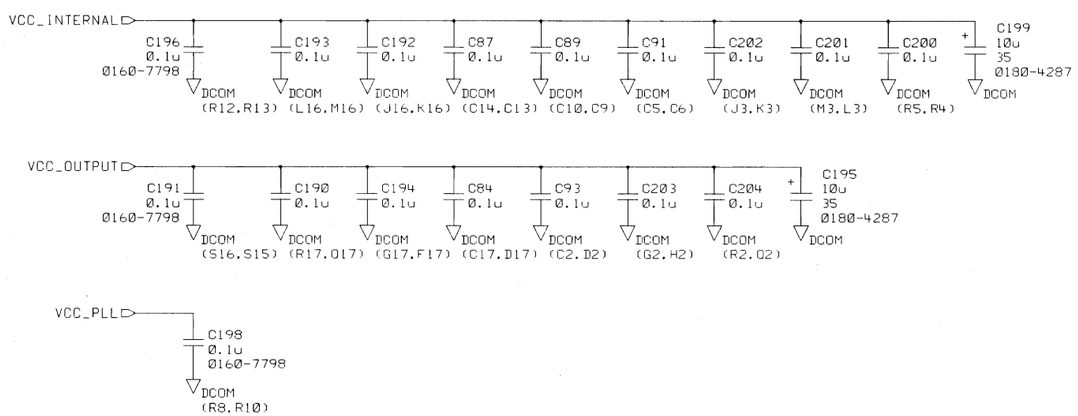

HP RESTRICTED

THIS DOCUMENT CONTAINS CONFIDENTIAL. PROPRIETARY INFORMATION THAT IS HEWLETT-PACKARD (HP) PROPERTY. DO NOT DISCLOSE TO OR DUPLICATE FOR OTHERS EXCEPT AS AUTHORIZED BY HP.

LAST CHECKED	DATE	SCHEMATIC, PWA Processor 68040 BYPASS CAPS LOWER LEVEL	HEWLETT PACKARD 5300
ENGINEER	SHEET 1 OF 1	TITLE	
DRAWN BY	SIZE B	$HP_E4401/60059/DA3844/bypass040 sheet1 PATHNAME	E4401-60059 PART NUMBER
	DA3844 ASSY. REV	A3844 BRD. REV / PAGE 14 OF 18	B-E4401-60059-1 DWG. NO.

Scans by ArtekMedia => 2009

REVISIONS
SEE PAGE 1 FOR REVISION HISTORY

NOTE: THIS PART IS ALIASED TO 1826-4193
IT IS BEING USED FOR ITS GEOMETRY

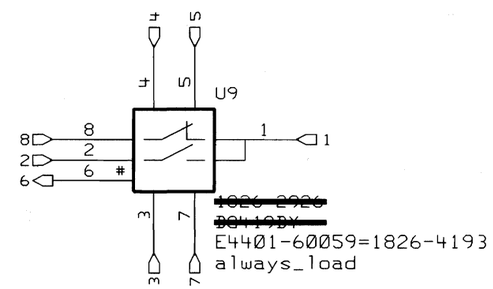

HP RESTRICTED

THIS DOCUMENT CONTAINS CONFIDENTIAL, PROPRIETARY INFORMATION THAT IS HEWLETT-PACKARD (HP) PROPERTY. DO NOT DISCLOSE TO OR DUPLICATE FOR OTHERS EXCEPT AS AUTHORIZED BY HP.

LAST CHECKED	DATE	SCHEMATIC, PWA Processor AD8180AR LOWER LEVEL		HEWLETT PACKARD 5300
ENGINEER	SHEET 1 OF 1	TITLE		
DRAWN BY	SIZE A	$HP_E4401/60059/DA3844/ad8180 sheet1 PATHNAME		E4401-60059 PART NUMBER
	DA3844 ASSY. REV	A3844 BRD. REV	PAGE 15 OF 18	A-E4401-60059-1 DWG. NO.

REVISIONS
SEE PAGE 1 FOR REVISION HISTORY

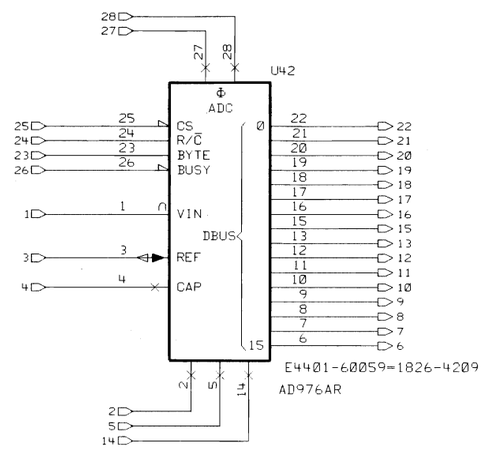

HP RESTRICTED
THIS DOCUMENT CONTAINS CONFIDENTIAL. PROPRIETARY INFORMATION THAT IS HEWLETT-PACKARD (HP) PROPERTY. DO NOT DISCLOSE TO OR DUPLICATE FOR OTHERS EXCEPT AS AUTHORIZED BY HP.

LAST CHECKED	DATE	SCHEMATIC. PWA Processor 16-BIT ADC LOWER LEVEL	HEWLETT PACKARD 5300
ENGINEER	SHEET 1 OF 1	TITLE	
DRAWN BY	SIZE B	$HP_E4401/60059/DA3844/16bitadc sheet1 PATHNAME	E4401-60059 PART NUMBER
	DA3844 ASSY. REV	A3844 BRD. REV PAGE 16 OF 18	B-E4401-60059-1 DWG. NO.

Scans by ArtekMedia => 2009

REVISIONS
SEE PAGE 1 FOR REVISION HISTORY

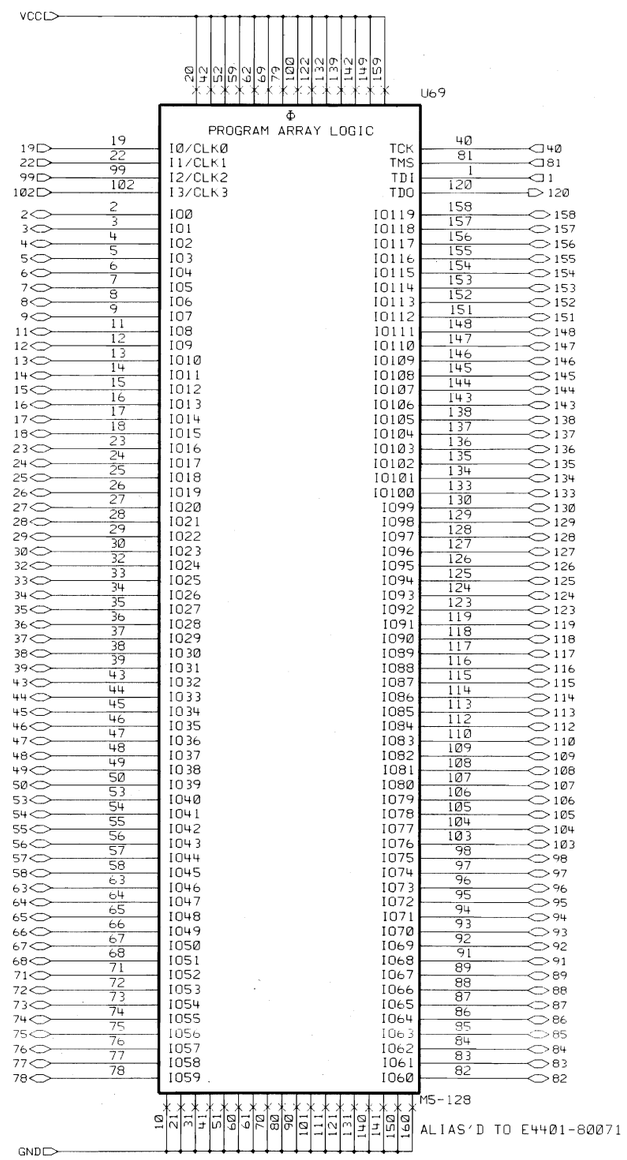

HP RESTRICTED

THIS DOCUMENT CONTAINS CONFIDENTIAL, PROPRIETARY INFORMATION THAT IS HEWLETT-PACKARD (HP) PROPERTY. DO NOT DISCLOSE TO OR DUPLICATE FOR OTHERS EXCEPT AS AUTHORIZED BY HP.

LAST CHECKED	DATE	SCHEMATIC, PWA Processor GATE, HSWP, & MISC. PAL LOWER LEVEL	HEWLETT PACKARD 5300
ENGINEER	SHEET 1 OF 1	TITLE	
DRAWN BY	SIZE B	$HP_E4401/60059/DA3844/gatehswp sheet1 PATHNAME	E4401-60059 PART NUMBER
	DA3844 ASSY. REV	A3844 BRD. REV	PAGE 17 OF 18	B-E4401-60059-1 DWG. NO.

REVISIONS
SEE PAGE 1 FOR REVISION HISTORY

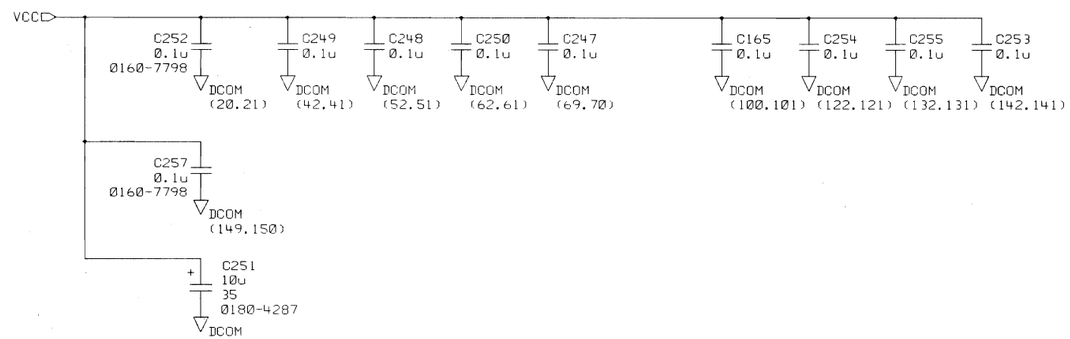

HP RESTRICTED

THIS DOCUMENT CONTAINS CONFIDENTIAL. PROPRIETARY INFORMATION THAT IS HEWLETT-PACKARD (HP) PROPERTY. DO NOT DISCLOSE TO OR DUPLICATE FOR OTHERS EXCEPT AS AUTHORIZED BY HP.

LAST CHECKED	DATE	SCHEMATIC. PWA Processor GATE HSWP MISC PAL BYPASS CAPS LOWER LEVEL	HEWLETT PACKARD 5300
ENGINEER	SHEET 1 OF 1	TITLE	
DRAWN BY	SIZE B	$HP_E4401/60059/DA3844/bypass_ghm sheet1 PATHNAME	E4401-60059 PART NUMBER
	DA3844 ASSY. REV	A3844 BRD. REV / PAGE 18 OF 18	B-E4401-60059-1 DWG. NO.

Scans by ArtekMedia => 2009

c

Component-Level Information Packet for E4401-60008

Speaker/Floppy

Agilent Technologies

Agilent Part Number: E4401-90021

Printed in Malaysia April 2001

Notice

The information contained in this document is subject to change without notice. Agilent Technologies makes no warranty of any kind with regard to this material, including but not limited to, the implied warranties of merchantability and fitness for a particular purpose. Agilent Technologies shall not be liable for errors contained herein or for incidental or consequential damages in connection with the furnishing, performance, or use of this material.

© Copyright Agilent Technologies Inc. 2000, 2001
All Rights Reserved. Reproduction, adaptation, or translation without prior written permission is prohibited, except as allowed under the copyright laws.

Scans by ArtekMedia => 2009

Agilent Part Number E4401-60008
Speaker/Floppy

Reference Designator	Agilent Part Number	Qty	Description	Mgr Code	Mfr Part Number
C1	0160-7748	1	CAP-FXD 1000pF +-10% 50 V CER X7R	02010	06035C102KAT
C2	0160-7798	1	CAP-FXD 0.1uF +-10% 50 V CER X7R	06352	C2012X7R1H104K
C3	0180-3628	1	CAP-FXD 220uF +-20% 16 V AL-ELCTLT	06360	SME16VB221M8X11LL
C4	0160-7798	1	CAP-FXD 0.1uF +-10% 50 V CER X7R	06352	C2012X7R1H104K
C5	0180-4287	1	CAP-FXD 10uF +-20% 35 V TA	02010	TAJD106M035
C6	0160-7798	1	CAP-FXD 0.1uF +-10% 50 V CER X7R	06352	C2012X7R1H104K
C7	0160-7798	1	CAP-FXD 0.1uF +-10% 50 V CER X7R	06352	C2012X7R1H104K
C8	0160-7809	1	CAP-FXD 0.015uF +-10% 50 V CER X7R	12340	C0603C153K5RAC
C9	0160-7798	1	CAP-FXD 0.1uF +-10% 50 V CER X7R	06352	C2012X7R1H104K
C10	0160-7798	1	CAP-FXD 0.1uF +-10% 50 V CER X7R	06352	C2012X7R1H104K
C11	0160-7798	1	CAP-FXD 0.1uF +-10% 50 V CER X7R	06352	C2012X7R1H104K
C12	0160-7798	1	CAP-FXD 0.1uF +-10% 50 V CER X7R	06352	C2012X7R1H104K
C13	0180-3628	1	CAP-FXD 220uF +-20% 16 V AL-ELCTLT	06360	SME16VB221M8X11LL
C14	0160-7798	1	CAP-FXD 0.1uF +-10% 50 V CER X7R	06352	C2012X7R1H104K
C15	0160-7798	1	CAP-FXD 0.1uF +-10% 50 V CER X7R	06352	C2012X7R1H104K
C16	0160-7798	1	CAP-FXD 0.1uF +-10% 50 V CER X7R	06352	C2012X7R1H104K
C17	0180-4287	1	CAP-FXD 10uF +-20% 35 V TA	02010	TAJD106M035
C18	0160-7798	1	CAP-FXD 0.1uF +-10% 50 V CER X7R	06352	C2012X7R1H104K
C19	0180-4287	1	CAP-FXD 10uF +-20% 35 V TA	02010	TAJD106M035
C20	0180-4287	1	CAP-FXD 10uF +-20% 35 V TA	02010	TAJD106M035
C21	0160-7798	1	CAP-FXD 0.1uF +-10% 50 V CER X7R	06352	C2012X7R1H104K
C22	0160-7798	1	CAP-FXD 0.1uF +-10% 50 V CER X7R	06352	C2012X7R1H104K
C23	0160-7798	1	CAP-FXD 0.1uF +-10% 50 V CER X7R	06352	C2012X7R1H104K
C24	0160-7798	1	CAP-FXD 0.1uF +-10% 50 V CER X7R	06352	C2012X7R1H104K
C25	0180-4287	1	CAP-FXD 10uF +-20% 35 V TA	02010	TAJD106M035
C26	0160-7798	1	CAP-FXD 0.1uF +-10% 50 V CER X7R	06352	C2012X7R1H104K
C27	0160-7798	1	CAP-FXD 0.1uF +-10% 50 V CER X7R	06352	C2012X7R1H104K

Agilent Part Number E4401-60008
Speaker/Floppy

Reference Designator	Agilent Part Number	Qty	Description	Mgr Code	Mfr Part Number
C28	0160-7798	1	CAP-FXD 0.1uF +-10% 50 V CER X7R	06352	C2012X7R1H104K
C29	0160-7798	1	CAP-FXD 0.1uF +-10% 50 V CER X7R	06352	C2012X7R1H104K
C30	0180-3628	1	CAP-FXD 220uF +-20% 16 V AL-ELCTLT	06360	SME16VB221M8X11LL
C31	0180-3628	1	CAP-FXD 220uF +-20% 16 V AL-ELCTLT	06360	SME16VB221M8X11LL
C32	0160-7798	1	CAP-FXD 0.1uF +-10% 50 V CER X7R	06352	C2012X7R1H104K
C33	0160-6982	1	CAP-FXD 0.033uF +-10% 50 V CER X7R	02010	08055C333KAT_A
C34	0160-7798	1	CAP-FXD 0.1uF +-10% 50 V CER X7R	06352	C2012X7R1H104K
C35	0180-4116	1	CAP-FXD 22uF +-20% 20 V TA	02010	TAJD226M020
C36	0180-3628	1	CAP-FXD 220uF +-20% 16 V AL-ELCTLT	06360	SME16VB221M8X11LL
C37	0160-7751	1	CAP-FXD 0.01uF +-10% 50 V CER X7R	02010	06035C103KAT
C38	0160-7751	1	CAP-FXD 0.01uF +-10% 50 V CER X7R	02010	06035C103KAT
CR1	1906-0291	1	DIODE-DUAL 70V 100MA T0-236AA	02910	BAV99
CR2	1906-0291	1	DIODE-DUAL 70V 100MA T0-236AA	02910	BAV99
CR3	1906-0291	1	DIODE-DUAL 70V 100MA T0-236AA	02910	BAV99
E1	0590-1870	1	THREADED INSERT-STDF M3 X 0.5 14-MM-LG	03981	KFB3-M3-14-ET
E2	0590-1870	1	THREADED INSERT-STDF M3 X 0.5 14-MM-LG	03981	KFB3-M3-14-ET
E3	0590-1870	1	THREADED INSERT-STDF M3 X 0.5 14-MM-LG	03981	KFB3-M3-14-ET
E4	0590-1870	1	THREADED INSERT-STDF M3 X 0.5 14-MM-LG	03981	KFB3-M3-14-ET
E5	0590-1076	1	THREADED INSERT-NUT M3 X 0.5 1.5-MM-LG	03981	KFS2-M3
E6	0590-1076	1	THREADED INSERT-NUT M3 X 0.5 1.5-MM-LG	03981	KFS2-M3
E7	0590-1076	1	THREADED INSERT-NUT M3 X 0.5 1.5-MM-LG	03981	KFS2-M3
E8	0590-1076	1	THREADED INSERT-NUT M3 X 0.5 1.5-MM-LG	03981	KFS2-M3
FL1	9135-0461	1	FILTER-SUPPRESSION EMI; SMT; WORKING	09939	NFM61R10T102M00-621
FL2	9135-0461	1	FILTER-SUPPRESSION EMI; SMT; WORKING	09939	NFM61R10T102M00-621
FL3	9135-0461	1	FILTER-SUPPRESSION EMI; SMT; WORKING	09939	NFM61R10T102M00-621

 **Indicates factory-selected value*

Scans by ArtekMedia => 2009

c

Agilent Part Number E4401-60008
Speaker/Floppy

Reference Designator	Agilent Part Number	Qty	Description	Mgr Code	Mfr Part Number
FL4	9135-0461	1	FILTER-SUPPRESSION EMI; SMT; WORKING	09939	NFM61R10T102M0 0-621
J1	1252-5906	1	CONN-RECT MICRORBN 100-CKT 100-CONT	01380	2-557101-5
J2	1252-6215	1	CONNECTOR-TEL JACK-PHONE 5-CKT	05057	35RAPC4BV4
J3	1252-6064	1	CONN-POST TYPE .100-PIN-SPCG-MTG-END	03418	70555-0036
J4	1252-4923	1	CONN-POST TYPE 1-PIN-SPCG-MTG-END	03418	52030-2610
L1	9140-1526	1	INDUCTOR 56uH +-5% 2.8W-mmX3.4LG-mm Q30	06352	NL322522T-560J
L2	9140-1238	1	INDUCTOR 10uH +-5% 2.8W-mmX3.4LG-mm Q30	06352	NL322522T-100J
L3	9140-1735	1	INDUCTOR 22uH +20% -20% 7.3W-mmX7.3LG-mm	06353	636CY-220M
L4	9140-1736	1	INDUCTOR 47uH +20% -20% 7.3W-mmX7.3LG-mm	06353	E636CY-470M-P3
L5	9140-1238	1	INDUCTOR 10uH +-5% 2.8W-mmX3.4LG-mm Q30	06352	NL322522T-100J
L6	9140-1735	1	INDUCTOR 22uH +20% -20% 7.3W-mmX7.3LG-mm	06353	636CY-220M
L7	9140-1526	1	INDUCTOR 56uH +-5% 2.8W-mmX3.4LG-mm Q30	06352	NL322522T-560J
L8	9140-1736	1	INDUCTOR 47uH +20% -20% 7.3W-mmX7.3LG-mm	06353	E636CY-470M-P3
MAE5	0515-0430	1	SCREW-MACHINE ASSEMBLY M3 X 0.5 6MM-LG	05610	0515-0430
MAE6	0515-0430	1	SCREW-MACHINE ASSEMBLY M3 X 0.5 6MM-LG	05610	0515-0430
MAE7	0515-0430	1	SCREW-MACHINE ASSEMBLY M3 X 0.5 6MM-LG	05610	0515-0430
MAE8	0515-0430	1	SCREW-MACHINE ASSEMBLY M3 X 0.5 6MM-LG	05610	0515-0430
MAJ2	0535-0163	1	NUT-HEX M6 X 0.5 BRS	05057	P3315
MAJ3	E4401-00063	1	MOUNT-SPEAKER	28480	E4401-00063
MAJ4	8120-8763	1	FLAT-RIBBON-ASSY 26-COND 30-MM-LG	21657	FFC1.00D26/ 028L3.53.50606SB
MBJ2	3050-0017	1	WASHER-FL MTLC 1/4 IN .26-IN-ID	04821	3050-0017
MBJ3	E4401-40027	1	FOAM SPACER	28480	E4401-40027
MBJ4	0950-2782	1	DISC DRIVE 3.5" FLOPPY DRIVE; .5" HEIGHT	13160	FD05HF5630/F

**Indicates factory-selected value*

Agilent Part Number E4401-60008
Speaker/Floppy

Reference Designator	Agilent Part Number	Qty	Description	Mgr Code	Mfr Part Number
MCJ2	1252-7580	1	CLIP GROUNDING CLIP FOR AUDIO JACK HP	03647	1252-7580
MCJ3	9164-0453	1	SPEAKER ASSEMBLY	36253	9164-0453
MCJ4	0515-1048	1	SCREW-SKT-HD-CAP M2.5 X 0.45 4MM-LG	06691	0515-1048
MDJ2	0470-0532		SEALANT LCTITE 290/PRMABND HL-126	02136	290
MDJ3	0361-1504	1	RIVET-SPCLY FLH 0DIA	02201	SRH-3045
MDJ4	0515-1048	1	SCREW-SKT-HD-CAP M2.5 X 0.45 4MM-LG	06691	0515-1048
MEJ3	0361-1504	1	RIVET-SPCLY FLH 0DIA	02201	SRH-3045
MEJ4	0515-1048	1	SCREW-SKT-HD-CAP M2.5 X 0.45 4MM-LG	06691	0515-1048
MFJ3	0361-1504	1	RIVET-SPCLY FLH 0DIA	02201	SRH-3045
MFJ4	0515-1048	1	SCREW-SKT-HD-CAP M2.5 X 0.45 4MM-LG	06691	0515-1048
MGJ3	0361-1504	1	RIVET-SPCLY FLH 0DIA	02201	SRH-3045
MGJ4	E4401-00065	1	BRKT-FLOPPY DRVR	28480	E4401-00065
MHJ4	E4401-00065	1	BRKT-FLOPPY DRVR	28480	E4401-00065
R1	1810-1581	1	NET-RES 4 33.0 OHM 8-PIN	00746	MNR34K5AWJ330
R2	0699-3964	1	RESISTOR 5.11K +-1% .063W TKF TC0+-200	09891	RK73H1J5111F
R3	0699-3967	1	RESISTOR 7.5K +-1% .063W TKF TC0+-200	09891	RK73H1J7501F
R4	0699-3970	1	RESISTOR 10K +-1% .063W TKF TC0+-200	09891	RK73H1J1002F
R5	0699-3970	1	RESISTOR 10K +-1% .063W TKF TC0+-200	09891	RK73H1J1002F
R6	0699-3970	1	RESISTOR 10K +-1% .063W TKF TC0+-200	09891	RK73H1J1002F
R7	0699-3993	1	RESISTOR 100K +-1% .063W TKF TC0+-200	09891	RK73H1J1003F
R8	0699-3987	1	RESISTOR 51.1K +-1% .063W TKF TC0+-200	09891	RK73H1J5112F
R9	0699-3987	1	RESISTOR 51.1K +-1% .063W TKF TC0+-200	09891	RK73H1J5112F
R10	0699-3964	1	RESISTOR 5.11K +-1% .063W TKF TC0+-200	09891	RK73H1J5111F
R11	1810-1581	1	NET-RES 4 33.0 OHM 8-PIN	00746	MNR34K5AWJ330
R12	1810-1581	1	NET-RES 4 33.0 OHM 8-PIN	00746	MNR34K5AWJ330
R13	1810-1581	1	NET-RES 4 33.0 OHM 8-PIN	00746	MNR34K5AWJ330
R14	1810-1581	1	NET-RES 4 33.0 OHM 8-PIN	00746	MNR34K5AWJ330
R15	1810-1581	1	NET-RES 4 33.0 OHM 8-PIN	00746	MNR34K5AWJ330

 **Indicates factory-selected value*

Scans by ArtekMedia => 2009

Agilent Part Number E4401-60008
Speaker/Floppy

Reference Designator	Agilent Part Number	Qty	Description	Mgr Code	Mfr Part Number
R16	1810-1581	1	NET-RES 4 33.0 OHM 8-PIN	00746	MNR34K5AWJ330
R17	1810-1581	1	NET-RES 4 33.0 OHM 8-PIN	00746	MNR34K5AWJ330
R18	1810-1581	1	NET-RES 4 33.0 OHM 8-PIN	00746	MNR34K5AWJ330
R19	0699-3970	1	RESISTOR 10K +-1% .063W TKF TC0+-200	09891	RK73H1J1002F
R20	0699-3970	1	RESISTOR 10K +-1% .063W TKF TC0+-200	09891	RK73H1J1002F
R21	0699-3970	1	RESISTOR 10K +-1% .063W TKF TC0+-200	09891	RK73H1J1002F
R22	0699-3970	1	RESISTOR 10K +-1% .063W TKF TC0+-200	09891	RK73H1J1002F
R23	0699-3970	1	RESISTOR 10K +-1% .063W TKF TC0+-200	09891	RK73H1J1002F
R24	0699-3970	1	RESISTOR 10K +-1% .063W TKF TC0+-200	09891	RK73H1J1002F
R25	0699-1503	1	RESISTOR 0 CWM	05524	CRCW1206000
R26	0699-2442	1	RESISTOR 2.2 +-5% .125W TKF TC0+-200	09891	RM73B2BT2R2J
R27	0699-3964	1	RESISTOR 5.11K +-1% .063W TKF TC0+-200	09891	RK73H1J5111F
U1	1826-3234	1	IC OP AMP HIGH-CUR DUAL 8 PIN PLSTC-SOIC	03285	OP279GS
U2	1826-2513	1	D/A 8-BIT 20-P-SOIC CMOS	03285	DAC-8229FS
U3	E4411-80003	1	PAL-SPEAKER BD	28480	E4411-80003
U4	1820-7796	1	IC DRVR BICMOS/ABT LINE OCTL	02910	74ABT244D
U5	1820-7312	1	IC SCHMITT-TRIG CMOS/ACT INV HEX	01698	SN74ACT14D
U6	1821-1144	1	IC-SUPER I/O; DUAL UARTs; IEEE 1284; IDE	03406	PC87332VLJ
U7	1813-0710	1	CLK-OSC-XTAL STD 24.0-MHZ 0.01%	12768	SG-615-24.000MC
U8	1826-1963	1	IC AUDIO AMPL PWR SINGLE 8 PIN	03406	LM386M-1
XU3	1200-1590	1	SOCKET-IC-PLCC 20-CONT SQUARE J-LEAD	01380	3-822499-3

**Indicates factory-selected value*

5300 D-E4401-60008-2

SYM	REVISIONS		APPROVED	DATE
A	AS ISSUED	/CO	G. KORELICH/	11-16-98
B	PER ECO 53-13237	/CO	T. GIBSON/	02-11-99

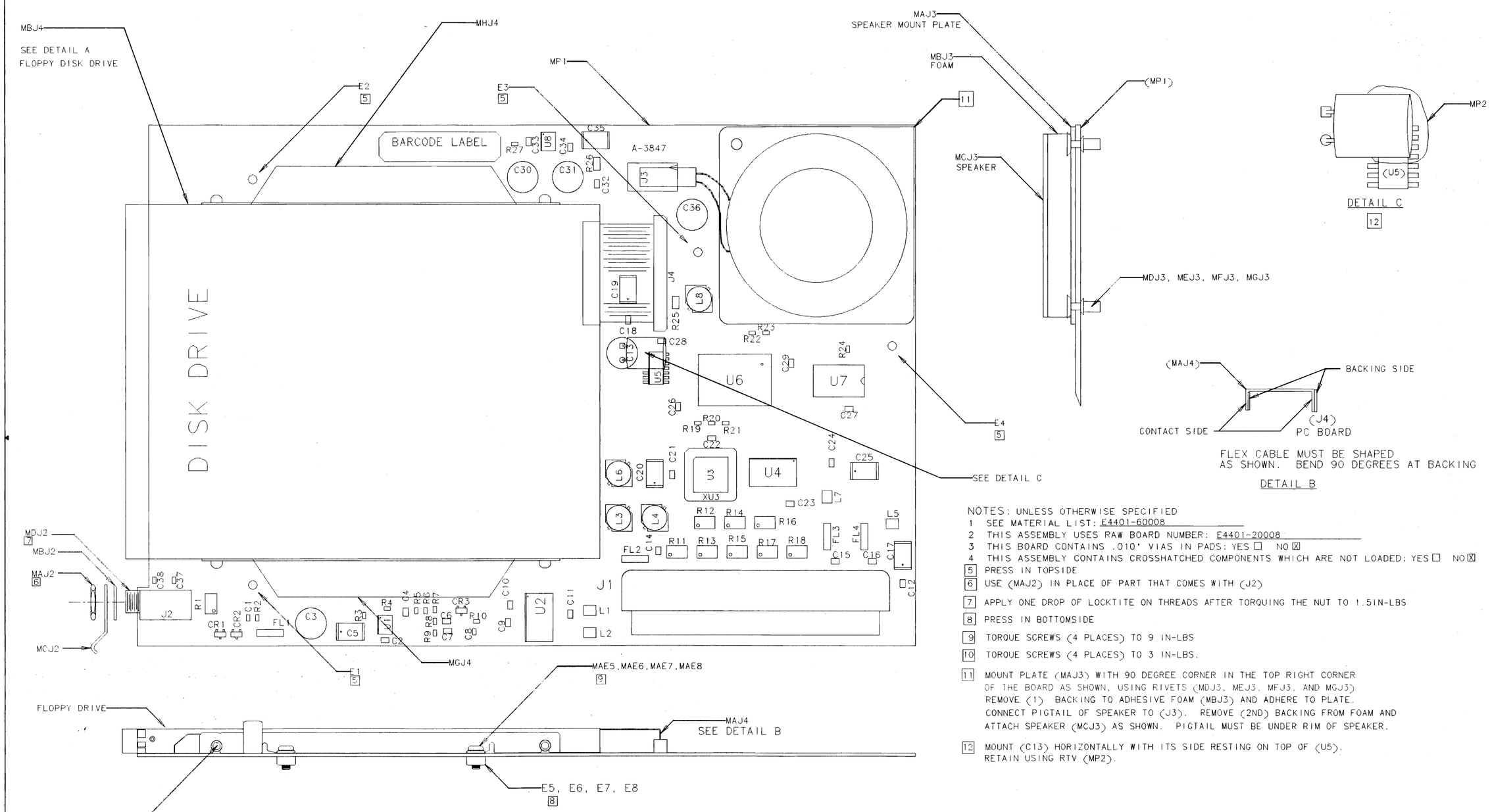

NOTES: UNLESS OTHERWISE SPECIFIED

1 SEE MATERIAL LIST: E4401-60008

2 THIS ASSEMBLY USES RAW BOARD NUMBER: E4401-20008

3 THIS BOARD CONTAINS .010" VIAS IN PADS: YES ☐ NO ☒

4 THIS ASSEMBLY CONTAINS CROSSHATCHED COMPONENTS WHICH ARE NOT LOADED: YES ☐ NO ☒

5 PRESS IN TOPSIDE

6 USE (MAJ2) IN PLACE OF PART THAT COMES WITH (J2)

7 APPLY ONE DROP OF LOCKTITE ON THREADS AFTER TORQUING THE NUT TO 1.5IN-LBS

8 PRESS IN BOTTOMSIDE

9 TORQUE SCREWS (4 PLACES) TO 9 IN-LBS

10 TORQUE SCREWS (4 PLACES) TO 3 IN-LBS.

11 MOUNT PLATE (MAJ3) WITH 90 DEGREE CORNER IN THE TOP RIGHT CORNER OF THE BOARD AS SHOWN, USING RIVETS (MDJ3, MEJ3, MFJ3, AND MGJ3) REMOVE (1) BACKING TO ADHESIVE FOAM (MBJ3) AND ADHERE TO PLATE. CONNECT PIGTAIL OF SPEAKER TO (J3). REMOVE (2ND) BACKING FROM FOAM AND ATTACH SPEAKER (MCJ3) AS SHOWN. PIGTAIL MUST BE UNDER RIM OF SPEAKER.

12 MOUNT (C13) HORIZONTALLY WITH ITS SIDE RESTING ON TOP OF (U5). RETAIN USING RTV (MP2).

TOP SIDE

HP PROPRIETARY
THIS DOCUMENT CONTAINS CONFIDENTIAL, PROPRIETARY INFORMATION THAT IS HEWLETT-PACKARD (HP) PROPERTY. DO NOT DISCLOSE TO OR DUPLICATE FOR OTHERS EXCEPT AS AUTHORIZED BY HP

UNLESS OTHERWISE SPECIFIED, DIMENSIONS ARE IN INCHES
TOLERANCES: XX XXX .010 XX XX .02
THIRD ANGLE PROJECTION
DO NOT SCALE THIS DRAWING

DRAWN BY	R ODAY	DATE 5-1-96
ENGINEER/CHECKER	G KORELICH	DATE 5-1-96
RELEASE TO PROD.		DATE
SUPERSEDES DWG.		

TITLE: ASSEMBLY, TOP FLOPPY BOARD

MENTOR FILENAME
SCALE NONE
SHEET 1 OF 1
PART NUMBER E4401-60008
D-E4401-60008-2

HEWLETT PACKARD

Scans by ArtekMedia => 2009

D-E4401-60008-1

REV	INFORMATION	APPROVED	DATE
A	AS ISSUED		
B	PER ECO53-13237		
C	REVISED PER ECO53-13599 /TM		
D	PER ECO 53-13297 /RH	T. GIBSON/	07-06-99

Sheet 1 - Index & Block Diagram

Sheet 2 (2A)- AUDIO AMP & SPEAKER
(2B)- BOARD ID
(2C)- MOTHERBOARD CONNECTOR
(2D)- TERMINATION RESISTORS
(2E)- CONTROL PAL
(2F)- SUPER I/O
(2G)- FLOPPY CONNECTOR
(2H)- POWER SUPPLY FILTERING
(2I)- EXTRAS

BLOCK DIAGRAM

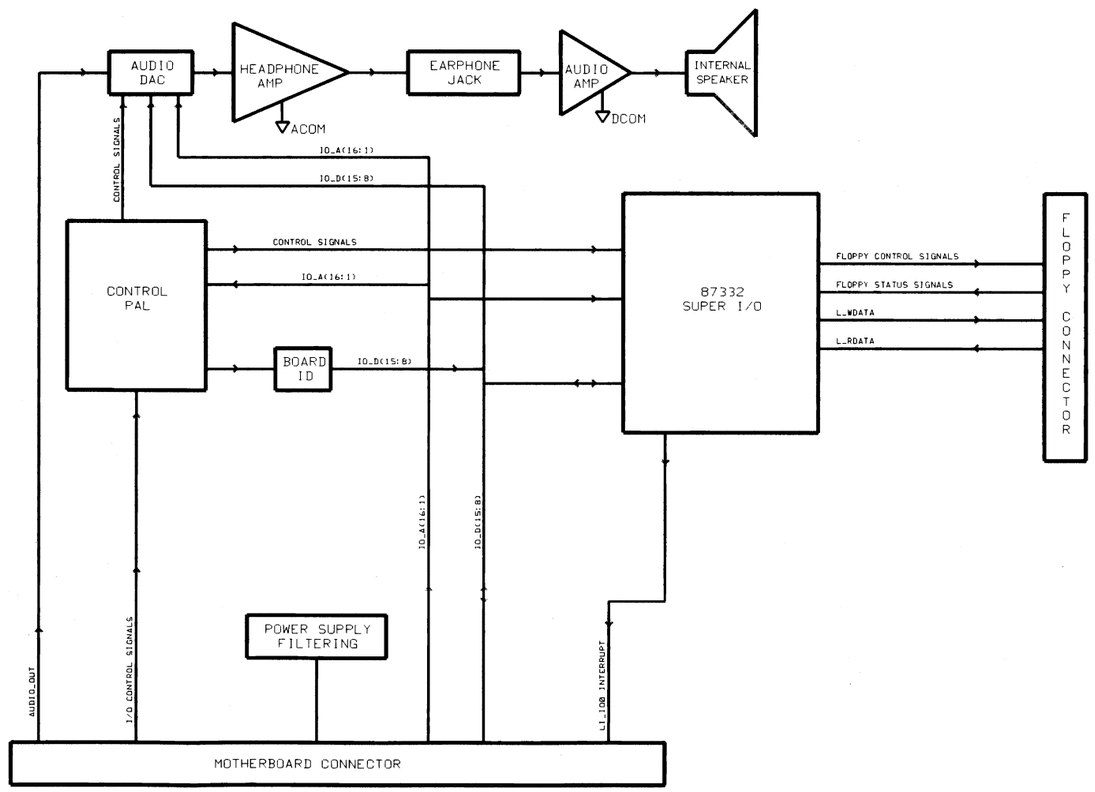

HP RESTRICTED
THIS DOCUMENT CONTAINS CONFIDENTIAL, PROPRIETARY INFORMATION THAT IS HEWLETT-PACKARD (HP) PROPERTY. DO NOT DISCLOSE TO OR DUPLICATE FOR OTHERS EXCEPT AS AUTHORIZED BY HP.

LAST CHECKED	DATE	SCHEMATIC, PWA FLOPPY Circuit Roadmap	HEWLETT PACKARD 5100
ENGINEER	SHEET 0 OF 0	TITLE	
DRAWN BY	SIZE D	PATHNAME hp_ew01/60000/DA3847/floppy3.top sheet1	E4401-60008 PART NUMBER
	DA3847 ASSY REV	A3847 WB REV	0 PAGE OF 2	D-E4401-60008-1 DWG NO

REVISIONS
SEE PAGE 1 FOR REVISION HISTORY

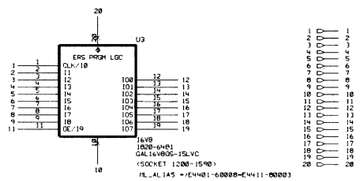

HP RESTRICTED
THIS DOCUMENT CONTAINS CONFIDENTIAL, PROPRIETARY INFORMATION THAT IS HEWLETT-PACKARD (HP) PROPERTY. DO NOT DISCLOSE TO OR DUPLICATE FOR OTHERS EXCEPT AS AUTHORIZED BY HP.

LAST CHECKED	DATE	SCHEMATIC, PWA FLOPPY Control PAL	HEWLETT PACKARD 5300
ENGINEER	SHEET 3 OF 3	TITLE	
DRAWN BY	SIZE D	PATHNAME hp/E4401/60008/CA3847/floppy3.pal sheet2	E4401-60008 PART NUMBER
	CA 3847 ASSY. REV	A 3847 MB REV	3 3 PAGE OF
			D-E4401-60008-1 DWG. NO.

Scans by ArtekMedia => 2009

c

Component-Level Information Packet for E4401-60107

Motherboard (ESA E-Series)

Agilent Technologies

Agilent Part Number: E4401-90119

Printed in Malaysia April 2001

Notice

The information contained in this document is subject to change without notice. Agilent Technologies makes no warranty of any kind with regard to this material, including but not limited to, the implied warranties of merchantability and fitness for a particular purpose. Agilent Technologies shall not be liable for errors contained herein or for incidental or consequential damages in connection with the furnishing, performance, or use of this material.

© Copyright Agilent Technologies Inc. 2000, 2001
All Rights Reserved. Reproduction, adaptation, or translation without prior written permission is prohibited, except as allowed under the copyright laws.

Scans by ArtekMedia => 2009

Agilent Part Number E4401-60107
Motherboard (ESA E-Series)

Reference Designator	Agilent Part Number	Qty	Description	Mgr Code	Mfr Part Number
J1	1252-6024	1	CONN-RECT MICRORBN 100-CKT 100-CONT	03418	71661-9810
J2	1252-7020	1	CONN-RECT MICRORBN 40-CKT 40-CONT	01380	557102-5
J4	1252-7020	1	CONN-RECT MICRORBN 40-CKT 40-CONT	01380	557102-5
J6	1252-6024	1	CONN-RECT MICRORBN 100-CKT 100-CONT	03418	71661-9810
J7	1252-6024	1	CONN-RECT MICRORBN 100-CKT 100-CONT	03418	71661-9810
J10	1252-6024	1	CONN-RECT MICRORBN 100-CKT 100-CONT	03418	71661-9810
J11	1252-6024	1	CONN-RECT MICRORBN 100-CKT 100-CONT	03418	71661-9810
J12	1252-6024	1	CONN-RECT MICRORBN 100-CKT 100-CONT	03418	71661-9810
J13	1252-6024	1	CONN-RECT MICRORBN 100-CKT 100-CONT	03418	71661-9810
J14	1252-6024	1	CONN-RECT MICRORBN 100-CKT 100-CONT	03418	71661-9810
J15	1252-6024	1	CONN-RECT MICRORBN 100-CKT 100-CONT	03418	71661-9810
J16	1252-6024	1	CONN-RECT MICRORBN 100-CKT 100-CONT	03418	71661-9810
J20	1252-6024	1	CONN-RECT MICRORBN 100-CKT 100-CONT	03418	71661-9810
J21	1252-6024	1	CONN-RECT MICRORBN 100-CKT 100-CONT	03418	71661-9810
J22	1252-6024	1	CONN-RECT MICRORBN 100-CKT 100-CONT	03418	71661-9810
J23	1252-6024	1	CONN-RECT MICRORBN 100-CKT 100-CONT	03418	71661-9810
J24	1252-6024	1	CONN-RECT MICRORBN 100-CKT 100-CONT	03418	71661-9810
R1	0811-3587	1	RESISTOR 0 CWM	03123	104

**Indicates factory-selected value*

5300 D-E4401-60107-2

SYM	REVISIONS	APPROVED	DATE
A	AS ISSUED CO		

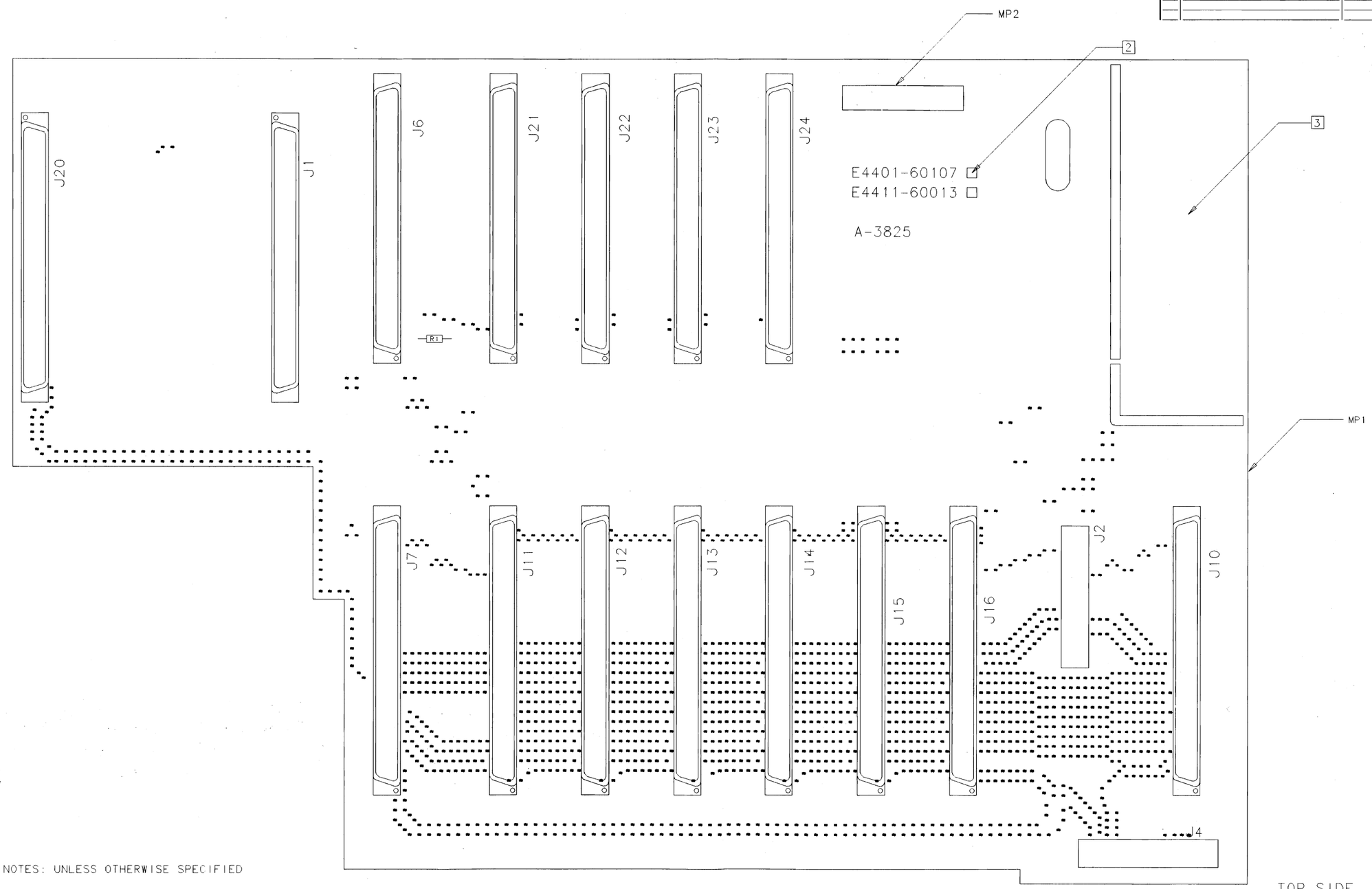

TOP SIDE

SEE MATERIAL LIST E4401-60107

NOTES: UNLESS OTHERWISE SPECIFIED

1. USE FABRICATED BOARD E4401-20107.

2 WITH PERMANENT MARKER, CHECK BOX LABEL E4401-60107

3 AFTER FINAL ASSEMLBY, REMOVE RACKING TAB.

HP PROPRIETARY
THIS DOCUMENT CONTAINS CONFIDENTIAL, PROPRIETARY INFORMATION THAT IS HEWLETT-PACKARD (HP) PROPERTY. DO NOT DISCLOSE TO OR DUPLICATE FOR OTHERS EXCEPT AS AUTHORIZED BY HP.

UNLESS OTHERWISE SPECIFIED, DIMENSIONS ARE IN INCHES
TOLERANCES: XX.XXX .010 XX.XX .02
THIRD ANGLE PROJECTION
DO NOT SCALE THIS DRAWING

DRAWN BY DATE
ENGINEER/CHECKER DATE
RELEASE TO PROD. DATE
SUPERSEDES DWG

ASSEMBLY, PWB MOTHER BOARD
TITLE

MENTOR FILENAME
SCALE NONE
SHEET 1 OF 1
HEWLETT PACKARD
E4401-60107
PART NUMBER
D-E4401-60107-2

D-E4401-60107-1

REV	INFORMATION	APPROVED	DATE
A	AS ISSUED		

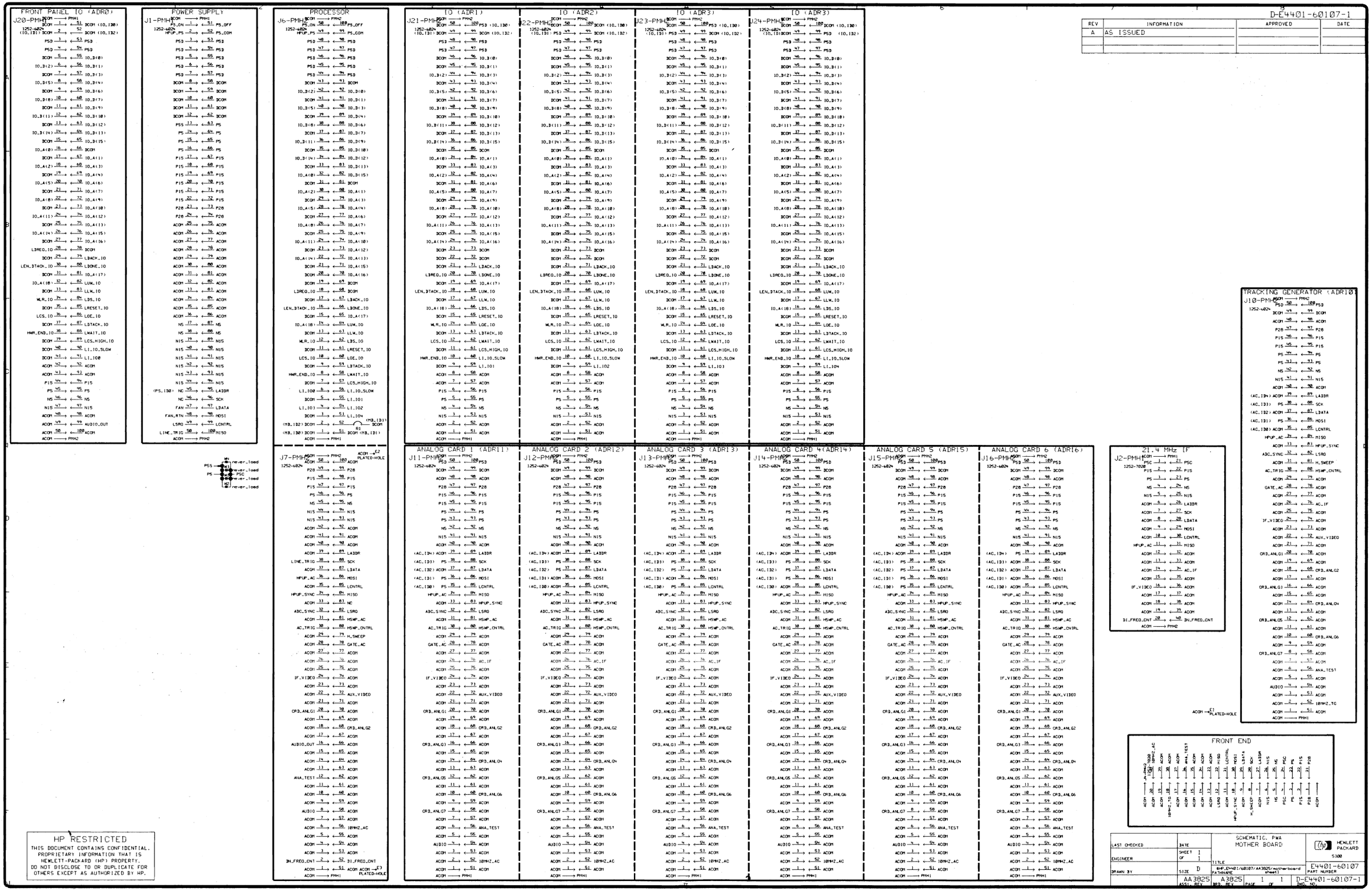

HP RESTRICTED

THIS DOCUMENT CONTAINS CONFIDENTIAL, PROPRIETARY INFORMATION THAT IS HEWLETT-PACKARD (HP) PROPERTY. DO NOT DISCLOSE TO OR DUPLICATE FOR OTHERS EXCEPT AS AUTHORIZED BY HP.

LAST CHECKED	DATE	SCHEMATIC, PWA MOTHER BOARD	HEWLETT PACKARD 5300
ENGINEER	SHEET 1 OF 1	TITLE	
DRAWN BY	SIZE D	8HP_E4401/60107/AA3825/motherboard PATHNAME sheet1	E4401-60107 PART NUMBER
	AA3825 ASSY. REV.	A3825 MBR REV. / PAGE 1 OF 1	D-E4401-60107-1 DWG. NO.

Component-Level Information Packet for E4411-60013

Motherboard (ESA L-Series)

Agilent Technologies

Agilent Part Number: E4411-90057
Printed in Malaysia April 2001

Notice

The information contained in this document is subject to change without notice. Agilent Technologies makes no warranty of any kind with regard to this material, including but not limited to, the implied warranties of merchantability and fitness for a particular purpose. Agilent Technologies shall not be liable for errors contained herein or for incidental or consequential damages in connection with the furnishing, performance, or use of this material.

© Copyright Agilent Technologies Inc. 2000, 2001
All Rights Reserved. Reproduction, adaptation, or translation without prior written permission is prohibited, except as allowed under the copyright laws.

Agilent Part Number E4411-60013
Motherboard (ESA L-Series)

Reference Designator	Agilent Part Number	Qty	Description	Mgr Code	Mfr Part Number
J1	1252-6024	1	CONN-RECT MICRORBN 100-CKT 100-CONT	03418	71661-9810
J2	1252-7020	1	CONN-RECT MICRORBN 40-CKT 40-CONT	01380	557102-5
J4	1252-7020	1	CONN-RECT MICRORBN 40-CKT 40-CONT	01380	557102-5
J6	1252-6024	1	CONN-RECT MICRORBN 100-CKT 100-CONT	03418	71661-9810
J7	1252-6024	1	CONN-RECT MICRORBN 100-CKT 100-CONT	03418	71661-9810
J10	1252-6024	1	CONN-RECT MICRORBN 100-CKT 100-CONT	03418	71661-9810
J11	1252-6024	1	CONN-RECT MICRORBN 100-CKT 100-CONT	03418	71661-9810
J12	1252-6024	1	CONN-RECT MICRORBN 100-CKT 100-CONT	03418	71661-9810
J13	1252-6024	1	CONN-RECT MICRORBN 100-CKT 100-CONT	03418	71661-9810
J14	1252-6024	1	CONN-RECT MICRORBN 100-CKT 100-CONT	03418	71661-9810
J15	1252-6024	1	CONN-RECT MICRORBN 100-CKT 100-CONT	03418	71661-9810
J16	1252-6024	1	CONN-RECT MICRORBN 100-CKT 100-CONT	03418	71661-9810
J20	1252-6024	1	CONN-RECT MICRORBN 100-CKT 100-CONT	03418	71661-9810
J21	1252-6024	1	CONN-RECT MICRORBN 100-CKT 100-CONT	03418	71661-9810
J22	1252-6024	1	CONN-RECT MICRORBN 100-CKT 100-CONT	03418	71661-9810
J23	1252-6024	1	CONN-RECT MICRORBN 100-CKT 100-CONT	03418	71661-9810
J24	1252-6024	1	CONN-RECT MICRORBN 100-CKT 100-CONT	03418	71661-9810
R1	0811-3587	1	RESISTOR 0 CWM	03123	104

**Indicates factory-selected value*

c

5300 D-E4411-60013-2

SYM	REVISIONS	APPROVED	DATE
A	AS ISSUED CO		

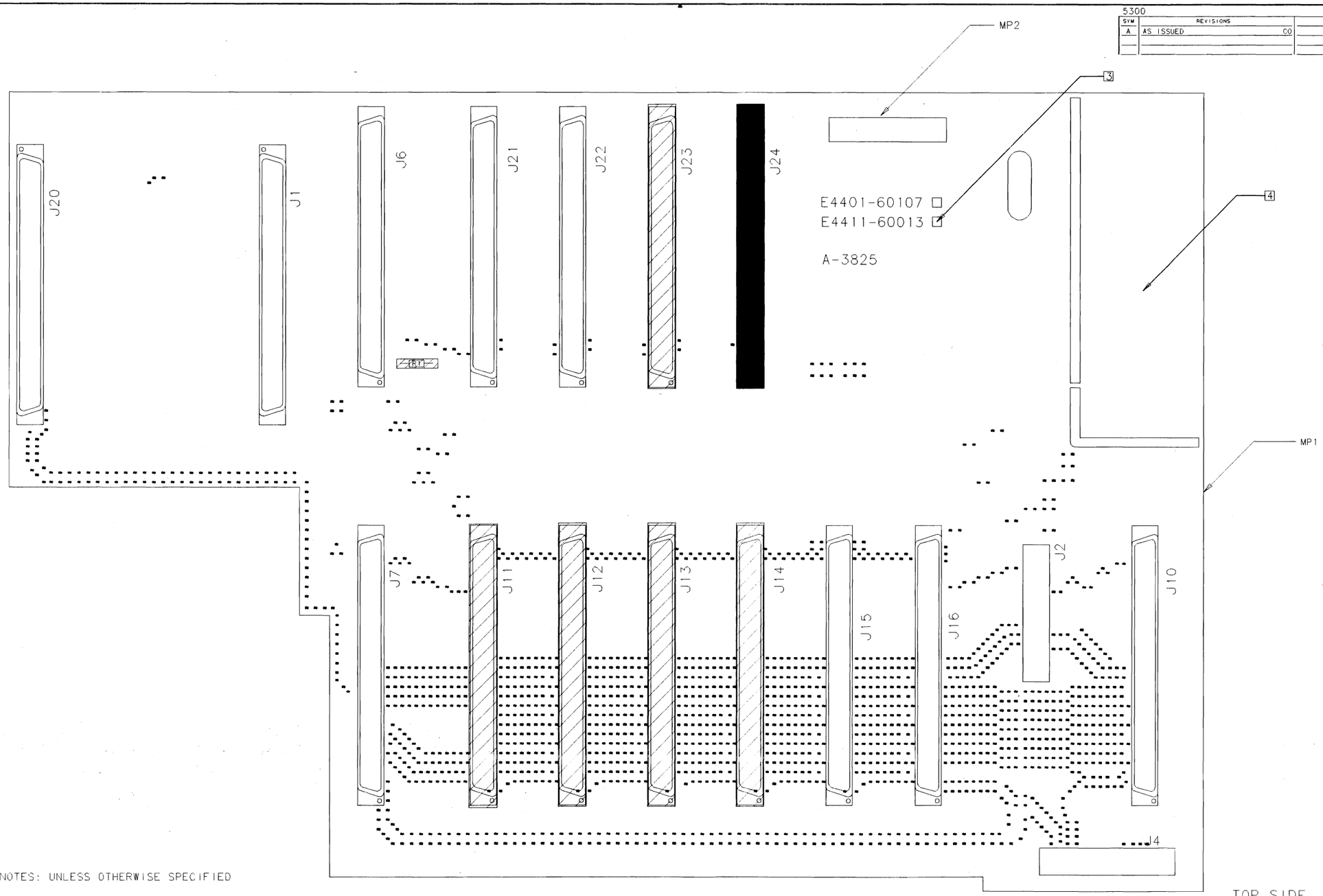

TOP SIDE

SEE MATERIAL LIST E4411-60013

NOTES: UNLESS OTHERWISE SPECIFIED

1. USE FABRICATED BOARD E4401-20107.
2. DO NOT LOAD CROSSHATCHED ////// COMPONENTS.
3. WITH PERMANENT MARKER, CHECK BOX LABEL E4411-60013.
4. AFTER FINAL ASSEMBLY, REMOVE RACKING TAB.

HP PROPRIETARY
THIS DOCUMENT CONTAINS CONFIDENTIAL, PROPRIETARY INFORMATION THAT IS HEWLETT-PACKARD (HP) PROPERTY. DO NOT DISCLOSE TO OR DUPLICATE FOR OTHERS EXCEPT AS AUTHORIZED BY HP

UNLESS OTHERWISE SPECIFIED, DIMENSIONS ARE IN INCHES.
TOLERANCES: XX .XX .010, XX.XX .02
THIRD ANGLE PROJECTION
DO NOT SCALE THIS DRAWING

DRAWN BY — DATE
ENGINEER/CHECKER — DATE
RELEASE TO PROD. — DATE
SUPERSEDES DWG

TITLE: ASSEMBLY, PWB MOTHER BOARD

MENTOR FILENAME
SCALE NONE
SHEET 1 OF 1
HEWLETT PACKARD
E4411-60013
PART NUMBER
D-E4411-60013-2

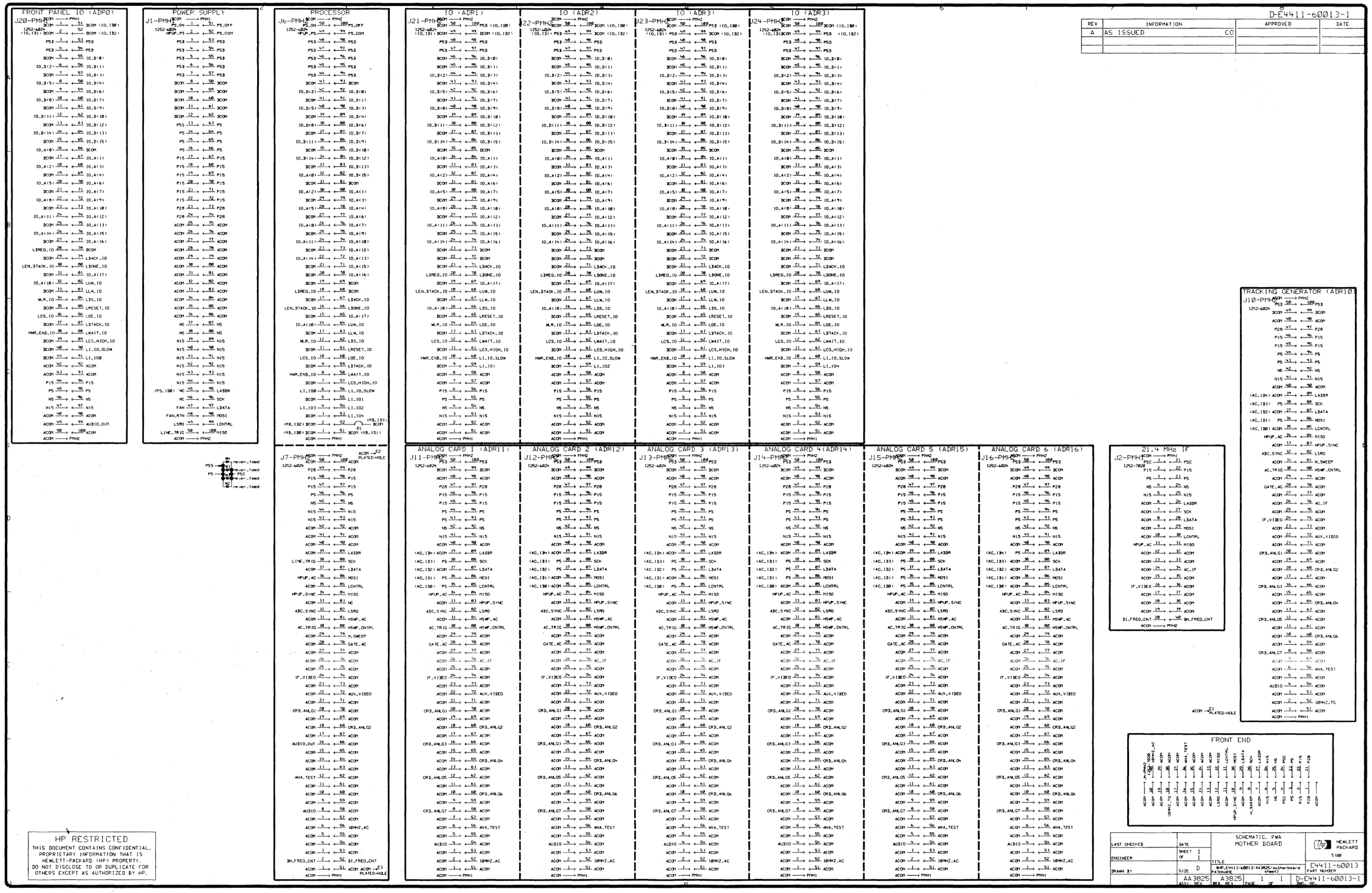
FRONT PANEL IO (ADR0)
POWER SUPPLY
PROCESSOR
IO (ADR1)
IO (ADR2)
IO (ADR3)
IO (ADR3)
TRACKING GENERATOR (ADR10)
21.4 MHz IF
ANALOG CARD 1 (ADR11)
ANALOG CARD 2 (ADR12)
ANALOG CARD 3 (ADR13)
ANALOG CARD 4 (ADR14)
ANALOG CARD 5 (ADR15)
ANALOG CARD 6 (ADR16)
FRONT END
HP RESTRICTED
THIS DOCUMENT CONTAINS CONFIDENTIAL, PROPRIETARY INFORMATION THAT IS HEWLETT-PACKARD (HP) PROPERTY. DO NOT DISCLOSE TO OR DUPLICATE FOR OTHERS EXCEPT AS AUTHORIZED BY HP.
D-E4411-60013-1
REV | INFORMATION | APPROVED | DATE
A | AS ISSUED CO
LAST CHECKED
ENGINEER
DRAWN BY
DATE
SHEET 1 OF 1
SIZE D
SCHEMATIC, PWA MOTHER BOARD
HEWLETT PACKARD
5100
E4411-60013
AA3825
A3825
PAGE 1 OF 1
D-E4411-60013-1