Printed by unregistered copy of WEBPlotter

08/24/95		D-E4401-60004
REV	INFORMATION	APPROVED	DATE
XX	PRODUCTION PILOT	PAT BROWN	05/09/96
XX	NOTE	NAME	MM/DD/YY
XX	NOTE	NAME	MM/DD/YY

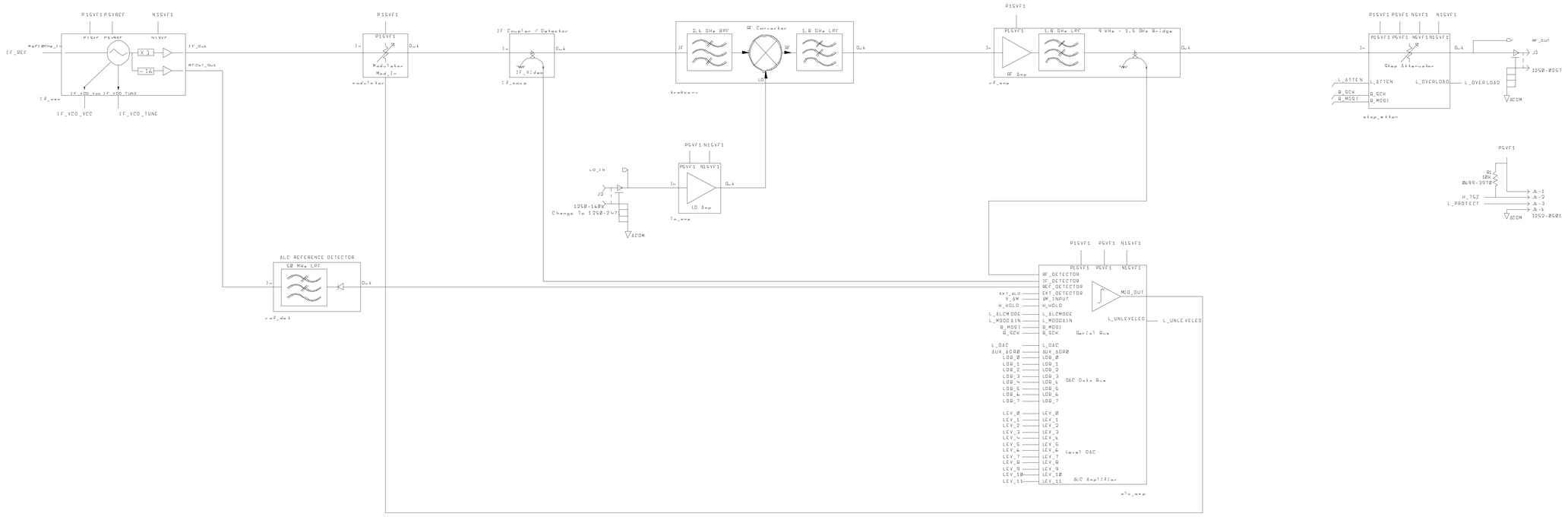

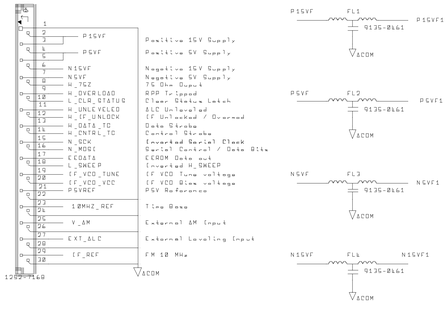

Measurement Conditions
Frequency: 50 MHz CW
Amplitude: -10 dBm
Output Atten: 0dB
Modulation: Off
Room Temp: 25 Deg C

Test Points
TP nnn-nnn

Reference Designators
RF Name
DR: Name
DD: Name
FL1-FL4
J1-J4
LT Name
Q1, Q2-Q21
R1
U# Name

U1 (SCSI NOT USED)
DS1554W-085/EEM3-DS2...
CR19 ->
DD3 ->
FL13 -> FL20
J5 ->
L5 ->
Q22 -> Q24
R2,R91,R137,R169->R3...
UN2 -> U44

HP PROPRIETARY
THIS DOCUMENT CONTAINS CONFIDENTIAL, PROPRIETARY INFORMATION THAT IS HEWLETT-PACKARD (HP) PROPERTY
DO NOT DISCLOSE TO OR DUPLICATE FOR OTHERS EXCEPT AS AUTHORIZED BY HP

5/15/96 11:01:26 LAST CHECKED	08/24/95 DATE	SCHEMATIC, PA6 TRACKING SOURCE RF BOARD	HEWLETT PACKARD
PAT BROWN ENGINEER	SHEET 1 OF 1	TITLE	
PAT BROWN DRAWN BY	SIZE D	/users/hpeadc2/path/rgn/rrrrrrrrr/hp/pa6a2/RF sheet1 PATHNAME	E4401-60004 PART NUMBER
	± ASSY. REV	± GRD. REV	PAGE 1 OF 11	D-E4401-60004 DWG. NO.

IF OSCILLATOR AND 50 MHZ ALC REFERENCE

REV	INFORMATION	APPROVED	DATE
XX	PRODUCTION PILOT	PAT BROWN	05/09/96
XX	NOTE	NAME	MM/DD/YY
XX	NOTE	NAME	MM/DD/YY

08/24/95 D-E4401-60004

LAST TN324

TP# : PM062040 VIA
GND: PM080056 VIA

HP PROPRIETARY
THIS DOCUMENT CONTAINS CONFIDENTIAL,
PROPRIETARY INFORMATION THAT IS
HEWLETT-PACKARD (HP) PROPERTY
DO NOT DISCLOSE TO OR DUPLICATE FOR
OTHERS EXCEPT AS AUTHORIZED BY HP

5/15/96 11:05:21 LAST CHECKED	08/24/95 DATE	SCHEMATIC, PWA TRACKING SOURCE RF BOARD IF OSCILLATOR	HEWLETT PACKARD
WING MAR / PAT BROWN ENGINEER	SHEET 1 OF 1	TITLE	E4401-60004 PART NUMBER
WING MAR / PAT BROWN DRAWN BY	D SIZE	PAGE 2 OF 11	D-E4401-60004 DWG. NO.

Printed by unregistered copy of WEBPlotter

Printed by unregistered copy of WEBPlotter

08/24/95 B-E4401-60004

REV	INFORMATION	APPROVED	DATE
XX	PRODUCTION PILOT	PAT BROWN	05/09/96
XX	NOTE	NAME	MM/DD/YY
XX	NOTE	NAME	MM/DD/YY

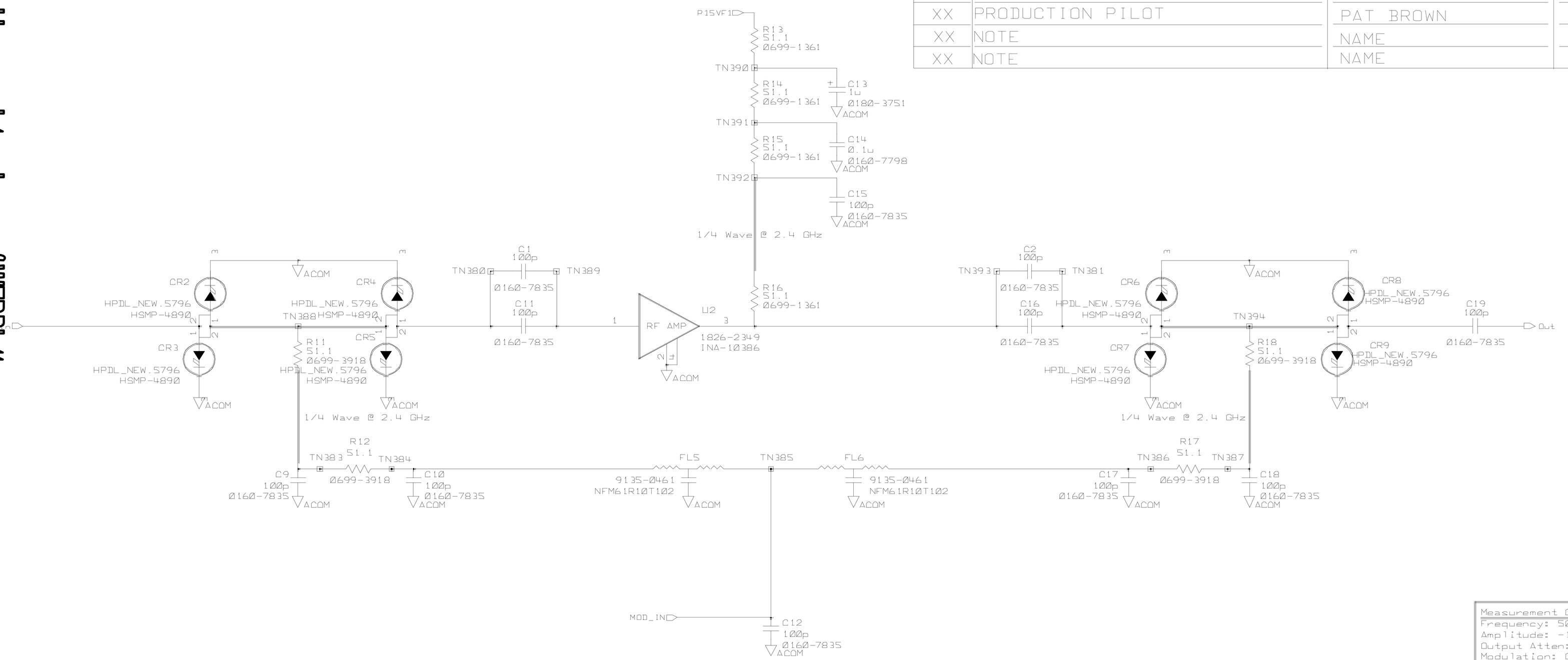

Measurement Conditions
Frequency: 50 MHz CW
Amplitude: -10 dBm
Output Atten: 0dB
Modulation: Off
Room Temp ~25 Deg C

Test Points
TP xxx-xxx
TN379-TN394

Reference Designators:
C1-C2,C9-C19
CR2-CR9
DS: None
FL5-FL6
J: None
L: None
Q: None
R11-R18
U2

HP PROPRIETARY
THIS DOCUMENT CONTAINS CONFIDENTIAL, PROPRIETARY INFORMATION THAT IS HEWLETT-PACKARD (HP) PROPERTY. DO NOT DISCLOSE TO OR DUPLICATE FOR OTHERS EXCEPT AS AUTHORIZED BY HP.

5/15/96 11:02:57 LAST CHECKED	08/24/95 DATE	SCHEMATIC, PWA TRACKING SOURCE RF BOARD AMP MODULATOR TITLE	HEWLETT PACKARD
PAT BROWN ENGINEER	SHEET 1 OF 1		
PAT BROWN DRAWN BY	SIZE B	/users/hpsadr2/patb/mgc/mosquito/tg/proto2/modulator sheet1 PATHNAME	E4401-60004 PART NUMBER
	# ASSY. REV	# BRD. REV	3 11 PAGE OF	B-E4401-60004 DWG. NO.

Printed by unregistered copy of WEBPlotter

08/24/95 B-E4401-60004

REV	INFORMATION	APPROVED	DATE
XX	PRODUCTION PILOT	PAT BROWN	05/09/96
XX	NOTE	NAME	MM/DD/YY
XX	NOTE	NAME	MM/DD/YY

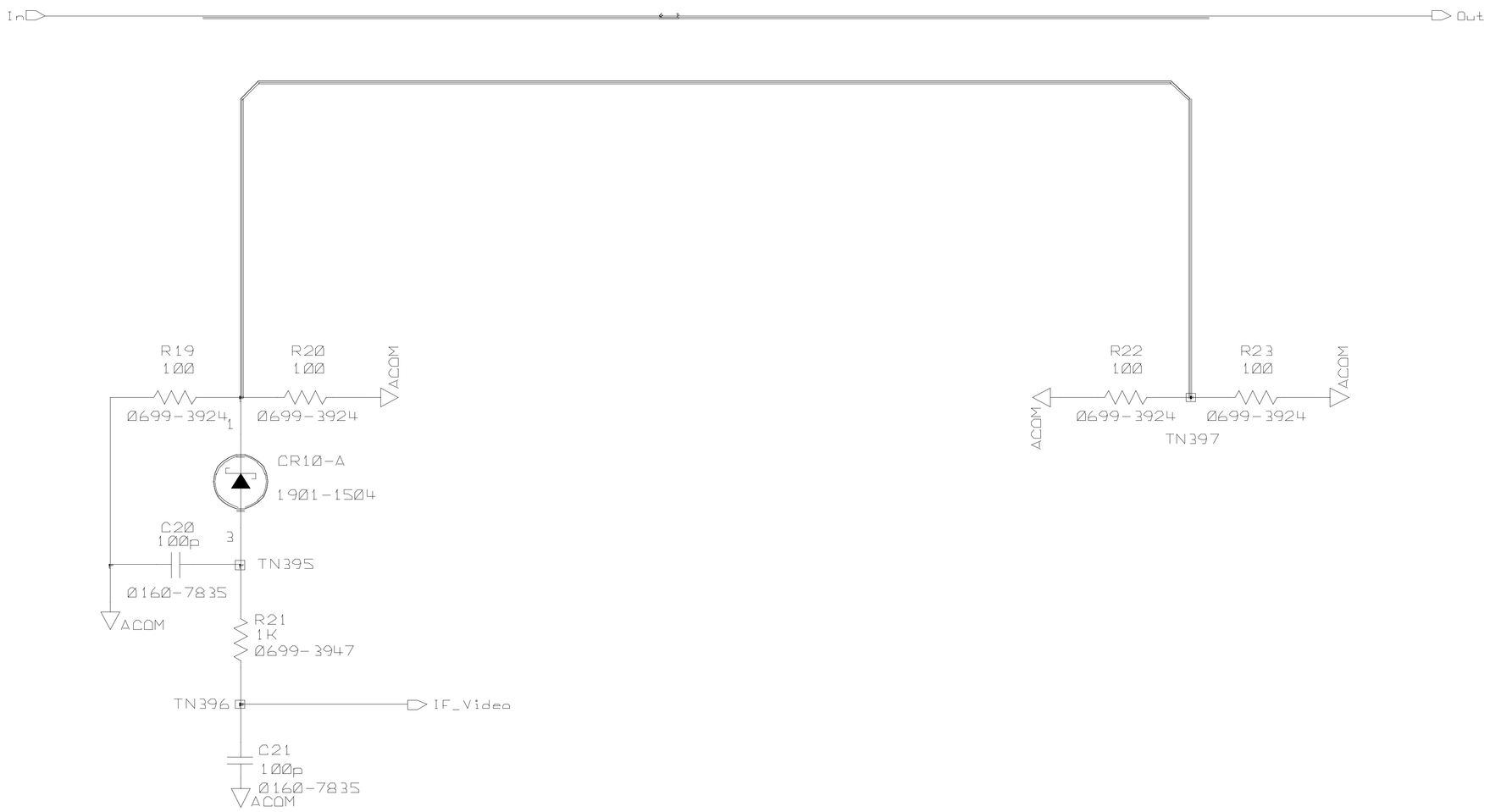

Measurement Conditions
Frequency: 50 MHz CW
Amplitude: -10 dBm
Output Atten: 0dB
Modulation: Off
Room Temp ~25 Deg C

Test Points
TP xxx-xxx
TN395-TN397

Reference Designators:
C20-C21
CR10
DS: None
FL: None
J: None
L: None
Q: None
R19-R23
U: None

HP PROPRIETARY
THIS DOCUMENT CONTAINS CONFIDENTIAL, PROPRIETARY INFORMATION THAT IS HEWLETT-PACKARD (HP) PROPERTY. DO NOT DISCLOSE TO OR DUPLICATE FOR OTHERS EXCEPT AS AUTHORIZED BY HP.

5/15/96 11:08:02 LAST CHECKED	08/24/95 DATE	SCHEMATIC, PWA TRACKING SOURCE RF BOARD IF COUPLER / DET TITLE	HEWLETT PACKARD
PAT BROWN ENGINEER	SHEET 1 OF 1		
PAT BROWN DRAWN BY	B SIZE	/users/hpsadr2/patb/mgc/mosquito/tg/proto2/if_coup sheet1 PATHNAME	E4401-60004 PART NUMBER
	# ASSY. REV	# BRD. REV	4 11 PAGE OF	B-E4401-60004 DWG. NO.

Printed by unregistered copy of WEBPlotter

08/24/95			B-E4401-60004
REV	INFORMATION	APPROVED	DATE
XX	PRODUCTION PILOT	PAT BROWN	05/09/96
XX	NOTE	NAME	MM/DD/YY
XX	NOTE	NAME	MM/DD/YY

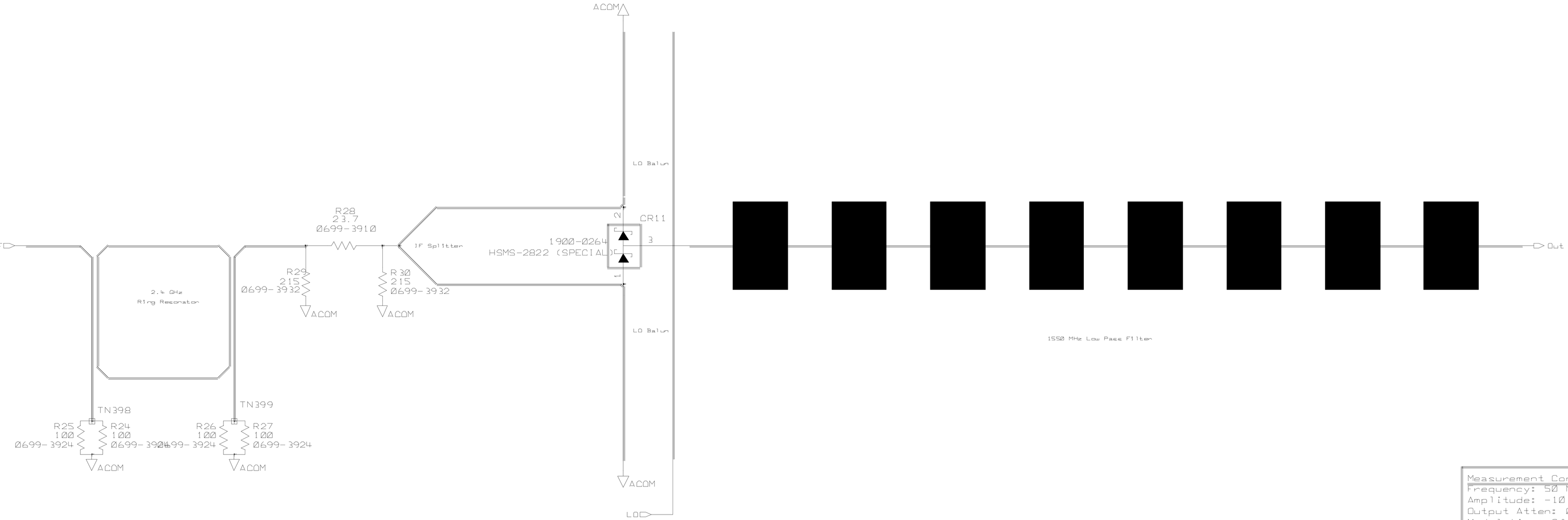

Measurement Conditions
Frequency: 50 MHz CW
Amplitude: -10 dBm
Output Atten: 0dB
Modulation: Off
Room Temp ~25 Deg C

Test Points
TP xxx-xxx
TN398-TN399

Reference Designators:
C: None
CR11
DS: None
FL: None
J: None
L: None
Q: None
R24- R30
U: None

HP PROPRIETARY
THIS DOCUMENT CONTAINS CONFIDENTIAL, PROPRIETARY INFORMATION THAT IS HEWLETT-PACKARD (HP) PROPERTY. DO NOT DISCLOSE TO OR DUPLICATE FOR OTHERS EXCEPT AS AUTHORIZED BY HP.

5/15/96 11:10:02 LAST CHECKED	08/24/95 DATE	SCHEMATIC, PWA TRACKING SOURCE RF BOARD RF CONVERTER	HEWLETT PACKARD
PAT BROWN ENGINEER	SHEET 1 OF 1	TITLE	
PAT BROWN DRAWN BY	SIZE B	/users/hpsadr2/patb/mgc/mosquito/tg/proto2/trakconv sheet1 PATHNAME	E4401-60004 PART NUMBER
	ASSY. REV #	BRD. REV # / PAGE 5 OF 11	B-E4401-60004 DWG. NO.

Printed by unregistered copy of WEBPlotter

08/24/95		B-E4401-60004	
REV	INFORMATION	APPROVED	DATE
XX	PRODUCTION PILOT	PAT BROWN	05/09/96
XX	NOTE	NAME	MM/DD/YY
XX	NOTE	NAME	MM/DD/YY

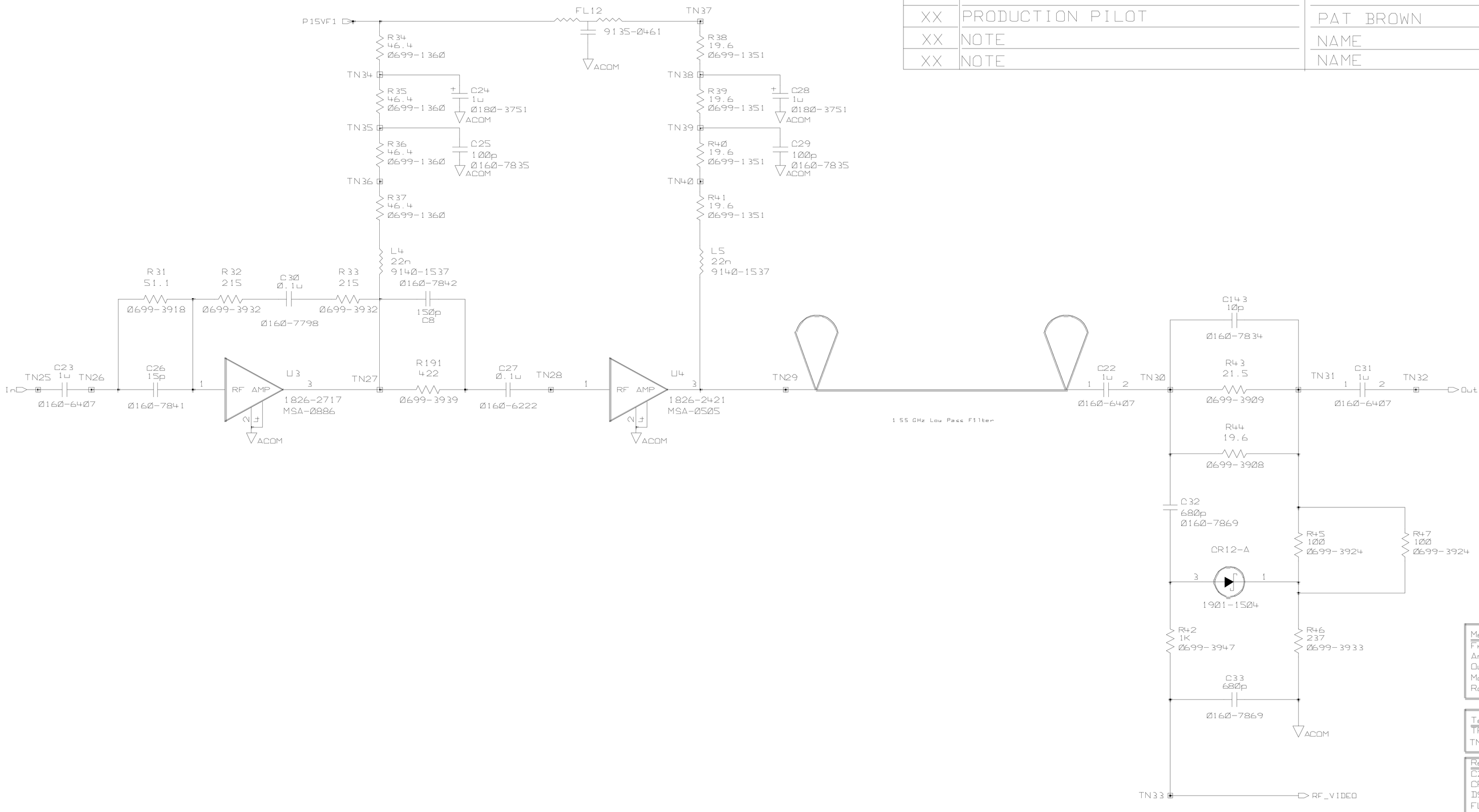

Measurement Conditions
Frequency: 50 MHz CW
Amplitude: -10 dBm
Output Atten: 0dB
Modulation: Off
Room Temp ~25 Deg C

Test Points
TP xxx-xxx
TN25-TN40

Reference Designators:
C22-C33
CR12
DS: None
FL12
J: None
L4-L5
Q: None
R34-R47
U3-U4

HP PROPRIETARY

THIS DOCUMENT CONTAINS CONFIDENTIAL, PROPRIETARY INFORMATION THAT IS HEWLETT-PACKARD (HP) PROPERTY. DO NOT DISCLOSE TO OR DUPLICATE FOR OTHERS EXCEPT AS AUTHORIZED BY HP.

5/15/96 11:12:16 LAST CHECKED	08/24/95 DATE	SCHEMATIC, PWA TRACKING SOURCE RF Board RF Amplifier / RF Bridge TITLE	HEWLETT PACKARD
PAT BROWN ENGINEER	SHEET 1 OF 1		
PAT BROWN DRAWN BY	SIZE B	/users/hpsadr2/patb/mgc/mosquito/tg/proto2/rf_amp sheet1 PATHNAME	E4401-60004 PART NUMBER
	ASSY. REV #	BRD. REV # / PAGE 6 OF 11	B-E4401-60004 DWG. NO.

Printed by unregistered copy of WEBPLOT#

	08/24/95	D-E4401-60004
REV	INFORMATION	APPROVED	DATE
XX	PRODUCTION PILOT	PAT BROWN	05/09/96
XX	NOTE	NAME	MM/DD/YY
XX	NOTE	NAME	MM/DD/YY

Attenuator Drive Table

L_ATN_x	N_VCx	VCx	ATTEN
Hi (+5)	0 V	-5 V	0 dB
Lo (0)	-5 V	0 V	-X dB

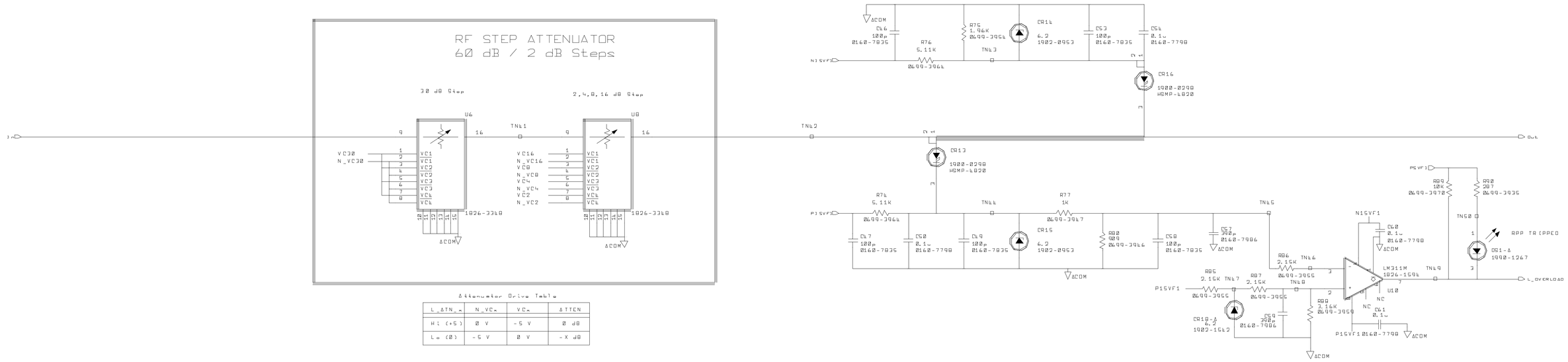

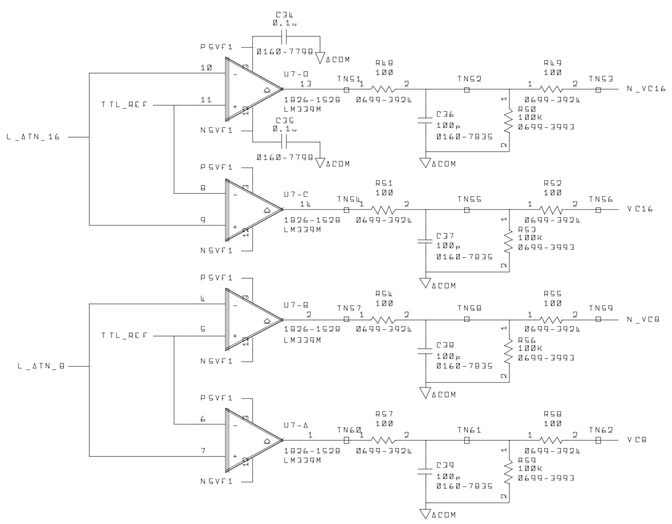

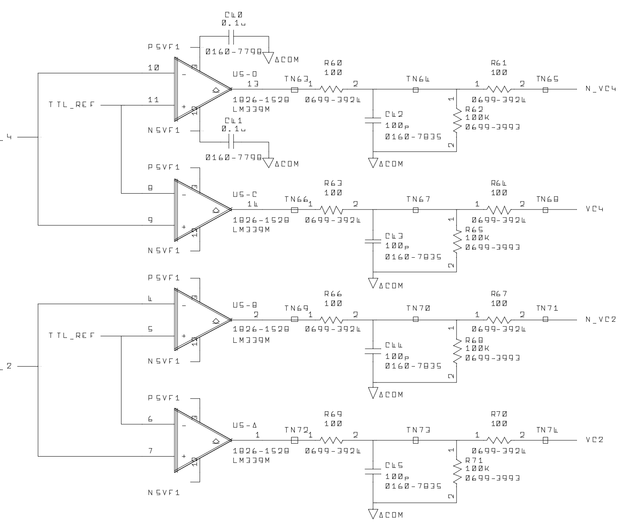

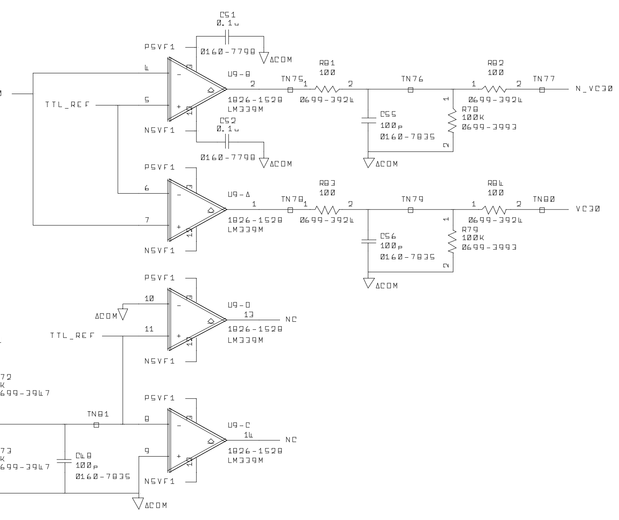

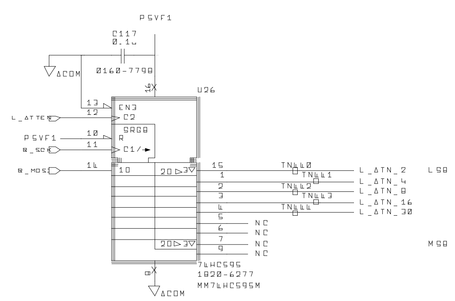

Measurement Conditions
Frequency: 50 MHz
Amplitude: -10 dBm
Output Atten: 0dB
Modulation: Off
Room Temp: 25 Deg C

Test Points
Top-to-bottom
TN41-TN81

Reference Designators
Symbols Used
CR13-CR16,CR18
DS1
Ftr Name
Jx Name
Lx Name
Qx Name
R48-R98
U5-U10, U24

HP PROPRIETARY
THIS DOCUMENT CONTAINS CONFIDENTIAL, PROPRIETARY INFORMATION THAT IS HEWLETT-PACKARD (HP) PROPERTY. DO NOT DISCLOSE TO OR DUPLICATE FOR OTHERS EXCEPT AS AUTHORIZED BY HP.

5/15/96 11:14:01 LAST CHECKED	08/24/95 DATE	SCHEMATIC, PA8 TRACKING SOURCE RF BOARD RF ATTEN/LIMITER	HEWLETT PACKARD
PAT BROWN ENGINEER	SHEET 1 OF 1		
PAT BROWN DRAWN BY	SIZE D	TITLE /users/hpesds2/pathrage/resources/4g/proto27/absorption sheet1 PATHNAME	E4401-60004 PART NUMBER
	ASSY. REV.	BRD. REV.	PAGE 7 OF 11	D-E4401-60004 DWG. NO.

Printed by unregistered copy of WEBplotter

	08/24/95		B-E4401-60004
REV	INFORMATION	APPROVED	DATE
XX	PRODUCTION PILOT	PAT BROWN	05/09/96
XX	NOTE	NAME	MM/DD/YY
XX	NOTE	NAME	MM/DD/YY

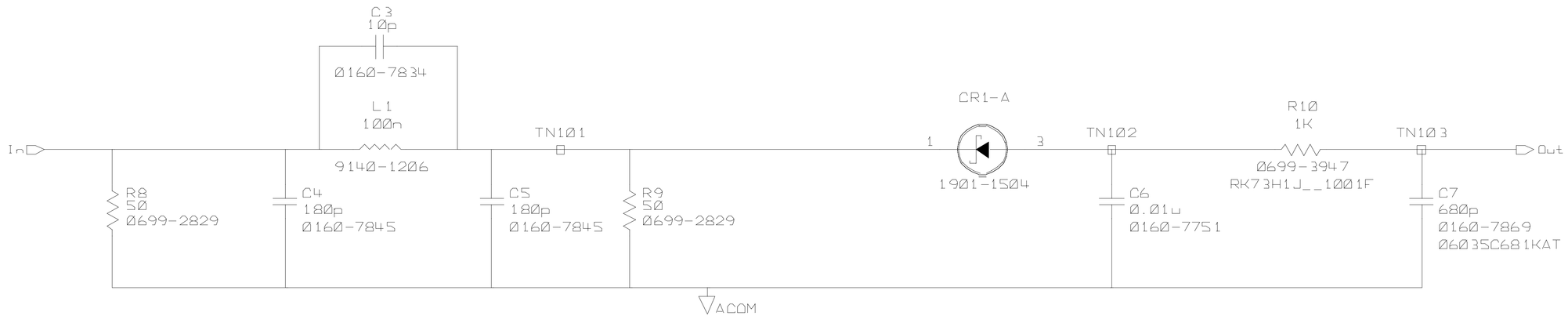

Measurement Conditions
Frequency: 50 MHz CW
Amplitude: -10 dBm
Output Atten: 0dB
Modulation: Off
Room Temp ~25 Deg C

Test Points
TP xxx-xxx
TN101-TN103

Reference Designators:
C3-C7
CR1
DS: None
FL: None
J: None
L1
O: None
R9-R10
U: None

HP PROPRIETARY
THIS DOCUMENT CONTAINS CONFIDENTIAL, PROPRIETARY INFORMATION THAT IS HEWLETT-PACKARD (HP) PROPERTY. DO NOT DISCLOSE TO OR DUPLICATE FOR OTHERS EXCEPT AS AUTHORIZED BY HP.

5/15/96 11:18:19 LAST CHECKED	08/24/95 DATE	SCHEMATIC, PWA TRACKING SOURCE RF BOARD ALC REFERENCE	HEWLETT PACKARD
PAT BROWN ENGINEER	SHEET 1 OF 1	TITLE	
PAT BROWN DRAWN BY	SIZE B	/users/hpsadr2/patb/mgc/mosquito/tg/proto2/ref_det sheet1 PATHNAME	E4401-60004 PART NUMBER
	ASSY. REV #	BRD. REV # / PAGE 8 OF 11	B-E4401-60004 DWG. NO.

Printed by unregistered copy of WEBPlotter

	08/24/95		D-E4401-60004
REV	INFORMATION	APPROVED	DATE
XX	PRODUCTION PILOT	PAT BROWN	05/09/96
XX	NOTE	NAME	MM/DD/YY
XX	NOTE	NAME	MM/DD/YY

ALC Detector Selection

Dual Slope Logger

Logged Detector Output

ALC Loop Integrator

Loop Status

PIN Modulator Driver

Modulator Drive

Level Control Voltage

FET Control Voltage (Vgs)
0 V = On
-10 V = Off

Measurement Conditions
Frequency 50 MHz CW
Amplitude -10 dBm
Output Atten= 0dB
Modulation: Off
Room Temp = 25 Deg C

Test Points
TP1 thru TP20
TN1 - TN179

Reference Designators
DS1-11,116,118-119,121-126,132-132,134,138-139
CR1 None
DS2
FL9-FL11
J1 None
L1, 28-021
R113-R181,R192
U11-U23,26,31-33,39-41
NOT USED:

HP PROPRIETARY
THIS DOCUMENT CONTAINS CONFIDENTIAL, PROPRIETARY INFORMATION THAT IS HEWLETT-PACKARD (HP) PROPERTY
DO NOT DISCLOSE TO OR DUPLICATE FOR OTHERS EXCEPT AS AUTHORIZED BY HP

5/15/96 11:20:40	08/24/95	SCHEMATIC, PM4 TRACKING SOURCE ALC AMPLIFIER	HEWLETT PACKARD
LAST CHECKED	DATE		
PAT BROWN	SHEET 1		
ENGINEER	OF 1		
PAT BROWN	SIZE D	/users/hpesdc2/path/eqn/resource/sp/proto2/alc_amp sheet1	E4401-60004
DRAWN BY		PATHNAME	PART NUMBER
	± ASSY. REV	± BRD. REV	PAGE 9 OF 11 D-E4401-60004 DWG. NO.

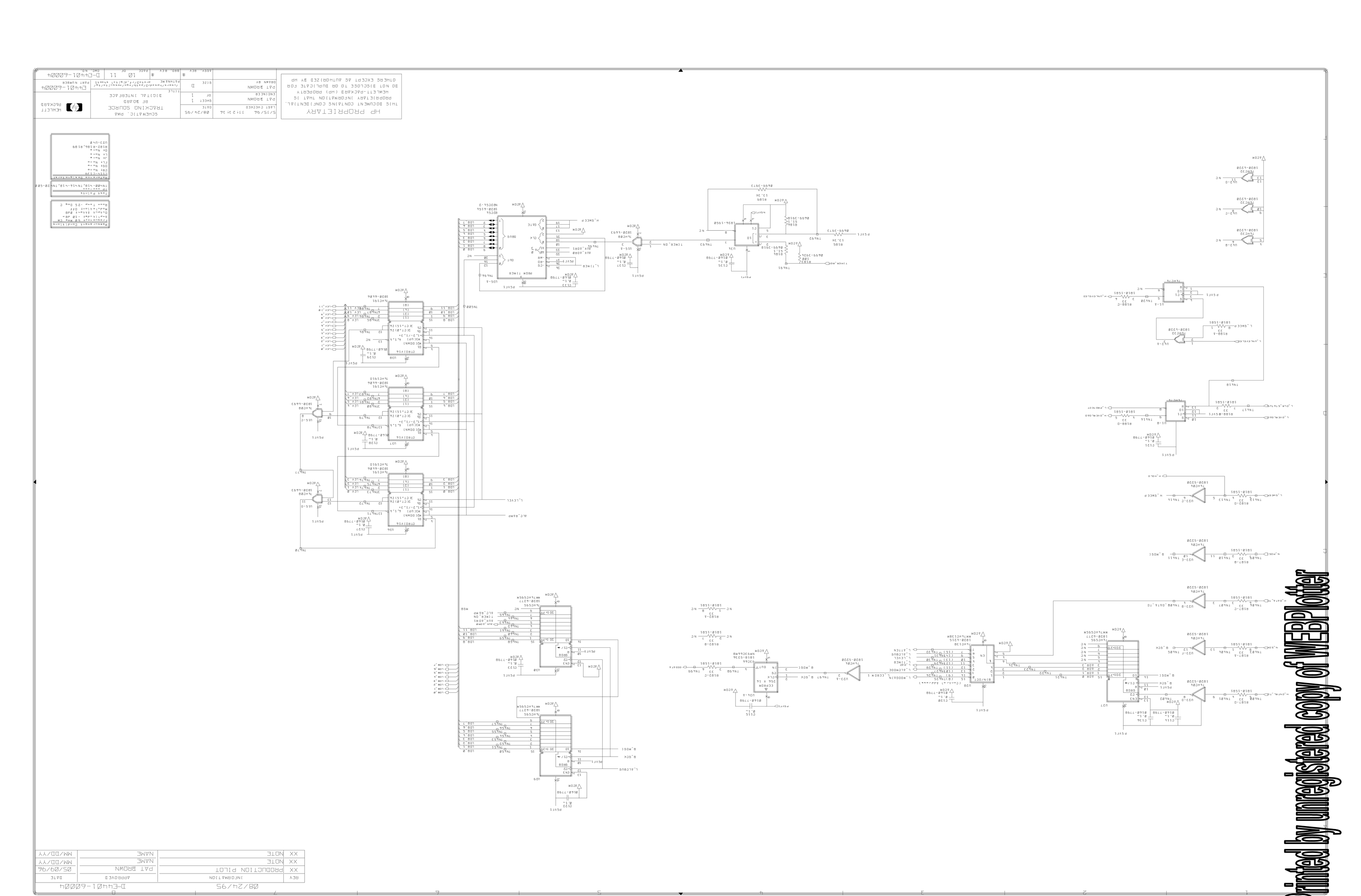
HP PROPRIETARY
THIS DOCUMENT CONTAINS CONFIDENTIAL
PROPRIETARY INFORMATION THAT IS
TO BE DISCLOSED TO OR DUPLICATED FOR
OTHERS EXCEPT AS AUTHORIZED BY HP
SCHEMATIC, PWA
TRACKING SOURCE
BIDIRL INTERFACE
D-E4440-60004
08/24/95
05/09/96
PRODUCTION PILOT
PAT BROWN
XX
NOTE
NAME
MM/DD/YY
REV
APPROVED
DATE
LEXMARK
RF BOARD
PAT BROWN
SHEET 1 OF 1
SIZE D
ASSY QTY *
BOM QTY *
ORG NO.
LAST CHECKED 5/15/96 11:23:36
DATE
CHECKED
DRAWN BY
PAT BROWN
PART NUMBER
D-E4440-60004
REV 10 11
Users\Temp\Schematic_Pwa\Pat_Brown\
D:\TRACK.SCH
Power Supply Decoupling
Dual 5 Volt Regulator
Dual 3.3 Volt Regulator
Quad 5 Volt Buffer
Quad Transceiver
Octal Buffer
Octal Latch
Octal Flip-Flop
Octal Transceiver
Octal Transceiver
Octal Transceiver
Octal Transceiver
Printed by unregistered copy of WEBPlotter

Printed by unregistered copy of WEBPlotter

REV	INFORMATION	APPROVED	DATE
XX	PRODUCTION PILOT	PAT BROWN	05/09/96
XX	NOTE	NAME	MM/DD/YY
XX	NOTE	NAME	MM/DD/YY

08/24/95

B-E4401-60004

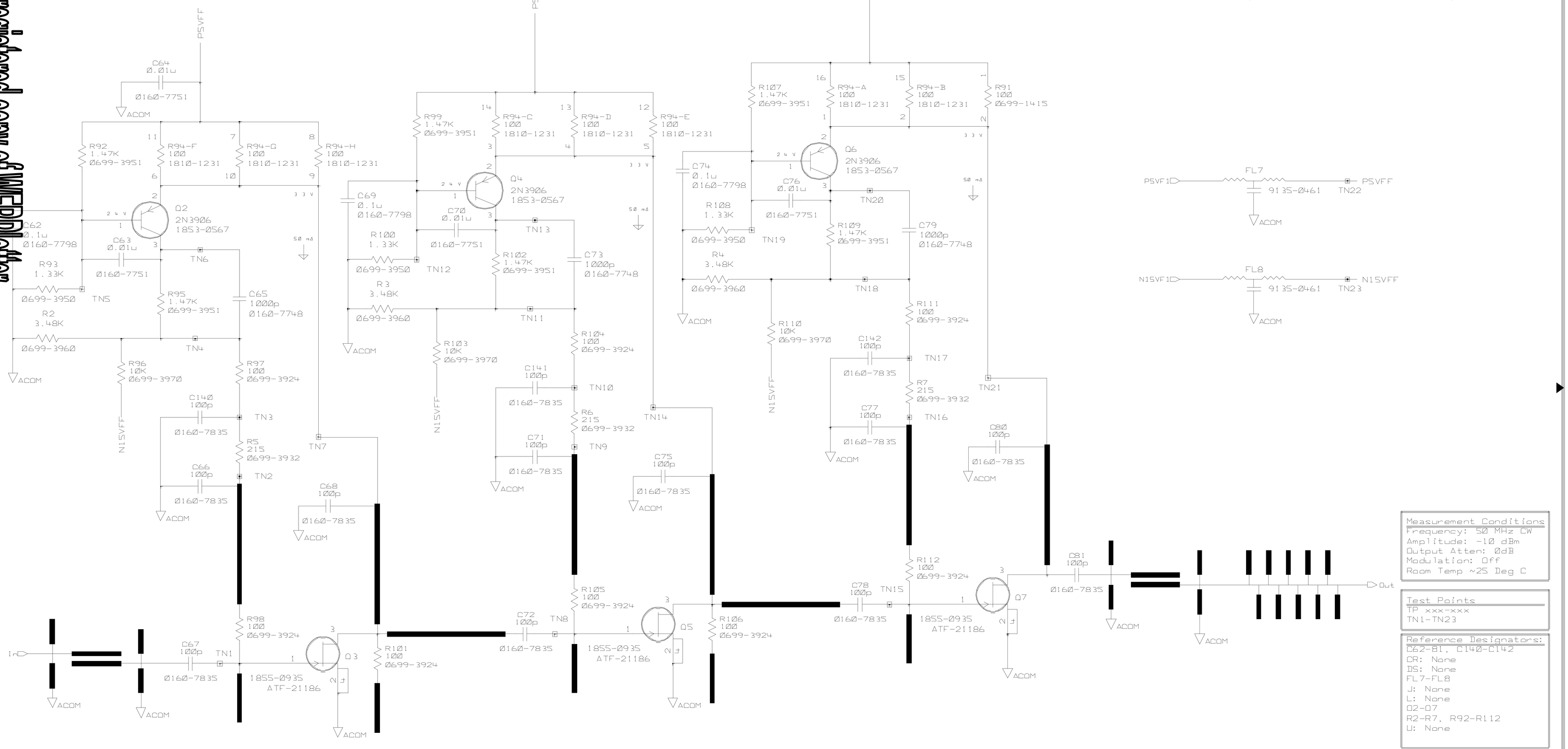

Measurement Conditions
Frequency: 50 MHz CW
Amplitude: -10 dBm
Output Atten: 0dB
Modulation: Off
Room Temp ~25 Deg C

Test Points
TP xxx-xxx
TN1-TN23

Reference Designators:
C62-81, C140-C142
CR: None
DS: None
FL7-FL8
J: None
L: None
Q2-Q7
R2-R7, R92-R112
U: None

HP PROPRIETARY
THIS DOCUMENT CONTAINS CONFIDENTIAL, PROPRIETARY INFORMATION THAT IS HEWLETT-PACKARD (HP) PROPERTY. DO NOT DISCLOSE TO OR DUPLICATE FOR OTHERS EXCEPT AS AUTHORIZED BY HP.

5/15/96 11:25:44 LAST CHECKED	08/24/95 DATE	SCHEMATIC, PWA TRACKING SOURCE LO AMPLIFIER PAGE DESCRIPTION 2	HEWLETT PACKARD
PAT BROWN ENGINEER	SHEET 1 OF 1	TITLE	
PAT BROWN DRAWN BY	SIZE B	/users/hpsadr2/patb/mgc/mosquito/tg/proto2/lo_amp sheet1 PATHNAME	E4401-60004 PART NUMBER
	ASSY. REV #	BRD. REV # / PAGE 11 OF 11	B-E4401-60004 DWG. NO.

Printed by unregistered copy of WEBPlotter

5300 B-E4401-60005-1

SYM	REVISIONS	APPROVED	DATE
A	AS ISSUED /RO	PAT BROWN	9-3-96
B			

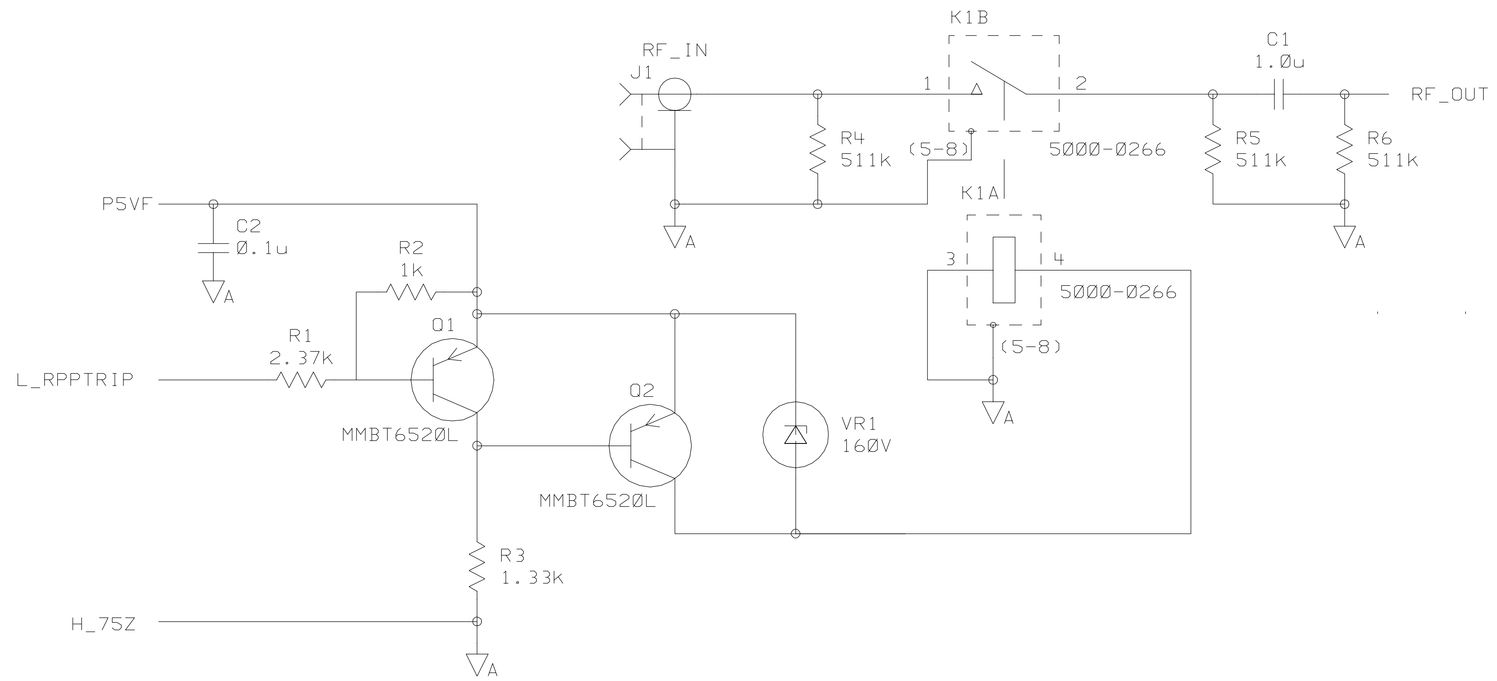

RAW BD = E4401-20005

AGILENT TECHNOLOGIES
RESTRICTED
THIS DOCUMENT CONTAINS CONFIDENTIAL, PROPRIETARY INFORMATION THAT IS AGILENT TECHNOLOGIES PROPERTY. DO NOT DISCLOSE TO OR DUPLICATE FOR OTHERS EXCEPT AS AUTHORIZED BY AGILENT TECHNOLOGIES.

PAT BROWN DRAWN BY	05/21/96 DATE
PAT BROWN ENGINEER/CHECKER	09/04/96 DATE
RELEASE TO PROD.	DATE
SUPERSEDES DWG.	

SCHEMATIC, PWA
TG BABY
TITLE

s1aea005 FILENAME	Agilent
NONE SCALE	
SHEET 1 OF 1	E4401-60005 PART NUMBER

B-E4401-60005-1

Printed by unregistered copy of WEBPlotter

5300 D-E4401-60004-2

SYM	REVISIONS	APPROVED	DATE
1	RELEASE TO PROTO /RO	BROWN	12-14-95
2	DATE CODE WAS A3550 /RO	BROWN	5-14-96

MP1

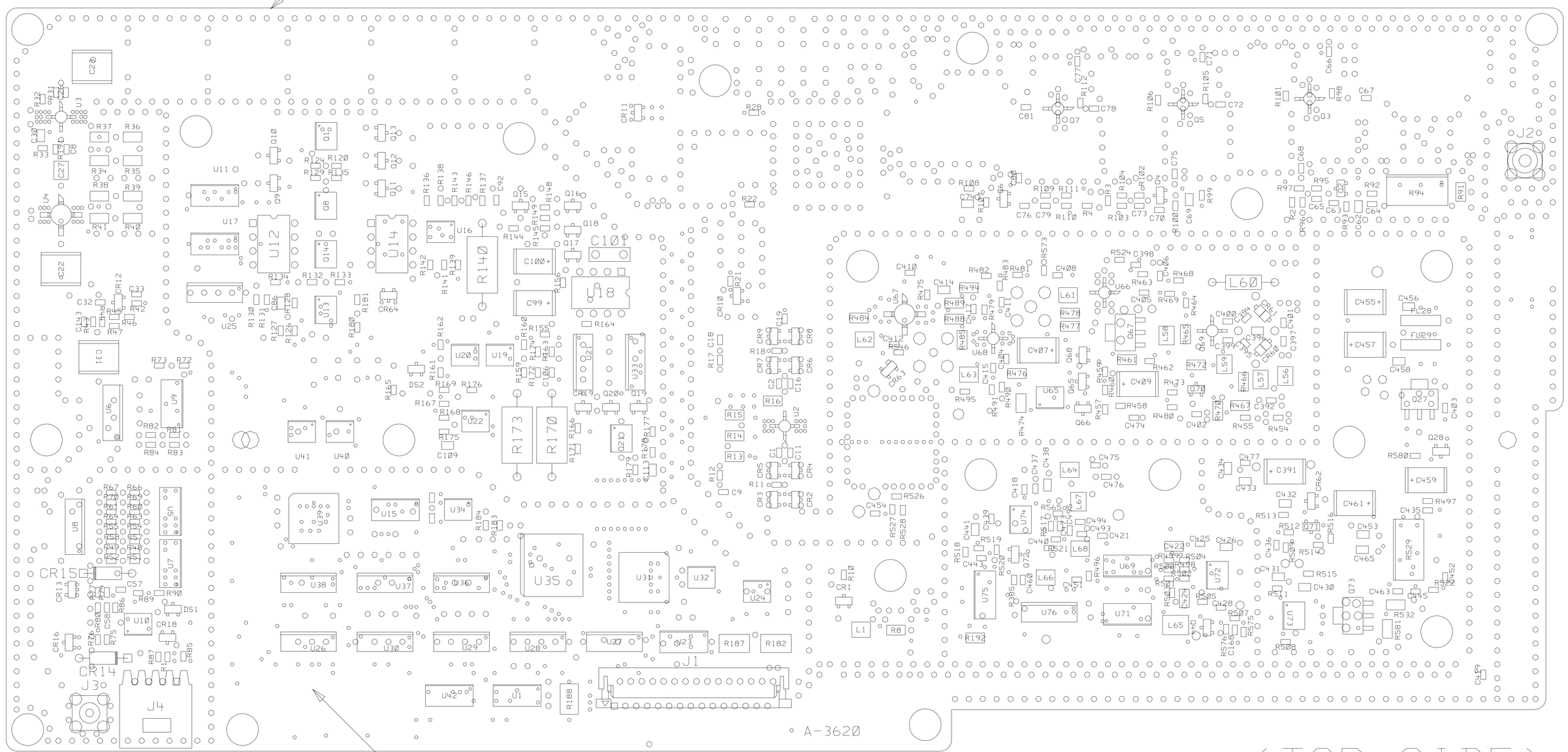

(TOP SIDE)

BARCODE

FOR MATERIAL LIST SEE E4401-60004

HP PROPRIETARY
THIS DOCUMENT CONTAINS CONFIDENTIAL, PROPRIETARY INFORMATION THAT IS HEWLETT-PACKARD (HP) PROPERTY. DO NOT DISCLOSE TO OR DUPLICATE FOR OTHERS EXCEPT AS AUTHORIZED BY HP.

UNLESS OTHERWISE SPECIFIED, DIMENSIONS ARE IN INCHES.	R ODAY DRAWN BY	12-14-95 DATE	ASSEMBLY, PWB SOURCE RF
TOLERANCES: XX.XXX ±.010 XX.XX ±.02	PAT BROWN ENGINEER/CHECKER	12-14-95 DATE	a1aea004 FILENAME
THIRD ANGLE PROJECTION	RELEASE TO PROD.	DATE	SCALE NONE
DO NOT SCALE THIS DRAWING	SUPERSEDES DWG.		SHEET 1 OF 2
			TITLE

HEWLETT PACKARD

E4401-60004 PART NUMBER

D-E4401-60004-2

Printed by unregistered copy of WEBPlotter

5300 D-E4401-60004-2

SYM	REVISIONS	APPROVED	DATE
1	SEE SHEET 1		

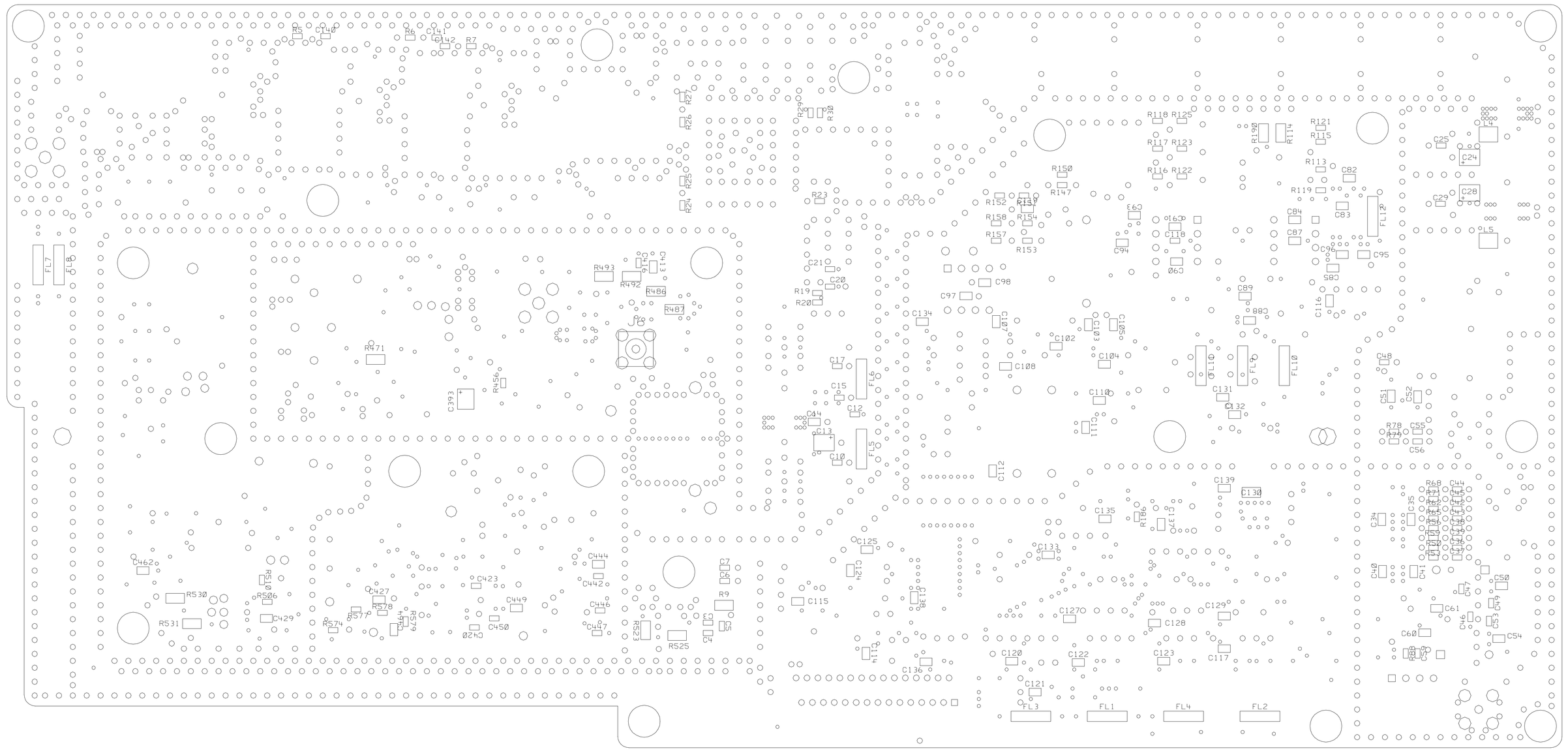

(BOTTOM SIDE)

HP PROPRIETARY
THIS DOCUMENT CONTAINS CONFIDENTIAL, PROPRIETARY INFORMATION THAT IS HEWLETT-PACKARD (HP) PROPERTY. DO NOT DISCLOSE TO OR DUPLICATE FOR OTHERS EXCEPT AS AUTHORIZED BY HP.

UNLESS OTHERWISE SPECIFIED, DIMENSIONS ARE IN INCHES.
TOLERANCES: XX.XXX ±.010 XX.XX ±.02
THIRD ANGLE PROJECTION
DO NOT SCALE THIS DRAWING

R ODAY	DRAWN BY	12-1-95 DATE
PAT BROWN	ENGINEER/CHECKER	12-1-95 DATE
	RELEASE TO PROD.	DATE
	SUPERSEDES DWG.	

TITLE: ASSEMBLY, PWB SOURCE RF

a6aea004 FILENAME
SCALE NONE
SHEET 2 OF 2
E4401-60004 PART NUMBER
D-E4401-60004-2

HEWLETT PACKARD

Printed by unregistered copy of WEEPolHeat

5300			D-E4401-20004-1
SYM	REVISIONS	APPROVED	DATE
1	RELEASE TO PROTO /RO	BROWN	12-14-95
2	DATE CODE WAS A3550 /RO	BROWN	5-14-96

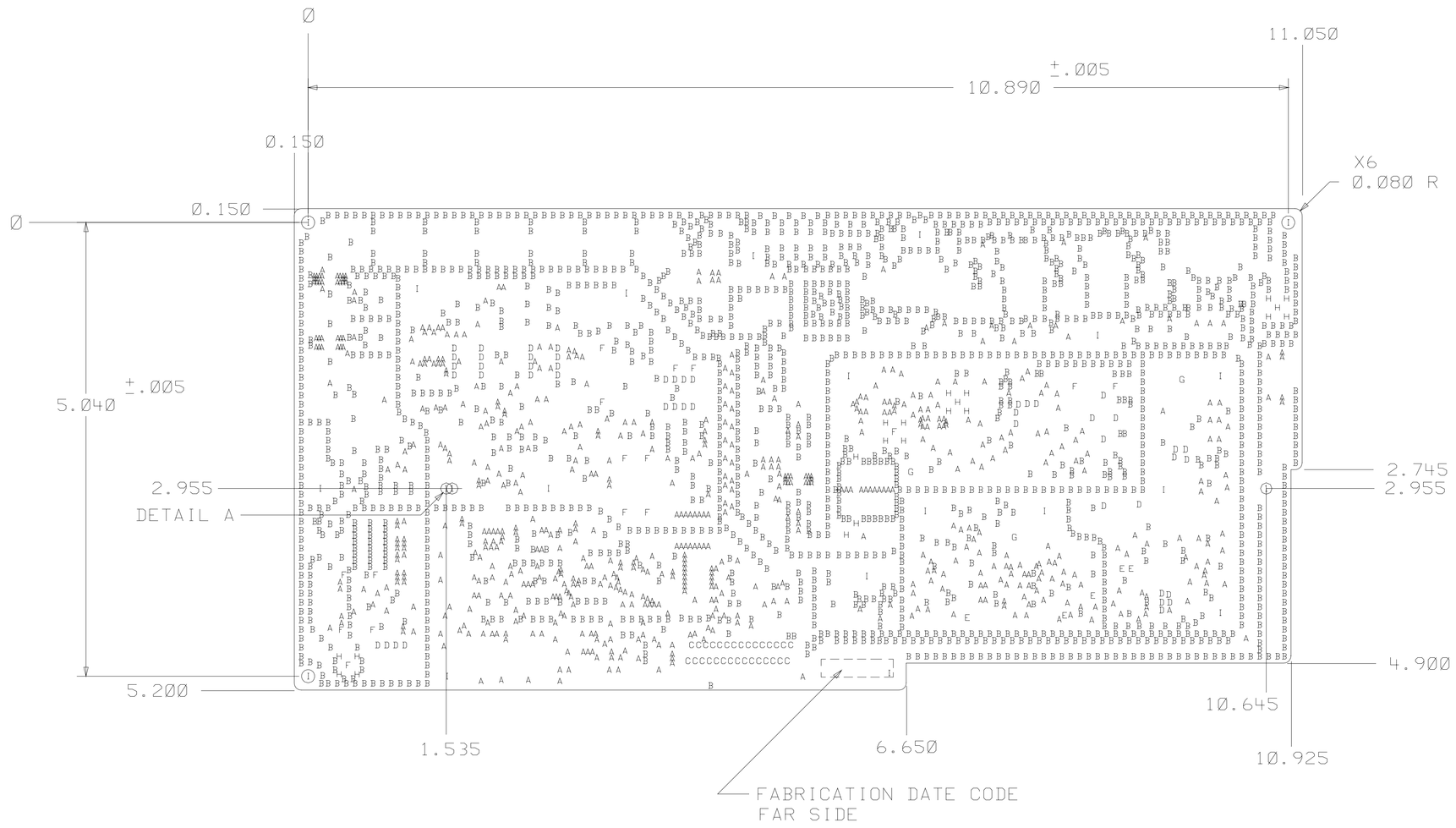

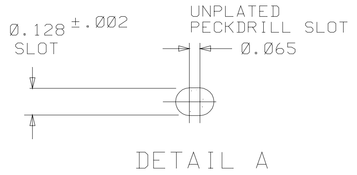

DETAIL A

RF/MICROWAVE PCB CONSTRUCTION

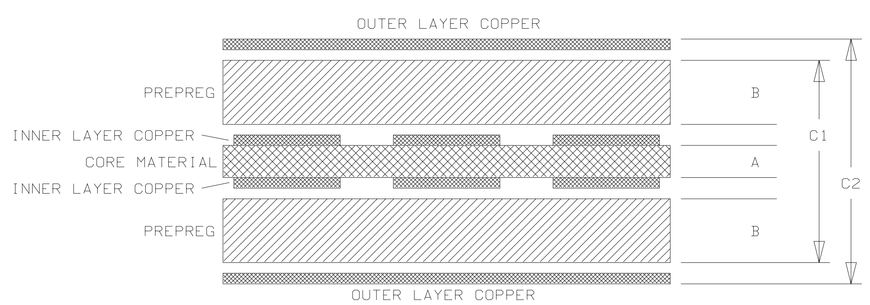

FINISHED PCB TOLERANCES

LAYER	DRAWING DESIGNATION	CONSTRUCTION	DIMENSION AND TOLERANCE
CORE	A	2 LAYERS OF 7628 GLASS	.014 +/-.0014
PREPREG	B	3 LAYERS OF 7628 GLASS	.021 +/-.002
INNER LAYER COPPER		1 OZ. FOIL	.00135 +/-.00015
OUTER LAYER COPPER		1/2 OZ. COPPER PLATED UP	.0025 +/-.0008
BOARD THICKNESS W/O OUTER COPPER	C1		.0587 +/-.0064
BOARD THICKNESS COPPER TO COPPER	C2		.0637 +/-.008
INNER LAYER COPPER LINE WIDTH			+/-.001
OUTER LAYER COPPER LINE WIDTH			+/-.0015

DETAIL B

MATERIAL HT2

FABRICATION INFORMATION (GENERAL): UNLESS OTHERWISE SPECIFIED

1 REFER TO HP DWG A-5951-1596-1 (400.410) FOR THE FOLLOWING: ☒ PC5

1.1 DESIGN CLASS: ☐ PC15 ☐ PC12 ☐ PC8 ☐ PC6 ☐ PC10

1.2 MATL. CONSTRUCTION DETAIL B ☐ FR4 ☐ DUROID ☐ TEFLON

SPECIAL REQUIREMENT: OUTER CLAD WT. 0.5OZ INNER CLAD WT. 1 OZ

1.3 PLATING TYPE 17

2 INSPECT TO HP DWG A-5951-1581-1 (400.430) P.C. ACCEPTABILITY

3 SOLDERMASK: SPECIAL REQUIREMENT _____

NO. OF MASK 2 ☒ COMPONENT SIDE ☒ SOLDER SIDE

4 GRAPHICS: WHITE ☒ COLOR ☐ _____

NO. OF MASK 2 ☒ COMPONENT SIDE ☒ SOLDER SIDE

5 BARE BOARD ELECTRICAL TEST: ☒ YES ☐ NO

☐ UNIVERSAL GRID (.100) ☒ DEDICATED FIXTURE

FABRICATION - HOLE REQUIREMENTS

6 FINISHED HOLE PLATING CODE : P - PLATED , U - UNPLATED

DRILL BOARD USING DATA ON NC DRILL TAPE DATED 5-6-96 , SUPPLIED BY DIVISION WITH ENGINEERING RESPONSIBILITY

SYM	FINISHED HOLE SIZE	FINISHED HOLE TOL.±	PLATING 6	QTY	SYM	FINISHED HOLE SIZE	FINISHED HOLE TOL.±	PLATING 6	QTY
A	0.012	0.003	P	678	I	0.146	0.003	P	19
B	0.019	0.003	P	1873	1	0.128	0.003	U	3
C	0.031	0.003	P	30					
D	0.037	0.003	P	48					
E	0.040	0.003	P	5					
F	0.046	0.003	P	16					
G	0.056	0.003	P	3					
H	0.064	0.003	P	21					

FABRICATION - BLANK REQUIREMENTS: UNLESS OTHERWISE SPECIFIED

7 0.062 MAXIMUM RADIUS PERMISSIBLE ON INSIDE AND OUTSIDE CORNERS

8 ALL ROUTED HOLES AND SLOTS ARE UNPLATED

9 DESIGN TECHNOLOGY: SMT6

10 FILM DATE CODE A-3620

11 BREAKOUT/TRACE WIDTH REDUCTION: WHEN REQUIRED TO MEET HP OR SUPPLIER SPECIFICATIONS, COPPER MAY BE ADDED TO PADS. THE ADDED COPPER SHALL EXTEND NO MORE THAN .005 INCHES BEYOND THE CURRENT PAD EDGE. FOLLOWING MODIFICATION A DRC SHALL BE RUN AND ANY VIOLATIONS DISCUSSED WITH THE RESPONSIBLE ENITY.

HP PROPRIETARY
THIS DOCUMENT CONTAINS CONFIDENTIAL. PROPRIETARY INFORMATION THAT IS HEWLETT-PACKARD (HP) PROPERTY. DO NOT DISCLOSE TO OR DUPLICATE FOR OTHERS EXCEPT AS AUTHORIZED BY HP.

UNLESS OTHERWISE SPECIFIED, DIMENSIONS ARE IN INCHES.
TOLERANCES: XX.XXX ±.010 XX.XX ±.02
THIRD ANGLE PROJECTION
DO NOT SCALE THIS DRAWING

R ODAY DRAWN BY	12-14-95 DATE
PAT BROWN ENGINEER/CHECKER	12-14-95 DATE
RELEASE TO PROD.	DATE
SUPERSEDES DWG.	

TITLE: DRILL/BLANK, PWB SOURCE RF

FILENAME	flaea004
SCALE	NONE
SHEET 1 OF 1	E4401-20004 PART NUMBER

HEWLETT PACKARD

D-E4401-20004-1

Printed by unregistered copy of WEBPlotter

5300 C-E4401-60005-2

SYM	REVISIONS	APPROVED	DATE
A	AS ISSUED /RO	BROWN	9-3-96
B			

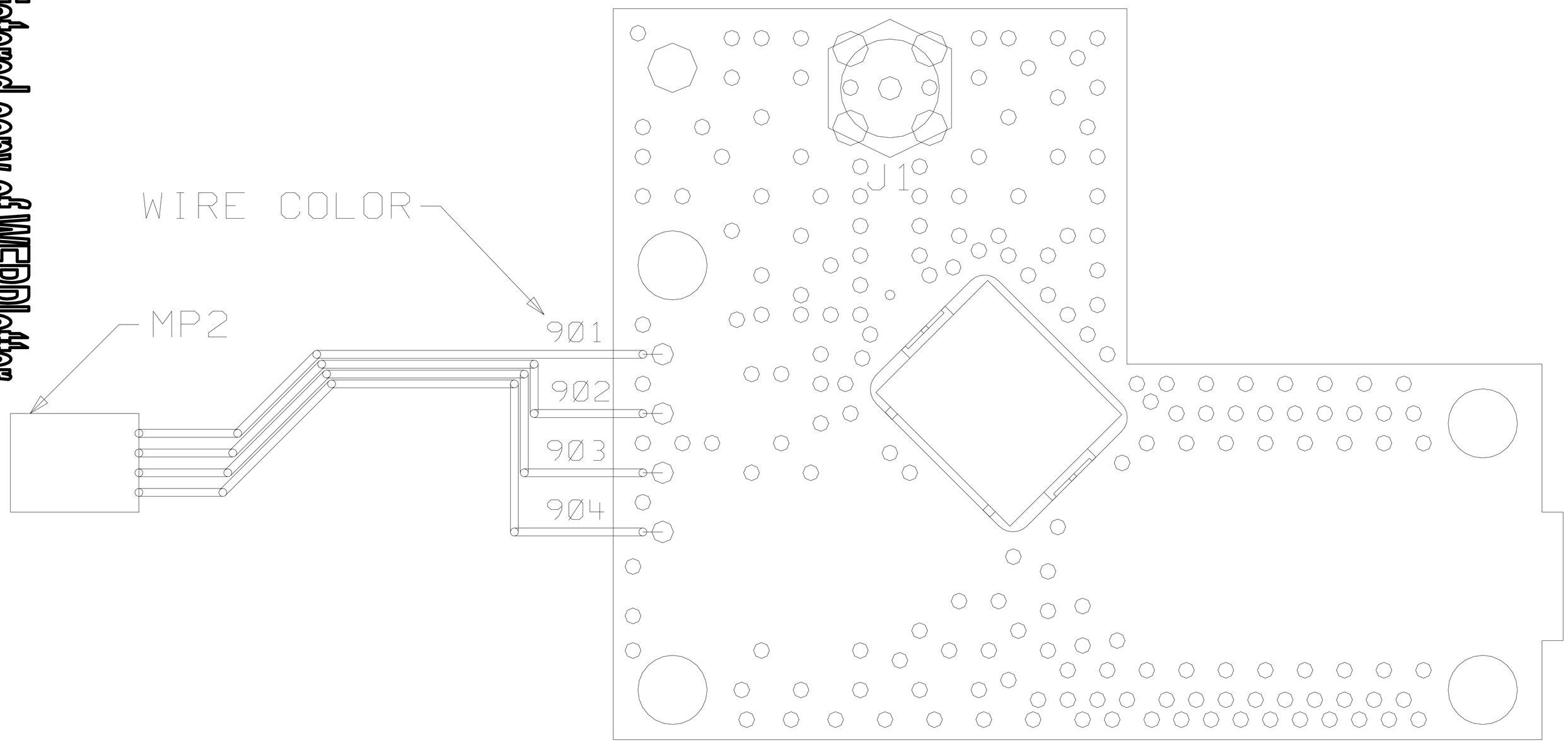

BOTTOM SIDE

AGILENT TECHNOLOGIES
RESTRICTED
THIS DOCUMENT CONTAINS CONFIDENTIAL, PROPRIETARY INFORMATION THAT IS AGILENT TECHNOLOGIES PROPERTY. DO NOT DISCLOSE TO OR DUPLICATE FOR OTHERS EXCEPT AS AUTHORIZED BY AGILENT TECHNOLOGIES.

UNLESS OTHERWISE SPECIFIED, DIMENSIONS ARE IN INCHES.
TOLERANCES: XX.XXX ±.010 XX.XX ±.02
THIRD ANGLE PROJECTION
DO NOT SCALE THIS DRAWING

R ODAY DRAWN BY	1-15-96 DATE
PAT BROWN ENGINEER/CHECKER	1-15-96 DATE
RELEASE TO PROD.	DATE
SUPERSEDES DWG.	

TITLE: ASSEMBLY, PWB TG BABY

FILENAME: a6aea005	Agilent
SCALE: NONE	
SHEET 2 OF 2	PART NUMBER: E4401-60005

C-E4401-60005-2

Printed by unregistered copy of WEBPlotter

CA3844		D-E4401-60095-1
REV.	INFORMATION	APPROVED / DATE
A	AS ISSUED	P. BROWN 10/26/98
B	PER ECO 53-14147 /RS	T. OHLSEN 11-29-99
C	PER ECO 53-13851 /TM	K. SILK 12-06-99

TRACKING GENERATOR (ADR10)

J1-PMH1 PMH1 NC

J1-1	1 ACOM	J1-51	51 ACOM
J1-2	2 ACOM	J1-52	52 10MHZ_REF
J1-3	3 ACOM	J1-53	53 ACOM
J1-4	4 AUD10	J1-54	54 ACOM
J1-5	5 ACOM	J1-55	55 ACOM
J1-6	6 ACOM	J1-56	56 ANA_TST
J1-7	7 ACOM	J1-57	57 ACOM
J1-8	8 CRD_ANLG7	J1-58	58 ACOM
J1-9	9 ACOM	J1-59	59 ACOM
J1-10	10 ACOM	J1-60	60 CRD_ANLG6
J1-11	11 ACOM	J1-61	61 ACOM
J1-12	12 CRD_ANLG5	J1-62	62 ACOM
J1-13	13 ACOM	J1-63	63 ACOM
J1-14	14 ACOM	J1-64	64 CRD_ANLG4
J1-15	15 ACOM	J1-65	65 ACOM
J1-16	16 CRD_ANLG3	J1-66	66 ACOM
J1-17	17 ACOM	J1-67	67 ACOM
J1-18	18 ACOM	J1-68	68 CRD_ANLG2
J1-19	19 ACOM	J1-69	69 ACOM
J1-20	20 CRD_ANLG1	J1-70	70 ACOM
J1-21	21 ACOM	J1-71	71 ACOM
J1-22	22 ACOM	J1-72	72 AUX_VIDEO
J1-23	23 ACOM	J1-73	73 ACOM
J1-24	24 IF_VIDEO	J1-74	74 ACOM
J1-25	25 ACOM	J1-75	75 ACOM
J1-26	26 ACOM	J1-76	76 AC_IF
J1-27	27 ACOM	J1-77	77 ACOM
J1-28	28 GATE_AC	J1-78	78 ACOM
J1-29	29 ACOM	J1-79	79 ACOM
J1-30	30 AC_TRIG	J1-80	80 HSWP_CNTRL
J1-31	31 ACOM	J1-81	81 HSWP_AC
J1-32	32 ABC_SYNC	J1-82	82 LAC_SRQ
J1-33	33 ACOM	J1-83	83 HPUP_SYNC
J1-34	34 HPUP_AC	J1-84	84 MISO
J1-35	35 AC_ID0	J1-85	85 LCNTRL
J1-36	36 AC_ID1	J1-86	86 MOSI
J1-37	37 AC_ID2	J1-87	87 LDATA
J1-38	38 AC_ID3	J1-88	88 SCK
J1-39	39 AC_ID4	J1-89	89 LADDR
J1-40	40 ACOM	J1-90	90 ACOM
J1-41	41 N15	J1-91	91 N15
J1-42	42 NS	J1-92	92 NS
J1-43	43 PS	J1-93	93 PS
J1-44	44 PS	J1-94	94 PS
J1-45	45 P15	J1-95	95 P15
J1-46	46 P15	J1-96	96 P15
J1-47	47 P28	J1-97	97 P28
J1-48	48	J1-98	98
J1-49	49 ACOM	J1-99	99 ACOM
J1-50	50 PSD	J1-100	100 DCOM
			PSD

J1-PMH2 PMH2 NC

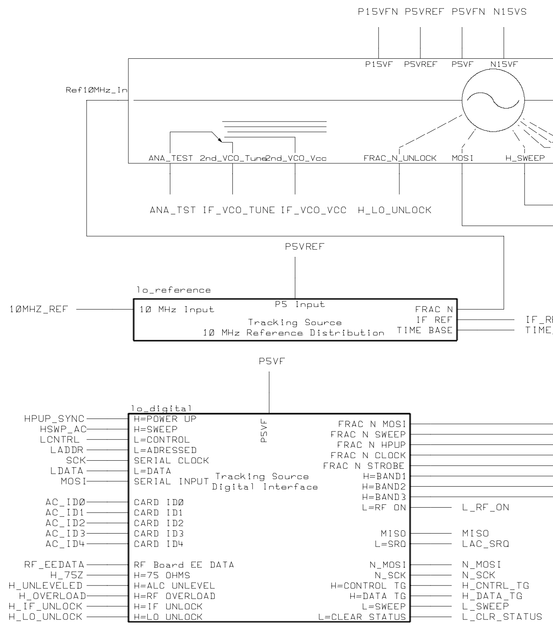

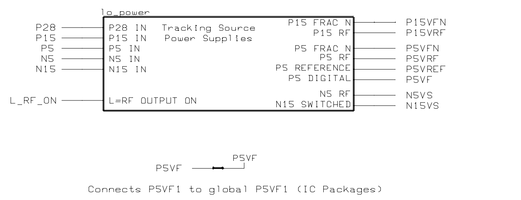

Measurement Conditions
Frequency: 50 MHz CW
Amplitude: -10 dBm
Output Atten: 0dB
Modulation: Off
Room Temp ~25 Deg C

Test Points
TP xxx*xxx
TNxxx

Reference Designators
A: None
CR: None
DS: None
FL: None
J: J1-J4, J6-J7
L: None
Q: None
R: R41-R43
U: None

AGILENT TECHNOLOGIES
RESTRICTED
THIS DOCUMENT CONTAINS CONFIDENTIAL, PROPRIETARY INFORMATION THAT IS AGILENT TECHNOLOGIES PROPERTY. DO NOT DISCLOSE TO OR DUPLICATE FOR OTHERS EXCEPT AS AUTHORIZED BY AGILENT TECHNOLOGIES.

12/8/1999 15:12:04 LAST CHECKED	10/26/98 DATE
PAT BROWN ENGINEER	SHEET Ø OF Ø
PAT BROWN DRAWN BY	SIZE D
BA3844 ASSY. REV	A3844 BRD. REV

SCHEMATIC, PWA
TRACKING GENERATOR
LO CONTROL BOARD ASSY
INTERCONNECT DIAGRAM

TITLE: $HP_E4401/20095/A3844_1/LO_TOP sheet1
PATHNAME

Agilent

E4401-60095
PART NUMBER

PAGE 1 OF 7

D-E4401-60095-1
DWG. NO.

Printed by unregistered copy of WEBPlotter

POWER SUPPLY

REVISIONS
SEE PAGE 1 FOR REVISION HISTORY

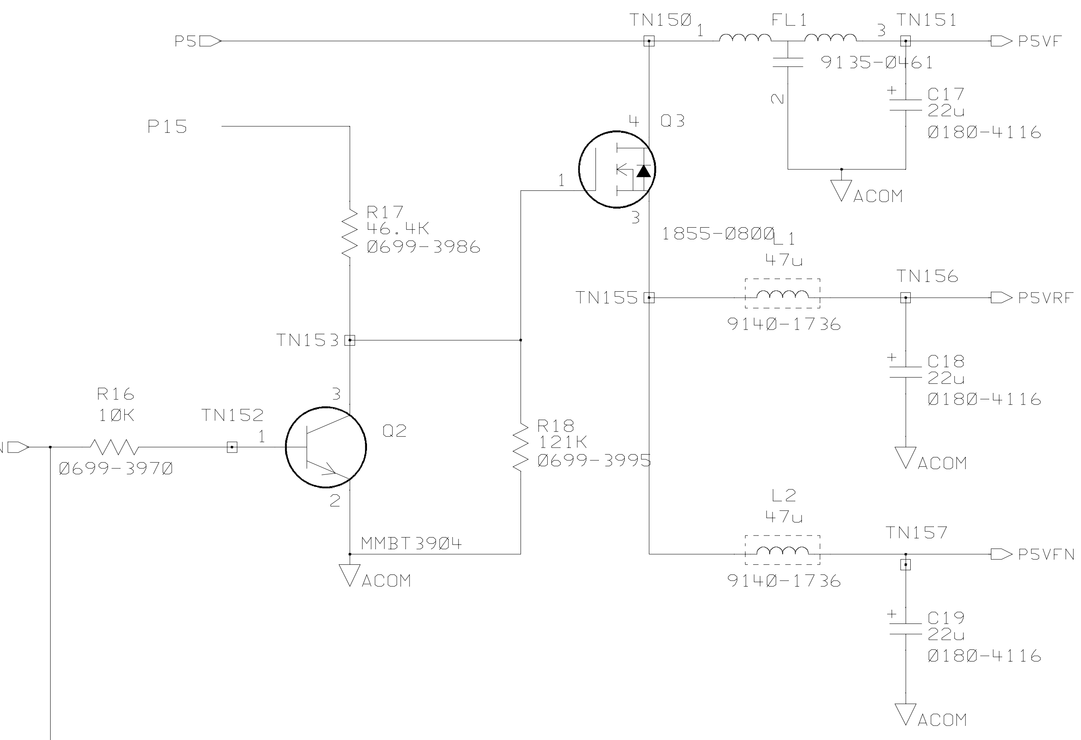

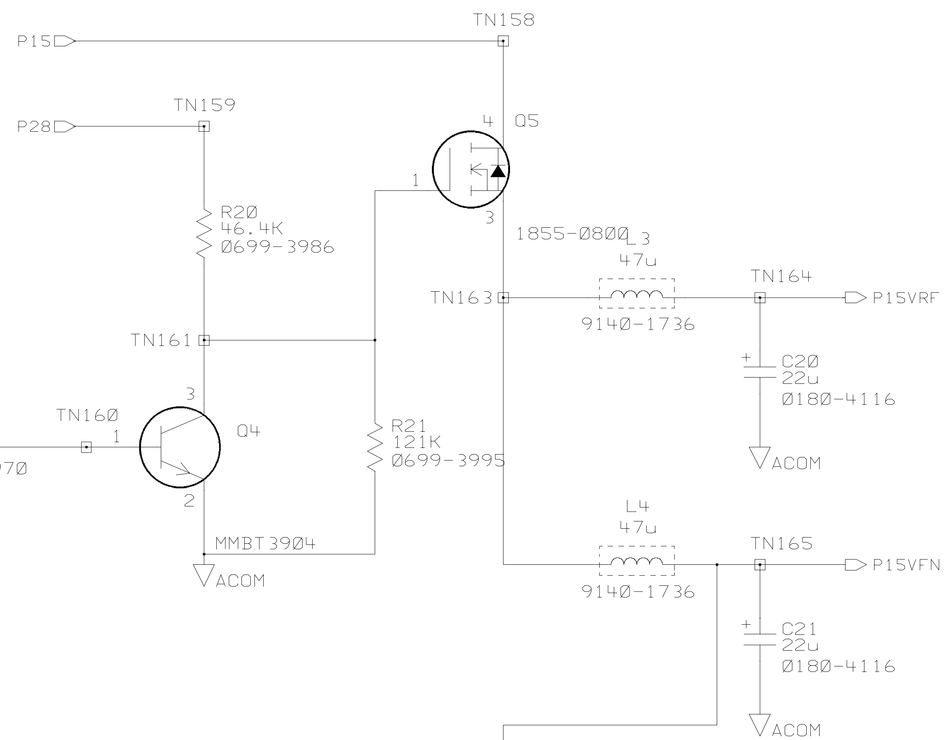

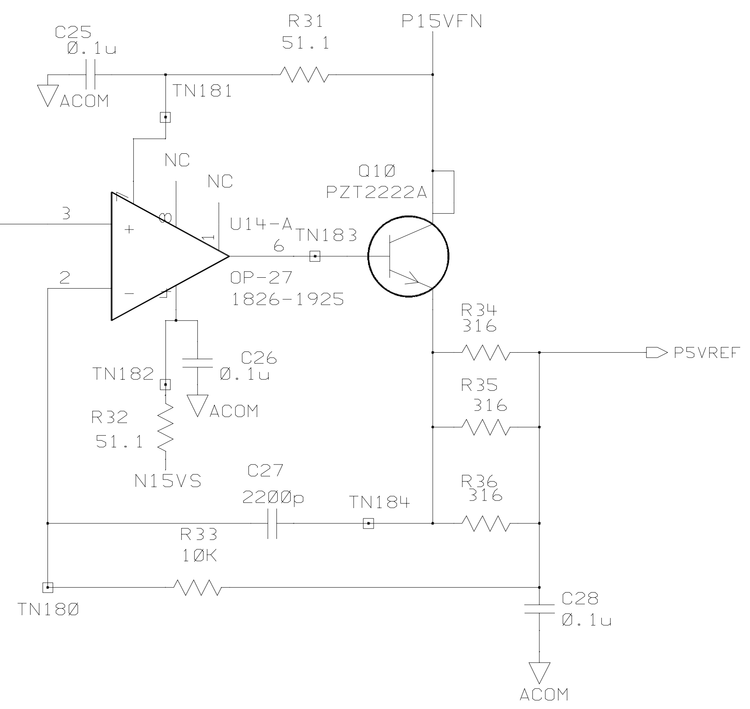

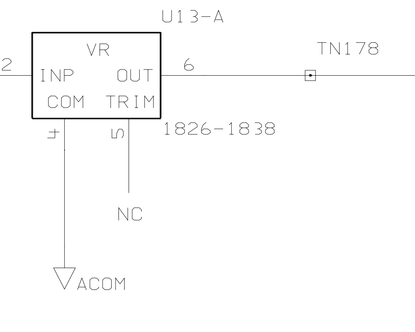

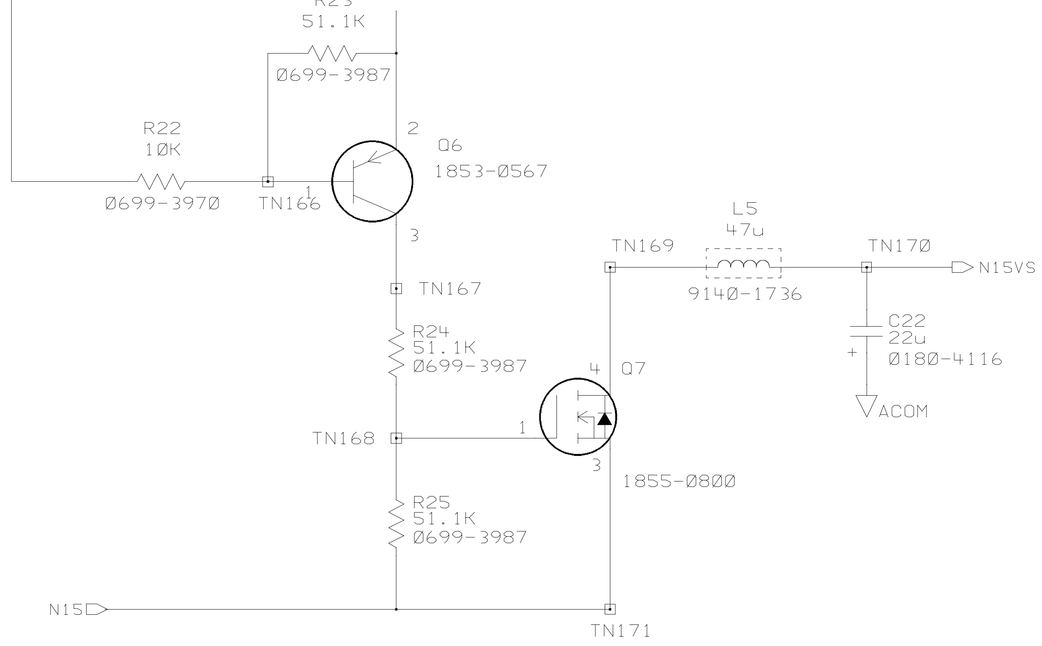

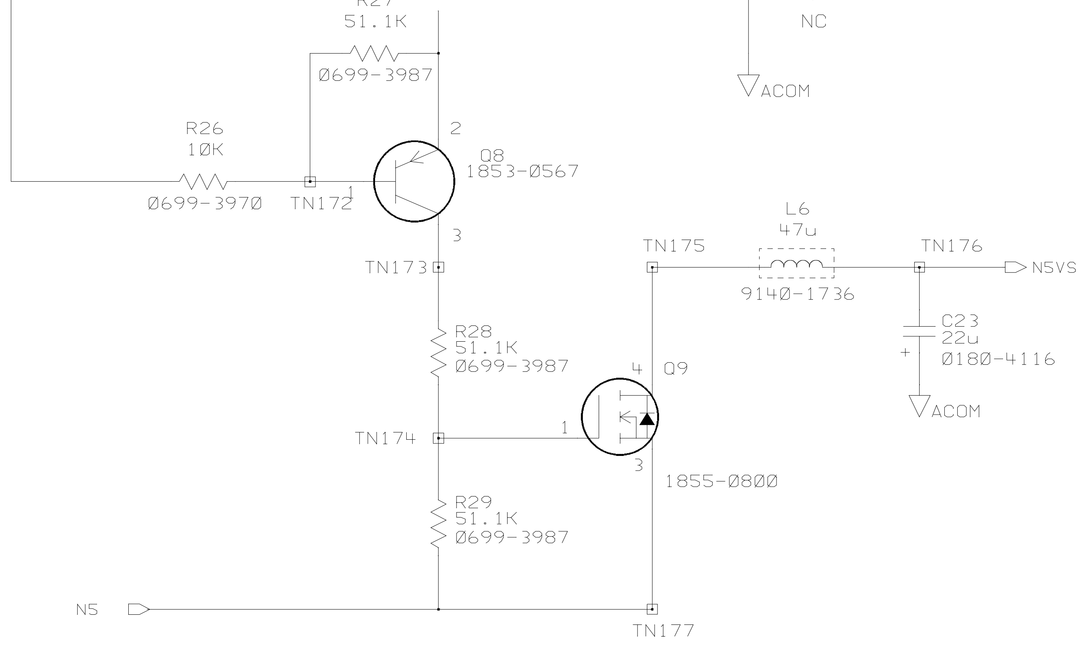

Measurement Conditions
Frequency: 50 MHz CW
Amplitude: -10 dBm
Output Atten: 0dB
Modulation: Off
Room Temp ~25 Deg C

Test Points
TP xxx-xxx
TN150-TN186

Reference Designators:
C17-C28
CR: None
DS: None
FL1
J: None
L1-L6
Q2-Q10
R16-R36
U13-U14

AGILENT TECHNOLOGIES
RESTRICTED
THIS DOCUMENT CONTAINS CONFIDENTIAL, PROPRIETARY INFORMATION THAT IS AGILENT TECHNOLOGIES PROPERTY. DO NOT DISCLOSE TO OR DUPLICATE FOR OTHERS EXCEPT AS AUTHORIZED BY AGILENT TECHNOLOGIES.

12/8/1999 15:19:09 LAST CHECKED	10/26/98 DATE	SCHEMATIC, PWA TRACKING GENERATOR LO CONTROL BOARD POWER DISTRIBUTION	Agilent
PAT BROWN ENGINEER	SHEET 0 OF 0	TITLE	
PAT BROWN DRAWN BY	SIZE B	\SHP_E4401/20095/A3844_1/lo_power sheet1 PATHNAME	E4401-60095 PART NUMBER
	CA3844 ASSY. REV	A3844 BRD. REV	PAGE 7 OF 7
			B-E4401-60095-1 DWG. NO.

Printed by unregistered copy of WEBPlotter

REVISIONS
SEE PAGE 1 FOR REVISION HISTORY

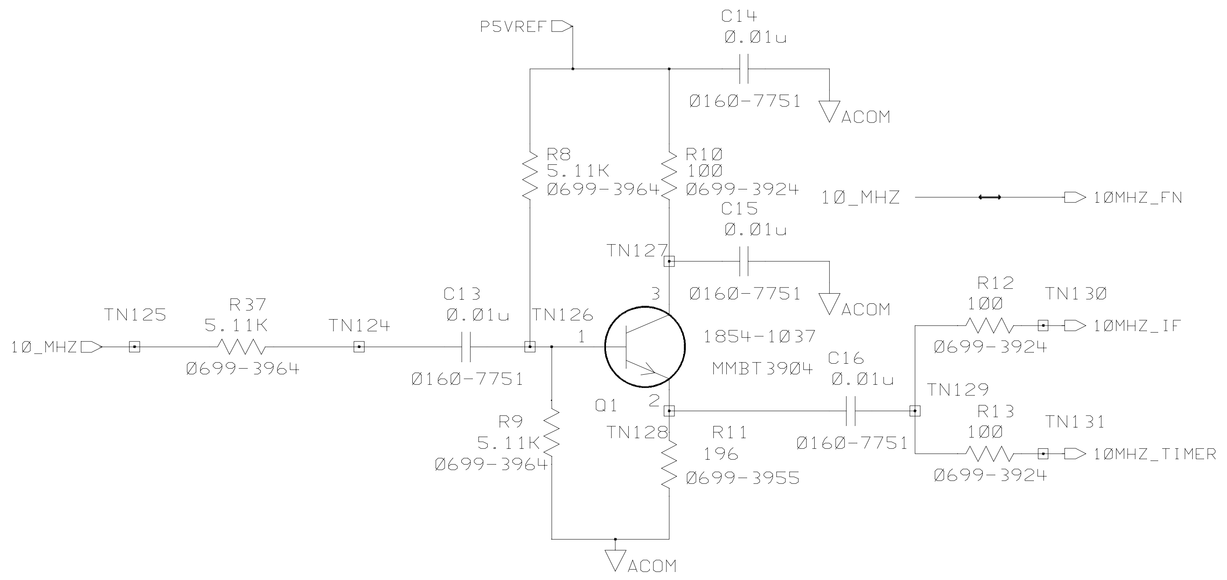

Measurement Conditions
Frequency: 5Ø MHz CW
Amplitude: -1Ø dBm
Output Atten: ØdB
Modulation: Off
Room Temp ~25 Deg C

Test Points
TP xxx-xxx
TN: TN124-TN131

Reference Designators:
C13-C16
CR: None
DS: None
FL: None
J: None
L: None
Q1
R8-R13,R37
U: None

AGILENT TECHNOLOGIES
RESTRICTED
THIS DOCUMENT CONTAINS CONFIDENTIAL, PROPRIETARY INFORMATION THAT IS AGILENT TECHNOLOGIES PROPERTY. DO NOT DISCLOSE TO OR DUPLICATE FOR OTHERS EXCEPT AS AUTHORIZED BY AGILENT TECHNOLOGIES.

12/8/1999 15:15:12 LAST CHECKED	1Ø/26/98 DATE	SCHEMATIC, PWA TRACKING GENERATOR LO CONTROL BOARD REFERENCE DISTRIBUTION TITLE	Agilent
PAT BROWN ENGINEER	SHEET Ø OF Ø		
PAT BROWN DRAWN BY	SIZE B	$HP_E44Ø1/2ØØ95/A3844_1/lo_reference sheet1 PATHNAME	E44Ø1-6ØØ95 PART NUMBER
	CA3844 ASSY. REV	A3844 BRD. REV	5 7 PAGE OF	B-E44Ø1-6ØØ95-1 DWG. NO.

Printed by unregistered copy of WEP Protel

FRACTIONAL N FIRST LO SYNTHESIZER

REVISIONS
SEE PAGE 1 FOR REVISION HISTORY

A REFERENCE DIVIDER

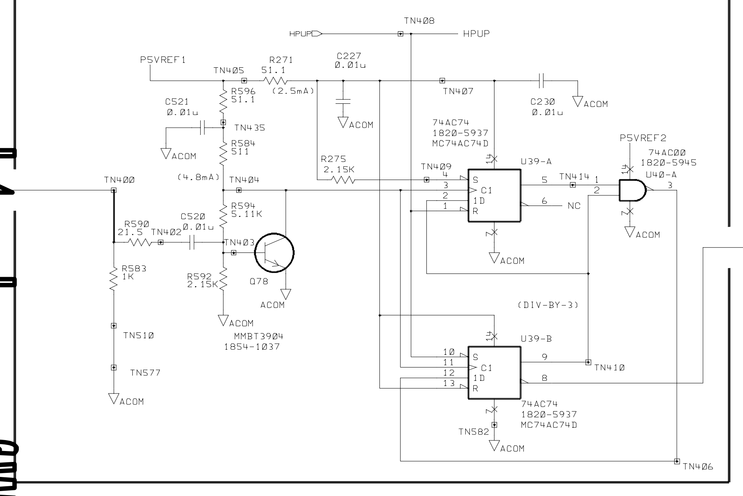

B PHASE/FREQUENCY DETECTOR

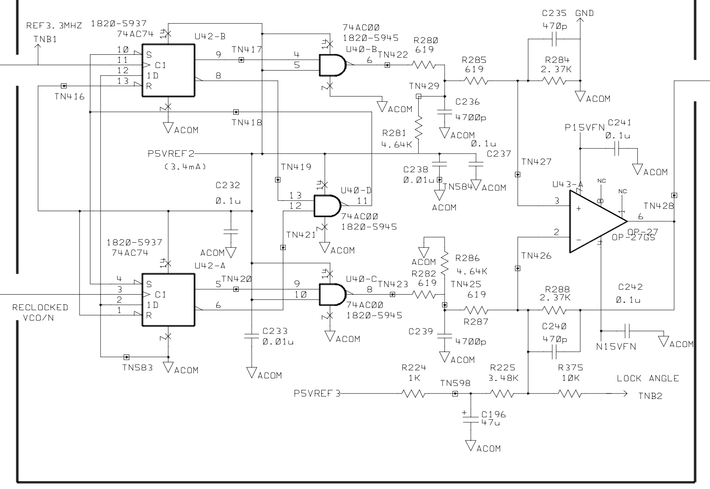

C LOOP GAIN CONTROL

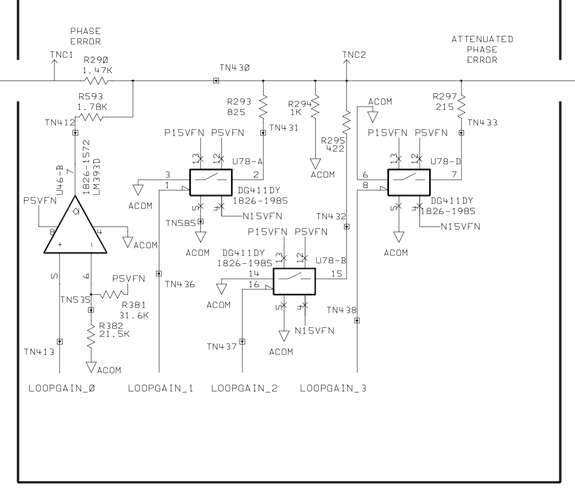

D LOOP INTEGRATOR

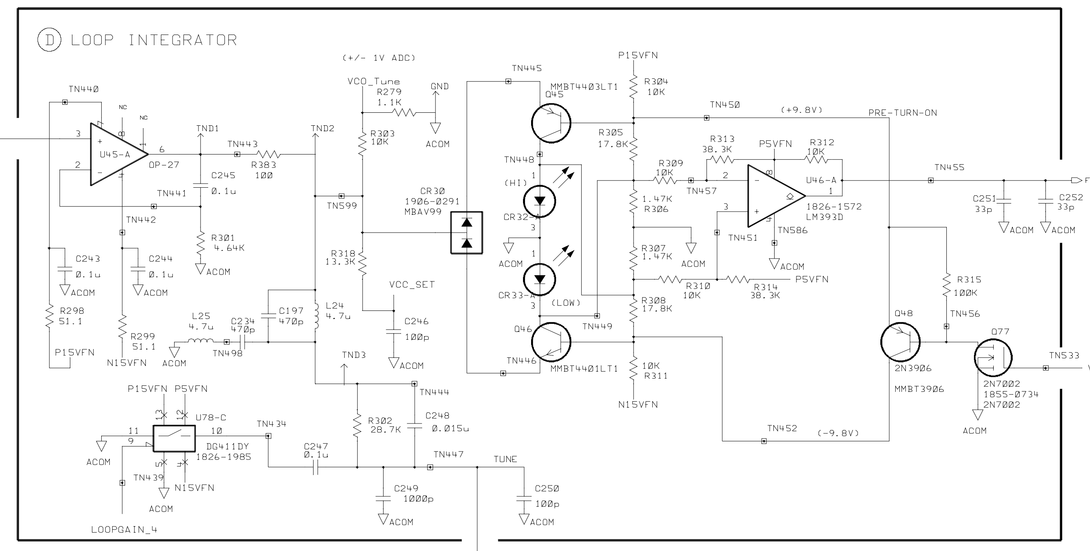

E 800 TO 1310 MHz VOLTAGE-CONTROLLED OSCILLATOR

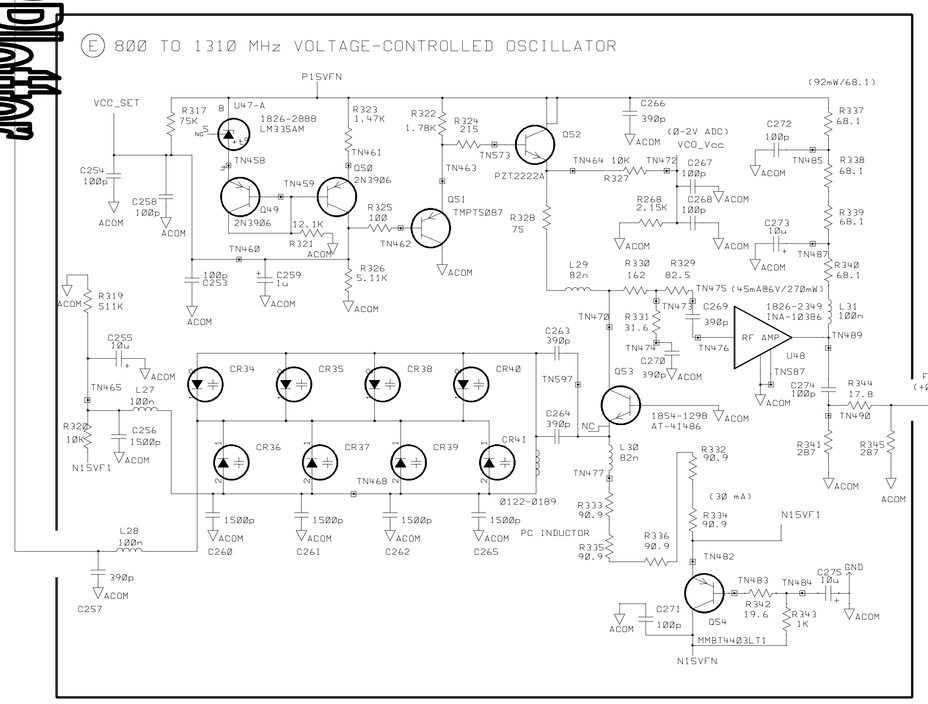

F BUFFER AMPLIFIERS

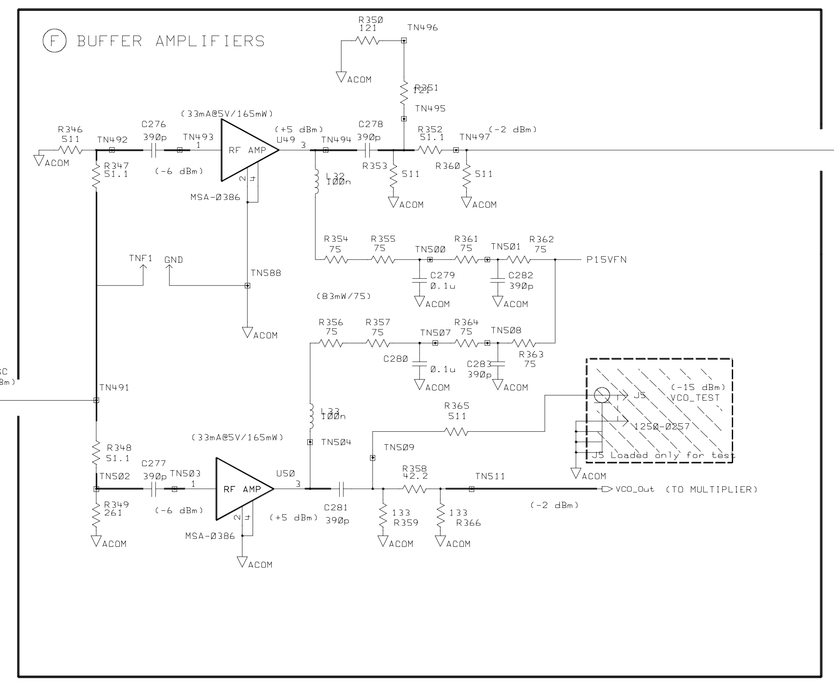

I PRESCALER

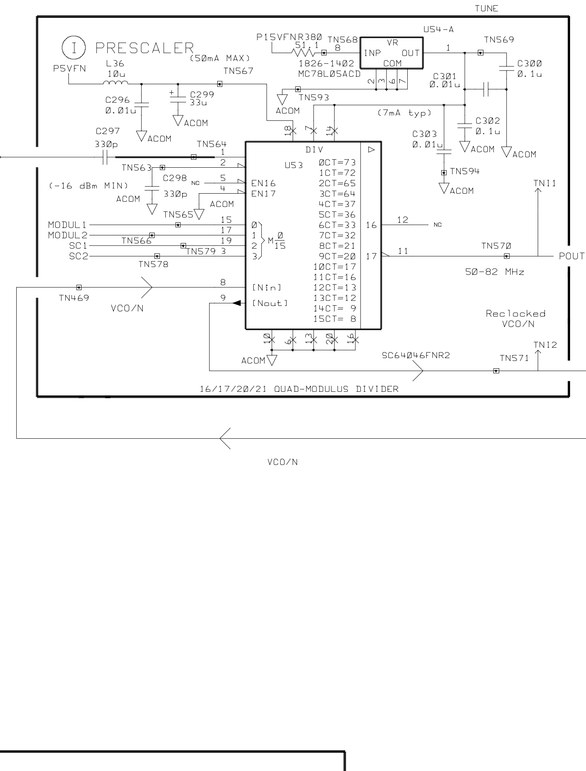

J FRACTIONAL DIVIDER

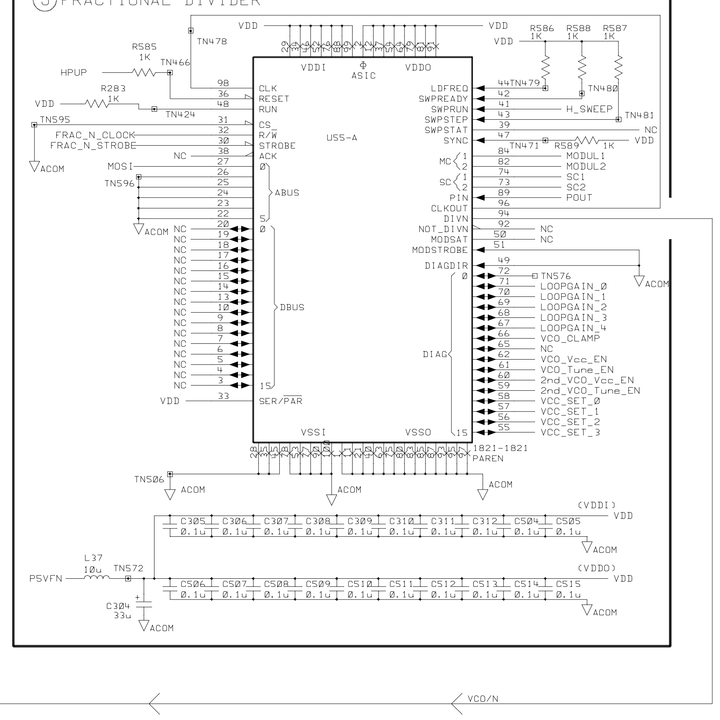

K POWER SUPPLIES

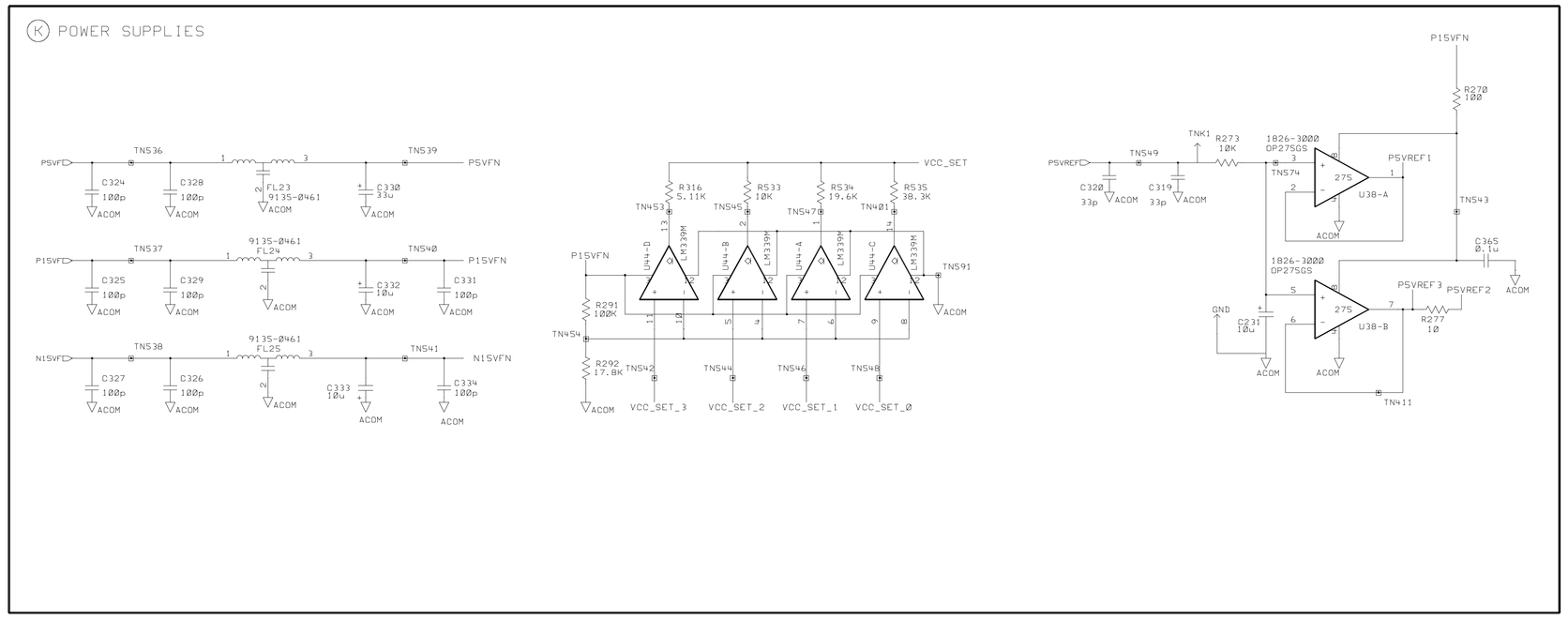

L TEST MUX

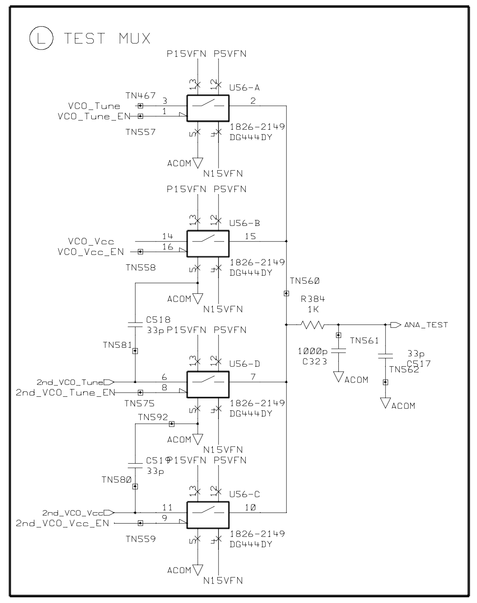

H FRAC_N INTERFACE

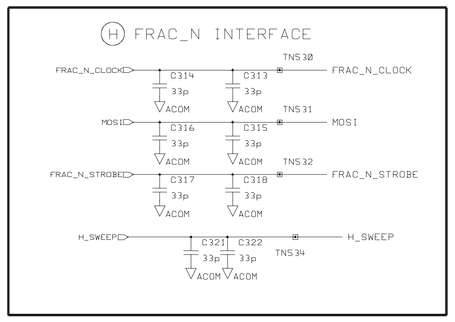

Measurement Conditions
Frequency: 50 MHz CW
Amplitude: +12 dBm
Output Atten: 2dB
Modulation: Off
Room Temp: 25 Deg C

Test Points
TP1 - TN12
TN900-TN999

T# = TEST PAD WITH PM080056 VIA
G# = GND PADS WITH PM080056 VIA
tn# = 3070 TEST PAD WITH BOTTOM LABEL
TN# = 3070 TEST PAD WITH TOP & BOTTOM LABELS

AGILENT TECHNOLOGIES RESTRICTED
THIS DOCUMENT CONTAINS CONFIDENTIAL, PROPRIETARY INFORMATION THAT IS AGILENT TECHNOLOGIES PROPERTY. DO NOT DISCLOSE TO OR DUPLICATE FOR OTHERS EXCEPT AS AUTHORIZED BY AGILENT TECHNOLOGIES.

12/8/1999 15:13:13 LAST CHECKED	10/26/98 DATE	SCHEMATIC, PWA TRACKING GENERATOR LO CONTROL BOARD FIRST LO SYNTHESIZER	Agilent
PAT BROWN ENGINEER	SHEET Ø OF Ø		
PAT BROWN DRAWN BY	SIZE D	TITLE SHP_E4401/20095/A3844_1/lo_paren sheet1 PATHNAME	E4401-60095 PART NUMBER
CA3844 ASSY REV	A3844 BRD REV	PAGE 2 OF 7	D-E4401-60095-1 DWG. NO.

Printed by unregistered Copy of MEEPlotter
Plotted with MEEPlotter

REVISIONS
SEE PAGE 1 FOR REVISION HISTORY

A) SOURCE ADDRESS AND CONTROL

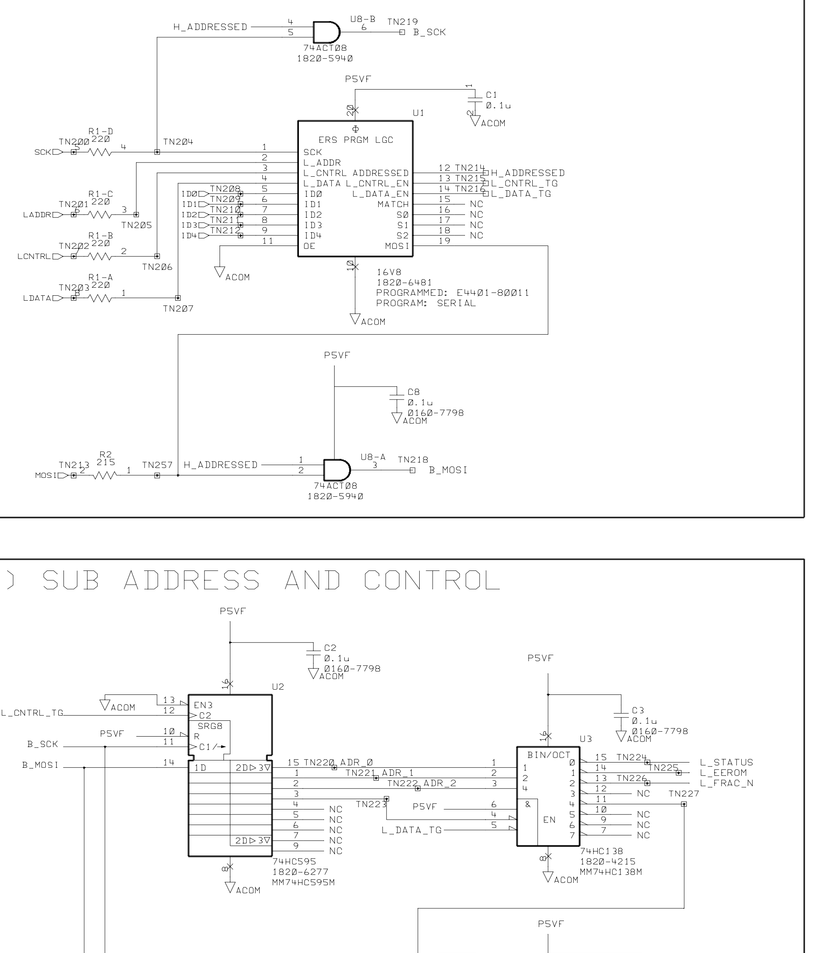

B) SUB ADDRESS AND CONTROL

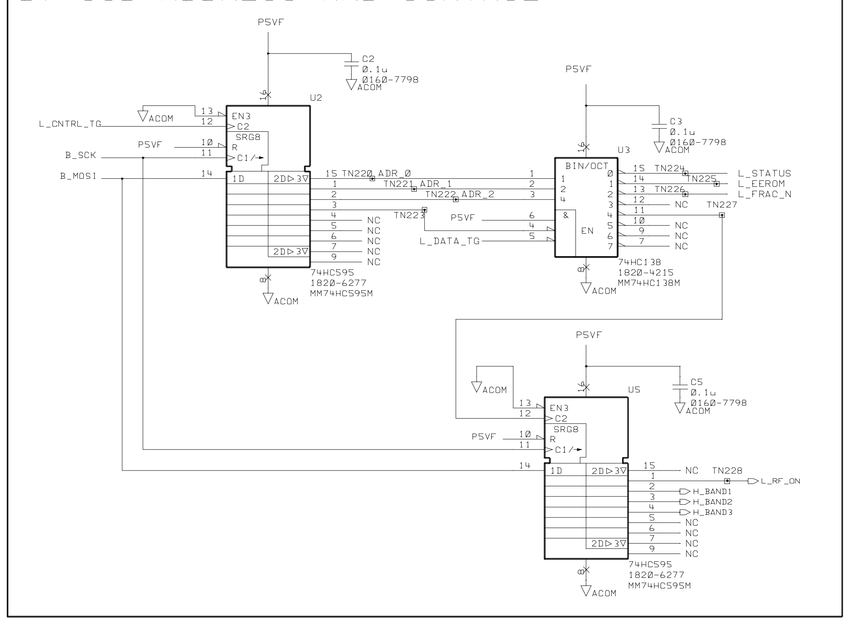

C) SOURCE STATUS

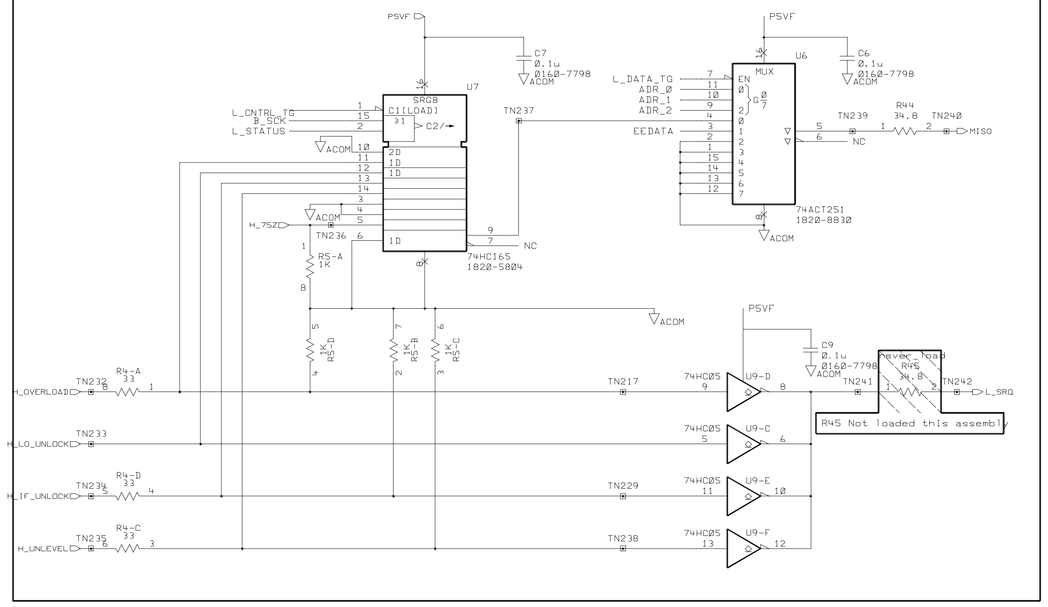

D) RF BOARD INTERFACE

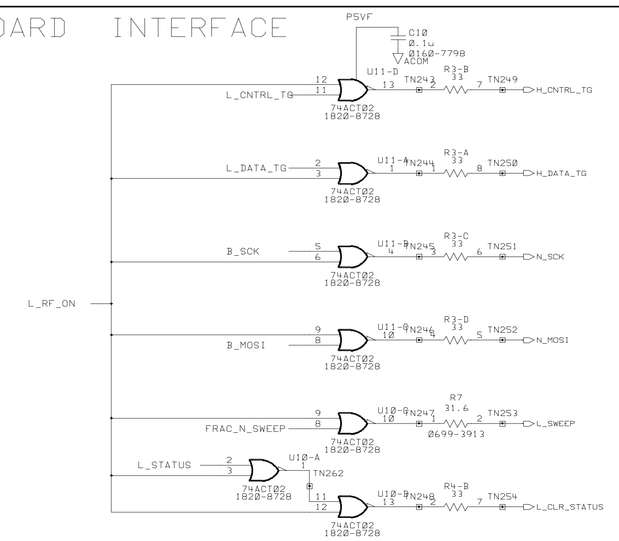

E) FRAC N INTERFACE

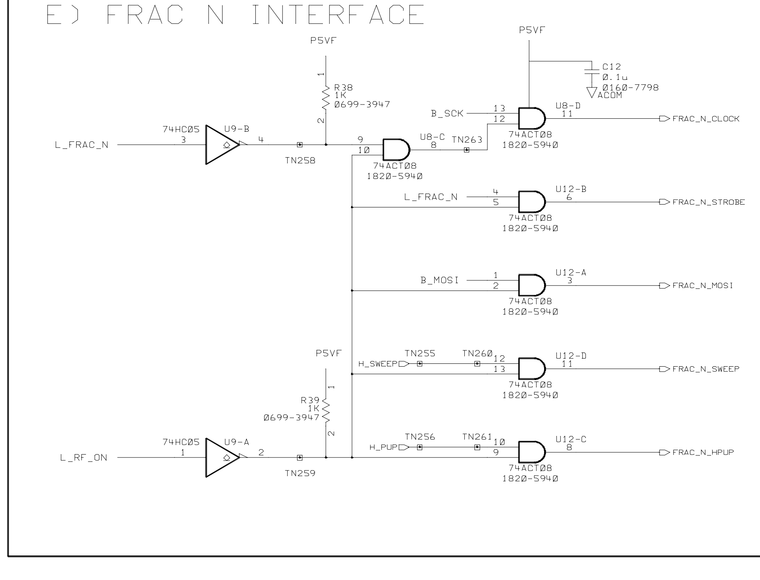

F) CAL ROM

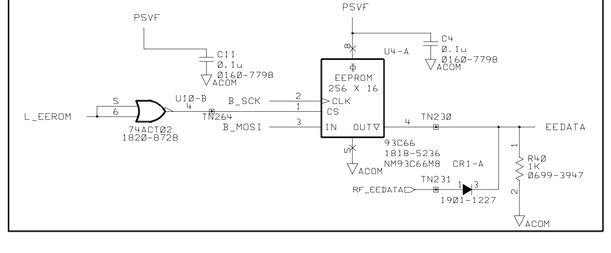

Measurement Conditions
Frequency: 50 MHz CW
Amplitude: -10 dBm
Output Atten: 0dB
Modulation: Off
Room Temp ~25 Deg C

Test Points
TP xxx-xxx
TNxxx

Reference Designators
C: C1-12
CR1
DS: None
FL: None
J: None
L: None
Q: None
R1-5,R7,R38-40,R44,R46
U: U1-12

AGILENT TECHNOLOGIES
RESTRICTED
THIS DOCUMENT CONTAINS CONFIDENTIAL, PROPRIETARY INFORMATION THAT IS AGILENT TECHNOLOGIES PROPERTY. DO NOT DISCLOSE TO OR DUPLICATE FOR OTHERS EXCEPT AS AUTHORIZED BY AGILENT TECHNOLOGIES.

12/8/1999 15:15:52 LAST CHECKED	10/26/98 DATE	SCHEMATIC, PWA TRACKING GENERATOR LO CONTROL BOARD DIGITAL INTERFACE	Agilent
PAT BROWN ENGINEER	SHEET 8 OF 8	TITLE	E4401-60095 PART NUMBER
PAT BROWN DRAWN BY	SIZE D	PATHNAME 84P_E4401/20095/A3844_1/lo_digital sheet1	
CA3844 ASSY. REV	A3844 BRD. REV	PAGE 6 OF 7	D-E4401-60095-1 DWG. NO.

Printed by unregistered copy of WEBPlotter
Printed by unregistered copy of WEBPlotter

REVISIONS
SEE PAGE 1 FOR REVISION HISTORY

Measurement Conditions
Frequency: 50 MHz CW
Amplitude: -10 dBm
Output Atten: 0dB
Modulation: Off
Room Temp ~25 Deg C

Test Points
TP xxx-xxx
TN143

Reference Designators:
C29
CR: None
DS: None
FL: None
J: None
L: None
Q: None
R: R14-R15
U: None

AGILENT TECHNOLOGIES
RESTRICTED
THIS DOCUMENT CONTAINS CONFIDENTIAL, PROPRIETARY INFORMATION THAT IS AGILENT TECHNOLOGIES PROPERTY. DO NOT DISCLOSE TO OR DUPLICATE FOR OTHERS EXCEPT AS AUTHORIZED BY AGILENT TECHNOLOGIES.

12/8/1999 15:14:40 LAST CHECKED	10/26/98 DATE	SCHEMATIC, PWA TRACKING GENERATOR LO CONTROL BOARD FIRST LO COUPLER TITLE	Agilent
PAT BROWN ENGINEER	SHEET Ø OF Ø		
PAT BROWN DRAWN BY	SIZE B	$HP_E4401/20095/A3844_1/lo_coup sheet1 PATHNAME	E4401-60095 PART NUMBER
	CA3844 ASSY. REV	A3844 BRD. REV	4 OF 7 PAGE
			B-E4401-60095-1 DWG. NO.

Printed by unregistered copy of WEBPlot4

REVISIONS
SEE PAGE 1 FOR REVISION HISTORY

⓪ FIRST LO MULTIPLIER

TN1-106 used

(2.4GHZ NOTCH)

1.0mA; 3.4mA

(2345-2883MHz)

(4.5mA@5V)

(MGA-87563)

(2730-3390MHz)

(3210-3990MHz)

(3 dB PAD)

(2 dB PAD)

+3 dBm +/- 4 dB

Measurement Conditions
Frequency: 50 MHz CW
Amplitude: -10 dBm
Output Atten: 0dB
Modulation: Off
Room Temp ~25 Deg C

Test Points
TP xxx-xxx
TN: TN1-TN106

AGILENT TECHNOLOGIES
RESTRICTED
THIS DOCUMENT CONTAINS CONFIDENTIAL, PROPRIETARY INFORMATION THAT IS AGILENT TECHNOLOGIES PROPERTY. DO NOT DISCLOSE TO OR DUPLICATE FOR OTHERS EXCEPT AS AUTHORIZED BY AGILENT TECHNOLOGIES.

12/8/1999 15:13:58 LAST CHECKED	10/26/98 DATE	SCHEMATIC, PWA TRACKING GENERATOR LO CONTROL BOARD FIRST LO MULTIPLIER	Agilent
PAT BROWN ENGINEER	SHEET Ø OF Ø		
PAT BROWN DRAWN BY	SIZE D	$HP_C4401/2/2095/A3844_1/lo_tripler sheet1 PATHNAME	E4401-60095 PART NUMBER
CA3844 ASSY. REV	A3844 BRD. REV	3 OF 7 PAGE	D-E4401-60095-1 DWG. NO.

Printed by unregistered copy of WEBPlotter

5300 D-E4401-63095-2

SYM	REVISIONS	APPROVED	DATE
	SEE SHEET 1		

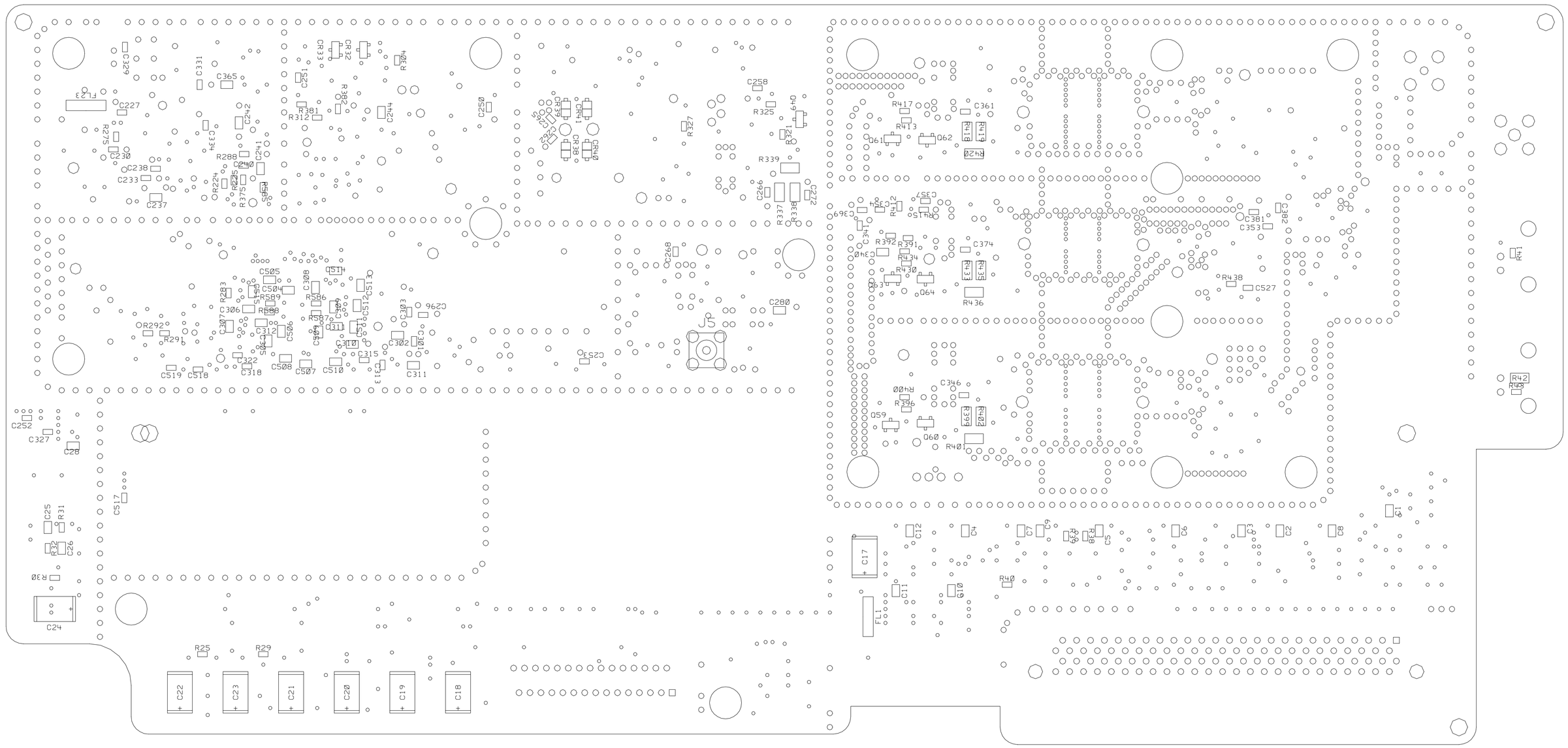

BOTTOM SIDE

AGILENT TECHNOLOGIES
RESTRICTED
THIS DOCUMENT CONTAINS CONFIDENTIAL, PROPRIETARY INFORMATION THAT IS AGILENT TECHNOLOGIES PROPERTY. DO NOT DISCLOSE TO OR DUPLICATE FOR OTHERS EXCEPT AS AUTHORIZED BY AGILENT TECHNOLOGIES.

UNLESS OTHERWISE SPECIFIED, DIMENSIONS ARE IN INCHES.
TOLERANCES: XX.XXX ±.010 XX.XX ±.02
THIRD ANGLE PROJECTION
DO NOT SCALE THIS DRAWING

R ODAY DRAWN BY	7-10-98 DATE
Brown ENGINEER/CHECKER	7-10-98 DATE
RELEASE TO PROD.	DATE
SUPERSEDES DWG.	

ASSEMBLY, PWB
SOURCE LOL
TRACKING GEN
CONTROL
TITLE

a6aea095 FILENAME	Agilent
SCALE NONE	
SHEET 2 OF 2	E4401-63095 PART NUMBER
D-E4401-63095-2	

Printed by unregistered copy of WEBPCB#1 - printed.pcb

5300 D-E4401-20095-1

SYM	REVISIONS	APPROVED	DATE
A	AS ISSUED /RO	P BROWN	10-27-98

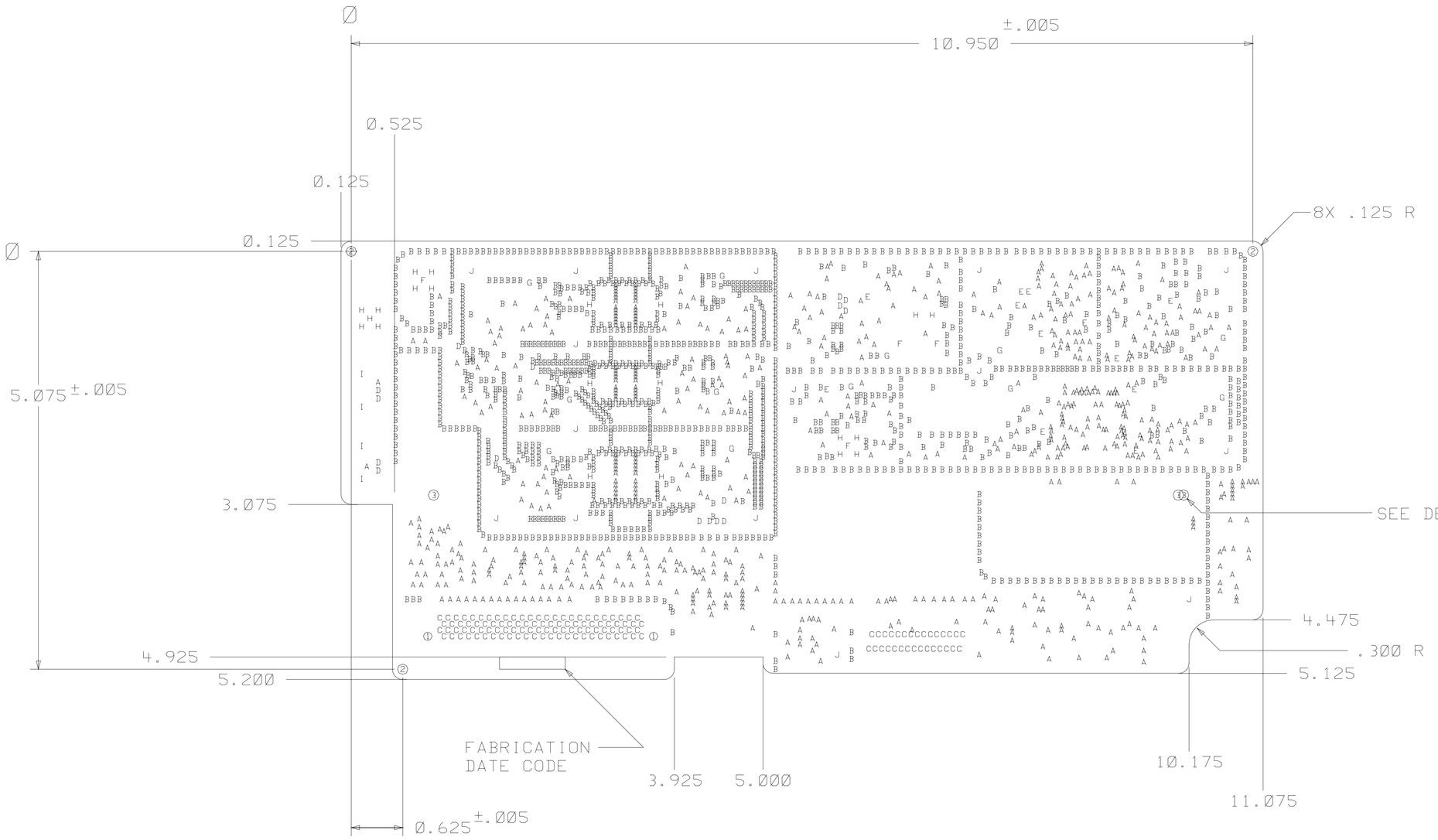

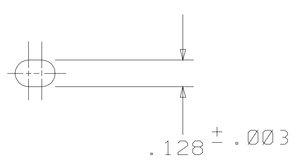

DETAIL A

PECK DRILLED SLOT

UNPLATED

FABRICATION INFORMATION (GENERAL): UNLESS OTHERWISE SPECIFIED

1 REFER TO HP DWG A-5951-1596-1 (400.410) FOR THE FOLLOWING: ☒ PC5
- 1.1 DESIGN CLASS: ☐ PC15 ☐ PC12 ☐ PC8 ☐ PC6 ☐ PC10
- 1.2 MATL. CONSTRUCTION DETAIL B ☐ FR4 ☐ DUROID ☐ TEFLON
  SPECIAL REQUIREMENT: OUTER CLAD WT. Ø.5OZ INNER CLAD WT. 1.0OZ
- 1.3 PLATING TYPE 19

2 INSPECT TO HP DWG A-5951-1581-1 (400.430) P.C. ACCEPTABILITY

3 SOLDERMASK: SPECIAL REQUIREMENT _____
NO. OF MASK 2 ☒ COMPONENT SIDE ☒ SOLDER SIDE

4 GRAPHICS: WHITE ☒ COLOR ☐ _____
NO. OF MASK 2 ☒ COMPONENT SIDE ☒ SOLDER SIDE

5 BARE BOARD ELECTRICAL TEST: ☒ YES ☐ NO
☐ UNIVERSAL GRID (.100) ☒ DEDICATED FIXTURE

FABRICATION - HOLE REQUIREMENTS

[6] FINISHED HOLE PLATING CODE : P - PLATED , U - UNPLATED

DRILL BOARD USING DATA ON NC DRILL TAPE DATED 10-27-98 , SUPPLIED BY DIVISION WITH ENGINEERING RESPONSIBILITY

SYM	FINISHED HOLE SIZE	FINISHED HOLE TOL.±	PLATING [6]	QTY	SYM	FINISHED HOLE SIZE	FINISHED HOLE TOL.±	PLATING [6]	QTY
A	Ø.012	Ø.003	P	685	I	Ø.Ø8Ø	Ø.Ø03	P	4
B	Ø.Ø19	Ø.Ø03	P	1394	J	Ø.146	Ø.Ø03	P	15
C	Ø.Ø31	Ø.Ø03	P	13Ø	1	Ø.1Ø4	Ø.ØØ1	U	2
D	Ø.Ø37	Ø.Ø03	P	16	2	Ø.125	Ø.ØØ1	U	3
E	Ø.Ø4Ø	Ø.Ø03	P	12	3	Ø.128	Ø.ØØ1	U	3
F	Ø.Ø46	Ø.Ø03	P	4					
G	Ø.Ø56	Ø.Ø03	P	12					
H	Ø.Ø64	Ø.Ø03	P	21					

FABRICATION - BLANK REQUIREMENTS: UNLESS OTHERWISE SPECIFIED

7 .Ø47 MAXIMUM RADIUS PERMISSIBLE ON INSIDE AND OUTSIDE CORNERS

8 ALL ROUTED HOLES AND SLOTS ARE UNPLATED

9 DESIGN TECHNOLOGY SMT2

10 FILM DATECODE A3844

11 THERE IS ONE FINEPITCH PART ON SIDE A (U55).

12 BREAKOUT/TRACE WIDTH REDUCTION: WHEN REQUIRED TO MEET HP OR SUPPLIER SPECIFICATIONS. COPPER MAY BE ADDED TO PAD. THE ADDED COPPER SHALL EXTEND NO MORE THAN Ø.ØØ5 INCHES BEYOND THE CURRENT PAD EDGE. FOLLOW MODIFICATION. A DRC SHALL BE RUN AND ANY VIOLATIONS DISCUSSED WITH THE RESPONSIBLE DESIGN ENITY.

13 ADD DIELECTRIC TEST COUPON TO PANEL. PANEL MUST BE TESTED AND FALL WITHIN SPECIFICED PARAMETERS. (4-4.2)

RF/MICROWAVE PCB CONSTRUCTION

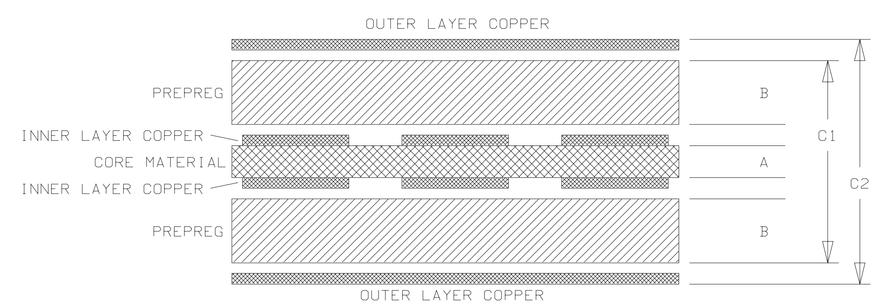

FINISHED PCB TOLERANCES

LAYER	DRAWING DESIGNATION	CONSTRUCTION	DIMENSION AND TOLERANCE
CORE	A	2 LAYERS OF 7628 GLASS	.014 +/-.0014
PREPREG	B	3 LAYERS OF 7628 GLASS	.021 +/-.002
INNER LAYER COPPER		1 OZ. FOIL	.00135 +/-.00015
OUTER LAYER COPPER		1/2 OZ. COPPER PLATED UP	.0025 +/-.0008
BOARD THICKNESS W/O OUTER COPPER	C1		.0587 +/-.0064
BOARD THICKNESS COPPER TO COPPER	C2		.0637 +/-.008
INNER LAYER COPPER LINE WIDTH			+/-.001
OUTER LAYER COPPER LINE WIDTH			+/-.0015

DETAIL B

MATERIAL HT2

HP PROPRIETARY
THIS DOCUMENT CONTAINS CONFIDENTIAL, PROPRIETARY INFORMATION THAT IS HEWLETT-PACKARD (HP) PROPERTY. DO NOT DISCLOSE TO OR DUPLICATE FOR OTHERS EXCEPT AS AUTHORIZED BY HP.

UNLESS OTHERWISE SPECIFIED, DIMENSIONS ARE IN INCHES.
TOLERANCES: XX.XXX ±.010 XX.XX ±.02
THIRD ANGLE PROJECTION
DO NOT SCALE THIS DRAWING

R ODAY	DRAWN BY	7-10-98 DATE
Brown	ENGINEER/CHECKER	7-10-98 DATE
	RELEASE TO PROD.	DATE
	SUPERSEDES DWG.	

DRILL/BLANK, PWB

TRACKING GEN CONTROL

TITLE

flaea095 FILENAME

NONE SCALE

SHEET 1 OF 1

HEWLETT PACKARD

E4401-20095 PART NUMBER

D-E4401-20095-1

Printed by unregistered copy of WEBPlotter

5300 D-E4401-63095-2

SYM	REVISIONS	APPROVED	DATE
D			

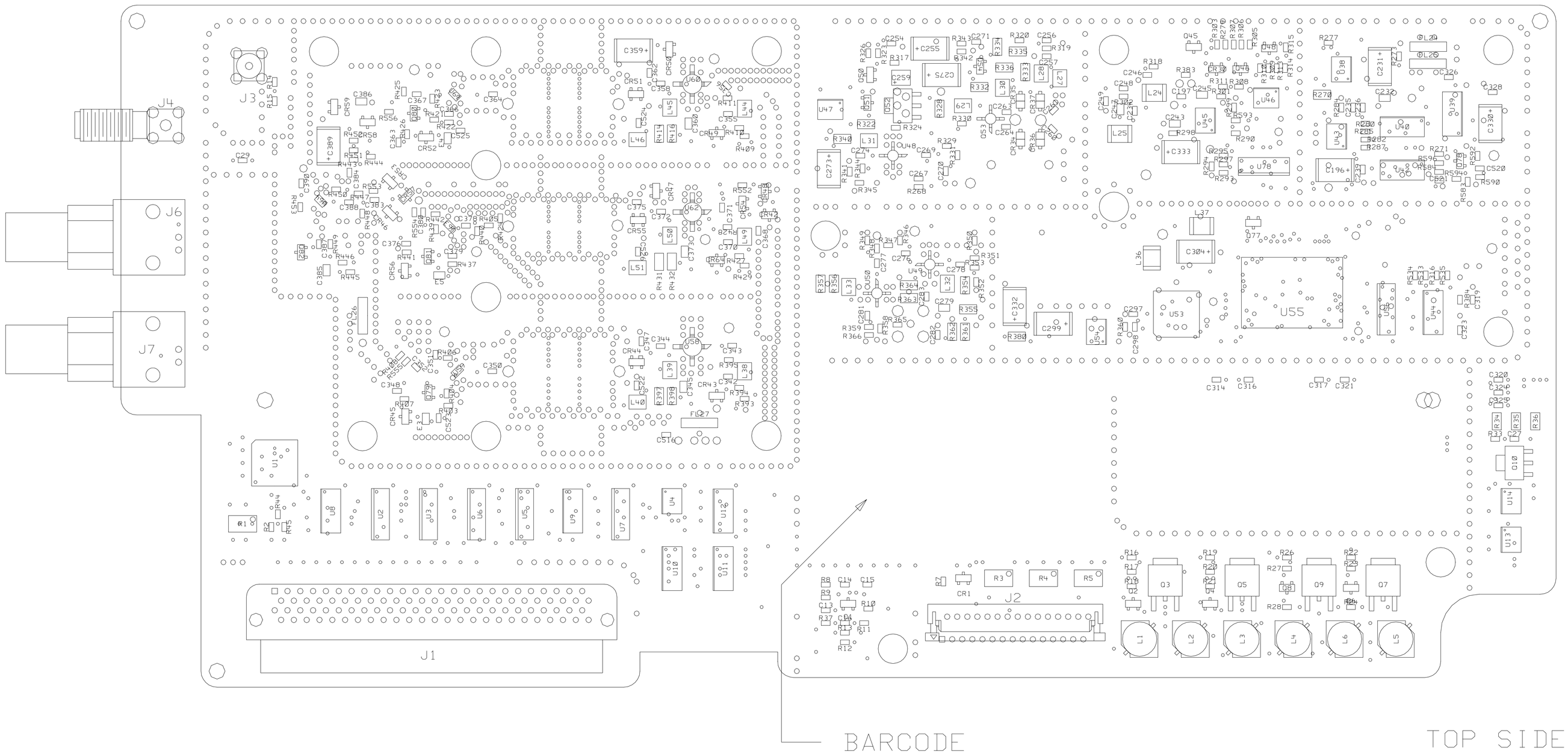

NOTE: (UNLESS OTHERWISE SPECIFIED)

1 USE RAW BOARD PART NUMBER E4401-20095.
2 PART NUMBERS 9135-0461 (FL1, FL23-27) MUST NOT BE EXPOSED TO HALIDE CONTAINING ACID FLUXES.
3 DO NOT LOAD J4, J6, J7 and R45

SEE E4401-63095 MATERIAL LIST

AGILENT TECHNOLOGIES
RESTRICTED
THIS DOCUMENT CONTAINS CONFIDENTIAL, PROPRIETARY INFORMATION THAT IS AGILENT TECHNOLOGIES PROPERTY. DO NOT DISCLOSE TO OR DUPLICATE FOR OTHERS EXCEPT AS AUTHORIZED BY AGILENT TECHNOLOGIES.

UNLESS OTHERWISE SPECIFIED, DIMENSIONS ARE IN INCHES.
TOLERANCES: XX.XXX ±.010 XX.XX ±.02
THIRD ANGLE PROJECTION
DO NOT SCALE THIS DRAWING

DRAWN BY	R ODAY	7-10-98 DATE
ENGINEER/CHECKER	Brown	7-10-98 DATE
RELEASE TO PROD.		DATE
SUPERSEDES DWG.		

TITLE: ASSEMBLY, PWB
TRACKING GEN CONTROL

FILENAME	a1aea095
SCALE	None
SHEET 1 OF 2	E4401-63095 PART NUMBER
	D-E4401-63095-2

Agilent