Agilent Technologies
ESA Spectrum Analyzers & EMC Analyzers
Component-Level Information

Agilent Part Number E4401-90310

Table of Contents

Refer to Volume 1 for A1A1 through A7

Reference Designator	Description	Agilent Part Number
A7A1	IF, Sweep and Video Ports (Option A4J)	E4401-60096
A7A2	GPIB/Parallel (Option A4H)	E4401-60013
A7A3	Serial/Parallel (Option 1AX)	E4401-60014
A7A4	Frequency Extension	E4404-60001
A7A5	Fast ADC (Option AYX)	E4401-60083
A7A6	FM Demod (Option BAA)	E4401-60082
A7A7	Digital Demod DSP	E4401-60088
A7A8	Digital Demod RF	E4401-60224
A7A11	Quasi Peak Detector	E7401-60003
A8	1.5 GHz RF (50 Ohm)	E4401-60203
A8	1.5 GHz RF (75 Ohm)	E4401-60100
A8A1A1	Reference/Third Converter (3.0 GHz)	E4403-60001
A8A1A1	Reference/Third Converter (3.0 GHz), PFR	E4403-60053
A8A1	Precision Frequency Reference	E4401-60036
A8A1A2	3.0 GHz Front End/LO	E4403-60057

Printed April 2001 **Volume 2 of 2**

Notice

Hewlett-Packard to Agilent Technologies Transition

This documentation supports a product that previously shipped under the Hewlett-Packard company brand name. The brand name has now been changed to Agilent Technologies. The two products are functionally identical, only our name has changed. The document still includes references to Hewlett-Packard products, some of which have been transitioned to Agilent Technologies.

Agilent Technologies

Printed in Malaysia March 2000

Component-Level Information Packet for E4401-60096

IF, Sweep and Video Ports (Option A4J)

Agilent Technologies

Agilent Part Number: E4401-90125
Printed in Malaysia April 2001

Notice

The information contained in this document is subject to change without notice. Agilent Technologies makes no warranty of any kind with regard to this material, including but not limited to, the implied warranties of merchantability and fitness for a particular purpose. Agilent Technologies shall not be liable for errors contained herein or for incidental or consequential damages in connection with the furnishing, performance, or use of this material.

© Copyright Agilent Technologies Inc. 2000, 2001
All Rights Reserved. Reproduction, adaptation, or translation without prior written permission is prohibited, except as allowed under the copyright laws.

Agilent Part Number E4401-60096
IF, Sweep and Video Ports (Option A4J)

Reference Designator	Agilent Part Number	Qty	Description	Mgr Code	Mfr Part Number
C1	0180-4287	1	CAP-FXD 10uF +-20% 35 V TA	02010	TAJD106M035
C2	0160-7798	1	CAP-FXD 0.1uF +-10% 50 V CER X7R	06352	C2012X7R1H104K
C3	0180-4287	1	CAP-FXD 10uF +-20% 35 V TA	02010	TAJD106M035
C4	0160-7798	1	CAP-FXD 0.1uF +-10% 50 V CER X7R	06352	C2012X7R1H104K
C5	0160-7798	1	CAP-FXD 0.1uF +-10% 50 V CER X7R	06352	C2012X7R1H104K
C6	0160-7798	1	CAP-FXD 0.1uF +-10% 50 V CER X7R	06352	C2012X7R1H104K
C7	0160-7798	1	CAP-FXD 0.1uF +-10% 50 V CER X7R	06352	C2012X7R1H104K
C8	0160-7798	1	CAP-FXD 0.1uF +-10% 50 V CER X7R	06352	C2012X7R1H104K
C9	0160-7751	1	CAP-FXD 0.01uF +-10% 50 V CER X7R	02010	06035C103KAT
C10	0160-7751	1	CAP-FXD 0.01uF +-10% 50 V CER X7R	02010	06035C103KAT
C11	0160-7798	1	CAP-FXD 0.1uF +-10% 50 V CER X7R	06352	C2012X7R1H104K
C12	0160-7798	1	CAP-FXD 0.1uF +-10% 50 V CER X7R	06352	C2012X7R1H104K
C13	0160-7798	1	CAP-FXD 0.1uF +-10% 50 V CER X7R	06352	C2012X7R1H104K
C14	0160-7798	1	CAP-FXD 0.1uF +-10% 50 V CER X7R	06352	C2012X7R1H104K
C15	0180-3755	1	CAP-FXD 33uF +-20% 10 V TA	02010	TAJD336M010
C16	0180-3755	1	CAP-FXD 33uF +-20% 10 V TA	02010	TAJD336M010
C17	0160-7798	1	CAP-FXD 0.1uF +-10% 50 V CER X7R	06352	C2012X7R1H104K
C18	0160-7798	1	CAP-FXD 0.1uF +-10% 50 V CER X7R	06352	C2012X7R1H104K
C19	0160-7798	1	CAP-FXD 0.1uF +-10% 50 V CER X7R	06352	C2012X7R1H104K
C20	0160-7798	1	CAP-FXD 0.1uF +-10% 50 V CER X7R	06352	C2012X7R1H104K
C21	0160-7798	1	CAP-FXD 0.1uF +-10% 50 V CER X7R	06352	C2012X7R1H104K
C22	0160-7798	1	CAP-FXD 0.1uF +-10% 50 V CER X7R	06352	C2012X7R1H104K
C23	0160-7798	1	CAP-FXD 0.1uF +-10% 50 V CER X7R	06352	C2012X7R1H104K
C24	0160-7798	1	CAP-FXD 0.1uF +-10% 50 V CER X7R	06352	C2012X7R1H104K
C25	0160-7798	1	CAP-FXD 0.1uF +-10% 50 V CER X7R	06352	C2012X7R1H104K

**Indicates factory-selected value*

Agilent Part Number E4401-60096
IF, Sweep and Video Ports (Option A4J)

Reference Designator	Agilent Part Number	Qty	Description	Mgr Code	Mfr Part Number
C26	0160-7798	1	CAP-FXD 0.1uF +-10% 50 V CER X7R	06352	C2012X7R1H104K
C27	0160-7798	1	CAP-FXD 0.1uF +-10% 50 V CER X7R	06352	C2012X7R1H104K
C28	0160-7798	1	CAP-FXD 0.1uF +-10% 50 V CER X7R	06352	C2012X7R1H104K
C29	0160-7798	1	CAP-FXD 0.1uF +-10% 50 V CER X7R	06352	C2012X7R1H104K
C30	0160-7798	1	CAP-FXD 0.1uF +-10% 50 V CER X7R	06352	C2012X7R1H104K
C31	0160-7798	1	CAP-FXD 0.1uF +-10% 50 V CER X7R	06352	C2012X7R1H104K
C32	0160-7798	1	CAP-FXD 0.1uF +-10% 50 V CER X7R	06352	C2012X7R1H104K
C33	0160-7798	1	CAP-FXD 0.1uF +-10% 50 V CER X7R	06352	C2012X7R1H104K
C34	0160-7798	1	CAP-FXD 0.1uF +-10% 50 V CER X7R	06352	C2012X7R1H104K
C35	0160-7855	1	CAP-FXD 33pF +-5% 50 V CER C0G	02010	06035A330JAT
C36	0160-7798	1	CAP-FXD 0.1uF +-10% 50 V CER X7R	06352	C2012X7R1H104K
C37	0160-7798	1	CAP-FXD 0.1uF +-10% 50 V CER X7R	06352	C2012X7R1H104K
C38	0160-7798	1	CAP-FXD 0.1uF +-10% 50 V CER X7R	06352	C2012X7R1H104K
C39	0160-7798	1	CAP-FXD 0.1uF +-10% 50 V CER X7R	06352	C2012X7R1H104K
C40	0160-7798	1	CAP-FXD 0.1uF +-10% 50 V CER X7R	06352	C2012X7R1H104K
CR1	1906-0291	1	DIODE-DUAL 70V 100MA T0-236AA	02910	BAV99
CR2	1906-0291	1	DIODE-DUAL 70V 100MA T0-236AA	02910	BAV99
CR3	1906-0291	1	DIODE-DUAL 70V 100MA T0-236AA	02910	BAV99
CR4	1906-0291	1	DIODE-DUAL 70V 100MA T0-236AA	02910	BAV99
CR5	1906-0291	1	DIODE-DUAL 70V 100MA T0-236AA	02910	BAV99
J1	1252-5906	1	CONN-RECT MICRORBN 100-CKT 100-CONT	01380	2-557101-5
J2	1250-1842	1	CONNECTOR-RF BNC FEMALE PC-W-STDFS	01380	227677-1
J3	1250-1842	1	CONNECTOR-RF BNC FEMALE PC-W-STDFS	01380	227677-1
J4	1250-1842	1	CONNECTOR-RF BNC FEMALE PC-W-STDFS	01380	227677-1
J5	1250-1842	1	CONNECTOR-RF BNC FEMALE PC-W-STDFS	01380	227677-1

**Indicates factory-selected value*

Agilent Part Number E4401-60096
IF, Sweep and Video Ports (Option A4J)

Reference Designator	Agilent Part Number	Qty	Description	Mgr Code	Mfr Part Number
J6	1250-1842	1	CONNECTOR-RF BNC FEMALE PC-W-STDFS	01380	227677-1
L1	9140-1736	1	INDUCTOR 47uH +20% -20% 7.3W-mmX7.3LG-mm	06353	636CY-470M
L2	9140-1736	1	INDUCTOR 47uH +20% -20% 7.3W-mmX7.3LG-mm	06353	636CY-470M
L3	9140-1736	1	INDUCTOR 47uH +20% -20% 7.3W-mmX7.3LG-mm	06353	636CY-470M
L4	9140-1736	1	INDUCTOR 47uH +20% -20% 7.3W-mmX7.3LG-mm	06353	636CY-470M
MP2	E4401-00058	1	PNL-DRESS STD10	28480	E4401-00058
MP3	7100-1316	1	CAN-SQ	01932	HU 4280-.437 + TABS
MP4	7100-1316	1	CAN-SQ	01932	HU 4280-.437 + TABS
MP5	2950-0054	1	NUT-HEX-DBL-CHAM 1/2-28-THD .125-IN-THK	04567	2950-0054
MP6	2950-0054	1	NUT-HEX-DBL-CHAM 1/2-28-THD .125-IN-THK	04567	2950-0054
MP7	2950-0054	1	NUT-HEX-DBL-CHAM 1/2-28-THD .125-IN-THK	04567	2950-0054
MP8	2950-0054	1	NUT-HEX-DBL-CHAM 1/2-28-THD .125-IN-THK	04567	2950-0054
MP9	2950-0054	1	NUT-HEX-DBL-CHAM 1/2-28-THD .125-IN-THK	04567	2950-0054
MP11	0515-2005	1	SCREW-MACHINE ASSEMBLY M2.5 X 0.45	05610	0515-2005
MP12	5040-6843	1	EXTRACTOR RING	28480	5040-6843
MP13	5000-9043	1	EXTR PIN .062 BD	28480	5000-9043
Q1	1854-1037	1	TRANSISTOR NPN SI TO-236AA PD350MW	00746	SST3904T116
R1	0699-3918	1	RESISTOR 51.1 +-1% .063W TKF TC0+-200	00746	MCR03-F-51R1
R2	1810-1940	1	NET-RES 4 220.0 OHM 8-PIN	00746	MNR34J221
R3	1810-1940	1	NET-RES 4 220.0 OHM 8-PIN	00746	MNR34J221
R4	1810-1581	1	NET-RES 4 33.0 OHM 8-PIN	09891	CN2B4TE8M330J
R5	0699-3918	1	RESISTOR 51.1 +-1% .063W TKF TC0+-200	00746	MCR03-F-51R1
R6	0699-3978	1	RESISTOR 21.5K +-1% .063W TKF TC0+-200	09891	RK73H1J2152F

**Indicates factory-selected value*

Agilent Part Number E4401-60096
IF, Sweep and Video Ports (Option A4J)

Reference Designator	Agilent Part Number	Qty	Description	Mgr Code	Mfr Part Number
R7	0699-3947	1	RESISTOR 1K +-1% .063W TKF TC0+-200	00746	MCR03-F-1001
R8	0699-3947	1	RESISTOR 1K +-1% .063W TKF TC0+-200	00746	MCR03-F-1001
R9	0699-3993	1	RESISTOR 100K +-1% .063W TKF TC0+-200	09891	RK73H1J1003F
R10	0699-3947	1	RESISTOR 1K +-1% .063W TKF TC0+-200	00746	MCR03-F-1001
R11	0699-3924	1	RESISTOR 100 +-1% .063W TKF TC0+-200	00746	MCR03-F-1000
R12	0699-3932	1	RESISTOR 215 +-1% .063W TKF TC0+-200	00746	MCR03-F-2150
R13	0699-3947	1	RESISTOR 1K +-1% .063W TKF TC0+-200	00746	MCR03-F-1001
R14	0699-3970	1	RESISTOR 10K +-1% .063W TKF TC0+-200	09891	RK73H1J1002F
R15	0699-3978	1	RESISTOR 21.5K +-1% .063W TKF TC0+-200	09891	RK73H1J2152F
R16	0699-1423	1	RESISTOR 215 +-1% .125W TKF TC0+-100	05524	CRCW12062150F
R17	0699-3946	1	RESISTOR 909 +-1% .063W TKF TC0+-200	00746	MCR03-F-9090
R18	0699-1423	1	RESISTOR 215 +-1% .125W TKF TC0+-100	05524	CRCW12062150F
R19	0699-1430	1	RESISTOR 422 +-1% .125W TKF TC0+-100	05524	CRCW12064220F
R20	0699-1430	1	RESISTOR 422 +-1% .125W TKF TC0+-100	05524	CRCW12064220F
R21	1810-1578	1	NET-RES 4 1.0K OHM 8-PIN	00746	MNR34K5ABJ102
R22	0699-3967	1	RESISTOR 7.5K +-1% .063W TKF TC0+-200	09891	RK73H1J7501F
R23	0699-3973	1	RESISTOR 13.3K +-1% .063W TKF TC0+-200	09891	RK73H1J1332F
R24	0699-3918	1	RESISTOR 51.1 +-1% .063W TKF TC0+-200	00746	MCR03-F-51R1
R25	0699-3947	1	RESISTOR 1K +-1% .063W TKF TC0+-200	00746	MCR03-F-1001
R26	0699-3918	1	RESISTOR 51.1 +-1% .063W TKF TC0+-200	00746	MCR03-F-51R1
R27	0699-3970	1	RESISTOR 10K +-1% .063W TKF TC0+-200	09891	RK73H1J1002F
R28	1810-1578	1	NET-RES 4 1.0K OHM 8-PIN	00746	MNR34K5ABJ102
R29	0699-3971	1	RESISTOR 11K +-1% .063W TKF TC0+-200	00746	MCR03-F-1102
R30	0699-3970	1	RESISTOR 10K +-1% .063W TKF TC0+-200	09891	RK73H1J1002F
U1	1818-5236	1	IC 4K-BIT EEPROM 500-NS CMOS	04078	M93C66-MN6

**Indicates factory-selected value*

Agilent Part Number E4401-60096
IF, Sweep and Video Ports (Option A4J)

Reference Designator	Agilent Part Number	Qty	Description	Mgr Code	Mfr Part Number
U2	1826-2786	1	IC OP AMP VID-SPCL-FCTN SINGLE 8 PIN	03285	AD810AR
U3	E4401-80012	1	PAL	28480	E4401-80012
U4	1826-2786	1	IC OP AMP VID-SPCL-FCTN SINGLE 8 PIN	03285	AD810AR
U5	1820-6154	1	IC-PROGRAMMABLE INTERVAL TIMER	28480	1820-6154
U6	1820-8941	1	IC MUXR/DATA-SEL CMOS/ACT 4-TO-1-LINE	02237	74ACT253SCX.
U7	1821-0055	1	IC SCHMITT-TRIG CMOS/ACT NAND QUAD 2-INP	36633	MC74ACT132D
U8	1820-6277	1	IC SHF-RGTR CMOS/HC SYNC/ASYNC SERIAL-IN	02237	MM74HC595M
U9	1820-6277	1	IC SHF-RGTR CMOS/HC SYNC/ASYNC SERIAL-IN	02237	MM74HC595M
U10	1826-1950	1	IC COMPARATOR HS SINGLE 8 PIN PLSTC-SOIC	10858	LT1016CS8
U11	1820-7247	1	IC CNTR CMOS/AC BIN UP/DOWN SYNC/ASYNC	02237	74AC191SCX.
U12	1820-7247	1	IC CNTR CMOS/AC BIN UP/DOWN SYNC/ASYNC	02237	74AC191SCX.
U13	1820-7247	1	IC CNTR CMOS/AC BIN UP/DOWN SYNC/ASYNC	02237	74AC191SCX.
U14	1826-2153	1	D/A 12-BIT 20-PLCC CMOS	03285	AD7545AKP
U15	1826-2176	1	IC OP AMP PRCN DUAL 8 PIN PLSTC-SOIC	03285	AD712JR
U16	1826-1687	1	IC PWR MGT-V-REF-FXD 9.95/10.05V 8 PINS	10858	LT1021DCS8-10

**Indicates factory-selected value*

5300 E4401-60096-2

SYM	REVISIONS	APPROVED	DATE
A	AS ISSUED /CO		

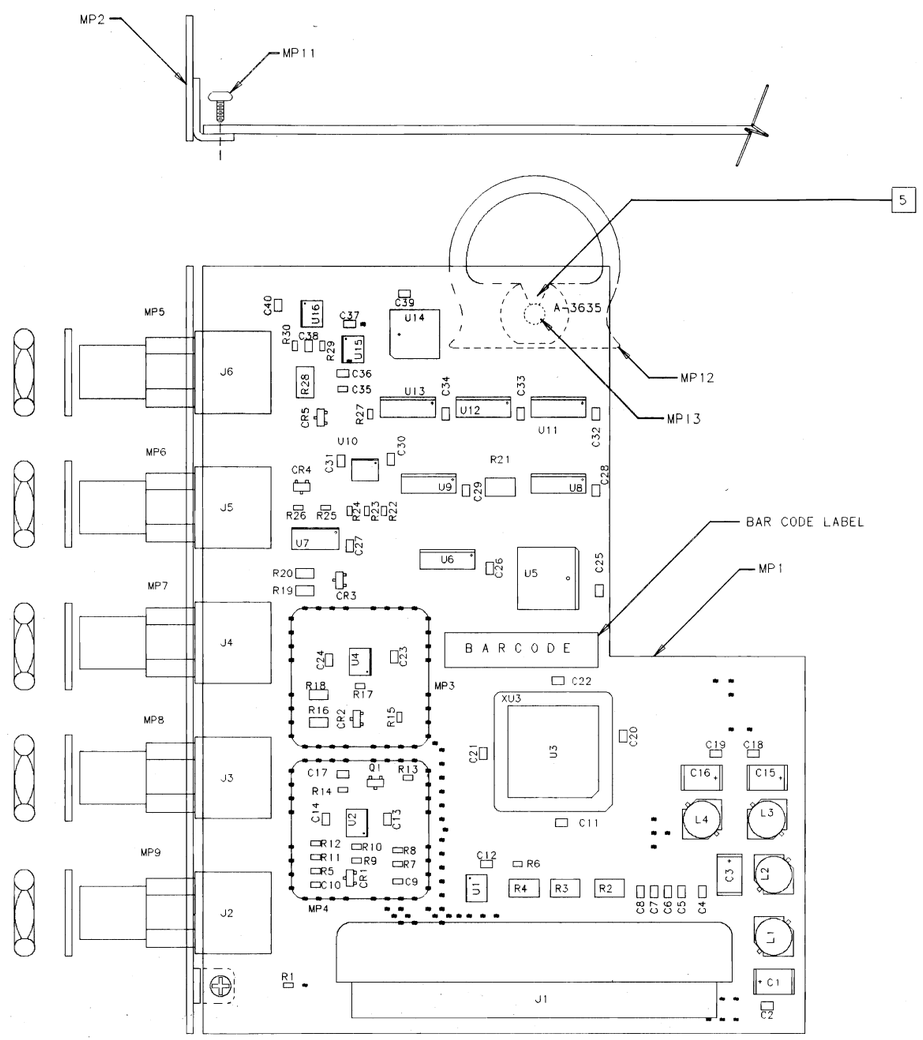

NOTES: UNLESS OTHERWISE SPECIFIED
1 SEE MATERIAL LIST: E4401-60096
2 THIS ASSEMBLY USES RAW BOARD NUMBER: E4401-20011
3 THIS BOARD CONTAINS .010" VIAS IN PADS: YES ☐ NO ☒
4 THIS ASSEMBLY CONTAINS CROSSHATCHED COMPONENTS WHICH ARE NOT LOADED: YES ☐ NO ☒
5 OBSCURE ASSY NO. USING PERMANENT MARKER.

TORQUE MATRIX	
REF DES	TORQUE VALUE
MP5	20 IN-LBS
MP6	20 IN-LBS
MP7	20 IN-LBS
MP8	20 IN-LBS
MP9	20 IN-LBS
MP11	5 IN-LBS

TOP SIDE

HP PROPRIETARY
THIS DOCUMENT CONTAINS CONFIDENTIAL, PROPRIETARY INFORMATION THAT IS HEWLETT-PACKARD (HP) PROPERTY. DO NOT DISCLOSE TO OR DUPLICATE FOR OTHERS EXCEPT AS AUTHORIZED BY HP.

UNLESS OTHERWISE SPECIFIED, DIMENSIONS ARE IN INCHES
TOLERANCES: XX.XXX .010 XX.XX .02
THIRD ANGLE PROJECTION
DO NOT SCALE THIS DRAWING

DRAWN BY DATE
ENGINEER/CHECKER DATE
RELEASE TO PROD. DATE
SUPERSEDES DWG.

TITLE: ASSEMBLY, PWB STD10

MENTOR FILENAME
SCALE NONE
SHEET 1 OF 1

HEWLETT PACKARD
E4401-60096
PART NUMBER
D-E4401-60096-2

D-E4401-60096-1

REV	INFORMATION	APPROVED	DATE
A	AS ISSUED		

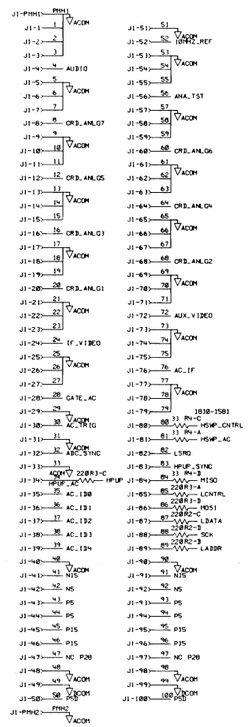

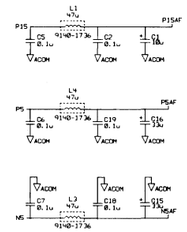

ADDRESS AND CONTROL

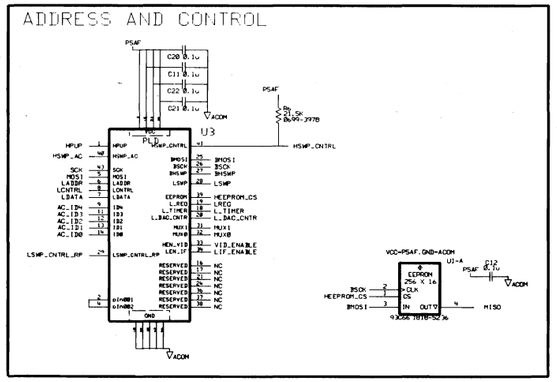

10 MHZ

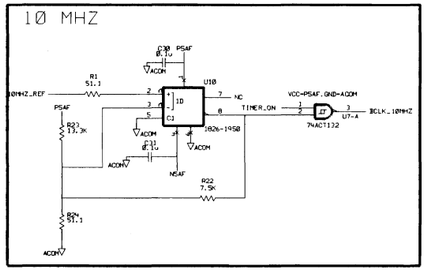

REAR PANEL MOUNTING HOLES

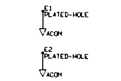

SWEEP_RAMP

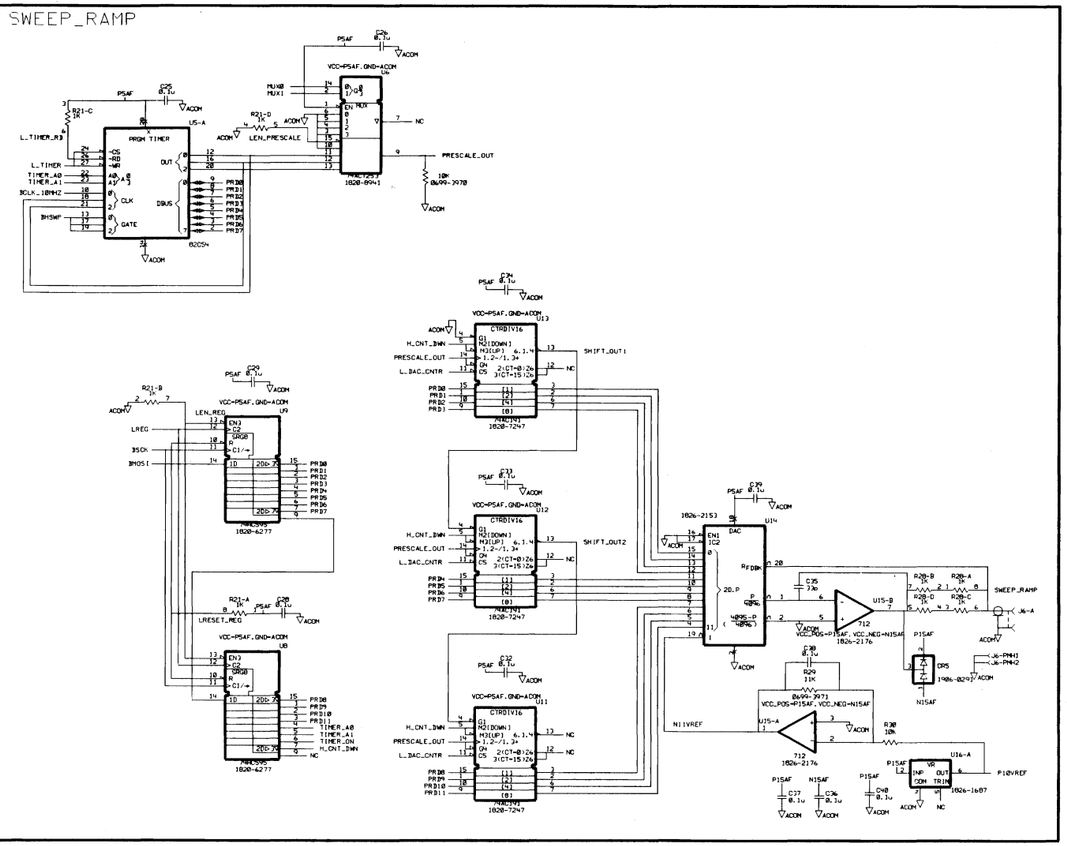

HSWEEP_CONTROL

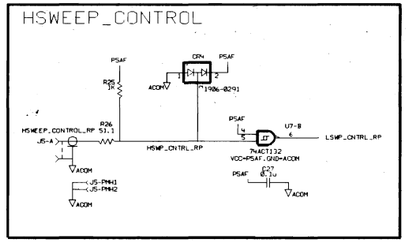

HSWEEP

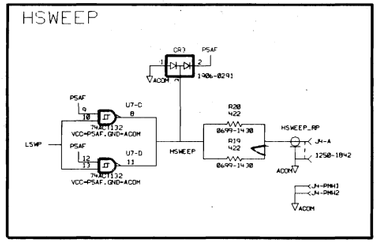

AUX VIDEO

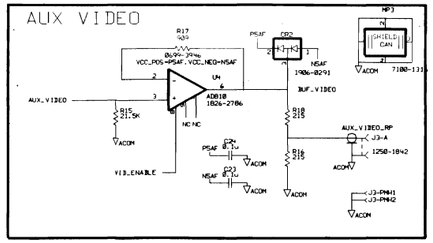

AUX IF

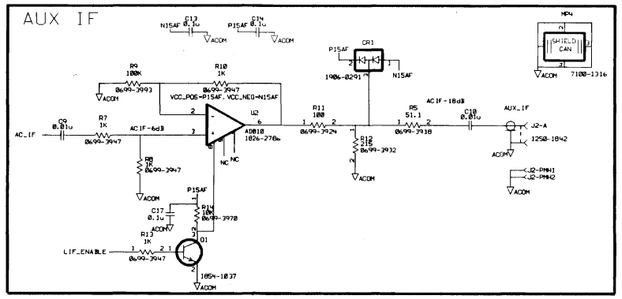

HP RESTRICTED
THIS DOCUMENT CONTAINS CONFIDENTIAL, PROPRIETARY INFORMATION THAT IS HEWLETT-PACKARD (HP) PROPERTY. DO NOT DISCLOSE TO OR DUPLICATE FOR OTHERS EXCEPT AS AUTHORIZED BY HP.

LAST CHECKED	DATE	SCHEMATIC, PMA Standard I/O IF and Sweep Ports	HEWLETT PACKARD 5180
ENGINEER	SHEET 1 OF 1	TITLE	
DRAWN BY	SIZE D	HP_EW01/60096/AA3635/stdio sheet1 PATHNAME	E4401-60096 PART NUMBER
	AA3635 ASSY REV	A3635 MFG REV	1 PAGE 2 OF	D-E4401-60096-1 DWG NO

REVISIONS
SEE PAGE 1 FOR REVISION HISTORY

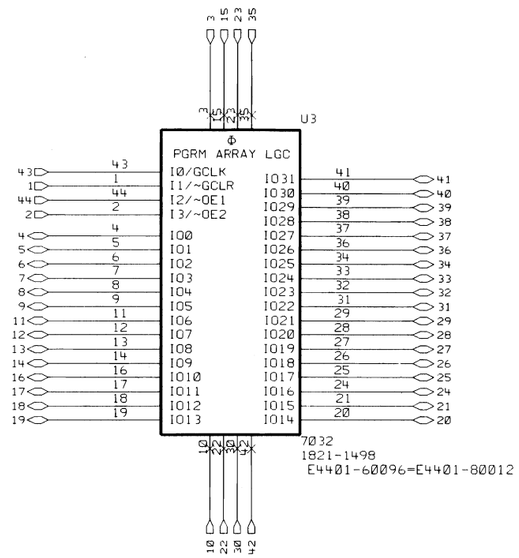

HP RESTRICTED

THIS DOCUMENT CONTAINS CONFIDENTIAL. PROPRIETARY INFORMATION THAT IS HEWLETT-PACKARD (HP) PROPERTY. DO NOT DISCLOSE TO OR DUPLICATE FOR OTHERS EXCEPT AS AUTHORIZED BY HP.

LAST CHECKED	DATE	SCHEMATIC. PWA Standard I/O GENERATE LBIO/LTIO/HSWP SERIAL-PARALLEL CONTROL	HEWLETT PACKARD 5300
ENGINEER	SHEET 1 OF 1	TITLE	
DRAWN BY	SIZE B	$HP_E4401/60096/AA3635/stdIo.pal sheet1 PATHNAME	E4401-60096 PART NUMBER
	AA3635 ASSY. REV	A3635 BRD. REV — PAGE 2 OF 2	B-E4401-60096-1 DWG. NO.

Component-Level Information Packet for E4401-60013

GPIB/Parallel (Option A4H)

Agilent Technologies

Agilent Part Number: E4401-90025
Printed in Malaysia April 2001

Notice

The information contained in this document is subject to change without notice. Agilent Technologies makes no warranty of any kind with regard to this material, including but not limited to, the implied warranties of merchantability and fitness for a particular purpose. Agilent Technologies shall not be liable for errors contained herein or for incidental or consequential damages in connection with the furnishing, performance, or use of this material.

© Copyright Agilent Technologies Inc. 2000, 2001
All Rights Reserved. Reproduction, adaptation, or translation without prior written permission is prohibited, except as allowed under the copyright laws.

Agilent Part Number E4401-60013
GPIB/Parallel (Option A4H)

Reference Designator	Agilent Part Number	Qty	Description	Mgr Code	Mfr Part Number
C1	0160-7798	1	CAP-FXD 0.1uF +-10% 50 V CER X7R	06352	C2012X7R1H104K
C2	0160-7798	1	CAP-FXD 0.1uF +-10% 50 V CER X7R	06352	C2012X7R1H104K
C3	0160-7849	1	CAP-FXD 220pF +-5% 50 V CER C0G	02010	06035A221JAT
C4	0160-7849	1	CAP-FXD 220pF +-5% 50 V CER C0G	02010	06035A221JAT
C5	0160-7849	1	CAP-FXD 220pF +-5% 50 V CER C0G	02010	06035A221JAT
C6	0160-7849	1	CAP-FXD 220pF +-5% 50 V CER C0G	02010	06035A221JAT
C7	0160-7849	1	CAP-FXD 220pF +-5% 50 V CER C0G	02010	06035A221JAT
C8	0160-7849	1	CAP-FXD 220pF +-5% 50 V CER C0G	02010	06035A221JAT
C9	0160-7849	1	CAP-FXD 220pF +-5% 50 V CER C0G	02010	06035A221JAT
C10	0160-7849	1	CAP-FXD 220pF +-5% 50 V CER C0G	02010	06035A221JAT
C11	0160-7849	1	CAP-FXD 220pF +-5% 50 V CER C0G	02010	06035A221JAT
C12	0160-7849	1	CAP-FXD 220pF +-5% 50 V CER C0G	02010	06035A221JAT
C13	0160-7849	1	CAP-FXD 220pF +-5% 50 V CER C0G	02010	06035A221JAT
C14	0160-7849	1	CAP-FXD 220pF +-5% 50 V CER C0G	02010	06035A221JAT
C15	0160-7849	1	CAP-FXD 220pF +-5% 50 V CER C0G	02010	06035A221JAT
C16	0160-7849	1	CAP-FXD 220pF +-5% 50 V CER C0G	02010	06035A221JAT
C17	0160-7849	1	CAP-FXD 220pF +-5% 50 V CER C0G	02010	06035A221JAT
C18	0160-7849	1	CAP-FXD 220pF +-5% 50 V CER C0G	02010	06035A221JAT
C19	0160-7849	1	CAP-FXD 220pF +-5% 50 V CER C0G	02010	06035A221JAT
C20	0160-7798	1	CAP-FXD 0.1uF +-10% 50 V CER X7R	06352	C2012X7R1H104K
C21	0160-7798	1	CAP-FXD 0.1uF +-10% 50 V CER X7R	06352	C2012X7R1H104K
C22	0160-7798	1	CAP-FXD 0.1uF +-10% 50 V CER X7R	06352	C2012X7R1H104K
C23	0160-7798	1	CAP-FXD 0.1uF +-10% 50 V CER X7R	06352	C2012X7R1H104K
C25	0160-7798	1	CAP-FXD 0.1uF +-10% 50 V CER X7R	06352	C2012X7R1H104K
C26	0160-7798	1	CAP-FXD 0.1uF +-10% 50 V CER X7R	06352	C2012X7R1H104K
C27	0160-7798	1	CAP-FXD 0.1uF +-10% 50 V CER X7R	06352	C2012X7R1H104K
C29	0160-7798	1	CAP-FXD 0.1uF +-10% 50 V CER X7R	06352	C2012X7R1H104K
C30	0180-4287	1	CAP-FXD 10uF +-20% 35 V TA	02010	TAJD106M035

**Indicates factory-selected value*

Agilent Part Number E4401-60013
GPIB/Parallel (Option A4H)

Reference Designator	Agilent Part Number	Qty	Description	Mgr Code	Mfr Part Number
C32	0160-7798	1	CAP-FXD 0.1uF +-10% 50 V CER X7R	06352	C2012X7R1H104K
C33	0160-7798	1	CAP-FXD 0.1uF +-10% 50 V CER X7R	06352	C2012X7R1H104K
C34	0160-7798	1	CAP-FXD 0.1uF +-10% 50 V CER X7R	06352	C2012X7R1H104K
C35	0160-7798	1	CAP-FXD 0.1uF +-10% 50 V CER X7R	06352	C2012X7R1H104K
C36	0160-7798	1	CAP-FXD 0.1uF +-10% 50 V CER X7R	06352	C2012X7R1H104K
C37	0160-7798	1	CAP-FXD 0.1uF +-10% 50 V CER X7R	06352	C2012X7R1H104K
C38	0160-7798	1	CAP-FXD 0.1uF +-10% 50 V CER X7R	06352	C2012X7R1H104K
C39	0160-7798	1	CAP-FXD 0.1uF +-10% 50 V CER X7R	06352	C2012X7R1H104K
C40	0180-4287	1	CAP-FXD 10uF +-20% 35 V TA	02010	TAJD106M035
CR1	1906-0437	1	DIODE-ARRAY 15V MS-013AC	02910	BZA100
E2	9170-1421	1	CORE-SHIELDING BEAD	06352	HF50ACB-322513
E3	9170-1421	1	CORE-SHIELDING BEAD	06352	HF50ACB-322513
E4	9170-1421	1	CORE-SHIELDING BEAD	06352	HF50ACB-322513
FL1	9135-0461	1	FILTER-SUPPRESSION EMI; SMT; WORKING	09939	NFM61R10T102M 00-621
FL2	9135-0461	1	FILTER-SUPPRESSION EMI; SMT; WORKING	09939	NFM61R10T102M 00-621
J1	1252-5906	1	CONN-RECT MICRORBN 100-CKT 100-CONT	01380	2-557101-5
J2	1252-1201	1	CONN-RECT D-SUBMIN 25-CKT 25-CONT	11971	DM11323-D4
J3	1252-2161	1	CONN-RECT MICRORBN 24-CKT 24-CONT	01380	554923-2
L1	9140-1736	1	INDUCTOR 47uH +20% -20% 7.3W-mmX7.3LG-mm	06353	E636CY-470M-P3
L4	9140-1736	1	INDUCTOR 47uH +20% -20% 7.3W-mmX7.3LG-mm	06353	E636CY-470M-P3
MP3	0380-0643	1	STANDOFF-HEX .255-IN-LG 6-32-THD	02121	0380-0643
MP4	0380-0643	1	STANDOFF-HEX .255-IN-LG 6-32-THD	02121	0380-0643
MP5	2190-0017	1	WASHER-LK HLCL NO. 8 .168-IN-ID-.31OD	13962	2190-0017
MP6	2190-0017	1	WASHER-LK HLCL NO. 8 .168-IN-ID-.31OD	13962	2190-0017
MP7	1251-2942	1	SCREW LOCK KIT-SUBMIN D CONN	02121	ST9422-36
MP8	1251-2942	1	SCREW LOCK KIT-SUBMIN D CONN	02121	ST9422-36
MP9	0515-2005	1	SCREW-MACHINE ASSEMBLY M2.5 X 0.45	05610	0515-2005

 **Indicates factory-selected value*

Agilent Part Number E4401-60013
GPIB/Parallel (Option A4H)

Reference Designator	Agilent Part Number	Qty	Description	Mgr Code	Mfr Part Number
MP10	5040-6843	1	EXTRACTOR RING	28480	5040-6843
MP11	5000-9043	1	EXTR PIN .062 BD	28480	5000-9043
MP12	E4401-00056	1	PNL-DRESS HPIB	28480	E4401-00056
R1	1810-1065	1	NET-RES 15 1.0K OHM 16-PIN	05524	SOMC-16-01-102G
R2	1810-1682	1	NET-RES 8 4.7K OHM 10-PIN	00746	MNR35J5RJ472
R3	0699-3970	1	RESISTOR 10K +-1% .063W TKF TC0+-200	09891	RK73H1J1002F
R4	1810-1581	1	NET-RES 4 33.0 OHM 8-PIN	00746	MNR34K5AWJ330
R5	1810-1581	1	NET-RES 4 33.0 OHM 8-PIN	00746	MNR34K5AWJ330
R6	1810-1581	1	NET-RES 4 33.0 OHM 8-PIN	00746	MNR34K5AWJ330
R7	1810-1581	1	NET-RES 4 33.0 OHM 8-PIN	00746	MNR34K5AWJ330
R8	1810-1581	1	NET-RES 4 33.0 OHM 8-PIN	00746	MNR34K5AWJ330
R9	0699-3970	1	RESISTOR 10K +-1% .063W TKF TC0+-200	09891	RK73H1J1002F
R10	0699-3970	1	RESISTOR 10K +-1% .063W TKF TC0+-200	09891	RK73H1J1002F
R11	1810-1360	1	NET-RES 8 10.0K OHM 16-PIN	05524	SOMC-1603-103G
R12	0699-3970	1	RESISTOR 10K +-1% .063W TKF TC0+-200	09891	RK73H1J1002F
R13	1810-1581	1	NET-RES 4 33.0 OHM 8-PIN	00746	MNR34K5AWJ330
R14	1810-1581	1	NET-RES 4 33.0 OHM 8-PIN	00746	MNR34K5AWJ330
R15	1810-1581	1	NET-RES 4 33.0 OHM 8-PIN	00746	MNR34K5AWJ330
R16	1810-1360	1	NET-RES 8 10.0K OHM 16-PIN	05524	SOMC-1603-103G
R17	1810-1581	1	NET-RES 4 33.0 OHM 8-PIN	00746	MNR34K5AWJ330
R18	1810-1581	1	NET-RES 4 33.0 OHM 8-PIN	00746	MNR34K5AWJ330
R19	1810-1581	1	NET-RES 4 33.0 OHM 8-PIN	00746	MNR34K5AWJ330
R20	1810-1581	1	NET-RES 4 33.0 OHM 8-PIN	00746	MNR34K5AWJ330
R21	1810-1581	1	NET-RES 4 33.0 OHM 8-PIN	00746	MNR34K5AWJ330
R22	0699-3947	1	RESISTOR 1K +-1% .063W TKF TC0+-200	00746	MCR03-F-1001
U1	1820-6814	1	IC-INTERFACE XCVR BIPOLAR INSTRUMENT BUS	01698	SN75ALS161DW
U2	1820-6176	1	IC-INTERFACE XCVR BIPOLAR BUS OCTL	01698	SN75ALS160DW
U3	1821-1721	1	IC-HPIB CONTROLLER	01698	MP9914FNL

**Indicates factory-selected value*

Agilent Part Number E4401-60013
GPIB/Parallel (Option A4H)

Reference Designator	Agilent Part Number	Qty	Description	Mgr Code	Mfr Part Number
U4	1813-0916	1	CLK-OSC-XTAL PRC 5.0-MHZ 0.01%	12768	SG-615P5.000MC
U5	1821-1144	1	IC-SUPER I/O; DUAL UARTs; IEEE 1284; IDE	03406	PC87332VLJ
U6	1813-0710	1	CLK-OSC-XTAL STD 24.0-MHZ 0.01%	12768	SG-615-24.000MC
U9	1820-7796	1	IC DRVR BICMOS/ABT LINE OCTL	02910	74ABT244D
U10	E4401-80009	1	IO ADDRESS PAL	28480	E4401-80009
U11	1820-4687	1	IC GATE TTL/F NOR QUAD 2-INP	01698	SN74F02D

 **Indicates factory-selected value*

5300 D-E4401-60013-2

SYM	REVISIONS	APPROVED	DATE
A	AS ISSUED PER LCN 46. SAT		
B	LCN 53-E4401-102. /RO		

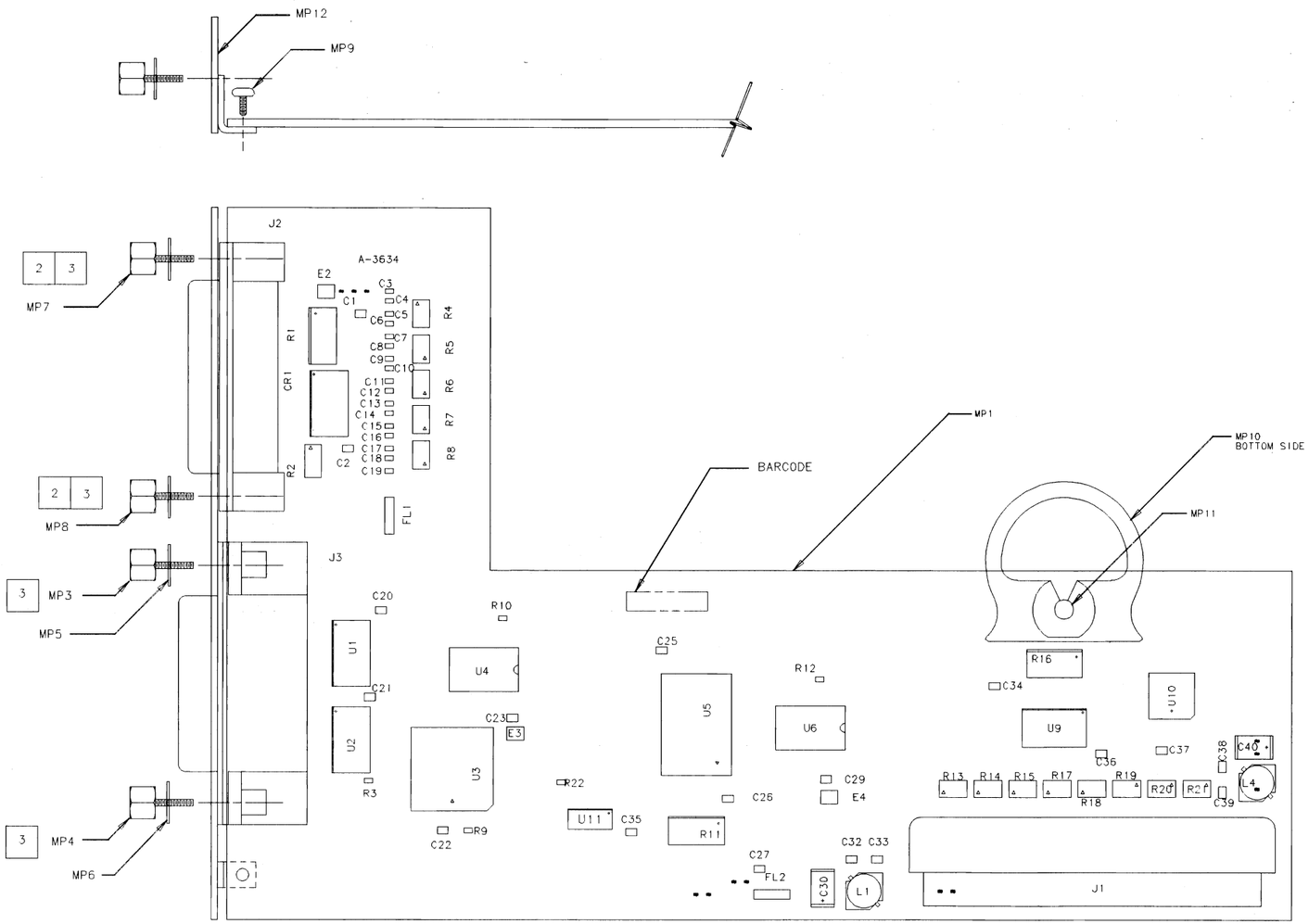

TORQUE MATRIX	
REF DES	TORQUE VALUE
MP3	9 IN-LBS
MP4	9 IN-LBS
MP7	6 IN-LBS
MP8	6 IN-LBS
MP9	5 IN-LBS

NOTES: UNLESS OTHERWISE SPECIFIED.

1. USE RAW BOARD E4401-20013.

2 USE LOCK WASHER ONLY, DO NOT USE FLAT WASHER.

3 USE LOCKTITE 290 (HPPN 0470-0532) ON THREADS MP13

SEE MATERIAL LIST E4401-60013

TOP SIDE

HP PROPRIETARY
THIS DOCUMENT CONTAINS CONFIDENTIAL, PROPRIETARY INFORMATION THAT IS HEWLETT-PACKARD (HP) PROPERTY. DO NOT DISCLOSE TO OR DUPLICATE FOR OTHERS EXCEPT AS AUTHORIZED BY HP.

UNLESS OTHERWISE SPECIFIED, DIMENSIONS ARE IN INCHES.
TOLERANCES: XX.XXX .010, XX.XX .02
THIRD ANGLE PROJECTION
DO NOT SCALE THIS DRAWING

DRAWN BY | DATE
ENGINEER/CHECKER | DATE
RELEASE TO PROD. | DATE
SUPERSEDES DWG.

TITLE: ASSEMBLY, PWB HP1B PARALLEL

MENTOR FILENAME
SCALE NONE
SHEET 1 OF 1
PART NUMBER E4401-60013
D-E4401-60013-2

HEWLETT PACKARD

D-E4401-60013-1

REV	INFORMATION		APPROVED	DATE
A	AS ISSUED PER LCN #46.	SAT		
B	ISSUED PER LCN #72.	SAT		
D	PER PCO 53-12612	IS		

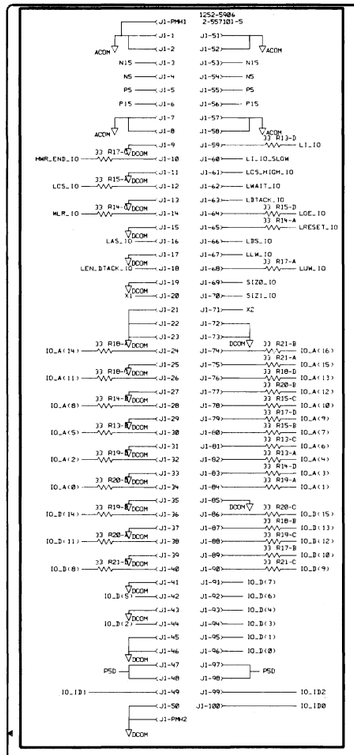

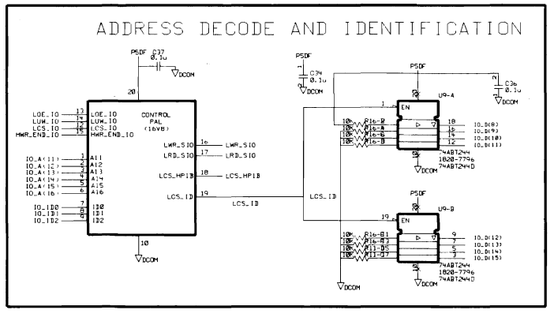

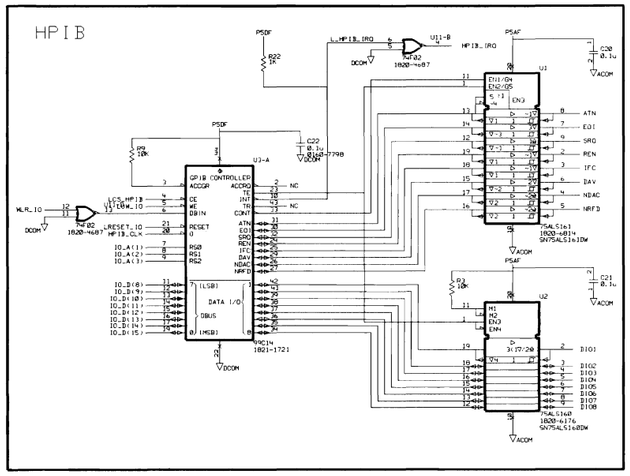

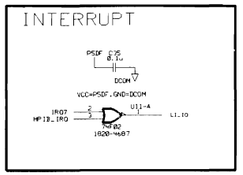

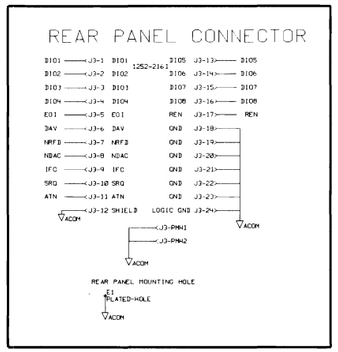

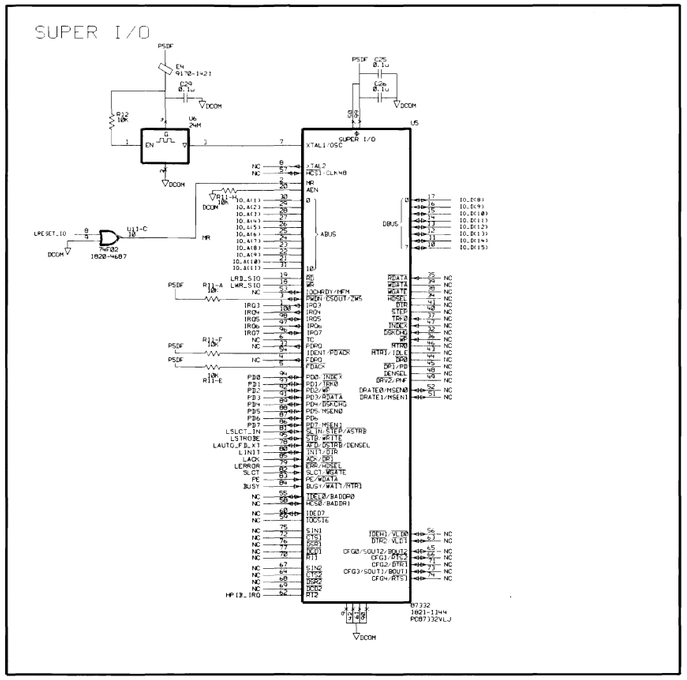

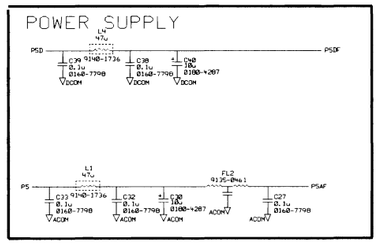

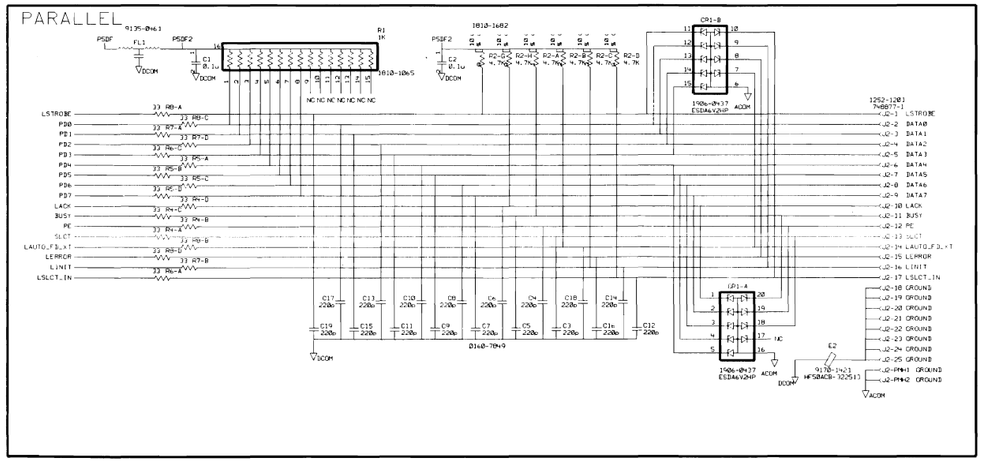

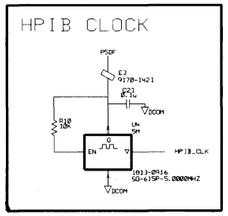

HP PROPRIETARY
THIS DOCUMENT CONTAINS CONFIDENTIAL, PROPRIETARY INFORMATION THAT IS HEWLETT-PACKARD (HP) PROPERTY. DO NOT DISCLOSE TO OR DUPLICATE FOR OTHERS EXCEPT AS AUTHORIZED BY HP.

LAST CHECKED	DATE	SCHEMATIC, FWA HPIB PARALLEL	HEWLETT PACKARD 5303
ENGINEER	SHEET 1 OF 1	1/13/E	E4401-60013
DRAWN BY	SIZE D	6:P:E4401/60013/DA3634/hpib sheet1	PART NUMBER
	DA3634 ASSY. REV	A3634 DWG. REV	1 2 PAGE OF	D-E4401-60013-1 DWG. NO.

REVISIONS
SEE PAGE 1 FOR REVISION HISTORY

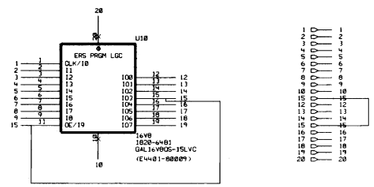

HP PROPRIETARY
THIS DOCUMENT CONTAINS CONFIDENTIAL, PROPRIETARY INFORMATION THAT IS HEWLETT-PACKARD (HP) PROPERTY. DO NOT DISCLOSE TO OR DUPLICATE FOR OTHERS EXCEPT AS AUTHORIZED BY HP.

LAST CHECKED	DATE	SCHEMATIC, PWA HP1B PARALLEL	HEWLETT PACKARD S300
ENGINEER	SHEET 1 OF 1	TITLE HP:E4401/60013/DA3634/io_address.sch.1	E4401-60013
DRAWN BY	SIZE D	PATHNAME sheet1	PART NUMBER
	DA3634 ASSY. REV	A3634 MFG. REV	2 OF 2 PAGE	D-E4401-60013-1 DWG. NO.

Component-Level Information Packet for E4401-60014

Serial/Parallel I/O (Option 1AX)

Agilent Technologies

Agilent Part Number: E4401-90026
Printed in Malaysia April 2001

Notice

The information contained in this document is subject to change without notice. Agilent Technologies makes no warranty of any kind with regard to this material, including but not limited to, the implied warranties of merchantability and fitness for a particular purpose. Agilent Technologies shall not be liable for errors contained herein or for incidental or consequential damages in connection with the furnishing, performance, or use of this material.

© Copyright Agilent Technologies Inc. 2000, 2001
All Rights Reserved. Reproduction, adaptation, or translation without prior written permission is prohibited, except as allowed under the copyright laws.

Agilent Part Number E4401-60014
Serial/Parallel I/O (Option 1AX)

Reference Designator	Agilent Part Number	Qty	Description	Mgr Code	Mfr Part Number
C1	0160-7798	1	CAP-FXD 0.1uF +-10% 50 V CER X7R	06352	C2012X7R1H104K
C2	0160-7849	1	CAP-FXD 220pF +-5% 50 V CER C0G	02010	06035A221JAT
C3	0160-7849	1	CAP-FXD 220pF +-5% 50 V CER C0G	02010	06035A221JAT
C4	0160-7849	1	CAP-FXD 220pF +-5% 50 V CER C0G	02010	06035A221JAT
C5	0160-7849	1	CAP-FXD 220pF +-5% 50 V CER C0G	02010	06035A221JAT
C6	0160-7849	1	CAP-FXD 220pF +-5% 50 V CER C0G	02010	06035A221JAT
C7	0160-7849	1	CAP-FXD 220pF +-5% 50 V CER C0G	02010	06035A221JAT
C8	0160-7849	1	CAP-FXD 220pF +-5% 50 V CER C0G	02010	06035A221JAT
C9	0160-7849	1	CAP-FXD 220pF +-5% 50 V CER C0G	02010	06035A221JAT
C10	0160-7849	1	CAP-FXD 220pF +-5% 50 V CER C0G	02010	06035A221JAT
C11	0160-7849	1	CAP-FXD 220pF +-5% 50 V CER C0G	02010	06035A221JAT
C12	0160-7849	1	CAP-FXD 220pF +-5% 50 V CER C0G	02010	06035A221JAT
C13	0160-7849	1	CAP-FXD 220pF +-5% 50 V CER C0G	02010	06035A221JAT
C14	0160-7849	1	CAP-FXD 220pF +-5% 50 V CER C0G	02010	06035A221JAT
C15	0160-7849	1	CAP-FXD 220pF +-5% 50 V CER C0G	02010	06035A221JAT
C16	0160-7849	1	CAP-FXD 220pF +-5% 50 V CER C0G	02010	06035A221JAT
C17	0160-7798	1	CAP-FXD 0.1uF +-10% 50 V CER X7R	06352	C2012X7R1H104K
C18	0160-7849	1	CAP-FXD 220pF +-5% 50 V CER C0G	02010	06035A221JAT
C19	0160-7849	1	CAP-FXD 220pF +-5% 50 V CER C0G	02010	06035A221JAT
C22	0160-7798	1	CAP-FXD 0.1uF +-10% 50 V CER X7R	06352	C2012X7R1H104K
C24	0160-7798	1	CAP-FXD 0.1uF +-10% 50 V CER X7R	06352	C2012X7R1H104K
C29	0160-7798	1	CAP-FXD 0.1uF +-10% 50 V CER X7R	06352	C2012X7R1H104K
C30	0160-7798	1	CAP-FXD 0.1uF +-10% 50 V CER X7R	06352	C2012X7R1H104K
C32	0160-7798	1	CAP-FXD 0.1uF +-10% 50 V CER X7R	06352	C2012X7R1H104K
C33	0160-7798	1	CAP-FXD 0.1uF +-10% 50 V CER X7R	06352	C2012X7R1H104K
C34	0160-7798	1	CAP-FXD 0.1uF +-10% 50 V CER X7R	06352	C2012X7R1H104K
C35	0160-7798	1	CAP-FXD 0.1uF +-10% 50 V CER X7R	06352	C2012X7R1H104K
C36	0160-7798	1	CAP-FXD 0.1uF +-10% 50 V CER X7R	06352	C2012X7R1H104K

**Indicates factory-selected value*

Agilent Part Number E4401-60014
Serial/Parallel I/O (Option 1AX)

Reference Designator	Agilent Part Number	Qty	Description	Mgr Code	Mfr Part Number
C37	0160-7798	1	CAP-FXD 0.1uF +-10% 50 V CER X7R	06352	C2012X7R1H104K
C38	0180-4287	1	CAP-FXD 10uF +-20% 35 V TA	02010	TAJD106M035
C39	0160-7516	1	CAP-FXD 330pF +-5% 50 V CER C0G	06352	C1608COG1H331J
C40	0160-7516	1	CAP-FXD 330pF +-5% 50 V CER C0G	06352	C1608COG1H331J
C41	0180-3749	1	CAP-FXD 0.22uF +-20% 35 V TA	00039	NRA224M35R8
C42	0180-3749	1	CAP-FXD 0.22uF +-20% 35 V TA	00039	NRA224M35R8
C43	0160-7798	1	CAP-FXD 0.1uF +-10% 50 V CER X7R	06352	C2012X7R1H104K
C44	0160-7798	1	CAP-FXD 0.1uF +-10% 50 V CER X7R	06352	C2012X7R1H104K
C45	0160-7516	1	CAP-FXD 330pF +-5% 50 V CER C0G	06352	C1608COG1H331J
C46	0180-4287	1	CAP-FXD 10uF +-20% 35 V TA	02010	TAJD106M035
C47	0160-7798	1	CAP-FXD 0.1uF +-10% 50 V CER X7R	06352	C2012X7R1H104K
C48	0160-7798	1	CAP-FXD 0.1uF +-10% 50 V CER X7R	06352	C2012X7R1H104K
C49	0160-7798	1	CAP-FXD 0.1uF +-10% 50 V CER X7R	06352	C2012X7R1H104K
CR1	1906-0437	1	DIODE-ARRAY 15V MS-013AC	02910	BZA100
E1	9170-1421	1	CORE-SHIELDING BEAD	06352	HF50ACB-322513
E2	9170-1421	1	CORE-SHIELDING BEAD	06352	HF50ACB-322513
FL1	9135-0461	1	FILTER-SUPPRESSION EMI; SMT; WORKING	09939	NFM61R10T102M 00-621
FL2	9135-0461	1	FILTER-SUPPRESSION EMI; SMT; WORKING	09939	NFM61R10T102M 00-621
J1	1252-5906	1	CONN-RECT MICRORBN 100-CKT 100-CONT	01380	2-557101-5
J2	1252-1201	1	CONN-RECT D-SUBMIN 25-CKT 25-CONT	11971	DM11323-D4
L1	9140-1736	1	INDUCTOR 47uH +20% -20% 7.3W-mmX7.3LG-mm	06353	E636CY-470M-P3
L2	9140-1736	1	INDUCTOR 47uH +20% -20% 7.3W-mmX7.3LG-mm	06353	E636CY-470M-P3
MP2	E4401-00057	1	PNL-DRESS PRL S	28480	E4401-00057
MP3	1251-2942	1	SCREW LOCK KIT-SUBMIN D CONN	02121	ST9422-36
MP4	1251-2942	1	SCREW LOCK KIT-SUBMIN D CONN	02121	ST9422-36
MP7	1251-2942	1	SCREW LOCK KIT-SUBMIN D CONN	02121	ST9422-36
MP8	1251-2942	1	SCREW LOCK KIT-SUBMIN D CONN	02121	ST9422-36
MP10	5040-6843	1	EXTRACTOR RING	28480	5040-6843

 **Indicates factory-selected value*

Agilent Part Number E4401-60014
Serial/Parallel I/O (Option 1AX)

Reference Designator	Agilent Part Number	Qty	Description	Mgr Code	Mfr Part Number
MP11	5000-9043	1	EXTR PIN .062 BD	28480	5000-9043
P4	1252-1994	1	CONN-RECT D-SUBMIN 9-CKT 9-CONT	11971	DM10123-D4
R1	1810-1581	1	NET-RES 4 33.0 OHM 8-PIN	00746	MNR34K5AWJ330
R2	1810-1065	1	NET-RES 15 1.0K OHM 16-PIN	05524	SOMC-16-01-102G
R3	1810-1581	1	NET-RES 4 33.0 OHM 8-PIN	00746	MNR34K5AWJ330
R4	1810-1581	1	NET-RES 4 33.0 OHM 8-PIN	00746	MNR34K5AWJ330
R5	1810-1581	1	NET-RES 4 33.0 OHM 8-PIN	00746	MNR34K5AWJ330
R6	1810-1682	1	NET-RES 8 4.7K OHM 10-PIN	00746	MNR35J5RJ472
R7	1810-1581	1	NET-RES 4 33.0 OHM 8-PIN	00746	MNR34K5AWJ330
R10	1810-1360	1	NET-RES 8 10.0K OHM 16-PIN	05524	SOMC-1603-103G
R11	1810-1581	1	NET-RES 4 33.0 OHM 8-PIN	00746	MNR34K5AWJ330
R12	1810-1360	1	NET-RES 8 10.0K OHM 16-PIN	05524	SOMC-1603-103G
R13	1810-1581	1	NET-RES 4 33.0 OHM 8-PIN	00746	MNR34K5AWJ330
R14	1810-1581	1	NET-RES 4 33.0 OHM 8-PIN	00746	MNR34K5AWJ330
R15	1810-1581	1	NET-RES 4 33.0 OHM 8-PIN	00746	MNR34K5AWJ330
R16	1810-1581	1	NET-RES 4 33.0 OHM 8-PIN	00746	MNR34K5AWJ330
R17	1810-1581	1	NET-RES 4 33.0 OHM 8-PIN	00746	MNR34K5AWJ330
R18	1810-1581	1	NET-RES 4 33.0 OHM 8-PIN	00746	MNR34K5AWJ330
R19	1810-1581	1	NET-RES 4 33.0 OHM 8-PIN	00746	MNR34K5AWJ330
R20	1810-1581	1	NET-RES 4 33.0 OHM 8-PIN	00746	MNR34K5AWJ330
R21	1810-1581	1	NET-RES 4 33.0 OHM 8-PIN	00746	MNR34K5AWJ330
U2	1820-5763	1	IC GATE TTL/F NOR TPL 3-INP	02910	74F27D
U4	1820-7796	1	IC DRVR BICMOS/ABT LINE OCTL	02910	74ABT244D
U5	1821-1144	1	IC-SUPER I/O; DUAL UARTs; IEEE 1284; IDE	03406	PC87332VLJ
U6	1813-0710	1	CLK-OSC-XTAL STD 24.0-MHZ 0.01%	12768	SG-615-24.000MC
U7	1821-0787	1	IC-INTERFACE XCVR CMOS RS-232C	10858	LT1137ACS
U10	E4401-80009	1	IO ADDRESS PAL	28480	E4401-80009

**Indicates factory-selected value*

5300 D-E4401-60014-2

SYM	REVISIONS		APPROVED	DATE
A	AS ISSUED PER LCN 47.	SAT		
B	LCN 53-E4401-87	/PO		
C	LCN 53-E4401-101	/RO		

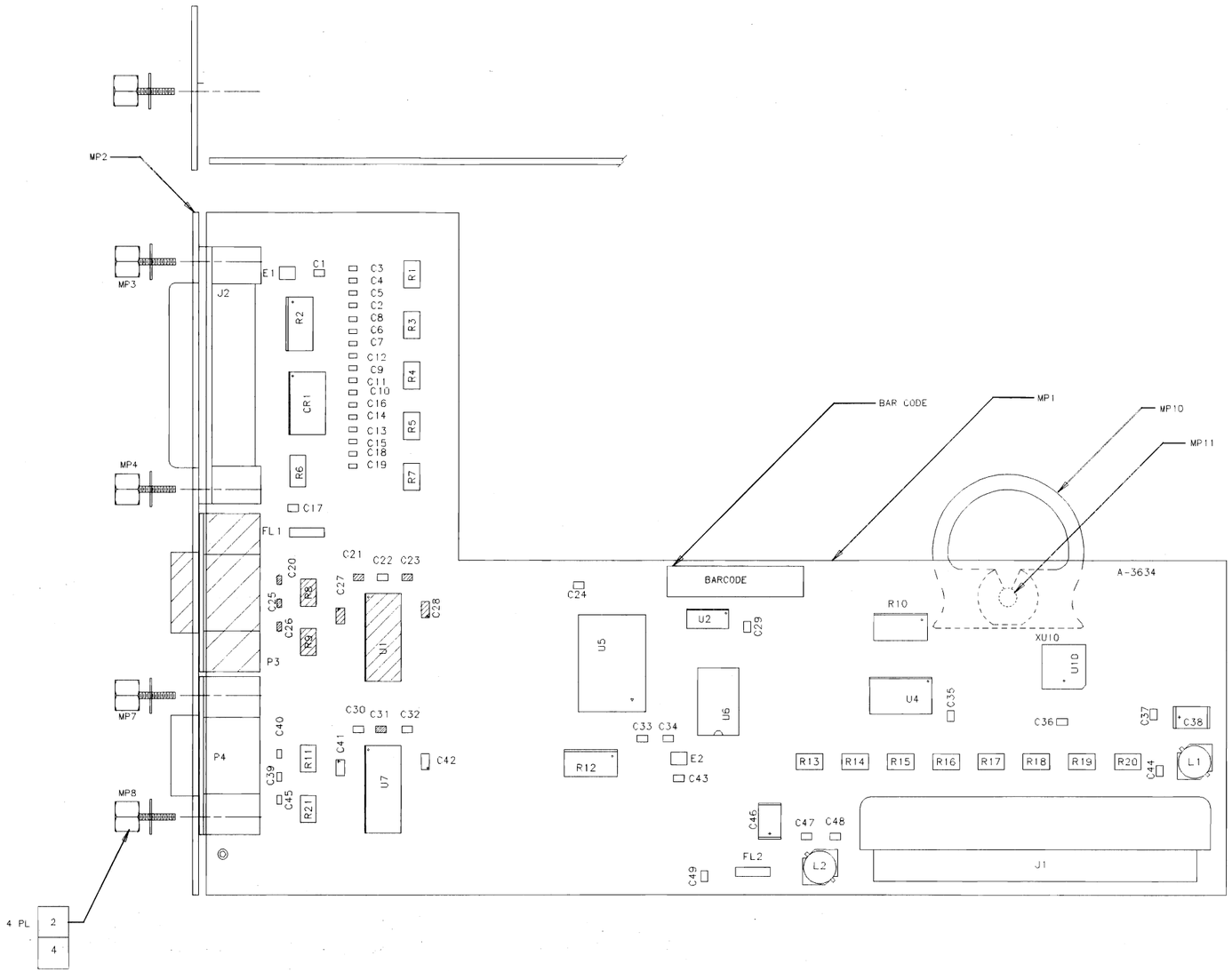

NOTES: UNLESS OTHERWISE SPECIFIED

1. USE RAW BOARD E4401-20014.

2 USE LOCK WASHER ONLY, DO NOT USE FLAT WASHER.

3. DO NOT LOAD CROSS-HATCHED COMPONENTS.

4 USE LOCKTITE 290 (HPPN 0470-0532) ON THREADS MP12

TORQUE MATRIX	
REF DES	TORQUE VALUE
MP3	6 IN-LBS
MP4	6 IN-LBS
MP7	6 IN-LBS
MP8	6 IN-LBS

TOP SIDE

SEE MATERIAL LIST E4401-60014

HP PROPRIETARY
THIS DOCUMENT CONTAINS CONFIDENTIAL, PROPRIETARY INFORMATION THAT IS HEWLETT-PACKARD (HP) PROPERTY. DO NOT DISCLOSE TO OR DUPLICATE FOR OTHERS EXCEPT AS AUTHORIZED BY HP.

UNLESS OTHERWISE SPECIFIED, DIMENSIONS ARE IN INCHES
TOLERANCES: XX.XXX .010 XX.XX .02
THIRD ANGLE PROJECTION
DO NOT SCALE THIS DRAWING

DRAWN BY	DATE	ASSEMBLY, PWB SERIAL/PARALLEL
ENGINEER/CHECKER	DATE	
RELEASE TO PROD.	DATE	
SUPERSEDES DWG.		TITLE

MENTOR FILENAME
SCALE NONE
SHEET 1 OF 1
HEWLETT PACKARD
E4401-60014 PART NUMBER
D-E4401-60014-2

D-E4401-60014-1

REV	INFORMATION	APPROVED	DATE
A	AS ISSUED PER LCN 47. SAT		
B	LCN 53-E4401-87		/RO
D	PER PCO 53-12612 IS		

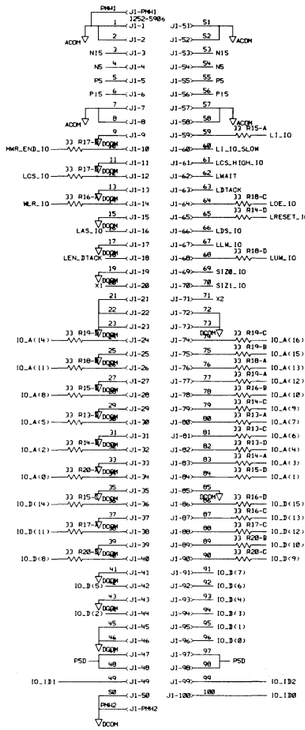

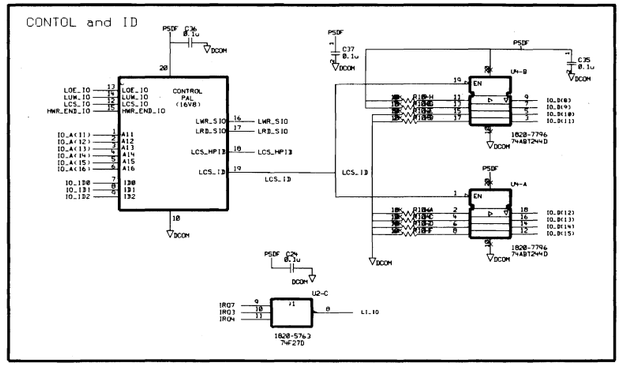

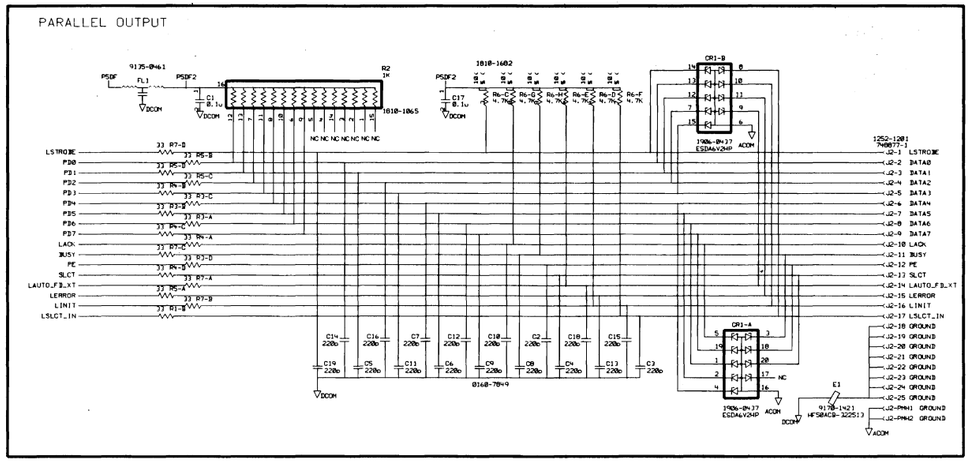

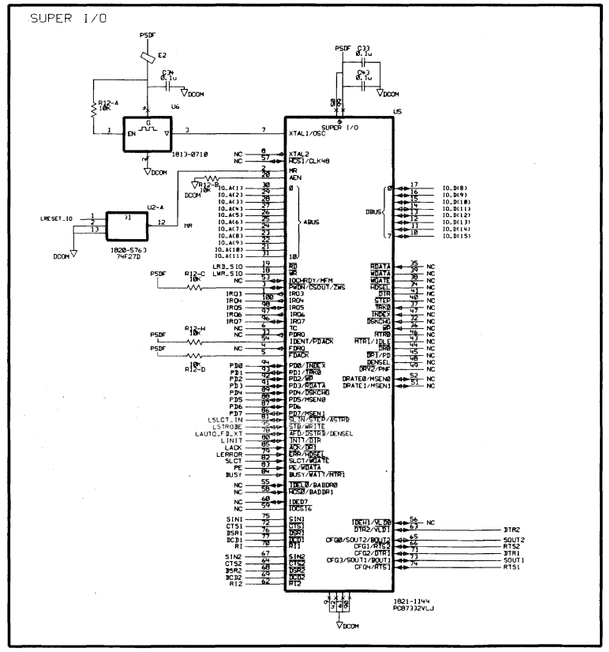

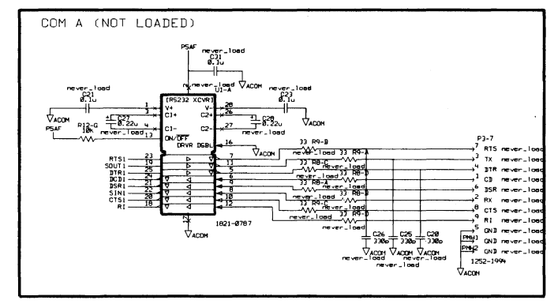

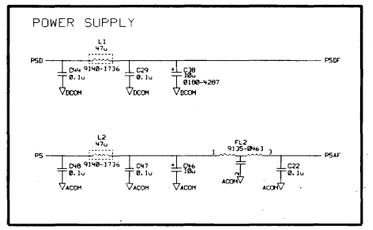

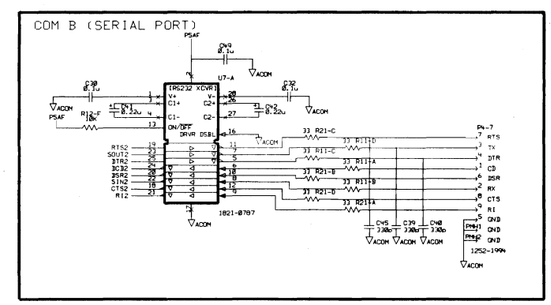

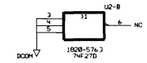

HP PROPRIETARY
THIS DOCUMENT CONTAINS CONFIDENTIAL. PROPRIETARY INFORMATION THAT IS HEWLETT-PACKARD (HP) PROPERTY. DO NOT DISCLOSE TO OR DUPLICATE FOR OTHERS EXCEPT AS AUTHORIZED BY HP.

LAST CHECKED	DATE	SCHEMATIC, PWA Serial Parallel	HEWLETT PACKARD 5300
ENGINEER	SHEET 1 OF 1	TITLE	E4401-60014
DRAWN BY	SIZE ?	#HP_E4401/60014/DA3634/serpar sheet1	PART NUMBER
	DA3634 ASSY. REV	A3634 BRD. REV	1 PAGE OF 2	D-E4401-60014-1 DWG. NO.

REVISIONS
SEE PAGE 1 FOR REVISION HISTORY

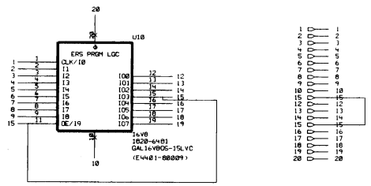

HP PROPRIETARY
THIS DOCUMENT CONTAINS CONFIDENTIAL, PROPRIETARY INFORMATION THAT IS HEWLETT-PACKARD (HP) PROPERTY. DO NOT DISCLOSE TO OR DUPLICATE FOR OTHERS EXCEPT AS AUTHORIZED BY HP.

LAST CHECKED	DATE	SCHEMATIC, PWA Serial	HEWLETT PACKARD 5100
ENGINEER	SHEET 1 OF 1	TITLE	
DRAWN BY	SIZE D	PATHNAME hp:E4401:60014/DA3634/io_address.pal.2 sheet1	E4401-60014 PART NUMBER
	DA3634 ASSY. REV.	A3634 BOM REV. / 2 PAGE / 2 OF	D-E4401-60014-1 DWG. NO.

Component-Level Information Packet for E4404-60001

Frequency Extension

Agilent Technologies

Agilent Part Number: E4404-90001
Printed in Malaysia April 2001

Notice

The information contained in this document is subject to change without notice. Agilent Technologies makes no warranty of any kind with regard to this material, including but not limited to, the implied warranties of merchantability and fitness for a particular purpose. Agilent Technologies shall not be liable for errors contained herein or for incidental or consequential damages in connection with the furnishing, performance, or use of this material.

© Copyright Agilent Technologies Inc. 2000, 2001
All Rights Reserved. Reproduction, adaptation, or translation without prior written permission is prohibited, except as allowed under the copyright laws.

Agilent Part Number E4404-60001
Frequency Extension

Reference Designator	Agilent Part Number	Qty	Description	Mgr Code	Mfr Part Number
C1	0180-4116	1	CAP-FXD 22uF +-20% 20 V TA	02010	TAJD226M020
C2	0180-4116	1	CAP-FXD 22uF +-20% 20 V TA	02010	TAJD226M020
C3	0180-4116	1	CAP-FXD 22uF +-20% 20 V TA	02010	TAJD226M020
C4	0180-4116	1	CAP-FXD 22uF +-20% 20 V TA	02010	TAJD226M020
C5	0180-3751	1	CAP-FXD 1uF +-20% 35 V TA	02010	TAJB105M035
C6	0180-3751	1	CAP-FXD 1uF +-20% 35 V TA	02010	TAJB105M035
C7	0180-3751	1	CAP-FXD 1uF +-20% 35 V TA	02010	TAJB105M035
C8	0180-3751	1	CAP-FXD 1uF +-20% 35 V TA	02010	TAJB105M035
C9	0180-3751	1	CAP-FXD 1uF +-20% 35 V TA	02010	TAJB105M035
C10	0180-3751	1	CAP-FXD 1uF +-20% 35 V TA	02010	TAJB105M035
C11	0180-3751	1	CAP-FXD 1uF +-20% 35 V TA	02010	TAJB105M035
C12	0180-3751	1	CAP-FXD 1uF +-20% 35 V TA	02010	TAJB105M035
C14	0160-7798	1	CAP-FXD 0.1uF +-10% 50 V CER X7R	06352	C2012X7R1H104K
C15	0160-7798	1	CAP-FXD 0.1uF +-10% 50 V CER X7R	06352	C2012X7R1H104K
C16	0160-7798	1	CAP-FXD 0.1uF +-10% 50 V CER X7R	06352	C2012X7R1H104K
C17	0160-7798	1	CAP-FXD 0.1uF +-10% 50 V CER X7R	06352	C2012X7R1H104K
C18	0160-7798	1	CAP-FXD 0.1uF +-10% 50 V CER X7R	06352	C2012X7R1H104K
C19	0160-7798	1	CAP-FXD 0.1uF +-10% 50 V CER X7R	06352	C2012X7R1H104K
C20	0160-7798	1	CAP-FXD 0.1uF +-10% 50 V CER X7R	06352	C2012X7R1H104K
C21	0160-7798	1	CAP-FXD 0.1uF +-10% 50 V CER X7R	06352	C2012X7R1H104K
C22	0160-7798	1	CAP-FXD 0.1uF +-10% 50 V CER X7R	06352	C2012X7R1H104K
C23	0160-7798	1	CAP-FXD 0.1uF +-10% 50 V CER X7R	06352	C2012X7R1H104K
C24	0160-7798	1	CAP-FXD 0.1uF +-10% 50 V CER X7R	06352	C2012X7R1H104K
C25	0180-4116	1	CAP-FXD 22uF +-20% 20 V TA	02010	TAJD226M020
C26	0180-3751	1	CAP-FXD 1uF +-20% 35 V TA	02010	TAJB105M035
C27	0180-3751	1	CAP-FXD 1uF +-20% 35 V TA	02010	TAJB105M035
C28	0180-4116	1	CAP-FXD 22uF +-20% 20 V TA	02010	TAJD226M020
C29	0180-3751	1	CAP-FXD 1uF +-20% 35 V TA	02010	TAJB105M035

Agilent Part Number E4404-60001
Frequency Extension

Reference Designator	Agilent Part Number	Qty	Description	Mgr Code	Mfr Part Number
C30	0180-3751	1	CAP-FXD 1uF +-20% 35 V TA	02010	TAJB105M035
C31	0160-7798	1	CAP-FXD 0.1uF +-10% 50 V CER X7R	06352	C2012X7R1H104K
C32	0160-7798	1	CAP-FXD 0.1uF +-10% 50 V CER X7R	06352	C2012X7R1H104K
C33	0160-7798	1	CAP-FXD 0.1uF +-10% 50 V CER X7R	06352	C2012X7R1H104K
C34	0160-7798	1	CAP-FXD 0.1uF +-10% 50 V CER X7R	06352	C2012X7R1H104K
C35	0160-7798	1	CAP-FXD 0.1uF +-10% 50 V CER X7R	06352	C2012X7R1H104K
C36	0160-7798	1	CAP-FXD 0.1uF +-10% 50 V CER X7R	06352	C2012X7R1H104K
C37	0160-7798	1	CAP-FXD 0.1uF +-10% 50 V CER X7R	06352	C2012X7R1H104K
C38	0160-7798	1	CAP-FXD 0.1uF +-10% 50 V CER X7R	06352	C2012X7R1H104K
C39	0160-7798	1	CAP-FXD 0.1uF +-10% 50 V CER X7R	06352	C2012X7R1H104K
C40	0160-7798	1	CAP-FXD 0.1uF +-10% 50 V CER X7R	06352	C2012X7R1H104K
C41	0160-7798	1	CAP-FXD 0.1uF +-10% 50 V CER X7R	06352	C2012X7R1H104K
C42	0160-7798	1	CAP-FXD 0.1uF +-10% 50 V CER X7R	06352	C2012X7R1H104K
C43	0180-3751	1	CAP-FXD 1uF +-20% 35 V TA	02010	TAJB105M035
C44	0160-7798	1	CAP-FXD 0.1uF +-10% 50 V CER X7R	06352	C2012X7R1H104K
C45	0180-3751	1	CAP-FXD 1uF +-20% 35 V TA	02010	TAJB105M035
C46	0160-7798	1	CAP-FXD 0.1uF +-10% 50 V CER X7R	06352	C2012X7R1H104K
C47	0160-7798	1	CAP-FXD 0.1uF +-10% 50 V CER X7R	06352	C2012X7R1H104K
C48	0160-7798	1	CAP-FXD 0.1uF +-10% 50 V CER X7R	06352	C2012X7R1H104K
C49	0160-7798	1	CAP-FXD 0.1uF +-10% 50 V CER X7R	06352	C2012X7R1H104K
C50	0160-7798	1	CAP-FXD 0.1uF +-10% 50 V CER X7R	06352	C2012X7R1H104K
C51	0160-7798	1	CAP-FXD 0.1uF +-10% 50 V CER X7R	06352	C2012X7R1H104K
C52	0180-3751	1	CAP-FXD 1uF +-20% 35 V TA	02010	TAJB105M035
C53	0180-3751	1	CAP-FXD 1uF +-20% 35 V TA	02010	TAJB105M035
C54	0160-7798	1	CAP-FXD 0.1uF +-10% 50 V CER X7R	06352	C2012X7R1H104K
C55	0160-7798	1	CAP-FXD 0.1uF +-10% 50 V CER X7R	06352	C2012X7R1H104K
C57	0180-3751	1	CAP-FXD 1uF +-20% 35 V TA	02010	TAJB105M035
C58	0180-3751	1	CAP-FXD 1uF +-20% 35 V TA	02010	TAJB105M035
C59	0160-7798	1	CAP-FXD 0.1uF +-10% 50 V CER X7R	06352	C2012X7R1H104K
C60	0160-7798	1	CAP-FXD 0.1uF +-10% 50 V CER X7R	06352	C2012X7R1H104K

 **Indicates factory-selected value*

Agilent Part Number E4404-60001
Frequency Extension

Reference Designator	Agilent Part Number	Qty	Description	Mgr Code	Mfr Part Number
C61	0160-7798	1	CAP-FXD 0.1uF +-10% 50 V CER X7R	06352	C2012X7R1H104K
C62	0160-7798	1	CAP-FXD 0.1uF +-10% 50 V CER X7R	06352	C2012X7R1H104K
C63	0160-7798	1	CAP-FXD 0.1uF +-10% 50 V CER X7R	06352	C2012X7R1H104K
C64	0160-7798	1	CAP-FXD 0.1uF +-10% 50 V CER X7R	06352	C2012X7R1H104K
C65	0160-7798	1	CAP-FXD 0.1uF +-10% 50 V CER X7R	06352	C2012X7R1H104K
C66	0160-7798	1	CAP-FXD 0.1uF +-10% 50 V CER X7R	06352	C2012X7R1H104K
C67	0160-7798	1	CAP-FXD 0.1uF +-10% 50 V CER X7R	06352	C2012X7R1H104K
C68	0160-7798	1	CAP-FXD 0.1uF +-10% 50 V CER X7R	06352	C2012X7R1H104K
C69	0160-7798	1	CAP-FXD 0.1uF +-10% 50 V CER X7R	06352	C2012X7R1H104K
C70	0160-7798	1	CAP-FXD 0.1uF +-10% 50 V CER X7R	06352	C2012X7R1H104K
C71	0160-7748	1	CAP-FXD 1000pF +-10% 50 V CER X7R	02010	06035C102KAT
C72	0160-7798	1	CAP-FXD 0.1uF +-10% 50 V CER X7R	06352	C2012X7R1H104K
C73	0160-7798	1	CAP-FXD 0.1uF +-10% 50 V CER X7R	06352	C2012X7R1H104K
C74	0160-7798	1	CAP-FXD 0.1uF +-10% 50 V CER X7R	06352	C2012X7R1H104K
C75	0160-7751	1	CAP-FXD 0.01uF +-10% 50 V CER X7R	02010	06035C103KAT
CR1	1906-0291	1	DIODE-DUAL 70V 100MA T0-236AA	02910	BAV99
J1	1252-5906	1	CONN-RECT MICRORBN 100-CKT 100-CONT	01380	2-557101-5
J2	1252-2588	1	CONN-POST TYPE .100-PIN-SPCG-MTG-END	04726	3440-5302
J3	1250-1842	1	CONNECTOR-RF BNC FEMALE PC-W-STDFS	05879	31-5506
L1	9140-1736	1	INDUCTOR 47uH +20% -20% 7.3W-mmX7.3LG-mm	06353	E636CY-470M-P3
L2	9140-1736	1	INDUCTOR 47uH +20% -20% 7.3W-mmX7.3LG-mm	06353	E636CY-470M-P3
L3	9140-1736	1	INDUCTOR 47uH +20% -20% 7.3W-mmX7.3LG-mm	06353	E636CY-470M-P3
L4	9140-1736	1	INDUCTOR 47uH +20% -20% 7.3W-mmX7.3LG-mm	06353	E636CY-470M-P3
L5	9140-1110	1	INDUCTOR 5.6uH +-5% 3.4W-mmX4.8LG-mm	28480	9140-1110
L6	9140-1110	1	INDUCTOR 5.6uH +-5% 3.4W-mmX4.8LG-mm	28480	9140-1110
L7	9140-1110	1	INDUCTOR 5.6uH +-5% 3.4W-mmX4.8LG-mm	28480	9140-1110
L8	9140-1110	1	INDUCTOR 5.6uH +-5% 3.4W-mmX4.8LG-mm	28480	9140-1110
L9	9140-1110	1	INDUCTOR 5.6uH +-5% 3.4W-mmX4.8LG-mm	28480	9140-1110
L10	9140-1110	1	INDUCTOR 5.6uH +-5% 3.4W-mmX4.8LG-mm	28480	9140-1110
L11	9140-1110	1	INDUCTOR 5.6uH +-5% 3.4W-mmX4.8LG-mm	28480	9140-1110

**Indicates factory-selected value*

Agilent Part Number E4404-60001
Frequency Extension

Reference Designator	Agilent Part Number	Qty	Description	Mgr Code	Mfr Part Number
L12	9140-1110	1	INDUCTOR 5.6uH +-5% 3.4W-mmX4.8LG-mm	28480	9140-1110
MP2	E4404-00005	1	PNL-REAR FRQ EXT	28480	E4404-00005
MP3	5040-6843	1	EXTRACTOR RING	28480	5040-6843
MP4	5000-9043	1	EXTR PIN .062 BD	28480	5000-9043
MP5	0515-1941	1	SCREW-MACHINE ASSEMBLY M2.5 X 0.45	05610	0515-1941
MP6	2950-0054	1	NUT-HEX-DBL-CHAM 1/2-28-THD .125-IN-THK	04567	2950-0054
Q1	1855-0800	1	TRANSISTOR MOSFET N-CHAN E-MODE TO-252AA	36633	MTD3055VL
Q2	1854-1037	1	TRANSISTOR NPN SI TO-236AA PD350MW	00746	SST3904T116
R1	1810-1940	1	NET-RES 4 220.0 OHM 8-PIN	00746	MNR34J221
R2	1810-1940	1	NET-RES 4 220.0 OHM 8-PIN	00746	MNR34J221
R3	0699-3918	1	RESISTOR 51.1 +-1% .063W TKF TC0+-200	00746	MCR03-F-51R1
R4	0699-3973	1	RESISTOR 13.3K +-1% .063W TKF TC0+-200	09891	RK73H1J1332F
R5	0699-3918	1	RESISTOR 51.1 +-1% .063W TKF TC0+-200	00746	MCR03-F-51R1
R6	0699-3967	1	RESISTOR 7.5K +-1% .063W TKF TC0+-200	09891	RK73H1J7501F
R7	0699-3964	1	RESISTOR 5.11K +-1% .063W TKF TC0+-200	09891	RK73H1J5111F
R8	0699-3964	1	RESISTOR 5.11K +-1% .063W TKF TC0+-200	09891	RK73H1J5111F
R9	0699-3964	1	RESISTOR 5.11K +-1% .063W TKF TC0+-200	09891	RK73H1J5111F
R10	0699-3964	1	RESISTOR 5.11K +-1% .063W TKF TC0+-200	09891	RK73H1J5111F
R11	0699-3964	1	RESISTOR 5.11K +-1% .063W TKF TC0+-200	09891	RK73H1J5111F
R12	0699-3947	1	RESISTOR 1K +-1% .063W TKF TC0+-200	00746	MCR03-F-1001
R13	0699-3908	1	RESISTOR 19.6 +-1% .063W TKF TC0+-200	09891	RK73H1J19R6F
R14	0699-3908	1	RESISTOR 19.6 +-1% .063W TKF TC0+-200	09891	RK73H1J19R6F
R15	0699-3970	1	RESISTOR 10K +-1% .063W TKF TC0+-200	09891	RK73H1J1002F
R16	0699-3948	1	RESISTOR 1.1K +-1% .063W TKF TC0+-200	00746	MCR03-F-1101
R17	0699-3947	1	RESISTOR 1K +-1% .063W TKF TC0+-200	00746	MCR03-F-1001
R18	0699-3908	1	RESISTOR 19.6 +-1% .063W TKF TC0+-200	09891	RK73H1J19R6F
R19	0699-3908	1	RESISTOR 19.6 +-1% .063W TKF TC0+-200	09891	RK73H1J19R6F
R20	0699-3970	1	RESISTOR 10K +-1% .063W TKF TC0+-200	09891	RK73H1J1002F

 **Indicates factory-selected value*

Agilent Part Number E4404-60001
Frequency Extension

Reference Designator	Agilent Part Number	Qty	Description	Mgr Code	Mfr Part Number
R21	0699-3948	1	RESISTOR 1.1K +-1% .063W TKF TC0+-200	00746	MCR03-F-1101
R22	0699-3964	1	RESISTOR 5.11K +-1% .063W TKF TC0+-200	09891	RK73H1J5111F
R23	0699-3964	1	RESISTOR 5.11K +-1% .063W TKF TC0+-200	09891	RK73H1J5111F
R24	0699-3964	1	RESISTOR 5.11K +-1% .063W TKF TC0+-200	09891	RK73H1J5111F
R25	0699-3964	1	RESISTOR 5.11K +-1% .063W TKF TC0+-200	09891	RK73H1J5111F
R26	0699-3964	1	RESISTOR 5.11K +-1% .063W TKF TC0+-200	09891	RK73H1J5111F
R27	0699-3964	1	RESISTOR 5.11K +-1% .063W TKF TC0+-200	09891	RK73H1J5111F
R28	0699-3964	1	RESISTOR 5.11K +-1% .063W TKF TC0+-200	09891	RK73H1J5111F
R29	0699-3964	1	RESISTOR 5.11K +-1% .063W TKF TC0+-200	09891	RK73H1J5111F
R30	0699-3908	1	RESISTOR 19.6 +-1% .063W TKF TC0+-200	09891	RK73H1J19R6F
R31	0699-3908	1	RESISTOR 19.6 +-1% .063W TKF TC0+-200	09891	RK73H1J19R6F
R32	0699-3908	1	RESISTOR 19.6 +-1% .063W TKF TC0+-200	09891	RK73H1J19R6F
R33	1810-1970	1	NET-RES 2 10.0K OHM 3-PIN MULTI-VAL	05524	MPM1001/1002B
R35	0699-3367	1	RESISTOR 5.62K +-1% .0625W TKF TC0+-200	00746	MCR03-F-5621
R36	0699-3365	1	RESISTOR 56.2 +-1% .065W TKF TC0+-200	09891	RK73H1J56R2F
R37	0699-3908	1	RESISTOR 19.6 +-1% .063W TKF TC0+-200	09891	RK73H1J19R6F
R38	0699-3908	1	RESISTOR 19.6 +-1% .063W TKF TC0+-200	09891	RK73H1J19R6F
R39	0699-2483	1	RESISTOR 4K +-0.1% .125W TF TC0+-25	02499	W1206R034001BT
R40	0699-2490	1	RESISTOR 1K +-0.1% .125W TF TC0+-25	01172	BLU-1206 1K .1% 25PPM
R41	0699-3908	1	RESISTOR 19.6 +-1% .063W TKF TC0+-200	09891	RK73H1J19R6F
R42	0699-3908	1	RESISTOR 19.6 +-1% .063W TKF TC0+-200	09891	RK73H1J19R6F
R43	0699-3954	1	RESISTOR 1.96K +-1% .063W TKF TC0+-200	09891	RK73H1J1961F
R44	0699-2839	1	RESISTOR 150K +-0.1% .125W TF TC0+-25	01172	BLU-1206 150K .1% 25PPM
R46	0699-2846	1	RESISTOR 5K +-0.1% .125W TF TC0+-25	02499	W1206R035001BT
R47	0699-3908	1	RESISTOR 19.6 +-1% .063W TKF TC0+-200	09891	RK73H1J19R6F
R48	0699-2846	1	RESISTOR 5K +-0.1% .125W TF TC0+-25	02499	W1206R035001BT
R49	0699-3908	1	RESISTOR 19.6 +-1% .063W TKF TC0+-200	09891	RK73H1J19R6F
R50	0699-3908	1	RESISTOR 19.6 +-1% .063W TKF TC0+-200	09891	RK73H1J19R6F

Agilent Part Number E4404-60001
Frequency Extension

Reference Designator	Agilent Part Number	Qty	Description	Mgr Code	Mfr Part Number
R51	0699-3908	1	RESISTOR 19.6 +-1% .063W TKF TC0+-200	09891	RK73H1J19R6F
R52	0699-3933	1	RESISTOR 237 +-1% .063W TKF TC0+-200	00746	MCR03-F-2370
R53	0699-3933	1	RESISTOR 237 +-1% .063W TKF TC0+-200	00746	MCR03-F-2370
R54	0699-3964	1	RESISTOR 5.11K +-1% .063W TKF TC0+-200	09891	RK73H1J5111F
R55	0699-3964	1	RESISTOR 5.11K +-1% .063W TKF TC0+-200	09891	RK73H1J5111F
R56	0699-3970	1	RESISTOR 10K +-1% .063W TKF TC0+-200	09891	RK73H1J1002F
R57	0699-3948	1	RESISTOR 1.1K +-1% .063W TKF TC0+-200	00746	MCR03-F-1101
R58	0699-3964	1	RESISTOR 5.11K +-1% .063W TKF TC0+-200	09891	RK73H1J5111F
R59	0699-3964	1	RESISTOR 5.11K +-1% .063W TKF TC0+-200	09891	RK73H1J5111F
R60	0699-3964	1	RESISTOR 5.11K +-1% .063W TKF TC0+-200	09891	RK73H1J5111F
R61	0699-3964	1	RESISTOR 5.11K +-1% .063W TKF TC0+-200	09891	RK73H1J5111F
R62	0699-3947	1	RESISTOR 1K +-1% .063W TKF TC0+-200	00746	MCR03-F-1001
R63	0699-3901	1	RESISTOR 10 +-1% .063W TKF TC0+-200	00746	MCR03-F-10R0
R64	0699-3901	1	RESISTOR 10 +-1% .063W TKF TC0+-200	00746	MCR03-F-10R0
R65	0699-3970	1	RESISTOR 10K +-1% .063W TKF TC0+-200	09891	RK73H1J1002F
R66	0699-3956	1	RESISTOR 2.37K +-1% .063W TKF TC0+-200	09891	RK73H1J2371F
R67	0699-3968	1	RESISTOR 8.25K +-1% .063W TKF TC0+-200	09891	RK73H1J8251F
R68	0699-3970	1	RESISTOR 10K +-1% .063W TKF TC0+-200	09891	RK73H1J1002F
R69	0699-3970	1	RESISTOR 10K +-1% .063W TKF TC0+-200	09891	RK73H1J1002F
R70	0699-3986	1	RESISTOR 46.4K +-1% .063W TKF TC0+-200	09891	RK73H1J4642F
R71	0699-3995	1	RESISTOR 121K +-1% .063W TKF TC0+-200	09891	RK73H1J1213F
R72	0699-3924	1	RESISTOR 100 +-1% .063W TKF TC0+-200	00746	MCR03-F-1000
R73	0699-3914	1	RESISTOR 34.8 +-1% .063W TKF TC0+-200	00746	MCR03-F-34R8
R99	0699-3964	1	RESISTOR 5.11K +-1% .063W TKF TC0+-200	09891	RK73H1J5111F
R100	0699-3908	1	RESISTOR 19.6 +-1% .063W TKF TC0+-200	09891	RK73H1J19R6F
TP1	1251-0600	1	CONNECTOR-SGL CONT PIN 1.14-MM-BSC-SZ SQ	03418	16-06-0034
TP2	1251-0600	1	CONNECTOR-SGL CONT PIN 1.14-MM-BSC-SZ SQ	03418	16-06-0034
TP3	1251-0600	1	CONNECTOR-SGL CONT PIN 1.14-MM-BSC-SZ SQ	03418	16-06-0034
TP4	1251-0600	1	CONNECTOR-SGL CONT PIN 1.14-MM-BSC-SZ SQ	03418	16-06-0034
TP5	1251-0600	1	CONNECTOR-SGL CONT PIN 1.14-MM-BSC-SZ SQ	03418	16-06-0034

 **Indicates factory-selected value*

Agilent Part Number E4404-60001
Frequency Extension

Reference Designator	Agilent Part Number	Qty	Description	Mgr Code	Mfr Part Number
TP6	1251-0600	1	CONNECTOR-SGL CONT PIN 1.14-MM-BSC-SZ SQ	03418	16-06-0034
TP7	1251-0600	1	CONNECTOR-SGL CONT PIN 1.14-MM-BSC-SZ SQ	03418	16-06-0034
TP8	1251-0600	1	CONNECTOR-SGL CONT PIN 1.14-MM-BSC-SZ SQ	03418	16-06-0034
U1	1826-1950	1	IC COMPARATOR HS SINGLE 8 PIN PLSTC-SOIC	10858	LT1016CS8
U2	1820-5938	1	IC GATE CMOS/ACT NAND QUAD 2-INP	01698	SN74ACT00D
U3	E4401-80011	1	PAL	28480	E4401-80011
U4	1820-5940	1	IC GATE CMOS/ACT AND QUAD 2-INP	02237	74ACT08SCX.
U5	E4404-80003	1	EPROM	28480	E4404-80003
U6	E4404-80006	1	PGMD HDR U6	28480	E4404-80006
U7	1820-6277	1	IC SHF-RGTR CMOS/HC SYNC/ASYNC SERIAL-IN	02237	MM74HC595M
U8	1820-6154	1	IC-PROGRAMMABLE INTERVAL TIMER	28480	1820-6154
U9	1820-5753	1	IC MUXR/DATA-SEL 4-TO-1-LINE 16-SOIC	02910	74HC253D
U10	1820-6277	1	IC SHF-RGTR CMOS/HC SYNC/ASYNC SERIAL-IN	02237	MM74HC595M
U11	1820-4692	1	IC GATE CMOS/HC NAND QUAD 2-INP	01698	SN74HC00D
U12	1826-1687	1	IC PWR MGT-V-REF-FXD 9.95/10.05V 8 PINS	10858	LT1021DCS8-10
U13	1826-1925	1	IC OP AMP LOW-NOISE SINGLE 8 PIN	03285	OP-27GS
U14	1826-1838	1	IC PWR MGT-V-REF-FXD 4.95/5.05V 8 PINS	10858	LT1021DCS8-5
U15	1826-1925	1	IC OP AMP LOW-NOISE SINGLE 8 PIN	03285	OP-27GS
U16	1820-6277	1	IC SHF-RGTR CMOS/HC SYNC/ASYNC SERIAL-IN	02237	MM74HC595M
U17	1820-6406	1	IC CNTR CMOS/HC BIN UP/DOWN SYNCHRO	02910	74HC191D
U18	1820-5754	1	IC MUXR/DATA-SEL 2-TO-1-LINE 16-SOIC	01698	74HC257D
U19	1820-6406	1	IC CNTR CMOS/HC BIN UP/DOWN SYNCHRO	02910	74HC191D
U20	1820-5754	1	IC MUXR/DATA-SEL 2-TO-1-LINE 16-SOIC	01698	74HC257D
U21	1820-6406	1	IC CNTR CMOS/HC BIN UP/DOWN SYNCHRO	02910	74HC191D
U22	1820-5754	1	IC MUXR/DATA-SEL 2-TO-1-LINE 16-SOIC	01698	74HC257D
U23	1820-6277	1	IC SHF-RGTR CMOS/HC SYNC/ASYNC SERIAL-IN	02237	MM74HC595M
U24	1820-6406	1	IC CNTR CMOS/HC BIN UP/DOWN SYNCHRO	02910	74HC191D
U25	1820-5754	1	IC MUXR/DATA-SEL 2-TO-1-LINE 16-SOIC	01698	74HC257D

**Indicates factory-selected value*

Agilent Part Number E4404-60001
Frequency Extension

Reference Designator	Agilent Part Number	Qty	Description	Mgr Code	Mfr Part Number
U26	1820-6277	1	IC SHF-RGTR CMOS/HC SYNC/ASYNC SERIAL-IN	02237	MM74HC595M
U27	1820-6277	1	IC SHF-RGTR CMOS/HC SYNC/ASYNC SERIAL-IN	02237	MM74HC595M
U28	1826-2395	1	D/A 16-BIT 28-PLCC CMOS	03285	AD7846JP
U29	1826-2722	1	D/A 12-BIT 16-P-SOIC CMOS	03285	AD7243AR
U30	1826-2981	1	IC OP AMP PRCN DUAL 8 PIN PLSTC-SOIC	10858	LT1124CS8
U31	1826-2145	1	ANALOG SWITCH 4 SPST 16 -P-SOIC	05524	DG413DY
U32	1826-2722	1	D/A 12-BIT 16-P-SOIC CMOS	03285	AD7243AR
U33	1826-2403	1	IC OP AMP LP DUAL 8 PIN PLSTC-SOIC	36633	MC33178DR2
U34	1826-2722	1	D/A 12-BIT 16-P-SOIC CMOS	03285	AD7243AR
U35	1820-6277	1	IC SHF-RGTR CMOS/HC SYNC/ASYNC SERIAL-IN	02237	MM74HC595M
U36	1826-1864	1	D/A 8-BIT 20-PLCC CMOS	03285	AD7524KP
U37	1820-6277	1	IC SHF-RGTR CMOS/HC SYNC/ASYNC SERIAL-IN	02237	MM74HC595M
U38	1820-6277	1	IC SHF-RGTR CMOS/HC SYNC/ASYNC SERIAL-IN	02237	MM74HC595M
U39	1826-2147	1	ANALOG MULTIPLEXER 8 CHNL 16 -P-SOIC	05524	DG408DY
U40	1826-1925	1	IC OP AMP LOW-NOISE SINGLE 8 PIN	03285	OP-27GS
U41	1818-5997	1	IC 16K-BIT EEPROM 500-NS CMOS	13492	CAT35C116S (UNPRGMD)
U42	1820-6406	1	IC CNTR CMOS/HC BIN UP/DOWN SYNCHRO	02910	74HC191D
U43	1826-2403	1	IC OP AMP LP DUAL 8 PIN PLSTC-SOIC	36633	MC33178DR2
VR1	1902-1541	1	DIODE-ZNR 3.3V 5% TO-236 (SOT-23)	02910	BZX84C3V3
VR2	1902-1541	1	DIODE-ZNR 3.3V 5% TO-236 (SOT-23)	02910	BZX84C3V3

 **Indicates factory-selected value*

5300

SYM	REVISIONS	APPROVED	DATE
A	AS ISSUED.LCN 53-E4404-291/RS	D. LUIZ/	11-20-98

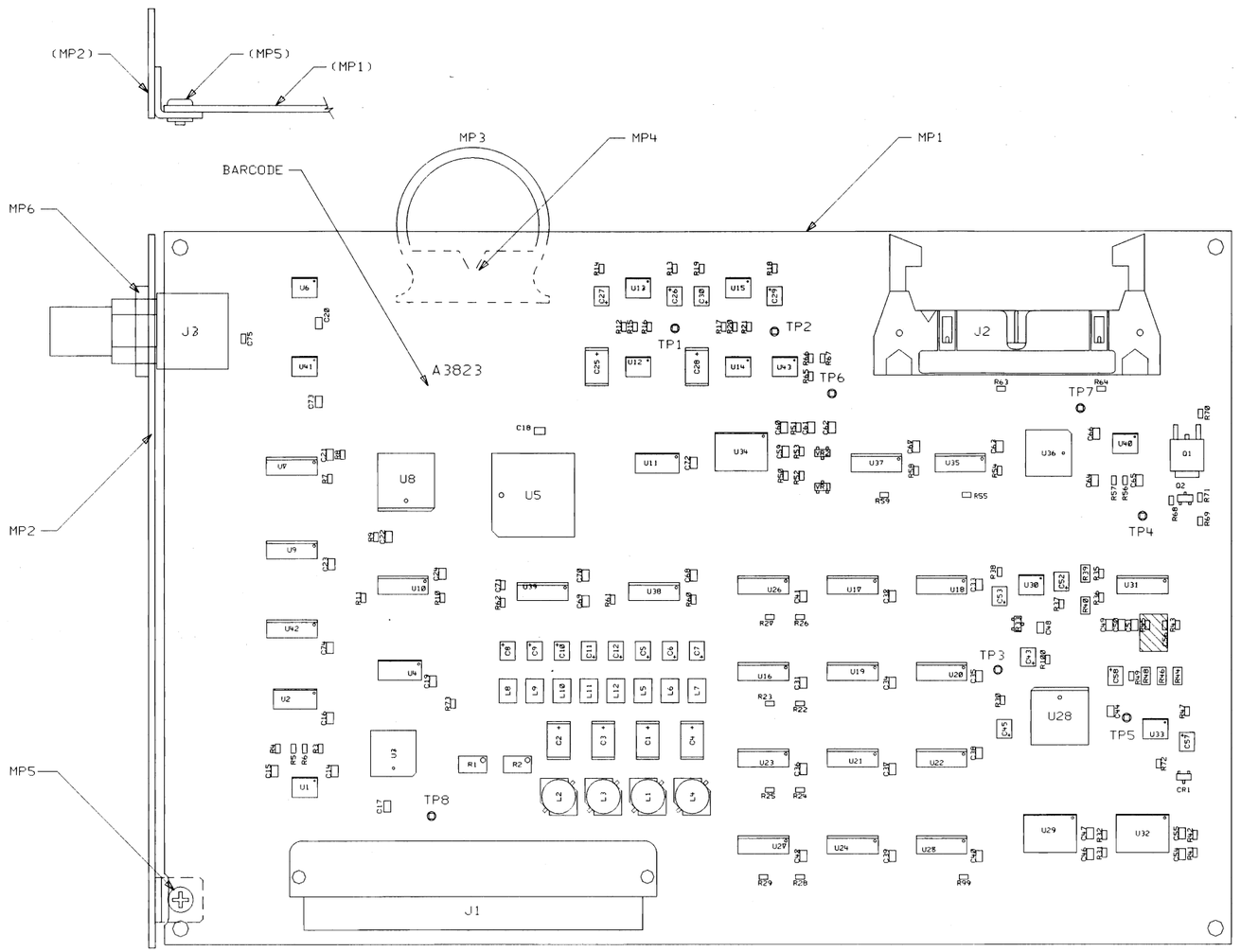

TORQUE MATRIX	
REF DES	TORQUE VALUE
MP5	5 IN-LBS
MP6	20 IN-LBS

NOTES: UNLESS OTHERWISE SPECIFIED

1. USE RAW BOARD PART NUMBER E4404-20001
2. HATCHED COMPONENTS ARE NOT LOADED FOR THIS ASSEMBLY.

TOP SIDE

SEE MATERIAL LIST E4404-60001

HP RESTRICTED
THIS DOCUMENT CONTAINS CONFIDENTIAL. PROPRIETARY INFORMATION THAT IS HEWLETT-PACKARD (HP) PROPERTY. DO NOT DISCLOSE TO OR DUPLICATE FOR OTHERS EXCEPT AS AUTHORIZED BY HP.

UNLESS OTHERWISE SPECIFIED. DIMENSIONS ARE IN INCHES.	LEN NORDEEN DRAWN BY	DATE	ASSEMBLY, PWB FREQUENCY EXTENSION
TOLERANCES: XX.XXX ±.010 XX.XX ±.02	DAVE LUIZ ENGINEER/CHECKER	DATE	
THIRD ANGLE PROJECTION	D. LUIZ RELEASE TO PROD.	11-20-98 DATE	
DO NOT SCALE THIS DRAWING	SUPERSEDES DWG.		TITLE

alaff001 FILENAME
SCALE NONE
SHEET 1 OF 1
E4404-60001 PART NUMBER
D-E4404-60001-2

HEWLETT PACKARD

5300 AA3823 B-E4404-60001-1

SYM	REVISIONS	APPROVED	DATE
A	AS ISSUED, LCN 53-E4404-291/RS		

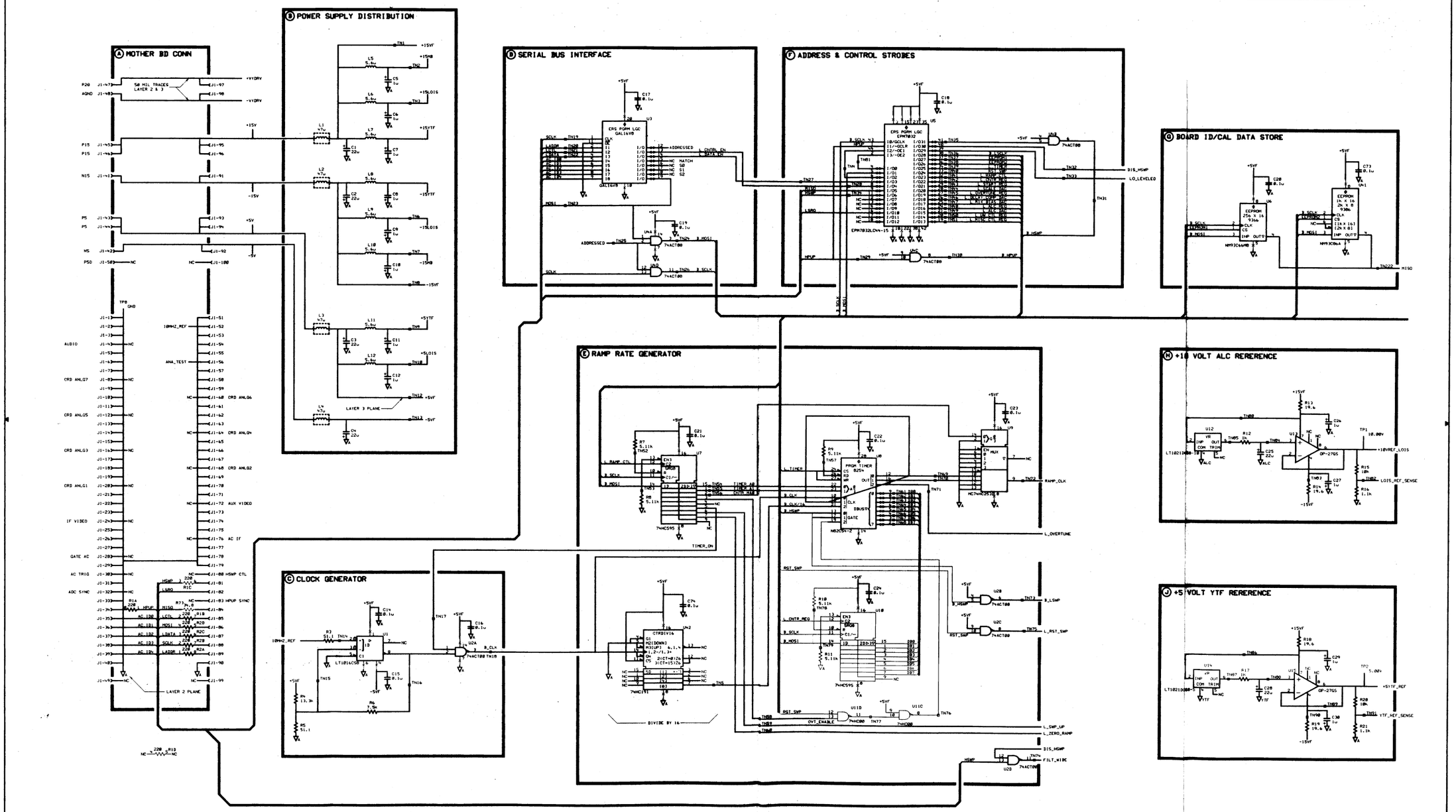

HP RESTRICTED
THIS DOCUMENT CONTAINS CONFIDENTIAL, PROPRIETARY INFORMATION THAT IS HEWLETT-PACKARD (HP) PROPERTY. DO NOT DISCLOSE TO OR DUPLICATE FOR OTHERS EXCEPT AS AUTHORIZED BY HP.

DRAWN BY	DATE	SCHEMATIC, PWA FREQUENCY EXTENSION
ENGINEER/CHECKER	DATE	
RELEASE TO PROD.	DATE	
SUPERSEDES DWG.		TITLE

slaff001 FILENAME
NONE SCALE
1 SHEET OF 3
E4404-60001 PART NUMBER
B-E4404-60001-1

HEWLETT PACKARD

IGNORE

FREQUENCY EXTENSION BOARD

5300	AA3823	D-E4404-60001-1

SYM	REVISIONS	APPROVED	DATE
A	AS ISSUED,LCN 53-E4404-291/RS		

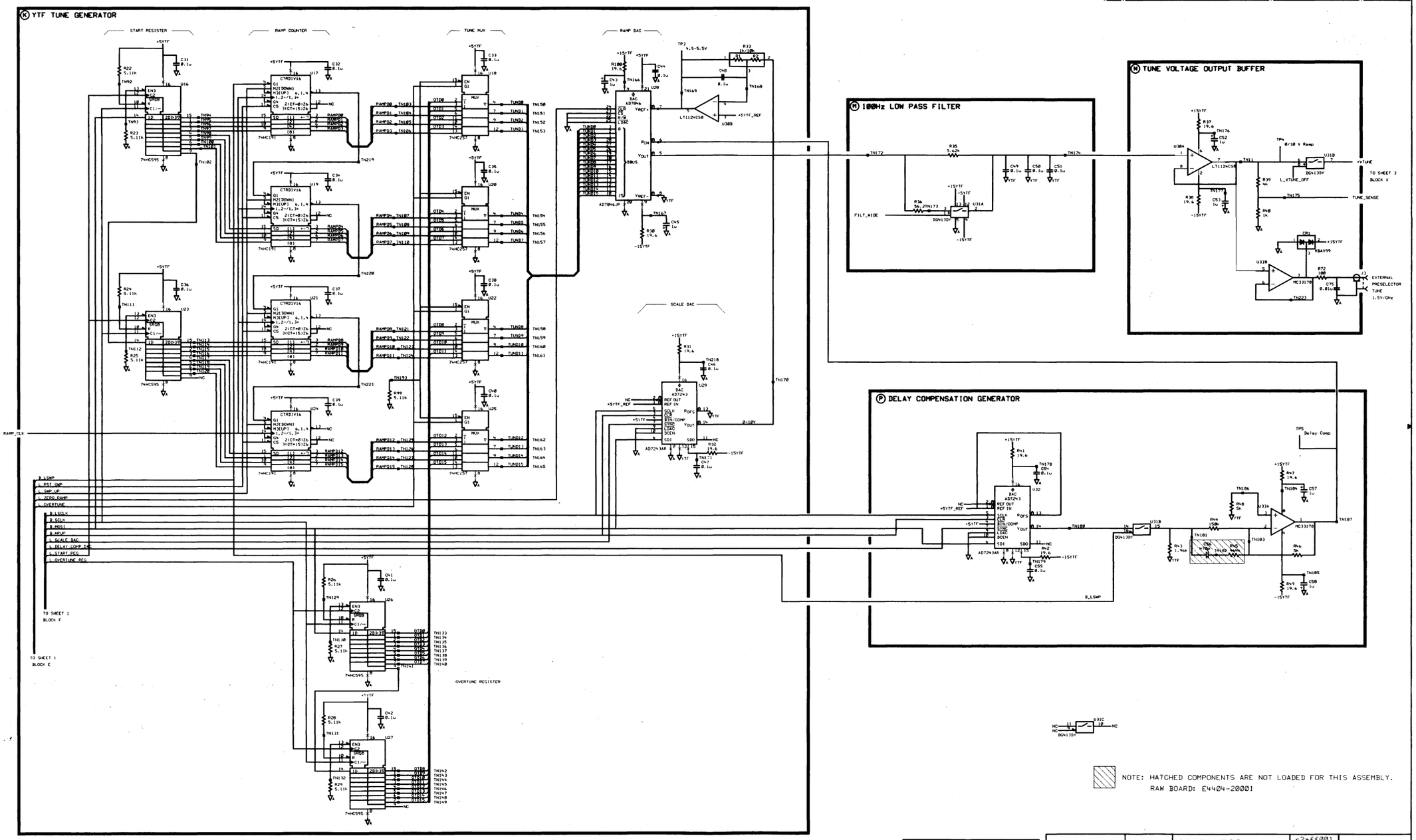

IGNORE

HP RESTRICTED
THIS DOCUMENT CONTAINS CONFIDENTIAL, PROPRIETARY INFORMATION THAT IS HEWLETT-PACKARD (HP) PROPERTY. DO NOT DISCLOSE TO OR DUPLICATE FOR OTHERS EXCEPT AS AUTHORIZED BY HP.

DRAWN BY	DATE	SCHEMATIC, PWA FREQUENCY EXTENSION
ENGINEER/CHECKER	DATE	
RELEASE TO PROD.	DATE	
SUPERSEDES DWG.		TITLE

FILENAME	s2aff001
SCALE	NONE
SHEET 2 OF 3	PART NUMBER E4404-60001
	D-E4404-60001-1

HEWLETT PACKARD

S300	BA3823	D-E4404-60001-1

SYM	REVISIONS	APPROVED	DATE

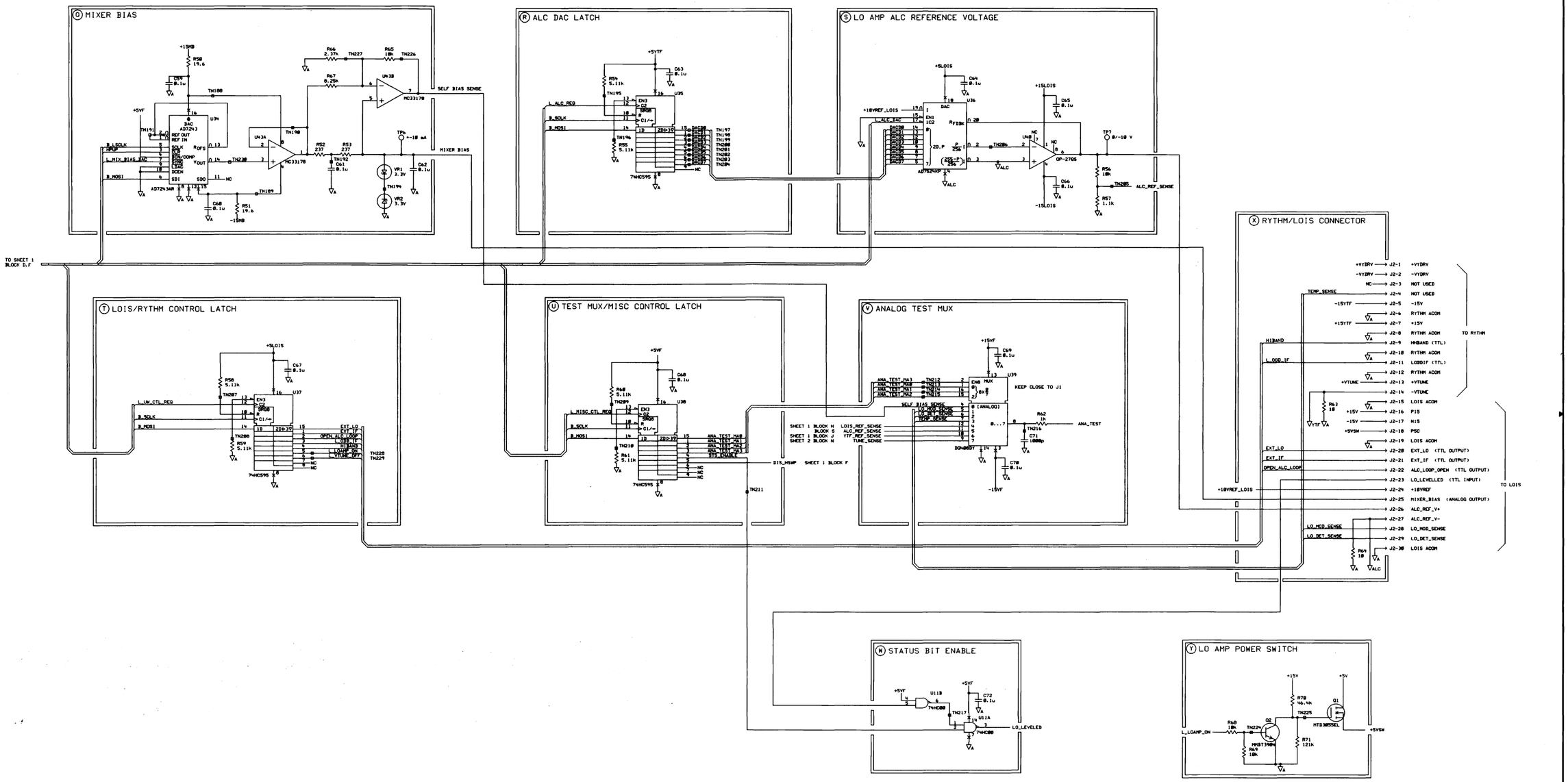

IGNORE

AGILENT TECHNOLOGIES RESTRICTED
THIS DOCUMENT CONTAINS CONFIDENTIAL, PROPRIETARY INFORMATION THAT IS AGILENT TECHNOLOGIES PROPERTY. DO NOT DISCLOSE TO OR DUPLICATE FOR OTHERS EXCEPT AS AUTHORIZED BY AGILENT TECHNOLOGIES.

DRAWN BY	DATE	SCHEMATIC, PWA FREQUENCY EXTENSION	s3aff001 FILENAME
ENGINEER/CHECKER	DATE		SCALE NONE
RELEASE TO PROD.	DATE		SHEET 3 OF 3 / E4404-60001 PART NUMBER
SUPERSEDES DWG.		TITLE	D-E4404-60001-1

Agilent

Component-Level Information Packet for E4401-60083

Fast ADC (Option AYX)

Agilent Technologies

Agilent Part Number: E4401-90123
Printed in Malaysia April 2001

Notice

The information contained in this document is subject to change without notice. Agilent Technologies makes no warranty of any kind with regard to this material, including but not limited to, the implied warranties of merchantability and fitness for a particular purpose. Agilent Technologies shall not be liable for errors contained herein or for incidental or consequential damages in connection with the furnishing, performance, or use of this material.

© Copyright Agilent Technologies Inc. 2000, 2001
All Rights Reserved. Reproduction, adaptation, or translation without prior written permission is prohibited, except as allowed under the copyright laws.

Agilent Part Number E4401-60083
Fast ADC (Option AYX)

Reference Designator	Agilent Part Number	Qty	Description	Mgr Code	Mfr Part Number
C2	0180-4287	1	CAP-FXD 10uF +-20% 35 V TA	02010	TAJD106M035
C3	0180-4287	1	CAP-FXD 10uF +-20% 35 V TA	02010	TAJD106M035
C4	0180-4287	1	CAP-FXD 10uF +-20% 35 V TA	02010	TAJD106M035
C5	0180-3755	1	CAP-FXD 33uF +-20% 10 V TA	02010	TAJD336M010
C6	0180-3755	1	CAP-FXD 33uF +-20% 10 V TA	02010	TAJD336M010
C7	0180-3755	1	CAP-FXD 33uF +-20% 10 V TA	02010	TAJD336M010
C8	0180-3755	1	CAP-FXD 33uF +-20% 10 V TA	02010	TAJD336M010
C9	0180-3755	1	CAP-FXD 33uF +-20% 10 V TA	02010	TAJD336M010
C10	0180-3755	1	CAP-FXD 33uF +-20% 10 V TA	02010	TAJD336M010
C11	0180-3755	1	CAP-FXD 33uF +-20% 10 V TA	02010	TAJD336M010
C12	0160-7988	1	CAP-FXD 470pF +-5% 50 V CER C0G	06352	C1608COG1H471J
C13	0160-7855	1	CAP-FXD 33pF +-5% 50 V CER C0G	02010	06035A330JAT
C14	0160-7845	1	CAP-FXD 180pF +-5% 50 V CER C0G	02010	06035A181JAT
C15	0160-7828	1	CAP-FXD 0.1uF +-10% 16 V CER X7R	02010	0603YC104KATA
C16	0160-7828	1	CAP-FXD 0.1uF +-10% 16 V CER X7R	02010	0603YC104KATA
C17	0160-7828	1	CAP-FXD 0.1uF +-10% 16 V CER X7R	02010	0603YC104KATA
C18	0160-7828	1	CAP-FXD 0.1uF +-10% 16 V CER X7R	02010	0603YC104KATA
C19	0160-7828	1	CAP-FXD 0.1uF +-10% 16 V CER X7R	02010	0603YC104KATA
C20	0160-7828	1	CAP-FXD 0.1uF +-10% 16 V CER X7R	02010	0603YC104KATA
C21	0160-7828	1	CAP-FXD 0.1uF +-10% 16 V CER X7R	02010	0603YC104KATA
C22	0160-7828	1	CAP-FXD 0.1uF +-10% 16 V CER X7R	02010	0603YC104KATA
C23	0160-7828	1	CAP-FXD 0.1uF +-10% 16 V CER X7R	02010	0603YC104KATA
C24	0160-7828	1	CAP-FXD 0.1uF +-10% 16 V CER X7R	02010	0603YC104KATA
C25	0160-7828	1	CAP-FXD 0.1uF +-10% 16 V CER X7R	02010	0603YC104KATA
C26	0160-7828	1	CAP-FXD 0.1uF +-10% 16 V CER X7R	02010	0603YC104KATA
C27	0160-7828	1	CAP-FXD 0.1uF +-10% 16 V CER X7R	02010	0603YC104KATA
C28	0160-7828	1	CAP-FXD 0.1uF +-10% 16 V CER X7R	02010	0603YC104KATA
C29	0160-7828	1	CAP-FXD 0.1uF +-10% 16 V CER X7R	02010	0603YC104KATA

Agilent Part Number E4401-60083
Fast ADC (Option AYX)

Reference Designator	Agilent Part Number	Qty	Description	Mgr Code	Mfr Part Number
C2	0180-4287	1	CAP-FXD 10uF +-20% 35 V TA	02010	TAJD106M035
C3	0180-4287	1	CAP-FXD 10uF +-20% 35 V TA	02010	TAJD106M035
C4	0180-4287	1	CAP-FXD 10uF +-20% 35 V TA	02010	TAJD106M035
C5	0180-3755	1	CAP-FXD 33uF +-20% 10 V TA	02010	TAJD336M010
C6	0180-3755	1	CAP-FXD 33uF +-20% 10 V TA	02010	TAJD336M010
C7	0180-3755	1	CAP-FXD 33uF +-20% 10 V TA	02010	TAJD336M010
C8	0180-3755	1	CAP-FXD 33uF +-20% 10 V TA	02010	TAJD336M010
C9	0180-3755	1	CAP-FXD 33uF +-20% 10 V TA	02010	TAJD336M010
C10	0180-3755	1	CAP-FXD 33uF +-20% 10 V TA	02010	TAJD336M010
C11	0180-3755	1	CAP-FXD 33uF +-20% 10 V TA	02010	TAJD336M010
C12	0160-7988	1	CAP-FXD 470pF +-5% 50 V CER C0G	06352	C1608COG1H471J
C13	0160-7855	1	CAP-FXD 33pF +-5% 50 V CER C0G	02010	06035A330JAT
C14	0160-7845	1	CAP-FXD 180pF +-5% 50 V CER C0G	02010	06035A181JAT
C15	0160-7828	1	CAP-FXD 0.1uF +-10% 16 V CER X7R	02010	0603YC104KATA
C16	0160-7828	1	CAP-FXD 0.1uF +-10% 16 V CER X7R	02010	0603YC104KATA
C17	0160-7828	1	CAP-FXD 0.1uF +-10% 16 V CER X7R	02010	0603YC104KATA
C18	0160-7828	1	CAP-FXD 0.1uF +-10% 16 V CER X7R	02010	0603YC104KATA
C19	0160-7828	1	CAP-FXD 0.1uF +-10% 16 V CER X7R	02010	0603YC104KATA
C20	0160-7828	1	CAP-FXD 0.1uF +-10% 16 V CER X7R	02010	0603YC104KATA
C21	0160-7828	1	CAP-FXD 0.1uF +-10% 16 V CER X7R	02010	0603YC104KATA
C22	0160-7828	1	CAP-FXD 0.1uF +-10% 16 V CER X7R	02010	0603YC104KATA
C23	0160-7828	1	CAP-FXD 0.1uF +-10% 16 V CER X7R	02010	0603YC104KATA
C24	0160-7828	1	CAP-FXD 0.1uF +-10% 16 V CER X7R	02010	0603YC104KATA
C25	0160-7828	1	CAP-FXD 0.1uF +-10% 16 V CER X7R	02010	0603YC104KATA
C26	0160-7828	1	CAP-FXD 0.1uF +-10% 16 V CER X7R	02010	0603YC104KATA
C27	0160-7828	1	CAP-FXD 0.1uF +-10% 16 V CER X7R	02010	0603YC104KATA
C28	0160-7828	1	CAP-FXD 0.1uF +-10% 16 V CER X7R	02010	0603YC104KATA
C29	0160-7828	1	CAP-FXD 0.1uF +-10% 16 V CER X7R	02010	0603YC104KATA

Agilent Part Number E4401-60083
Fast ADC (Option AYX)

Reference Designator	Agilent Part Number	Qty	Description	Mgr Code	Mfr Part Number
C60	0160-7798	1	CAP-FXD 0.1uF +-10% 50 V CER X7R	06352	C2012X7R1H104K
C61	0160-7798	1	CAP-FXD 0.1uF +-10% 50 V CER X7R	06352	C2012X7R1H104K
C62	0160-7798	1	CAP-FXD 0.1uF +-10% 50 V CER X7R	06352	C2012X7R1H104K
C63	0160-7798	1	CAP-FXD 0.1uF +-10% 50 V CER X7R	06352	C2012X7R1H104K
C64	0160-7798	1	CAP-FXD 0.1uF +-10% 50 V CER X7R	06352	C2012X7R1H104K
C65	0160-7798	1	CAP-FXD 0.1uF +-10% 50 V CER X7R	06352	C2012X7R1H104K
C66	0160-7798	1	CAP-FXD 0.1uF +-10% 50 V CER X7R	06352	C2012X7R1H104K
C67	0160-7798	1	CAP-FXD 0.1uF +-10% 50 V CER X7R	06352	C2012X7R1H104K
C68	0160-7798	1	CAP-FXD 0.1uF +-10% 50 V CER X7R	06352	C2012X7R1H104K
C69	0160-7798	1	CAP-FXD 0.1uF +-10% 50 V CER X7R	06352	C2012X7R1H104K
C70	0160-7798	1	CAP-FXD 0.1uF +-10% 50 V CER X7R	06352	C2012X7R1H104K
C71	0160-7798	1	CAP-FXD 0.1uF +-10% 50 V CER X7R	06352	C2012X7R1H104K
C72	0160-7798	1	CAP-FXD 0.1uF +-10% 50 V CER X7R	06352	C2012X7R1H104K
C73	0160-7798	1	CAP-FXD 0.1uF +-10% 50 V CER X7R	06352	C2012X7R1H104K
C74	0160-7798	1	CAP-FXD 0.1uF +-10% 50 V CER X7R	06352	C2012X7R1H104K
C75	0160-7798	1	CAP-FXD 0.1uF +-10% 50 V CER X7R	06352	C2012X7R1H104K
C76	0160-7798	1	CAP-FXD 0.1uF +-10% 50 V CER X7R	06352	C2012X7R1H104K
C77	0160-7798	1	CAP-FXD 0.1uF +-10% 50 V CER X7R	06352	C2012X7R1H104K
C78	0160-7798	1	CAP-FXD 0.1uF +-10% 50 V CER X7R	06352	C2012X7R1H104K
C79	0160-7798	1	CAP-FXD 0.1uF +-10% 50 V CER X7R	06352	C2012X7R1H104K
C80	0160-7798	1	CAP-FXD 0.1uF +-10% 50 V CER X7R	06352	C2012X7R1H104K
C81	0160-7798	1	CAP-FXD 0.1uF +-10% 50 V CER X7R	06352	C2012X7R1H104K
C82	0160-7798	1	CAP-FXD 0.1uF +-10% 50 V CER X7R	06352	C2012X7R1H104K
C83	0160-7798	1	CAP-FXD 0.1uF +-10% 50 V CER X7R	06352	C2012X7R1H104K
C84	0160-7798	1	CAP-FXD 0.1uF +-10% 50 V CER X7R	06352	C2012X7R1H104K
C85	0160-7798	1	CAP-FXD 0.1uF +-10% 50 V CER X7R	06352	C2012X7R1H104K
C86	0160-7798	1	CAP-FXD 0.1uF +-10% 50 V CER X7R	06352	C2012X7R1H104K
C87	0160-7798	1	CAP-FXD 0.1uF +-10% 50 V CER X7R	06352	C2012X7R1H104K
C88	0160-7798	1	CAP-FXD 0.1uF +-10% 50 V CER X7R	06352	C2012X7R1H104K
C89	0160-7798	1	CAP-FXD 0.1uF +-10% 50 V CER X7R	06352	C2012X7R1H104K

**Indicates factory-selected value*

Agilent Part Number E4401-60083
Fast ADC (Option AYX)

Reference Designator	Agilent Part Number	Qty	Description	Mgr Code	Mfr Part Number
C90	0160-7798	1	CAP-FXD 0.1uF +-10% 50 V CER X7R	06352	C2012X7R1H104K
C91	0160-7798	1	CAP-FXD 0.1uF +-10% 50 V CER X7R	06352	C2012X7R1H104K
C92	0160-7798	1	CAP-FXD 0.1uF +-10% 50 V CER X7R	06352	C2012X7R1H104K
C93	0160-7798	1	CAP-FXD 0.1uF +-10% 50 V CER X7R	06352	C2012X7R1H104K
C94	0160-7798	1	CAP-FXD 0.1uF +-10% 50 V CER X7R	06352	C2012X7R1H104K
C95	0160-7798	1	CAP-FXD 0.1uF +-10% 50 V CER X7R	06352	C2012X7R1H104K
C96	0160-7798	1	CAP-FXD 0.1uF +-10% 50 V CER X7R	06352	C2012X7R1H104K
C97	0160-7798	1	CAP-FXD 0.1uF +-10% 50 V CER X7R	06352	C2012X7R1H104K
C98	0160-7798	1	CAP-FXD 0.1uF +-10% 50 V CER X7R	06352	C2012X7R1H104K
C99	0160-7798	1	CAP-FXD 0.1uF +-10% 50 V CER X7R	06352	C2012X7R1H104K
C101	0160-7798	1	CAP-FXD 0.1uF +-10% 50 V CER X7R	06352	C2012X7R1H104K
C102	0160-7798	1	CAP-FXD 0.1uF +-10% 50 V CER X7R	06352	C2012X7R1H104K
C103	0160-7798	1	CAP-FXD 0.1uF +-10% 50 V CER X7R	06352	C2012X7R1H104K
C104	0160-7798	1	CAP-FXD 0.1uF +-10% 50 V CER X7R	06352	C2012X7R1H104K
C105	0160-7798	1	CAP-FXD 0.1uF +-10% 50 V CER X7R	06352	C2012X7R1H104K
C106	0160-7798	1	CAP-FXD 0.1uF +-10% 50 V CER X7R	06352	C2012X7R1H104K
C107	0160-7798	1	CAP-FXD 0.1uF +-10% 50 V CER X7R	06352	C2012X7R1H104K
C108	0160-7798	1	CAP-FXD 0.1uF +-10% 50 V CER X7R	06352	C2012X7R1H104K
C109	0160-7798	1	CAP-FXD 0.1uF +-10% 50 V CER X7R	06352	C2012X7R1H104K
C110	0160-7798	1	CAP-FXD 0.1uF +-10% 50 V CER X7R	06352	C2012X7R1H104K
C111	0160-7798	1	CAP-FXD 0.1uF +-10% 50 V CER X7R	06352	C2012X7R1H104K
C112	0160-7798	1	CAP-FXD 0.1uF +-10% 50 V CER X7R	06352	C2012X7R1H104K
C113	0160-7798	1	CAP-FXD 0.1uF +-10% 50 V CER X7R	06352	C2012X7R1H104K
C114	0160-7798	1	CAP-FXD 0.1uF +-10% 50 V CER X7R	06352	C2012X7R1H104K
C115	0160-7798	1	CAP-FXD 0.1uF +-10% 50 V CER X7R	06352	C2012X7R1H104K
C116	0160-7798	1	CAP-FXD 0.1uF +-10% 50 V CER X7R	06352	C2012X7R1H104K
C117	0160-7798	1	CAP-FXD 0.1uF +-10% 50 V CER X7R	06352	C2012X7R1H104K
C118	0160-7798	1	CAP-FXD 0.1uF +-10% 50 V CER X7R	06352	C2012X7R1H104K
C119	0160-7798	1	CAP-FXD 0.1uF +-10% 50 V CER X7R	06352	C2012X7R1H104K
C120	0160-7798	1	CAP-FXD 0.1uF +-10% 50 V CER X7R	06352	C2012X7R1H104K

 **Indicates factory-selected value*

Agilent Part Number E4401-60083
Fast ADC (Option AYX)

Reference Designator	Agilent Part Number	Qty	Description	Mgr Code	Mfr Part Number
C121	0160-7798	1	CAP-FXD 0.1uF +-10% 50 V CER X7R	06352	C2012X7R1H104K
C122	0160-7798	1	CAP-FXD 0.1uF +-10% 50 V CER X7R	06352	C2012X7R1H104K
C123	0160-7751	1	CAP-FXD 0.01uF +-10% 50 V CER X7R	02010	06035C103KAT
C124	0160-7751	1	CAP-FXD 0.01uF +-10% 50 V CER X7R	02010	06035C103KAT
C125	0160-7748	1	CAP-FXD 1000pF +-10% 50 V CER X7R	02010	06035C102KAT
C126	0160-7748	1	CAP-FXD 1000pF +-10% 50 V CER X7R	02010	06035C102KAT
C127	0160-7748	1	CAP-FXD 1000pF +-10% 50 V CER X7R	02010	06035C102KAT
C128	0160-7748	1	CAP-FXD 1000pF +-10% 50 V CER X7R	02010	06035C102KAT
C129	0160-7748	1	CAP-FXD 1000pF +-10% 50 V CER X7R	02010	06035C102KAT
C130	0160-7748	1	CAP-FXD 1000pF +-10% 50 V CER X7R	02010	06035C102KAT
C131	0160-7748	1	CAP-FXD 1000pF +-10% 50 V CER X7R	02010	06035C102KAT
C132	0160-7748	1	CAP-FXD 1000pF +-10% 50 V CER X7R	02010	06035C102KAT
C133	0160-5974	1	CAP-FXD 8.2pF +-6.1% 50 V CER C0G	02010	08051A8R2DATA
C134	0160-5974	1	CAP-FXD 8.2pF +-6.1% 50 V CER C0G	02010	08051A8R2DATA
C135	0160-7828	1	CAP-FXD 0.1uF +-10% 16 V CER X7R	02010	0603YC104KATA
CR1	1906-0291	1	DIODE-DUAL 70V 100MA T0-236AA	02910	BAV99
CR2	1906-0291	1	DIODE-DUAL 70V 100MA T0-236AA	02910	BAV99
CR3	1906-0291	1	DIODE-DUAL 70V 100MA T0-236AA	02910	BAV99
CR4	1906-0291	1	DIODE-DUAL 70V 100MA T0-236AA	02910	BAV99
CR5	1906-0291	1	DIODE-DUAL 70V 100MA T0-236AA	02910	BAV99
CR6	1900-0217	1	DIODE-SCHOTTKY SM SIG	01542	HSMS-2822
CR7	1900-0217	1	DIODE-SCHOTTKY SM SIG	01542	HSMS-2822
CR8	1900-0217	1	DIODE-SCHOTTKY SM SIG	01542	HSMS-2822
CR9	1900-0217	1	DIODE-SCHOTTKY SM SIG	01542	HSMS-2822
E21	9170-1584	1	CORE-SHIELDING BEAD	06352	MMZ2012Y102B
E22	9170-1584	1	CORE-SHIELDING BEAD	06352	MMZ2012Y102B
E23	9170-1584	1	CORE-SHIELDING BEAD	06352	MMZ2012Y102B
E24	9170-1584	1	CORE-SHIELDING BEAD	06352	MMZ2012Y102B
E25	9170-1584	1	CORE-SHIELDING BEAD	06352	MMZ2012Y102B
E26	9170-1584	1	CORE-SHIELDING BEAD	06352	MMZ2012Y102B

Agilent Part Number E4401-60083
Fast ADC (Option AYX)

Reference Designator	Agilent Part Number	Qty	Description	Mgr Code	Mfr Part Number
E27	9170-1584	1	CORE-SHIELDING BEAD	06352	MMZ2012Y102B
E28	9170-1584	1	CORE-SHIELDING BEAD	06352	MMZ2012Y102B
E29	9170-1584	1	CORE-SHIELDING BEAD	06352	MMZ2012Y102B
E30	9170-1584	1	CORE-SHIELDING BEAD	06352	MMZ2012Y102B
E31	9170-1584	1	CORE-SHIELDING BEAD	06352	MMZ2012Y102B
E32	9170-1584	1	CORE-SHIELDING BEAD	06352	MMZ2012Y102B
E33	9170-1584	1	CORE-SHIELDING BEAD	06352	MMZ2012Y102B
E34	9170-1584	1	CORE-SHIELDING BEAD	06352	MMZ2012Y102B
E35	9170-1584	1	CORE-SHIELDING BEAD	06352	MMZ2012Y102B
E36	9170-1584	1	CORE-SHIELDING BEAD	06352	MMZ2012Y102B
E37	9170-1584	1	CORE-SHIELDING BEAD	06352	MMZ2012Y102B
E38	7100-1507	1	SHIELD CIRCUIT BOARD COMPONENT SHIELDING	14185	54-CBSF-1.25X2.5X.5
E39	9170-1584	1	CORE-SHIELDING BEAD	06352	MMZ2012Y102B
E40	9170-1584	1	CORE-SHIELDING BEAD	06352	MMZ2012Y102B
E41	9170-1584	1	CORE-SHIELDING BEAD	06352	MMZ2012Y102B
E42	9170-1584	1	CORE-SHIELDING BEAD	06352	MMZ2012Y102B
J1	1252-5906	1	CONN-RECT MICRORBN 100-CKT 100-CONT	01380	2-557101-5
J2	1252-5906	1	CONN-RECT MICRORBN 100-CKT 100-CONT	01380	2-557101-5
J3	1250-1842	1	CONNECTOR-RF BNC FEMALE PC-W-STDFS	05879	31-5506
J4	1250-1842	1	CONNECTOR-RF BNC FEMALE PC-W-STDFS	05879	31-5506
J5	1250-1842	1	CONNECTOR-RF BNC FEMALE PC-W-STDFS	05879	31-5506
J6	1250-1842	1	CONNECTOR-RF BNC FEMALE PC-W-STDFS	05879	31-5506
J7	1250-1842	1	CONNECTOR-RF BNC FEMALE PC-W-STDFS	05879	31-5506
J10	1252-1325	1	CONN-POST TYPE .100-PIN-SPCG-MTG-END	04726	N2510-6002UB
L1	9140-1759	1	INDUCTOR 47uH +10% -10%	06352	NLC565050T-470K
L2	9140-1759	1	INDUCTOR 47uH +10% -10%	06352	NLC565050T-470K
L3	9140-1759	1	INDUCTOR 47uH +10% -10%	06352	NLC565050T-470K
L4	9140-1759	1	INDUCTOR 47uH +10% -10%	06352	NLC565050T-470K
L5	9140-1759	1	INDUCTOR 47uH +10% -10%	06352	NLC565050T-470K

 **Indicates factory-selected value*

Agilent Part Number E4401-60083
Fast ADC (Option AYX)

Reference Designator	Agilent Part Number	Qty	Description	Mgr Code	Mfr Part Number
L6	9140-1736	1	INDUCTOR 47uH +20% -20% 7.3W-mmX7.3LG-mm	06353	E636CY-470M-P3
L7	9140-1736	1	INDUCTOR 47uH +20% -20% 7.3W-mmX7.3LG-mm	06353	E636CY-470M-P3
L8	9140-1237	1	INDUCTOR 4.7uH +-5% 2.8W-mmX3.4LG-mm	06352	NL322522T-4R7J
L9	9140-1110	1	INDUCTOR 5.6uH +-5% 3.4W-mmX4.8LG-mm	28480	9140-1110
L10	9140-1110	1	INDUCTOR 5.6uH +-5% 3.4W-mmX4.8LG-mm	28480	9140-1110
MAE38	7100-1508	1	SHIELD CIRCUIT BOARD COMPONENT SHIELDING	14185	50X-CBS-1.25X2.5X-.5
MAJ3	2950-0054	1	NUT-HEX-DBL-CHAM 1/2-28-THD .125-IN-THK	04567	2950-0054
MAJ4	2950-0054	1	NUT-HEX-DBL-CHAM 1/2-28-THD .125-IN-THK	04567	2950-0054
MAJ5	2950-0054	1	NUT-HEX-DBL-CHAM 1/2-28-THD .125-IN-THK	04567	2950-0054
MAJ6	2950-0054	1	NUT-HEX-DBL-CHAM 1/2-28-THD .125-IN-THK	04567	2950-0054
MAJ7	2950-0054	1	NUT-HEX-DBL-CHAM 1/2-28-THD .125-IN-THK	04567	2950-0054
MP3	7100-1316	1	CAN-SQ	01932	HU4280-.437+TABS
MP4	7100-1316	1	CAN-SQ	01932	HU4280-.437+TABS
MP12	5040-6843	1	EXTRACTOR RING	28480	5040-6843
MP13	5000-9043	1	EXTR PIN .062 BD	28480	5000-9043
MP14	E4401-00058	1	PNL-DRESS STD10	28480	E4401-00058
MP15	0515-1941	1	SCREW-MACHINE ASSEMBLY M2.5 X 0.45	05610	0515-1941
Q3	1855-0800	1	TRANSISTOR MOSFET N-CHAN E-MODE TO-252AA	36633	MTD3055VL
Q8	1854-1037	1	TRANSISTOR NPN SI TO-236AA PD350MW	00746	SST3904T116
Q9	1854-1037	1	TRANSISTOR NPN SI TO-236AA PD350MW	00746	SST3904T116
R1	1810-1581	1	NET-RES 4 33.0 OHM 8-PIN	00746	MNR34K5AWJ330
R2	1810-1581	1	NET-RES 4 33.0 OHM 8-PIN	00746	MNR34K5AWJ330
R3	1810-1581	1	NET-RES 4 33.0 OHM 8-PIN	00746	MNR34K5AWJ330
R4	1810-1682	1	NET-RES 8 4.7K OHM 10-PIN	00746	MNR35J5RJ472
R10	1810-1940	1	NET-RES 4 220.0 OHM 8-PIN	00746	MNR34J221
R11	1810-1940	1	NET-RES 4 220.0 OHM 8-PIN	00746	MNR34J221
R12	0699-3914	1	RESISTOR 34.8 +-1% .063W TKF TC0+-200	00746	MCR03-F-34R8

Agilent Part Number E4401-60083
Fast ADC (Option AYX)

Reference Designator	Agilent Part Number	Qty	Description	Mgr Code	Mfr Part Number
R20	1810-1581	1	NET-RES 4 33.0 OHM 8-PIN	00746	MNR34K5AWJ330
R21	1810-1581	1	NET-RES 4 33.0 OHM 8-PIN	00746	MNR34K5AWJ330
R22	1810-1581	1	NET-RES 4 33.0 OHM 8-PIN	00746	MNR34K5AWJ330
R23	1810-1581	1	NET-RES 4 33.0 OHM 8-PIN	00746	MNR34K5AWJ330
R24	1810-1581	1	NET-RES 4 33.0 OHM 8-PIN	00746	MNR34K5AWJ330
R25	1810-1581	1	NET-RES 4 33.0 OHM 8-PIN	00746	MNR34K5AWJ330
R26	1810-1581	1	NET-RES 4 33.0 OHM 8-PIN	00746	MNR34K5AWJ330
R27	1810-1581	1	NET-RES 4 33.0 OHM 8-PIN	00746	MNR34K5AWJ330
R28	1810-1581	1	NET-RES 4 33.0 OHM 8-PIN	00746	MNR34K5AWJ330
R29	1810-1578	1	NET-RES 4 1.0K OHM 8-PIN	00746	MNR34K5ABJ102
R30	1810-1578	1	NET-RES 4 1.0K OHM 8-PIN	00746	MNR34K5ABJ102
R32	0699-4016	1	RESISTOR 1M +-1% .063W TKF TC0+-200	00746	MCR03-F-1004
R34	0699-3995	1	RESISTOR 121K +-1% .063W TKF TC0+-200	09891	RK73H1J1213F
R35	0699-3993	1	RESISTOR 100K +-1% .063W TKF TC0+-200	09891	RK73H1J1003F
R37	0699-3986	1	RESISTOR 46.4K +-1% .063W TKF TC0+-200	09891	RK73H1J4642F
R38	0699-3978	1	RESISTOR 21.5K +-1% .063W TKF TC0+-200	09891	RK73H1J2152F
R39	0699-3978	1	RESISTOR 21.5K +-1% .063W TKF TC0+-200	09891	RK73H1J2152F
R40	0699-3973	1	RESISTOR 13.3K +-1% .063W TKF TC0+-200	09891	RK73H1J1332F
R41	0699-2489	1	RESISTOR 10K +-0.1% .125W TF TC0+-25	01172	BLU-1206 10K .1% 25PPM
R42	0699-3970	1	RESISTOR 10K +-1% .063W TKF TC0+-200	09891	RK73H1J1002F
R43	0699-2489	1	RESISTOR 10K +-0.1% .125W TF TC0+-25	01172	BLU-1206 10K .1% 25PPM
R44	0699-3970	1	RESISTOR 10K +-1% .063W TKF TC0+-200	09891	RK73H1J1002F
R45	0699-3970	1	RESISTOR 10K +-1% .063W TKF TC0+-200	09891	RK73H1J1002F
R46	0699-3970	1	RESISTOR 10K +-1% .063W TKF TC0+-200	09891	RK73H1J1002F
R47	0699-3967	1	RESISTOR 7.5K +-1% .063W TKF TC0+-200	09891	RK73H1J7501F
R48	0699-3947	1	RESISTOR 1K +-1% .063W TKF TC0+-200	00746	MCR03-F-1001
R49	0699-3947	1	RESISTOR 1K +-1% .063W TKF TC0+-200	00746	MCR03-F-1001
R50	0699-3947	1	RESISTOR 1K +-1% .063W TKF TC0+-200	00746	MCR03-F-1001

 **Indicates factory-selected value*

Agilent Part Number E4401-60083
Fast ADC (Option AYX)

Reference Designator	Agilent Part Number	Qty	Description	Mgr Code	Mfr Part Number
R51	0699-3947	1	RESISTOR 1K +-1% .063W TKF TC0+-200	00746	MCR03-F-1001
R54	0699-3947	1	RESISTOR 1K +-1% .063W TKF TC0+-200	00746	MCR03-F-1001
R55	0699-3946	1	RESISTOR 909 +-1% .063W TKF TC0+-200	00746	MCR03-F-9090
R56	0699-3937	1	RESISTOR 348 +-1% .063W TKF TC0+-200	00746	MCR03-F-3480
R57	0699-3932	1	RESISTOR 215 +-1% .063W TKF TC0+-200	00746	MCR03-F-2150
R58	0699-3924	1	RESISTOR 100 +-1% .063W TKF TC0+-200	00746	MCR03-F-1000
R59	0699-3918	1	RESISTOR 51.1 +-1% .063W TKF TC0+-200	00746	MCR03-F-51R1
R60	0699-3918	1	RESISTOR 51.1 +-1% .063W TKF TC0+-200	00746	MCR03-F-51R1
R61	0699-3918	1	RESISTOR 51.1 +-1% .063W TKF TC0+-200	00746	MCR03-F-51R1
R62	0699-1361	1	RESISTOR 51.1 +-1% .125W TKF TC0+-100	05524	CRCW120651R1F
R63	0699-3917	1	RESISTOR 46.4 +-1% .063W TKF TC0+-200	09891	RK73H1J46R4F
R64	0699-3917	1	RESISTOR 46.4 +-1% .063W TKF TC0+-200	09891	RK73H1J46R4F
R65	0699-2847	1	RESISTOR 2K +-0.1% .125W TF TC0+-25	01172	BLU-1206 2K .1% 25PPM
R66	0699-2847	1	RESISTOR 2K +-0.1% .125W TF TC0+-25	01172	BLU-1206 2K .1% 25PPM
R68	0699-2833	1	RESISTOR 300 +-0.1% .125W TF TC0+-25	01172	BLU-1206 300R .1% 25PPM
R69	0699-2833	1	RESISTOR 300 +-0.1% .125W TF TC0+-25	01172	BLU-1206 300R .1% 25PPM
R70	0699-2488	1	RESISTOR 100 +-0.1% .125W TF TC0+-25	09891	RN73E2BTE1000B
R71	0699-2490	1	RESISTOR 1K +-0.1% .125W TF TC0+-25	01172	BLU-1206 1K .1% 25PPM
R72	0699-2490	1	RESISTOR 1K +-0.1% .125W TF TC0+-25	01172	BLU-1206 1K .1% 25PPM
R73	0699-2489	1	RESISTOR 10K +-0.1% .125W TF TC0+-25	01172	BLU-1206 10K .1% 25PPM
R74	0699-2490	1	RESISTOR 1K +-0.1% .125W TF TC0+-25	01172	BLU-1206 1K .1% 25PPM
R75	0699-1430	1	RESISTOR 422 +-1% .125W TKF TC0+-100	05524	CRCW12064220F
R76	0699-1430	1	RESISTOR 422 +-1% .125W TKF TC0+-100	05524	CRCW12064220F
R77	0699-1428	1	RESISTOR 348 +-1% .125W TKF TC0+-100	05524	CRCW12063480F
R78	0699-1428	1	RESISTOR 348 +-1% .125W TKF TC0+-100	05524	CRCW12063480F

Agilent Part Number E4401-60083
Fast ADC (Option AYX)

Reference Designator	Agilent Part Number	Qty	Description	Mgr Code	Mfr Part Number
R79	0699-1428	1	RESISTOR 348 +-1% .125W TKF TC0+-100	05524	CRCW12063480F
R80	0699-1428	1	RESISTOR 348 +-1% .125W TKF TC0+-100	05524	CRCW12063480F
R81	0699-1423	1	RESISTOR 215 +-1% .125W TKF TC0+-100	05524	CRCW12062150F
R82	0699-1423	1	RESISTOR 215 +-1% .125W TKF TC0+-100	05524	CRCW12062150F
R83	0699-1363	1	RESISTOR 61.9 +-1% .125W TKF TC0+-100	05524	CRCW120661R9F
R90	1810-1581	1	NET-RES 4 33.0 OHM 8-PIN	00746	MNR34K5AWJ330
R91	0699-2490	1	RESISTOR 1K +-0.1% .125W TF TC0+-25	01172	BLU-1206 1K .1% 25PPM
R92	0699-3970	1	RESISTOR 10K +-1% .063W TKF TC0+-200	09891	RK73H1J1002F
R93	0699-3928	1	RESISTOR 147 +-1% .063W TKF TC0+-200	00746	MCR03-F-1470
R94	0699-3924	1	RESISTOR 100 +-1% .063W TKF TC0+-200	00746	MCR03-F-1000
R95	0699-3924	1	RESISTOR 100 +-1% .063W TKF TC0+-200	00746	MCR03-F-1000
R96	0699-3924	1	RESISTOR 100 +-1% .063W TKF TC0+-200	00746	MCR03-F-1000
R97	1810-1581	1	NET-RES 4 33.0 OHM 8-PIN	00746	MNR34K5AWJ330
R98	0699-3914	1	RESISTOR 34.8 +-1% .063W TKF TC0+-200	00746	MCR03-F-34R8
R99	0699-3914	1	RESISTOR 34.8 +-1% .063W TKF TC0+-200	00746	MCR03-F-34R8
R100	0699-3970	1	RESISTOR 10K +-1% .063W TKF TC0+-200	09891	RK73H1J1002F
R102	0699-3970	1	RESISTOR 10K +-1% .063W TKF TC0+-200	09891	RK73H1J1002F
R103	0699-3970	1	RESISTOR 10K +-1% .063W TKF TC0+-200	09891	RK73H1J1002F
R104	0699-3970	1	RESISTOR 10K +-1% .063W TKF TC0+-200	09891	RK73H1J1002F
R105	0699-3970	1	RESISTOR 10K +-1% .063W TKF TC0+-200	09891	RK73H1J1002F
R106	0699-3924	1	RESISTOR 100 +-1% .063W TKF TC0+-200	00746	MCR03-F-1000
R107	0699-2840	1	RESISTOR 2.5K +-0.1% .125W TF TC0+-25	02499	W1206R032501BT
R108	0699-2823	1	RESISTOR 8K +-0.1% .125W TF TC0+-25	02499	W1206R038001BT
R110	0699-1363	1	RESISTOR 61.9 +-1% .125W TKF TC0+-100	05524	CRCW120661R9F
R111	0699-3970	1	RESISTOR 10K +-1% .063W TKF TC0+-200	09891	RK73H1J1002F
U1	E4401-80065	1	PAL U1	28480	E4401-80065
U2	E4401-80066	1	PAL U2	28480	E4401-80066

 **Indicates factory-selected value*

Agilent Part Number E4401-60083
Fast ADC (Option AYX)

Reference Designator	Agilent Part Number	Qty	Description	Mgr Code	Mfr Part Number
U3	E4401-80012	1	PAL	28480	E4401-80012
U4	E4401-80067	1	PAL U4	28480	E4401-80067
U6	1826-3405	1	A/D 10-BIT 28-P-SOIC BICMOS	03285	AD9050BR
U14	1826-2153	1	D/A 12-BIT 20-PLCC CMOS	03285	AD7545AKP
U16	1826-1687	1	IC PWR MGT-V-REF-FXD 9.95/10.05V 8 PINS	10858	LT1021DCS8-10
U28	1820-8486	1	IC FF CMOS/ACT D-TYPE POS-EDGE-TRIG COM	36633	MC74ACT273DWR2
U34	1826-1687	1	IC PWR MGT-V-REF-FXD 9.95/10.05V 8 PINS	10858	LT1021DCS8-10
U35	1821-2042	1	IC-INTERFACE DRVR CMOS CLOCK 20-SOIC	02037	MC88916DW70
U36	1826-3409	1	IC WIDEBAND AMPL HS 8 PIN PLSTC-SOIC	03285	AD8041AR
U37	1826-3409	1	IC WIDEBAND AMPL HS 8 PIN PLSTC-SOIC	03285	AD8041AR
U38	1826-3032	1	ANALOG MULTIPLEXER 8 CHNL 20 -PLCC	05524	DG534ADN
U39	1826-2981	1	IC OP AMP PRCN DUAL 8 PIN PLSTC-SOIC	10858	LT1124CS8
U40	1826-2786	1	IC OP AMP VID-SPCL-FCTN SINGLE 8 PIN	03285	AD810AR
U41	1826-2786	1	IC OP AMP VID-SPCL-FCTN SINGLE 8 PIN	03285	AD810AR
U42	1826-2176	1	IC OP AMP PRCN DUAL 8 PIN PLSTC-SOIC	03285	AD712JR
U44	1826-1950	1	IC COMPARATOR HS SINGLE 8 PIN PLSTC-SOIC	10858	LT1016CS8
U45	1821-0457	1	IC FF BICMOS/ABT D-TYPE POS-EDGE-TRIG	02910	74ABT821D
U46	1821-0055	1	IC SCHMITT-TRIG CMOS/ACT NAND QUAD 2-INP	36633	MC74ACT132D
U47	1820-8941	1	IC MUXR/DATA-SEL CMOS/ACT 4-TO-1-LINE	02237	74ACT253SCX.
U48	1820-8928	1	IC TRANSCEIVER BICMOS/ABT BUS DUAL 8-BIT	01698	SN74ABT16245ADL
U49	1820-8927	1	IC DRVR BICMOS/ABT LINE 16-BIT	02910	74ABT16244ADL
U50	1820-7247	1	IC CNTR CMOS/AC BIN UP/DOWN SYNC/ ASYNC	02237	74AC191SCX.
U51	1820-7247	1	IC CNTR CMOS/AC BIN UP/DOWN SYNC/ ASYNC	02237	74AC191SCX.
U52	1820-7247	1	IC CNTR CMOS/AC BIN UP/DOWN SYNC/ ASYNC	02237	74AC191SCX.
U53	1820-6277	1	IC SHF-RGTR CMOS/HC SYNC/ASYNC SERIAL-IN	02237	MM74HC595M

**Indicates factory-selected value*

5300 D-E4401-60083-2

SYM	REVISIONS	APPROVED	DATE
A	AS ISSUED /CO		

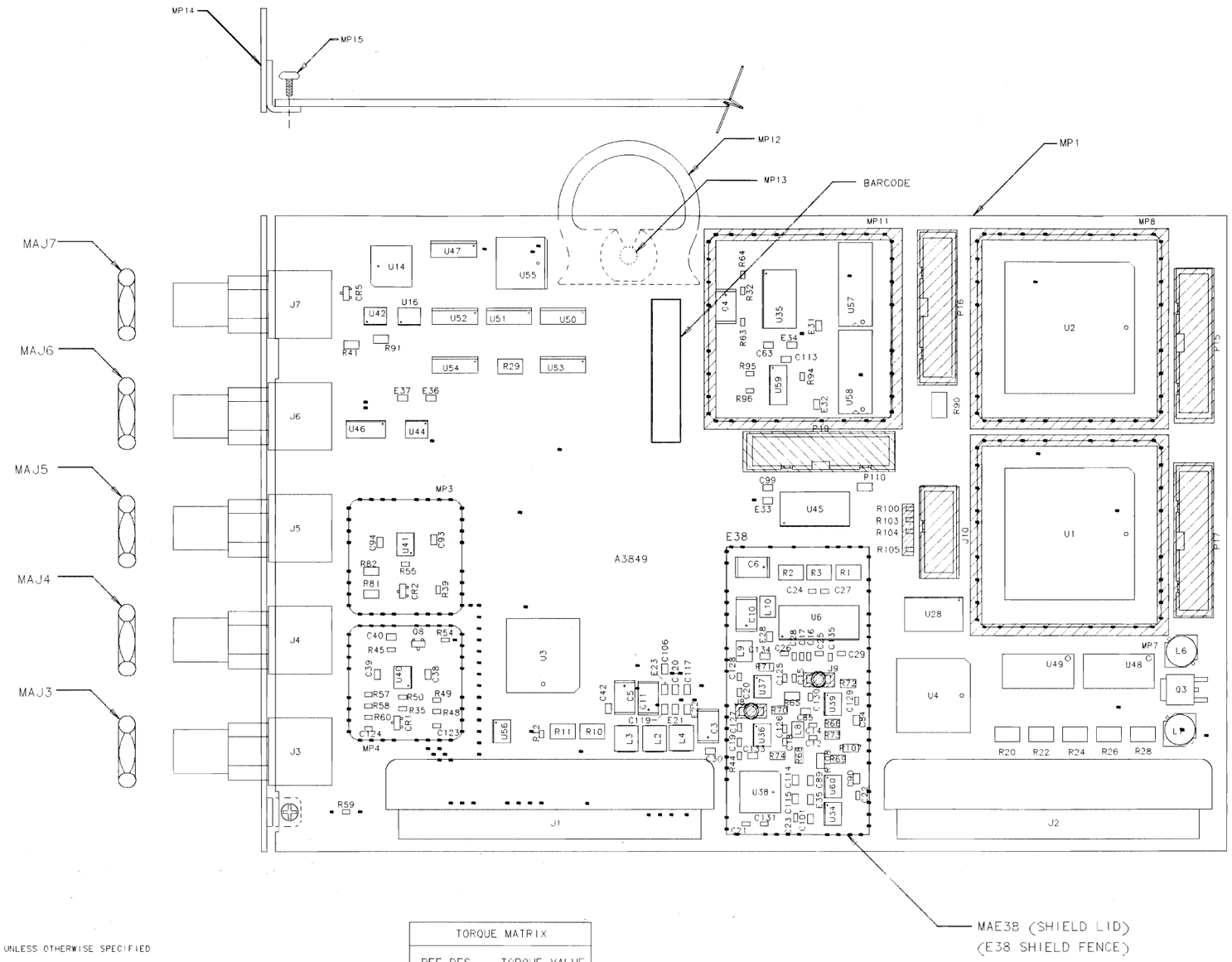

NOTES: UNLESS OTHERWISE SPECIFIED

1 USE RAW BOARD PART NUMBER E4401-20083.

2 DO NOT LOAD CROSS HATCHED ▨ PARTS.

TORQUE MATRIX	
REF DES	TORQUE VALUE
MPAJ7	20 IN-LBS
MPAJ6	20 IN-LBS
MPAJ5	20 IN-LBS
MPAJ4	20 IN-LBS
MPAJ3	20 IN-LBS
MP15	5 IN-LBS

TOP SIDE

SEE MATERIAL LIST E4401-60083

HP PROPRIETARY
THIS DOCUMENT CONTAINS CONFIDENTIAL, PROPRIETARY INFORMATION THAT IS HEWLETT-PACKARD (HP) PROPERTY. DO NOT DISCLOSE TO OR DUPLICATE FOR OTHERS EXCEPT AS AUTHORIZED BY HP.

UNLESS OTHERWISE SPECIFIED, DIMENSIONS ARE IN INCHES
TOLERANCES: XX.XXX .010 XX.XX .02
THIRD ANGLE PROJECTION
DO NOT SCALE THIS DRAWING

DRAWN BY DATE
ENGINEER/CHECKER DATE
RELEASE TO PROD. DATE
SUPERSEDES DWG.

TITLE: ASSEMBLY, PWB FADC

MENTOR FILENAME
SCALE NONE
SHEET 1 OF 2

HEWLETT PACKARD
E4401-60083
PART NUMBER
D-E4401-60083-2

5300 D-E4401-60083-3

SYM	REVISIONS	APPROVED	DATE
A	AS ISSUED /CQ		

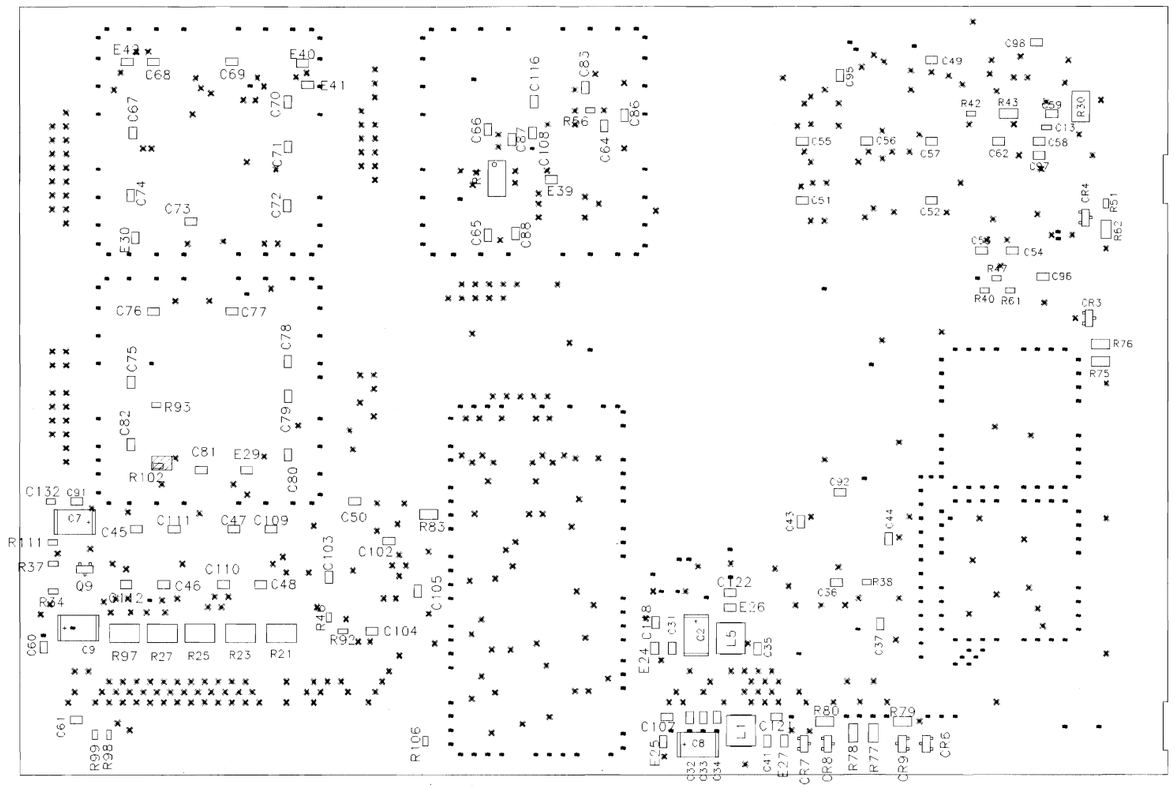

BOTTOM SIDE

HP PROPRIETARY
THIS DOCUMENT CONTAINS CONFIDENTIAL, PROPRIETARY INFORMATION THAT IS HEWLETT-PACKARD (HP) PROPERTY. DO NOT DISCLOSE TO OR DUPLICATE FOR OTHERS EXCEPT AS AUTHORIZED BY HP

UNLESS OTHERWISE SPECIFIED, DIMENSIONS ARE IN INCHES
TOLERANCES: XX.XXX .010 XX.XX .02
THIRD ANGLE PROJECTION
DO NOT SCALE THIS DRAWING

DRAWN BY — DATE
ENGINEER/CHECKER — DATE
RELEASE TO PROD. — DATE
SUPERSEDES DWG

ASSEMBLY, PWB
FADC
TITLE

MENTOR FILENAME
SCALE NONE
SHEET 2 OF 2
PART NUMBER E4401-60083
D-E4401-60083-2

HEWLETT PACKARD

D-E4401-60083-1

REV	INFORMATION	APPROVED	DATE
A	AS ISSUED		

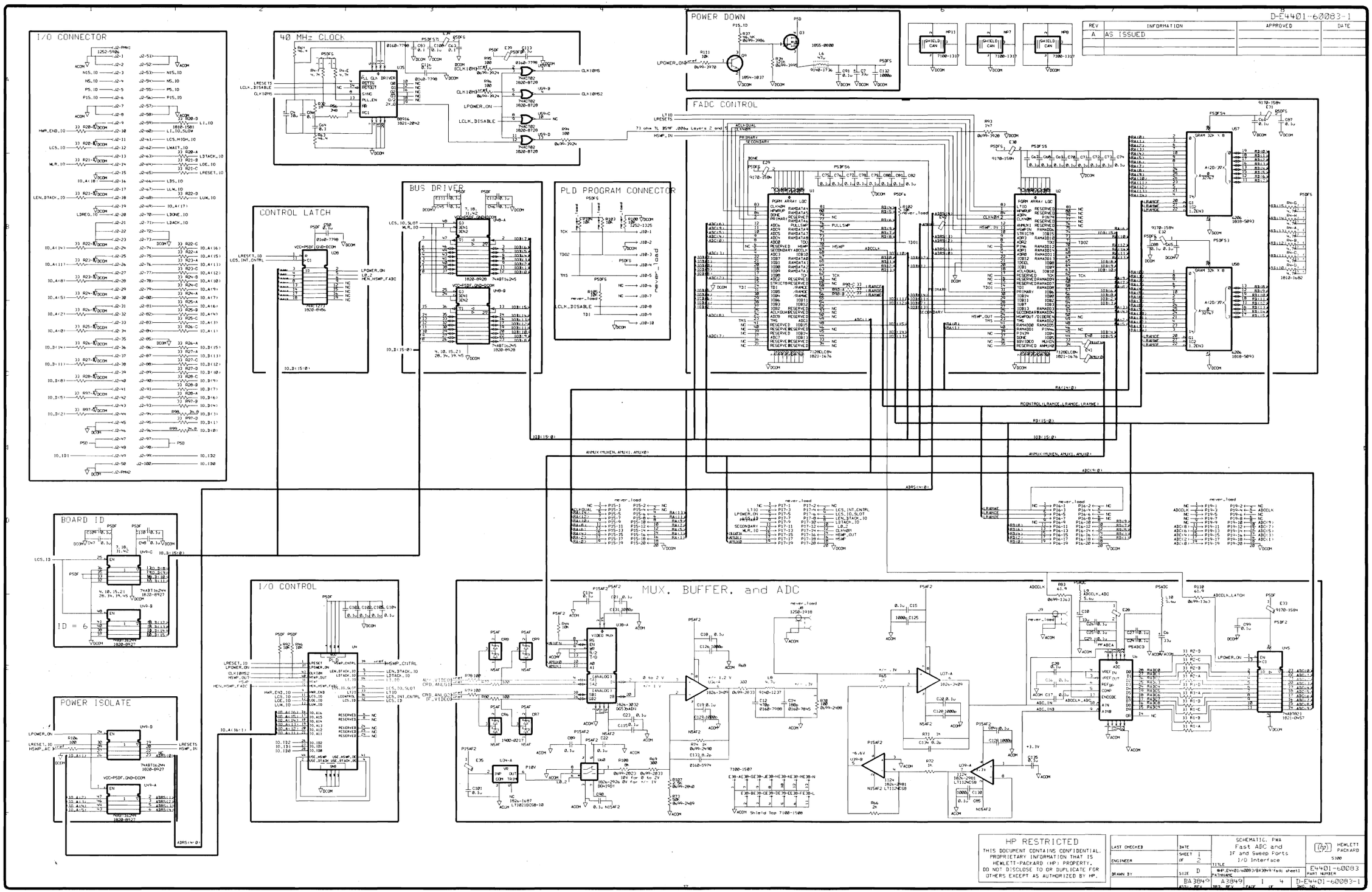

HP RESTRICTED
THIS DOCUMENT CONTAINS CONFIDENTIAL, PROPRIETARY INFORMATION THAT IS HEWLETT-PACKARD (HP) PROPERTY. DO NOT DISCLOSE TO OR DUPLICATE FOR OTHERS EXCEPT AS AUTHORIZED BY HP.

LAST CHECKED	DATE	SCHEMATIC, PWA Fast ADC and IF and Sweep Ports I/O Interface	HEWLETT PACKARD 5300
ENGINEER	SHEET 1 OF 2	TITLE	
DRAWN BY	SIZE D	HP E4401/60083/BA3849/fadc sheet1 PATHNAME	E4401-60083 PART NUMBER
	BA 3849 ASSY REV	A 3849 BRD REV	1 4 PAGE OF	D-E4401-60083-1 DWG NO

REVISIONS
SEE PAGE 1 FOR REVISION HISTORY

POWER SUPPLY

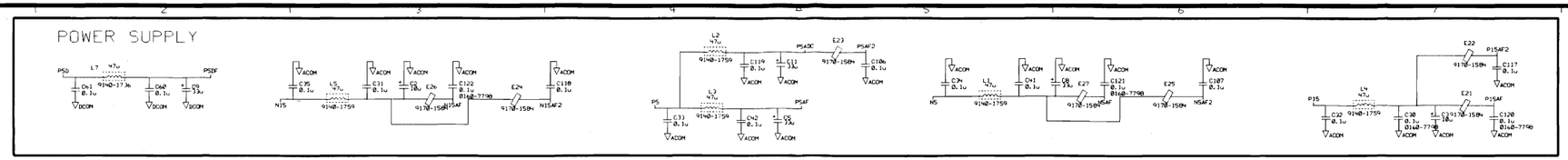

ANALOG CONNECTOR

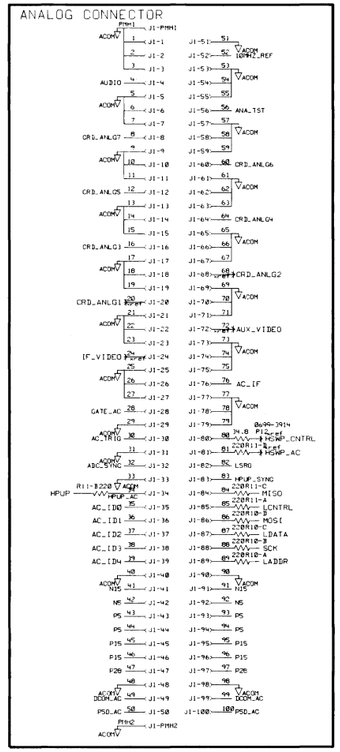

ADDRESS AND CONTROL

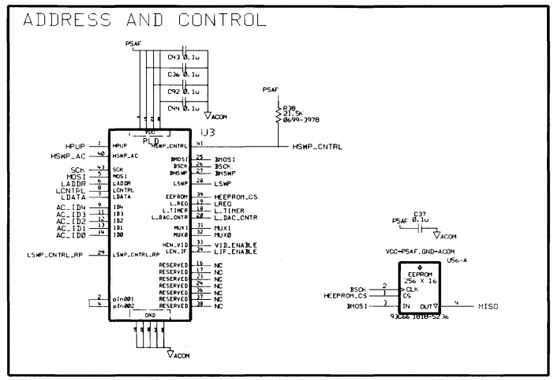

SWEEP_RAMP

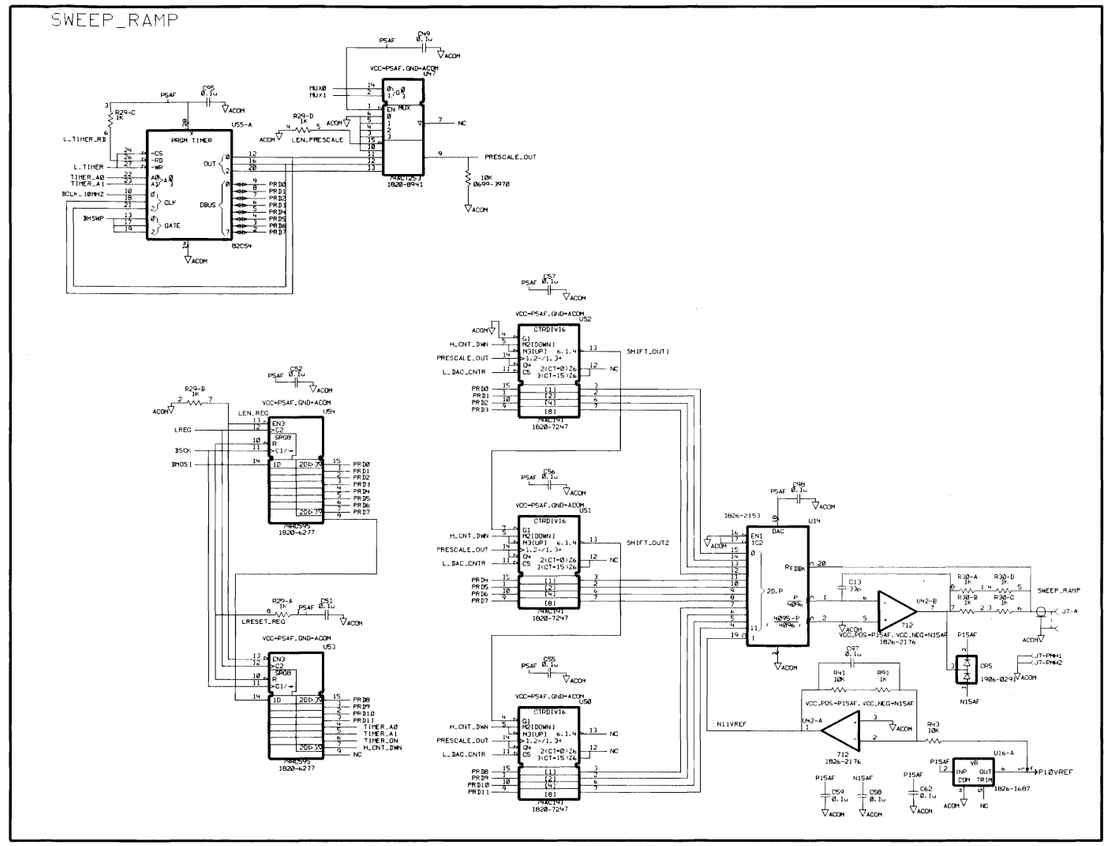

10 MHZ

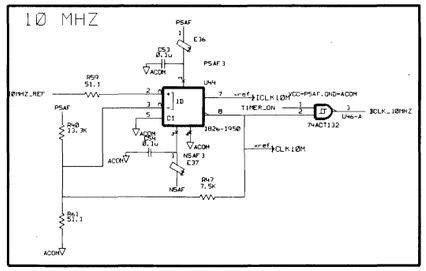

HSWEEP_CONTROL

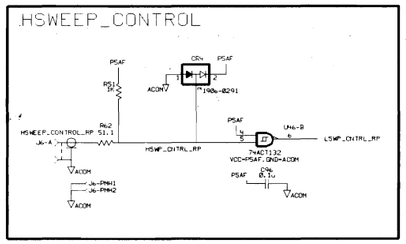

HSWEEP

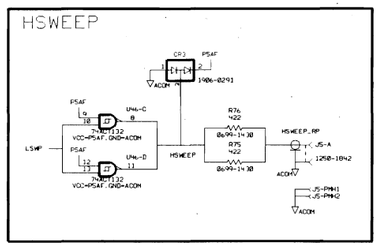

AUX VIDEO

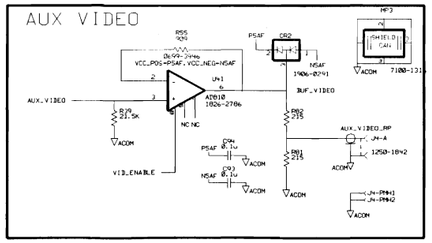

AUX IF

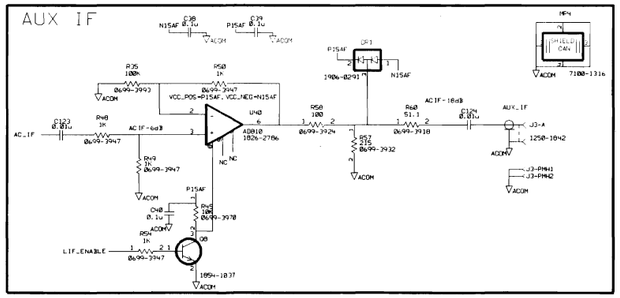

REAR PANEL MOUNTING

HP RESTRICTED
THIS DOCUMENT CONTAINS CONFIDENTIAL, PROPRIETARY INFORMATION THAT IS HEWLETT-PACKARD (HP) PROPERTY. DO NOT DISCLOSE TO OR DUPLICATE FOR OTHERS EXCEPT AS AUTHORIZED BY HP.

LAST CHECKED	DATE	SCHEMATIC, PWA Fast ADC and IF and Sweep Ports I/O Interface
ENGINEER	SHEET 2 OF 2	TITLE: 8HP_EVW01 60083/A3849/fadc sheet2
DRAWN BY	SIZE D	PATHNAME
	A3849 ASSY REV	A3849 SCH REV 2 PAGE 4 OF

HEWLETT PACKARD 5300

E4401-60083 PART NUMBER

D-E4401-60083-1 DWG NO

REVISIONS
SEE PAGE 1 FOR REVISION HISTORY

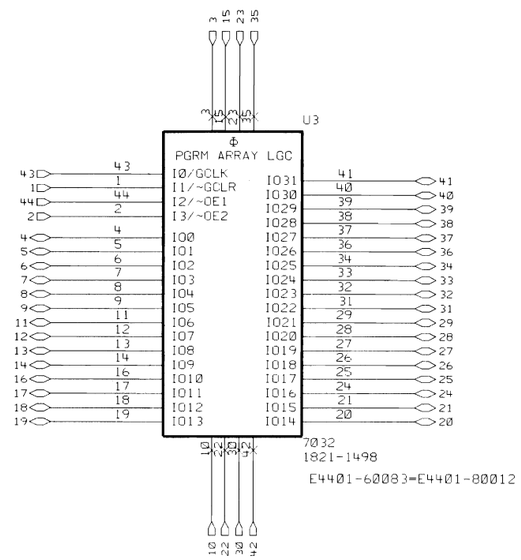

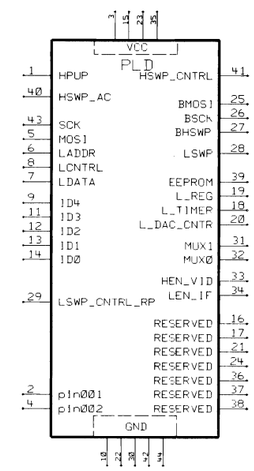

HP RESTRICTED

THIS DOCUMENT CONTAINS CONFIDENTIAL, PROPRIETARY INFORMATION THAT IS HEWLETT-PACKARD (HP) PROPERTY. DO NOT DISCLOSE TO OR DUPLICATE FOR OTHERS EXCEPT AS AUTHORIZED BY HP.

LAST CHECKED	DATE	SCHEMATIC. PWA Fast ADC and IF and Sweep Ports I/O interface	HEWLETT PACKARD 5300
ENGINEER	SHEET 1 OF 1	TITLE	
DRAWN BY	SIZE B	$HP_E4401/60083/BA3849/stdio.pal sheet1 PATHNAME	E4401-60083 PART NUMBER
	BA3849 ASSY. REV	A3849 BRD. REV	PAGE 3 OF 4	B-E4401-60083-1 DWG. NO.

REVISIONS
SEE PAGE 1 FOR REVISION HISTORY

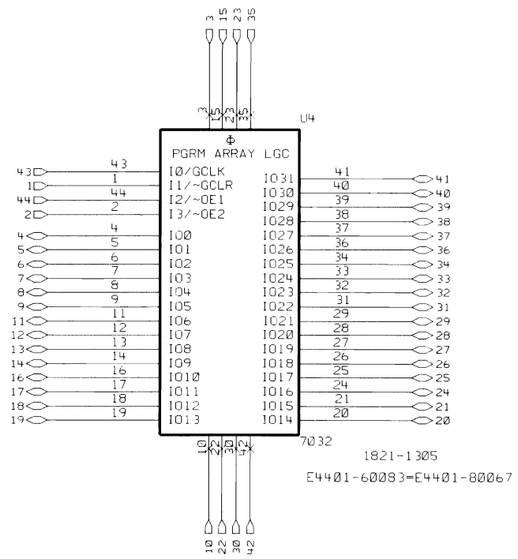

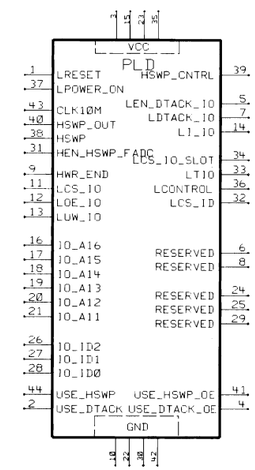

HP RESTRICTED

THIS DOCUMENT CONTAINS CONFIDENTIAL. PROPRIETARY INFORMATION THAT IS HEWLETT-PACKARD (HP) PROPERTY. DO NOT DISCLOSE TO OR DUPLICATE FOR OTHERS EXCEPT AS AUTHORIZED BY HP.

LAST CHECKED	DATE	SCHEMATIC. PWA Fast ADC and IF and Sweep Ports I/O interface	HEWLETT PACKARD 5300
ENGINEER	SHEET 1 OF 1	TITLE	
DRAWN BY	SIZE B	$HP_E4401/60083/BA3849/fadc.pal sheet1 PATHNAME	E4401-60083 PART NUMBER
	BA3849 ASSY. REV	A3849 BRD. REV / PAGE 4 OF 4	B-E4401-60083-1 DWG. NO.

Component-Level Information Packet for E4401-60082

FM Demod (Option BAA)

Agilent Technologies

Agilent Part Number: E4401-90124
Printed in Malaysia April 2001

Notice

The information contained in this document is subject to change without notice. Agilent Technologies makes no warranty of any kind with regard to this material, including but not limited to, the implied warranties of merchantability and fitness for a particular purpose. Agilent Technologies shall not be liable for errors contained herein or for incidental or consequential damages in connection with the furnishing, performance, or use of this material.

© Copyright Agilent Technologies Inc. 2000, 2001
All Rights Reserved. Reproduction, adaptation, or translation without prior written permission is prohibited, except as allowed under the copyright laws.

Agilent Part Number E4401-60082
FM Demod (Option BAA)

Reference Designator	Agilent Part Number	Qty	Description	Mgr Code	Mfr Part Number
C1	0180-4287	1	CAP-FXD 10uF +-20% 35 V TA	02010	TAJD106M035
C2	0180-4287	1	CAP-FXD 10uF +-20% 35 V TA	02010	TAJD106M035
C5	0180-4228	1	CAP-FXD 47uF +-20% 10 V TA	02010	TAJD476M010
C10	0180-4228	1	CAP-FXD 47uF +-20% 10 V TA	02010	TAJD476M010
C11	0180-4228	1	CAP-FXD 47uF +-20% 10 V TA	02010	TAJD476M010
C28	0160-7986	1	CAP-FXD 390pF +-5% 50 V CER C0G	06352	C1608COG1H391J
C29	0160-7986	1	CAP-FXD 390pF +-5% 50 V CER C0G	06352	C1608COG1H391J
C30	0160-7984	1	CAP-FXD 300pF +-5% 50 V CER C0G	02010	06035A301JATA
C31	0160-7983	1	CAP-FXD 240pF +-5% 50 V CER C0G	02010	06035A241JAT
C32	0160-7775	1	CAP-FXD 5.6pF +-4.5% 50 V CER C0G	02010	06035A5R6CAT
C33	0160-7975	1	CAP-FXD 51pF +-5% 50 V CER C0G	06352	C1608COG1H510J
C34	0160-7974	1	CAP-FXD 43pF +-5% 50 V CER C0G	06352	C1608COG1H430J
C35	0160-7971	1	CAP-FXD 20pF +-5% 50 V CER C0G	02010	06035A200JAT
C36	0160-7971	1	CAP-FXD 20pF +-5% 50 V CER C0G	02010	06035A200JAT
C39	0160-7861	1	CAP-FXD 47pF +-5% 50 V CER C0G	02010	06035A470JAT
C40	0160-7860	1	CAP-FXD 4.7pF +-5.31% 50 V CER C0G	02010	06035A4R7CAT
C41	0160-7776	1	CAP-FXD 3.9pF +-6.4% 50 V CER C0G	02010	06035A3R9CAT
C42	0160-7855	1	CAP-FXD 33pF +-5% 50 V CER C0G	02010	06035A330JAT
C43	0160-7855	1	CAP-FXD 33pF +-5% 50 V CER C0G	02010	06035A330JAT
C44	0160-7855	1	CAP-FXD 33pF +-5% 50 V CER C0G	02010	06035A330JAT
C46	0160-7841	1	CAP-FXD 15pF +-5% 50 V CER C0G	02010	06035A150JAT
C47	0160-7841	1	CAP-FXD 15pF +-5% 50 V CER C0G	02010	06035A150JAT
C48	0160-7798	1	CAP-FXD 0.1uF +-10% 50 V CER X7R	06352	C2012X7R1H104K
C49	0160-7798	1	CAP-FXD 0.1uF +-10% 50 V CER X7R	06352	C2012X7R1H104K
C50	0160-7798	1	CAP-FXD 0.1uF +-10% 50 V CER X7R	06352	C2012X7R1H104K
C51	0160-7798	1	CAP-FXD 0.1uF +-10% 50 V CER X7R	06352	C2012X7R1H104K
C52	0160-7798	1	CAP-FXD 0.1uF +-10% 50 V CER X7R	06352	C2012X7R1H104K
C53	0160-7798	1	CAP-FXD 0.1uF +-10% 50 V CER X7R	06352	C2012X7R1H104K

Agilent Part Number E4401-60082
FM Demod (Option BAA)

Reference Designator	Agilent Part Number	Qty	Description	Mgr Code	Mfr Part Number
C54	0160-7798	1	CAP-FXD 0.1uF +-10% 50 V CER X7R	06352	C2012X7R1H104K
C55	0160-7798	1	CAP-FXD 0.1uF +-10% 50 V CER X7R	06352	C2012X7R1H104K
C56	0160-7798	1	CAP-FXD 0.1uF +-10% 50 V CER X7R	06352	C2012X7R1H104K
C57	0160-7798	1	CAP-FXD 0.1uF +-10% 50 V CER X7R	06352	C2012X7R1H104K
C58	0160-7798	1	CAP-FXD 0.1uF +-10% 50 V CER X7R	06352	C2012X7R1H104K
C59	0160-7798	1	CAP-FXD 0.1uF +-10% 50 V CER X7R	06352	C2012X7R1H104K
C60	0160-7798	1	CAP-FXD 0.1uF +-10% 50 V CER X7R	06352	C2012X7R1H104K
C61	0160-7798	1	CAP-FXD 0.1uF +-10% 50 V CER X7R	06352	C2012X7R1H104K
C62	0160-7798	1	CAP-FXD 0.1uF +-10% 50 V CER X7R	06352	C2012X7R1H104K
C63	0160-7798	1	CAP-FXD 0.1uF +-10% 50 V CER X7R	06352	C2012X7R1H104K
C64	0160-7798	1	CAP-FXD 0.1uF +-10% 50 V CER X7R	06352	C2012X7R1H104K
C65	0160-7798	1	CAP-FXD 0.1uF +-10% 50 V CER X7R	06352	C2012X7R1H104K
C66	0160-7798	1	CAP-FXD 0.1uF +-10% 50 V CER X7R	06352	C2012X7R1H104K
C67	0160-7798	1	CAP-FXD 0.1uF +-10% 50 V CER X7R	06352	C2012X7R1H104K
C68	0160-7798	1	CAP-FXD 0.1uF +-10% 50 V CER X7R	06352	C2012X7R1H104K
C82	0160-7798	1	CAP-FXD 0.1uF +-10% 50 V CER X7R	06352	C2012X7R1H104K
C83	0160-7798	1	CAP-FXD 0.1uF +-10% 50 V CER X7R	06352	C2012X7R1H104K
C84	0160-7798	1	CAP-FXD 0.1uF +-10% 50 V CER X7R	06352	C2012X7R1H104K
C85	0160-7798	1	CAP-FXD 0.1uF +-10% 50 V CER X7R	06352	C2012X7R1H104K
C86	0160-7798	1	CAP-FXD 0.1uF +-10% 50 V CER X7R	06352	C2012X7R1H104K
C88	0160-7798	1	CAP-FXD 0.1uF +-10% 50 V CER X7R	06352	C2012X7R1H104K
C89	0160-7798	1	CAP-FXD 0.1uF +-10% 50 V CER X7R	06352	C2012X7R1H104K
C90	0160-7798	1	CAP-FXD 0.1uF +-10% 50 V CER X7R	06352	C2012X7R1H104K
C91	0160-7798	1	CAP-FXD 0.1uF +-10% 50 V CER X7R	06352	C2012X7R1H104K
C92	0160-7798	1	CAP-FXD 0.1uF +-10% 50 V CER X7R	06352	C2012X7R1H104K
C93	0160-7798	1	CAP-FXD 0.1uF +-10% 50 V CER X7R	06352	C2012X7R1H104K
C94	0160-7798	1	CAP-FXD 0.1uF +-10% 50 V CER X7R	06352	C2012X7R1H104K
C95	0160-7798	1	CAP-FXD 0.1uF +-10% 50 V CER X7R	06352	C2012X7R1H104K
C96	0160-7798	1	CAP-FXD 0.1uF +-10% 50 V CER X7R	06352	C2012X7R1H104K
C97	0160-7798	1	CAP-FXD 0.1uF +-10% 50 V CER X7R	06352	C2012X7R1H104K

 **Indicates factory-selected value*

Agilent Part Number E4401-60082
FM Demod (Option BAA)

Reference Designator	Agilent Part Number	Qty	Description	Mgr Code	Mfr Part Number
C98	0160-7798	1	CAP-FXD 0.1uF +-10% 50 V CER X7R	06352	C2012X7R1H104K
C99	0160-7798	1	CAP-FXD 0.1uF +-10% 50 V CER X7R	06352	C2012X7R1H104K
C100	0160-7798	1	CAP-FXD 0.1uF +-10% 50 V CER X7R	06352	C2012X7R1H104K
C101	0160-7798	1	CAP-FXD 0.1uF +-10% 50 V CER X7R	06352	C2012X7R1H104K
C102	0160-7798	1	CAP-FXD 0.1uF +-10% 50 V CER X7R	06352	C2012X7R1H104K
C103	0160-7798	1	CAP-FXD 0.1uF +-10% 50 V CER X7R	06352	C2012X7R1H104K
C105	0160-7798	1	CAP-FXD 0.1uF +-10% 50 V CER X7R	06352	C2012X7R1H104K
C106	0160-7798	1	CAP-FXD 0.1uF +-10% 50 V CER X7R	06352	C2012X7R1H104K
C109	0160-7798	1	CAP-FXD 0.1uF +-10% 50 V CER X7R	06352	C2012X7R1H104K
C110	0160-7798	1	CAP-FXD 0.1uF +-10% 50 V CER X7R	06352	C2012X7R1H104K
C111	0160-7798	1	CAP-FXD 0.1uF +-10% 50 V CER X7R	06352	C2012X7R1H104K
C112	0160-7798	1	CAP-FXD 0.1uF +-10% 50 V CER X7R	06352	C2012X7R1H104K
C115	0160-7798	1	CAP-FXD 0.1uF +-10% 50 V CER X7R	06352	C2012X7R1H104K
C116	0160-7798	1	CAP-FXD 0.1uF +-10% 50 V CER X7R	06352	C2012X7R1H104K
C117	0160-7798	1	CAP-FXD 0.1uF +-10% 50 V CER X7R	06352	C2012X7R1H104K
C118	0160-7798	1	CAP-FXD 0.1uF +-10% 50 V CER X7R	06352	C2012X7R1H104K
C119	0160-7798	1	CAP-FXD 0.1uF +-10% 50 V CER X7R	06352	C2012X7R1H104K
C120	0160-7798	1	CAP-FXD 0.1uF +-10% 50 V CER X7R	06352	C2012X7R1H104K
C121	0160-7798	1	CAP-FXD 0.1uF +-10% 50 V CER X7R	06352	C2012X7R1H104K
C122	0160-7798	1	CAP-FXD 0.1uF +-10% 50 V CER X7R	06352	C2012X7R1H104K
C123	0160-7798	1	CAP-FXD 0.1uF +-10% 50 V CER X7R	06352	C2012X7R1H104K
C124	0160-7798	1	CAP-FXD 0.1uF +-10% 50 V CER X7R	06352	C2012X7R1H104K
C132	0160-7798	1	CAP-FXD 0.1uF +-10% 50 V CER X7R	06352	C2012X7R1H104K
C133	0160-7798	1	CAP-FXD 0.1uF +-10% 50 V CER X7R	06352	C2012X7R1H104K
C134	0160-7798	1	CAP-FXD 0.1uF +-10% 50 V CER X7R	06352	C2012X7R1H104K
C135	0160-7798	1	CAP-FXD 0.1uF +-10% 50 V CER X7R	06352	C2012X7R1H104K
C136	0160-7798	1	CAP-FXD 0.1uF +-10% 50 V CER X7R	06352	C2012X7R1H104K
C137	0160-7798	1	CAP-FXD 0.1uF +-10% 50 V CER X7R	06352	C2012X7R1H104K
C142	0160-7775	1	CAP-FXD 5.6pF +-4.5% 50 V CER C0G	02010	06035A5R6CAT
C160	0160-7749	1	CAP-FXD 22pF +-5% 50 V CER C0G	02010	06035A220JAT

**Indicates factory-selected value*

Agilent Part Number E4401-60082
FM Demod (Option BAA)

Reference Designator	Agilent Part Number	Qty	Description	Mgr Code	Mfr Part Number
C161	0160-7792	1	CAP-FXD 18pF +-5% 50 V CER C0G	02010	06035A180JAT
C162	0160-7749	1	CAP-FXD 22pF +-5% 50 V CER C0G	02010	06035A220JAT
C163	0160-7749	1	CAP-FXD 22pF +-5% 50 V CER C0G	02010	06035A220JAT
C164	0160-7748	1	CAP-FXD 1000pF +-10% 50 V CER X7R	02010	06035C102KAT
C165	0160-7748	1	CAP-FXD 1000pF +-10% 50 V CER X7R	02010	06035C102KAT
C166	0160-7748	1	CAP-FXD 1000pF +-10% 50 V CER X7R	02010	06035C102KAT
C168	0160-7864	1	CAP-FXD 56pF +-5% 50 V CER C0G	02010	06035A560JAT
C171	0160-7699	1	CAP-FXD 3300pF +-10% 50 V CER X7R	02010	06035C332KAT
C172	0160-7792	1	CAP-FXD 18pF +-5% 50 V CER C0G	02010	06035A180JAT
C174	0160-5944	1	CAP-FXD 0.047uF +-10% 50 V CER X7R	02010	08055C473KATA
C176	0160-8278	1	CAP-FXD 2.2uF +80% -20% 16 V CER Y5V	02010	1206YG225ZATA
C179	0160-8278	1	CAP-FXD 2.2uF +80% -20% 16 V CER Y5V	02010	1206YG225ZATA
C180	0160-7975	1	CAP-FXD 51pF +-5% 50 V CER C0G	06352	C1608COG1H510J
C181	0160-7975	1	CAP-FXD 51pF +-5% 50 V CER C0G	06352	C1608COG1H510J
C184	0160-7798	1	CAP-FXD 0.1uF +-10% 50 V CER X7R	06352	C2012X7R1H104K
C185	0160-7798	1	CAP-FXD 0.1uF +-10% 50 V CER X7R	06352	C2012X7R1H104K
C186	0160-7798	1	CAP-FXD 0.1uF +-10% 50 V CER X7R	06352	C2012X7R1H104K
C187	0160-7798	1	CAP-FXD 0.1uF +-10% 50 V CER X7R	06352	C2012X7R1H104K
C188	0160-7798	1	CAP-FXD 0.1uF +-10% 50 V CER X7R	06352	C2012X7R1H104K
C189	0160-7798	1	CAP-FXD 0.1uF +-10% 50 V CER X7R	06352	C2012X7R1H104K
C192	0160-8278	1	CAP-FXD 2.2uF +80% -20% 16 V CER Y5V	02010	1206YG225ZATA
C193	0160-7988	1	CAP-FXD 470pF +-5% 50 V CER C0G	06352	C1608COG1H471J
C194	0160-7798	1	CAP-FXD 0.1uF +-10% 50 V CER X7R	06352	C2012X7R1H104K
C195	0160-7798	1	CAP-FXD 0.1uF +-10% 50 V CER X7R	06352	C2012X7R1H104K
CR1	1902-1574	1	DIODE-ZNR 6.8V 5% TO-236 (SOT-23)	02910	BZX84C6V8
CR8	1906-0291	1	DIODE-DUAL 70V 100MA T0-236AA	02910	BAV99
CR10	1906-0291	1	DIODE-DUAL 70V 100MA T0-236AA	02910	BAV99
CR11	1906-0291	1	DIODE-DUAL 70V 100MA T0-236AA	02910	BAV99
CR13	1902-1574	1	DIODE-ZNR 6.8V 5% TO-236 (SOT-23)	02910	BZX84C6V8
DS1	1990-0835	1	LED-LAMP LM-INT4.2MCD IF30MA-MAX BVR5	01542	HLMP-1503-D000

 **Indicates factory-selected value*

Agilent Part Number E4401-60082
FM Demod (Option BAA)

Reference Designator	Agilent Part Number	Qty	Description	Mgr Code	Mfr Part Number
E23	9170-1421	1	CORE-SHIELDING BEAD	06352	HF50ACB-322513
E24	9170-1421	1	CORE-SHIELDING BEAD	06352	HF50ACB-322513
E25	9170-1421	1	CORE-SHIELDING BEAD	06352	HF50ACB-322513
J1	1252-5906	1	CONN-RECT MICRORBN 100-CKT 100-CONT	01380	2-557101-5
J2	1250-2464	1	CONNECTOR-RF BNC FEMALE PC-W/O-STDF	01380	222092-1
J3	1250-2464	1	CONNECTOR-RF BNC FEMALE PC-W/O-STDF	01380	222092-1
L1	9140-1736	1	INDUCTOR 47uH +20% -20% 7.3W-mmX7.3LG-mm	06353	E636CY-470M-P3
L2	9140-1736	1	INDUCTOR 47uH +20% -20% 7.3W-mmX7.3LG-mm	06353	E636CY-470M-P3
L3	9140-1736	1	INDUCTOR 47uH +20% -20% 7.3W-mmX7.3LG-mm	06353	E636CY-470M-P3
L7	9140-1735	1	INDUCTOR 22uH +20% -20% 7.3W-mmX7.3LG-mm	06353	636CY-220M
L8	9140-1736	1	INDUCTOR 47uH +20% -20% 7.3W-mmX7.3LG-mm	06353	E636CY-470M-P3
L10	9140-1433	1	INDUCTOR 120uH +-5% 3.4W-mmX4.8LG-mm	28480	9140-1433
L11	9140-1432	1	INDUCTOR 39uH +-5% 3.4W-mmX4.8LG-mm Q50	28480	9140-1432
L12	9140-1108	1	INDUCTOR 3.3uH +-5% 3.4W-mmX4.8LG-mm	28480	9140-1108
L13	9140-1429	1	INDUCTOR 3.9uH +-5% 3.4W-mmX4.8LG-mm	28480	9140-1429
L14	9140-1418	1	INDUCTOR 2.7uH +-5% 3.4W-mmX4.8LG-mm	28480	9140-1418
L17	9140-1596	1	INDUCTOR 22uH +-5% 2.8W-mmX3.4LG-mm Q30	06352	NL322522T-220J
L18	9140-1599	1	INDUCTOR 12uH +-5% 2.8W-mmX3.4LG-mm Q30	06352	NL322522T-120J
L19	9140-1121	1	INDUCTOR 100uH +-5% 3.4W-mmX4.8LG-mm	06352	NL453232T-101J
L20	9140-1121	1	INDUCTOR 100uH +-5% 3.4W-mmX4.8LG-mm	06352	NL453232T-101J
L21	9140-1112	1	INDUCTOR 8.2uH +-5% 3.4W-mmX4.8LG-mm	28480	9140-1112
L22	9140-1111	1	INDUCTOR 6.8uH +-5% 3.4W-mmX4.8LG-mm	28480	9140-1111
L28	9140-1107	1	INDUCTOR 2.2uH +-5% 3.4W-mmX4.8LG-mm	28480	9140-1107
L29	9140-0927	1	INDUCTOR 82uH +-5% 3.4W-mmX4.8LG-mm Q50	13918	IC1812-820K
L30	9140-0927	1	INDUCTOR 82uH +-5% 3.4W-mmX4.8LG-mm Q50	13918	IC1812-820K
L31	9140-0927	1	INDUCTOR 82uH +-5% 3.4W-mmX4.8LG-mm Q50	13918	IC1812-820K
L32	9140-0927	1	INDUCTOR 82uH +-5% 3.4W-mmX4.8LG-mm Q50	13918	IC1812-820K
L33	9140-0927	1	INDUCTOR 82uH +-5% 3.4W-mmX4.8LG-mm Q50	13918	IC1812-820K
MAJ2	2950-0054	1	NUT-HEX-DBL-CHAM 1/2-28-THD .125-IN-THK	04567	2950-0054
MAJ3	2950-0054	1	NUT-HEX-DBL-CHAM 1/2-28-THD .125-IN-THK	04567	2950-0054

**Indicates factory-selected value*

Agilent Part Number E4401-60082
FM Demod (Option BAA)

Reference Designator	Agilent Part Number	Qty	Description	Mgr Code	Mfr Part Number
MAY1	0340-1544	1	SPACER-COMPONENT PERM-O-PAD	03724	470-025
MAY2	0340-1544	1	SPACER-COMPONENT PERM-O-PAD	03724	470-025
MBJ3	0515-1941	1	SCREW-MACHINE ASSEMBLY M2.5 X 0.45	05610	0515-1941
MCJ3	0515-1941	1	SCREW-MACHINE ASSEMBLY M2.5 X 0.45	05610	0515-1941
MDJ3	E4401-00044	1	PANEL RR-FMDMOD	28480	E4401-00044
MP3	7100-1317	1	CAN-SQ	01932	HU 4532-.437 + TABS
P1	1252-7020	1	CONN-RECT MICRORBN 40-CKT 40-CONT	01380	557102-5
P8	1251-0600	1	CONNECTOR-SGL CONT PIN 1.14-MM-BSC-SZ SQ	03418	16-06-0034
P9	1251-0600	1	CONNECTOR-SGL CONT PIN 1.14-MM-BSC-SZ SQ	03418	16-06-0034
P10	1251-0600	1	CONNECTOR-SGL CONT PIN 1.14-MM-BSC-SZ SQ	03418	16-06-0034
Q2	1854-1037	1	TRANSISTOR NPN SI TO-236AA PD350MW	00746	SST3904T116
Q5	1854-1037	1	TRANSISTOR NPN SI TO-236AA PD350MW	00746	SST3904T116
Q6	1854-1037	1	TRANSISTOR NPN SI TO-236AA PD350MW	00746	SST3904T116
Q11	1853-0567	1	TRANSISTOR PNP SI SOT-23 (TO-236AB)	00746	SST3906T116
Q12	1853-0567	1	TRANSISTOR PNP SI SOT-23 (TO-236AB)	00746	SST3906T116
Q16	1855-0798	1	TRANSISTOR MOSFET P-CHAN E-MODE SOT-23	02237	NDS0610
Q18	1855-0798	1	TRANSISTOR MOSFET P-CHAN E-MODE SOT-23	02237	NDS0610
Q19	1855-0734	1	TRANSISTOR MOSFET 2N7002 N-CHAN E-MODE	02910	2N7002
Q20	1855-0734	1	TRANSISTOR MOSFET 2N7002 N-CHAN E-MODE	02910	2N7002
R4	1810-1659	1	NET-RES 4 220.0 OHM 8-PIN	00746	MNR34K5ABJ221
R5	1810-1659	1	NET-RES 4 220.0 OHM 8-PIN	00746	MNR34K5ABJ221
R8	1810-1940	1	NET-RES 4 220.0 OHM 8-PIN	00746	MNR34J221
R9	1810-1940	1	NET-RES 4 220.0 OHM 8-PIN	00746	MNR34J221
R10	1810-1581	1	NET-RES 4 33.0 OHM 8-PIN	00746	MNR34K5AWJ330
R11	1810-1824	1	NET-RES 4 68.0 OHM 8-PIN	00746	MNR34J5ABJ680
R12	1810-1824	1	NET-RES 4 68.0 OHM 8-PIN	00746	MNR34J5ABJ680
R16	1810-1580	1	NET-RES 4 10.0K OHM 8-PIN	00746	MNR34K5ABJ103
R17	1810-1580	1	NET-RES 4 10.0K OHM 8-PIN	00746	MNR34K5ABJ103

 **Indicates factory-selected value*

Agilent Part Number E4401-60082
FM Demod (Option BAA)

Reference Designator	Agilent Part Number	Qty	Description	Mgr Code	Mfr Part Number
R19	0699-4016	1	RESISTOR 1M +-1% .063W TKF TC0+-200	00746	MCR03-F-1004
R20	0699-4016	1	RESISTOR 1M +-1% .063W TKF TC0+-200	00746	MCR03-F-1004
R21	0699-4016	1	RESISTOR 1M +-1% .063W TKF TC0+-200	00746	MCR03-F-1004
R22	0699-4014	1	RESISTOR 825K +-1% .063W TKF TC0+-200	09891	RK73H1J8253F
R23	0699-4012	1	RESISTOR 681K +-1% .063W TKF TC0+-200	09891	RK73H1J6813F
R24	0699-3997	1	RESISTOR 147K +-1% .063W TKF TC0+-200	09891	RK73H1J1473F
R25	0699-3995	1	RESISTOR 121K +-1% .063W TKF TC0+-200	09891	RK73H1J1213F
R27	0699-3982	1	RESISTOR 31.6K +-1% .063W TKF TC0+-200	09891	RK73H1J3162F
R28	0699-3982	1	RESISTOR 31.6K +-1% .063W TKF TC0+-200	09891	RK73H1J3162F
R44	0699-3970	1	RESISTOR 10K +-1% .063W TKF TC0+-200	09891	RK73H1J1002F
R45	0699-3970	1	RESISTOR 10K +-1% .063W TKF TC0+-200	09891	RK73H1J1002F
R47	0699-3970	1	RESISTOR 10K +-1% .063W TKF TC0+-200	09891	RK73H1J1002F
R48	0699-3970	1	RESISTOR 10K +-1% .063W TKF TC0+-200	09891	RK73H1J1002F
R50	0699-3967	1	RESISTOR 7.5K +-1% .063W TKF TC0+-200	09891	RK73H1J7501F
R54	0699-3964	1	RESISTOR 5.11K +-1% .063W TKF TC0+-200	09891	RK73H1J5111F
R55	0699-3964	1	RESISTOR 5.11K +-1% .063W TKF TC0+-200	09891	RK73H1J5111F
R58	0699-3964	1	RESISTOR 5.11K +-1% .063W TKF TC0+-200	09891	RK73H1J5111F
R59	0699-3955	1	RESISTOR 2.15K +-1% .063W TKF TC0+-200	09891	RK73H1J2151F
R60	0699-3955	1	RESISTOR 2.15K +-1% .063W TKF TC0+-200	09891	RK73H1J2151F
R61	0699-3955	1	RESISTOR 2.15K +-1% .063W TKF TC0+-200	09891	RK73H1J2151F
R62	0699-3955	1	RESISTOR 2.15K +-1% .063W TKF TC0+-200	09891	RK73H1J2151F
R67	0699-3955	1	RESISTOR 2.15K +-1% .063W TKF TC0+-200	09891	RK73H1J2151F
R69	0699-3947	1	RESISTOR 1K +-1% .063W TKF TC0+-200	00746	MCR03-F-1001
R70	0699-3947	1	RESISTOR 1K +-1% .063W TKF TC0+-200	00746	MCR03-F-1001
R71	0699-3947	1	RESISTOR 1K +-1% .063W TKF TC0+-200	00746	MCR03-F-1001
R72	0699-3947	1	RESISTOR 1K +-1% .063W TKF TC0+-200	00746	MCR03-F-1001
R73	0699-3947	1	RESISTOR 1K +-1% .063W TKF TC0+-200	00746	MCR03-F-1001
R74	0699-3947	1	RESISTOR 1K +-1% .063W TKF TC0+-200	00746	MCR03-F-1001
R75	0699-3947	1	RESISTOR 1K +-1% .063W TKF TC0+-200	00746	MCR03-F-1001
R79	0699-3947	1	RESISTOR 1K +-1% .063W TKF TC0+-200	00746	MCR03-F-1001

Agilent Part Number E4401-60082
FM Demod (Option BAA)

Reference Designator	Agilent Part Number	Qty	Description	Mgr Code	Mfr Part Number
R91	0699-3947	1	RESISTOR 1K +-1% .063W TKF TC0+-200	00746	MCR03-F-1001
R92	0699-3947	1	RESISTOR 1K +-1% .063W TKF TC0+-200	00746	MCR03-F-1001
R93	0699-3947	1	RESISTOR 1K +-1% .063W TKF TC0+-200	00746	MCR03-F-1001
R97	0699-3947	1	RESISTOR 1K +-1% .063W TKF TC0+-200	00746	MCR03-F-1001
R98	0699-3947	1	RESISTOR 1K +-1% .063W TKF TC0+-200	00746	MCR03-F-1001
R102	0699-3947	1	RESISTOR 1K +-1% .063W TKF TC0+-200	00746	MCR03-F-1001
R104	0699-3947	1	RESISTOR 1K +-1% .063W TKF TC0+-200	00746	MCR03-F-1001
R107	0699-3944	1	RESISTOR 750 +-1% .063W TKF TC0+-200	09891	RK73H1J7500F
R109	0699-3943	1	RESISTOR 681 +-1% .063W TKF TC0+-200	00746	MCR03-F-6810
R110	0699-3943	1	RESISTOR 681 +-1% .063W TKF TC0+-200	00746	MCR03-F-6810
R118	0699-3940	1	RESISTOR 464 +-1% .063W TKF TC0+-200	09891	RK73H1J4640F
R119	0699-3940	1	RESISTOR 464 +-1% .063W TKF TC0+-200	09891	RK73H1J4640F
R120	0699-3940	1	RESISTOR 464 +-1% .063W TKF TC0+-200	09891	RK73H1J4640F
R132	0699-3931	1	RESISTOR 196 +-1% .063W TKF TC0+-200	09891	RK73H1J1960F
R133	0699-3947	1	RESISTOR 1K +-1% .063W TKF TC0+-200	00746	MCR03-F-1001
R134	0699-3924	1	RESISTOR 100 +-1% .063W TKF TC0+-200	00746	MCR03-F-1000
R135	0699-3931	1	RESISTOR 196 +-1% .063W TKF TC0+-200	09891	RK73H1J1960F
R136	0699-3924	1	RESISTOR 100 +-1% .063W TKF TC0+-200	00746	MCR03-F-1000
R143	0699-3915	1	RESISTOR 38.3 +-1% .063W TKF TC0+-200	09891	RK73H1J38R3F
R144	0699-3915	1	RESISTOR 38.3 +-1% .063W TKF TC0+-200	09891	RK73H1J38R3F
R146	0699-3902	1	RESISTOR 11 +-1% .063W TKF TC0+-200	09891	RK73H1J11R0F
R148	0699-3902	1	RESISTOR 11 +-1% .063W TKF TC0+-200	09891	RK73H1J11R0F
R150	0699-2847	1	RESISTOR 2K +-0.1% .125W TF TC0+-25	01172	BLU-1206 2K .1% 25PPM
R151	0699-2847	1	RESISTOR 2K +-0.1% .125W TF TC0+-25	01172	BLU-1206 2K .1% 25PPM
R152	0699-2847	1	RESISTOR 2K +-0.1% .125W TF TC0+-25	01172	BLU-1206 2K .1% 25PPM
R153	0699-2847	1	RESISTOR 2K +-0.1% .125W TF TC0+-25	01172	BLU-1206 2K .1% 25PPM
R154	0699-2847	1	RESISTOR 2K +-0.1% .125W TF TC0+-25	01172	BLU-1206 2K .1% 25PPM

 **Indicates factory-selected value*

Agilent Part Number E4401-60082
FM Demod (Option BAA)

Reference Designator	Agilent Part Number	Qty	Description	Mgr Code	Mfr Part Number
R155	0699-2847	1	RESISTOR 2K +-0.1% .125W TF TC0+-25	01172	BLU-1206 2K .1% 25PPM
R156	0699-2847	1	RESISTOR 2K +-0.1% .125W TF TC0+-25	01172	BLU-1206 2K .1% 25PPM
R157	0699-2847	1	RESISTOR 2K +-0.1% .125W TF TC0+-25	01172	BLU-1206 2K .1% 25PPM
R158	0699-2846	1	RESISTOR 5K +-0.1% .125W TF TC0+-25	02499	W1206R035001BT
R159	0699-2835	1	RESISTOR 500 +-0.1% .125W TF TC0+-25	02499	W1206R035000BT
R160	0699-2835	1	RESISTOR 500 +-0.1% .125W TF TC0+-25	02499	W1206R035000BT
R161	0699-2835	1	RESISTOR 500 +-0.1% .125W TF TC0+-25	02499	W1206R035000BT
R162	0699-2835	1	RESISTOR 500 +-0.1% .125W TF TC0+-25	02499	W1206R035000BT
R163	0699-2835	1	RESISTOR 500 +-0.1% .125W TF TC0+-25	02499	W1206R035000BT
R164	0699-2489	1	RESISTOR 10K +-0.1% .125W TF TC0+-25	01172	BLU-1206 10K .1% 25PPM
R165	0699-2489	1	RESISTOR 10K +-0.1% .125W TF TC0+-25	01172	BLU-1206 10K .1% 25PPM
R166	0699-1424	1	RESISTOR 237 +-1% .125W TKF TC0+-100	05524	CRCW12062370F
R167	0699-1423	1	RESISTOR 215 +-1% .125W TKF TC0+-100	05524	CRCW12062150F
R168	0699-1423	1	RESISTOR 215 +-1% .125W TKF TC0+-100	05524	CRCW12062150F
R169	0699-1424	1	RESISTOR 237 +-1% .125W TKF TC0+-100	05524	CRCW12062370F
R170	0699-1423	1	RESISTOR 215 +-1% .125W TKF TC0+-100	05524	CRCW12062150F
R171	0699-1424	1	RESISTOR 237 +-1% .125W TKF TC0+-100	05524	CRCW12062370F
R172	0699-1423	1	RESISTOR 215 +-1% .125W TKF TC0+-100	05524	CRCW12062150F
R178	1810-1578	1	NET-RES 4 1.0K OHM 8-PIN	00746	MNR34K5ABJ102
R179	1810-1578	1	NET-RES 4 1.0K OHM 8-PIN	00746	MNR34K5ABJ102
R180	0699-4016	1	RESISTOR 1M +-1% .063W TKF TC0+-200	00746	MCR03-F-1004
R181	0699-3947	1	RESISTOR 1K +-1% .063W TKF TC0+-200	00746	MCR03-F-1001
R182	0699-3943	1	RESISTOR 681 +-1% .063W TKF TC0+-200	00746	MCR03-F-6810
R183	0699-3940	1	RESISTOR 464 +-1% .063W TKF TC0+-200	09891	RK73H1J4640F
R184	0699-3940	1	RESISTOR 464 +-1% .063W TKF TC0+-200	09891	RK73H1J4640F
R185	0699-3924	1	RESISTOR 100 +-1% .063W TKF TC0+-200	00746	MCR03-F-1000
R194	0699-3924	1	RESISTOR 100 +-1% .063W TKF TC0+-200	00746	MCR03-F-1000

Agilent Part Number E4401-60082
FM Demod (Option BAA)

Reference Designator	Agilent Part Number	Qty	Description	Mgr Code	Mfr Part Number
R195	0699-3924	1	RESISTOR 100 +-1% .063W TKF TC0+-200	00746	MCR03-F-1000
R196	0699-3924	1	RESISTOR 100 +-1% .063W TKF TC0+-200	00746	MCR03-F-1000
R197	0699-3924	1	RESISTOR 100 +-1% .063W TKF TC0+-200	00746	MCR03-F-1000
R198	0699-3924	1	RESISTOR 100 +-1% .063W TKF TC0+-200	00746	MCR03-F-1000
R199	0699-3924	1	RESISTOR 100 +-1% .063W TKF TC0+-200	00746	MCR03-F-1000
R200	0699-3924	1	RESISTOR 100 +-1% .063W TKF TC0+-200	00746	MCR03-F-1000
R201	0699-3924	1	RESISTOR 100 +-1% .063W TKF TC0+-200	00746	MCR03-F-1000
R202	0699-3924	1	RESISTOR 100 +-1% .063W TKF TC0+-200	00746	MCR03-F-1000
R203	0699-3924	1	RESISTOR 100 +-1% .063W TKF TC0+-200	00746	MCR03-F-1000
R204	0699-3924	1	RESISTOR 100 +-1% .063W TKF TC0+-200	00746	MCR03-F-1000
R205	0699-3924	1	RESISTOR 100 +-1% .063W TKF TC0+-200	00746	MCR03-F-1000
R206	0699-3924	1	RESISTOR 100 +-1% .063W TKF TC0+-200	00746	MCR03-F-1000
R207	0699-3924	1	RESISTOR 100 +-1% .063W TKF TC0+-200	00746	MCR03-F-1000
R208	0699-3924	1	RESISTOR 100 +-1% .063W TKF TC0+-200	00746	MCR03-F-1000
R209	0699-3924	1	RESISTOR 100 +-1% .063W TKF TC0+-200	00746	MCR03-F-1000
R210	0699-3924	1	RESISTOR 100 +-1% .063W TKF TC0+-200	00746	MCR03-F-1000
R211	0699-3924	1	RESISTOR 100 +-1% .063W TKF TC0+-200	00746	MCR03-F-1000
R212	0699-3924	1	RESISTOR 100 +-1% .063W TKF TC0+-200	00746	MCR03-F-1000
R221	0699-3915	1	RESISTOR 38.3 +-1% .063W TKF TC0+-200	09891	RK73H1J38R3F
R222	0699-3955	1	RESISTOR 2.15K +-1% .063W TKF TC0+-200	09891	RK73H1J2151F
R223	0699-3935	1	RESISTOR 287 +-1% .063W TKF TC0+-200	00746	MCR03-F-2870
R224	0699-3574	1	RESISTOR 0 .0625W TKF	09891	RM73Z1JT
R225	0699-3941	1	RESISTOR 511 +-1% .063W TKF TC0+-200	00746	MCR03-F-5110
U1	1821-2639	1	IC-PLD FPGA UNPRGMD CMOS 4005	12404	XC4005E-4PQ160C
U3	1821-2804	1	IC-INTERFACE DCDR CMOS VIDEO	50844	BT829BKRF
U4	1821-3803	1	IC FIFO CMOS	00039	UPD485506G5-25
U5	1826-3000	1	IC AUDIO AMPL LOW-NOISE DUAL 8 PIN	03285	OP275GS
U6	1826-3000	1	IC AUDIO AMPL LOW-NOISE DUAL 8 PIN	03285	OP275GS
U7	1826-3000	1	IC AUDIO AMPL LOW-NOISE DUAL 8 PIN	03285	OP275GS
U8	1826-3000	1	IC AUDIO AMPL LOW-NOISE DUAL 8 PIN	03285	OP275GS

 **Indicates factory-selected value*

Agilent Part Number E4401-60082
FM Demod (Option BAA)

Reference Designator	Agilent Part Number	Qty	Description	Mgr Code	Mfr Part Number
U9	1826-3000	1	IC AUDIO AMPL LOW-NOISE DUAL 8 PIN	03285	OP275GS
U13	1826-2786	1	IC OP AMP VID-SPCL-FCTN SINGLE 8 PIN	03285	AD810AR
U14	1826-2786	1	IC OP AMP VID-SPCL-FCTN SINGLE 8 PIN	03285	AD810AR
U15	1826-2786	1	IC OP AMP VID-SPCL-FCTN SINGLE 8 PIN	03285	AD810AR
U19	1826-2211	1	IC RF/IF AMPL SINGLE 8 PIN PLSTC-SOIC	28480	1826-2211
U20	1826-2211	1	IC RF/IF AMPL SINGLE 8 PIN PLSTC-SOIC	28480	1826-2211
U22	1826-2167	1	ANALOG MULTIPLEXER 8 CHNL 16-SOIC	05524	DG409DY
U24	1826-2167	1	ANALOG MULTIPLEXER 8 CHNL 16-SOIC	05524	DG409DY
U26	1826-2145	1	ANALOG SWITCH 4 SPST 16 -P-SOIC	05524	DG413DY
U28	1826-2145	1	ANALOG SWITCH 4 SPST 16 -P-SOIC	05524	DG413DY
U29	1826-2021	1	IC MISC SINGLE 8 PIN PLSTC-SOIC	03406	LM1881M
U31	1826-1931	1	IC OSC DBL-BAL SINGLE 8 PIN PLSTC-SOIC	02910	SA602AD
U32	1826-1899	1	D/A 12-BIT 28-PLCC CMOS	03285	AD7547JP
U33	1826-1838	1	IC PWR MGT-V-REF-FXD 4.95/5.05V 8 PINS	10858	LT1021DCS8-5
U34	1821-0662	1	IC DRVR BICMOS/ABT CLK	01698	CDC328AD
U35	1821-0457	1	IC FF BICMOS/ABT D-TYPE POS-EDGE-TRIG	02910	74ABT821D
U36	1821-0457	1	IC FF BICMOS/ABT D-TYPE POS-EDGE-TRIG	02910	74ABT821D
U37	1820-6391	1	IC GATE CMOS/AC EXCL-OR QUAD 2-INP	02237	74AC86SCX.
U38	1820-6391	1	IC GATE CMOS/AC EXCL-OR QUAD 2-INP	02237	74AC86SCX.
U40	1820-6129	1	IC SHF-RGTR CMOS/HC SYNC/ASYNC SERIAL-IN	01698	SN74HC164D
U41	1820-6129	1	IC SHF-RGTR CMOS/HC SYNC/ASYNC SERIAL-IN	01698	SN74HC164D
U42	1820-5937	1	IC FF CMOS/AC D-TYPE POS-EDGE-TRIG	02237	74AC74SC.
U44	E4401-50005	1		28480	E4401-50005
U45	E4401-50005	1		28480	E4401-50005
U47	1813-0712	1	CLK-OSC-XTAL STD 50.0-MHZ 0.01%	12768	SG-615PH 50.000MC
U48	1826-2145	1	ANALOG SWITCH 4 SPST 16 -P-SOIC	05524	DG413DY
U49	1826-1985	1	ANALOG SWITCH 4 SPST 16 -P-SOIC	05524	DG411DY
U50	1826-1985	1	ANALOG SWITCH 4 SPST 16 -P-SOIC	05524	DG411DY

**Indicates factory-selected value*

Agilent Part Number E4401-60082
FM Demod (Option BAA)

Reference Designator	Agilent Part Number	Qty	Description	Mgr Code	Mfr Part Number
U51	E1780-80001	1	SER CONF PROM	28480	E1780-80001
U52	E4401-80078	1	PGMD HDR U52	28480	E4401-80078
U53	1826-2985	1	IC OP AMP HS DUAL 8 PIN PLSTC-SOIC	03285	AD826AR
XU51	1200-1590	1	SOCKET-IC-PLCC 20-CONT SQUARE J-LEAD	01380	3-822499-3
Y1	0410-4360	1	CRYSTAL-QUARTZ 35.46895 MHZ HC-49/U-HLDR	05016	MM49X3C3A-35.46895MHZ
Y2	0410-4361	1	CRYSTAL-QUARTZ 28.63636 MHZ HC-49/U-HLDR	05016	MM49X3C3A-28.63636MHZ
Y3	0410-2134	1	CRYSTAL-QUARTZ 18.432	09620	0410-2134

 **Indicates factory-selected value*

5300		D-E4401-60082-2	
SYM	REVISIONS	APPROVED	DATE
A	AS ISSUED LCN 53-E4401-294 /RS		
B	PER ECO 53-13352 /STS		

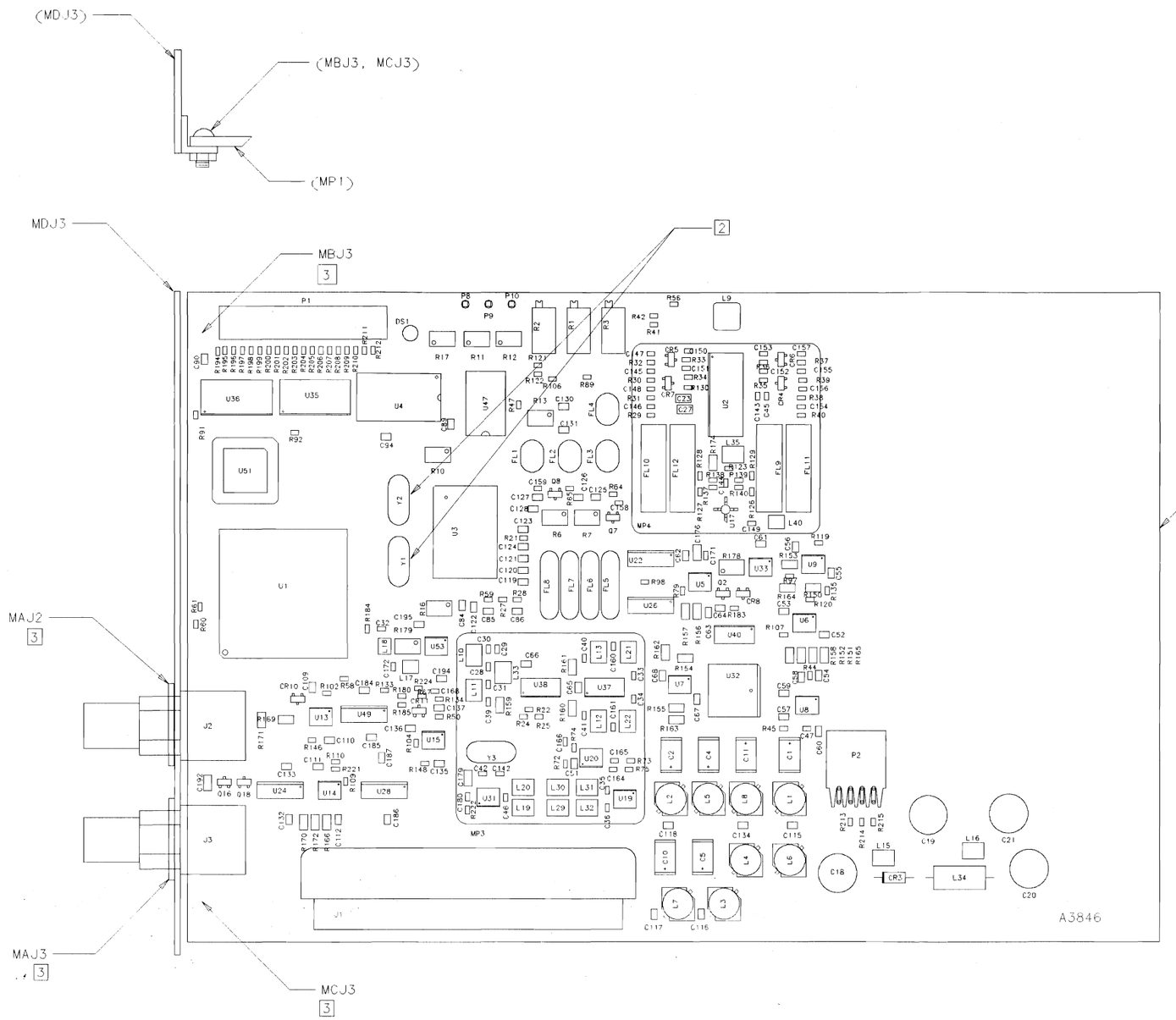

TOP SIDE
SEE MATERIAL LIST E4401-60082

NOTES UNLESS OTHERWISE SPECIFIED:
1 USE RAW BOARD E4401-20082
2 Y1 AND Y2 SET .010-.050 ABOVE BOARD, ADD APPROVED RTV ADHESIVE UNDER PART AFTER SOLDERING.
■ TORQUE BNC NUTS (MAJ2 & MAJ3) TO 20 IN-LBS PRIOR TO TORQUEING SCREWS (MCJ3 & MBJ3) TO 5.0 IN-LBS.

HP PROPRIETARY
THIS DOCUMENT CONTAINS CONFIDENTIAL, PROPRIETARY INFORMATION THAT IS HEWLETT-PACKARD (HP) PROPERTY. DO NOT DISCLOSE TO OR DUPLICATE FOR OTHERS EXCEPT AS AUTHORIZED BY HP

UNLESS OTHERWISE SPECIFIED, DIMENSIONS ARE IN INCHES.
TOLERANCES: XX.XXX .010, XX.XX .02
THIRD ANGLE PROJECTION
DO NOT SCALE THIS DRAWING

DRAWN BY — DATE
ENGINEER/CHECKER — DATE
RELEASE TO PROD. — DATE
SUPERSEDES DWG.

TITLE: ASSEMBLY, PWB CALVGA

MENTOR FILENAME
SCALE: NONE
SHEET 1 OF 2
PART NUMBER: E4401-60082
D-E4401-60082-2

HEWLETT PACKARD

5300 D-E4401-60082-2

SYM	REVISIONS	APPROVED	DATE
A	AS ISSUED, LCN 53-E4401-294 /RS		

BARCODE LABEL

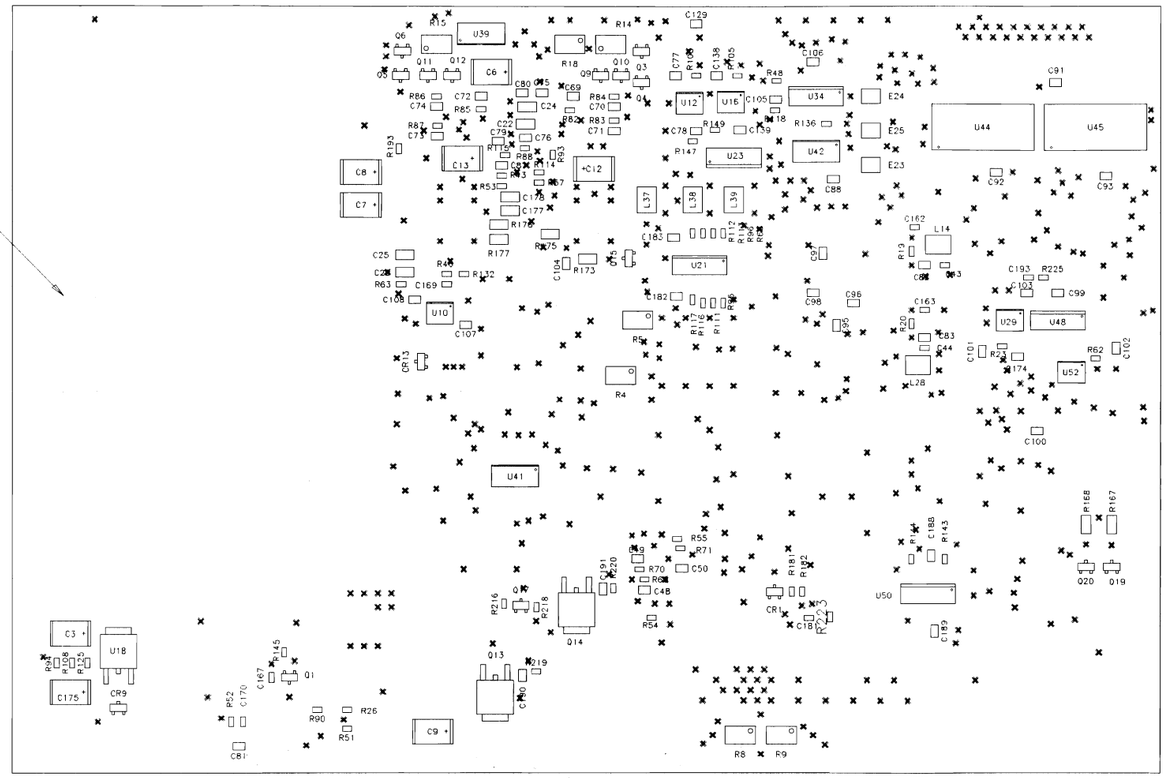

BOTTOM SIDE

HP PROPRIETARY
THIS DOCUMENT CONTAINS CONFIDENTIAL, PROPRIETARY INFORMATION THAT IS HEWLETT-PACKARD (HP'S) PROPERTY. DO NOT DISCLOSE TO OR DUPLICATE FOR OTHERS EXCEPT AS AUTHORIZED BY HP

UNLESS OTHERWISE SPECIFIED, DIMENSIONS ARE IN INCHES.
TOLERANCES: XX.XXX .010
XX.XX .02
THIRD ANGLE PROJECTION
DO NOT SCALE THIS DRAWING

DRAWN BY | DATE
ENGINEER/CHECKER | DATE
RELEASE TO PROD. | DATE
SUPERSEDES DWG

ASSEMBLY, PWB
CALVGA
TITLE

MENTOR FILENAME
SCALE NONE
SHEET 2 OF 2
E4401-60082
PART NUMBER
D-E4401-60082-2

HEWLETT PACKARD

D-E4401-60082-1

REV	INFORMATION	APPROVED	DATE
A	AS ISSUED, LCN 53-E4401-294 /RS		

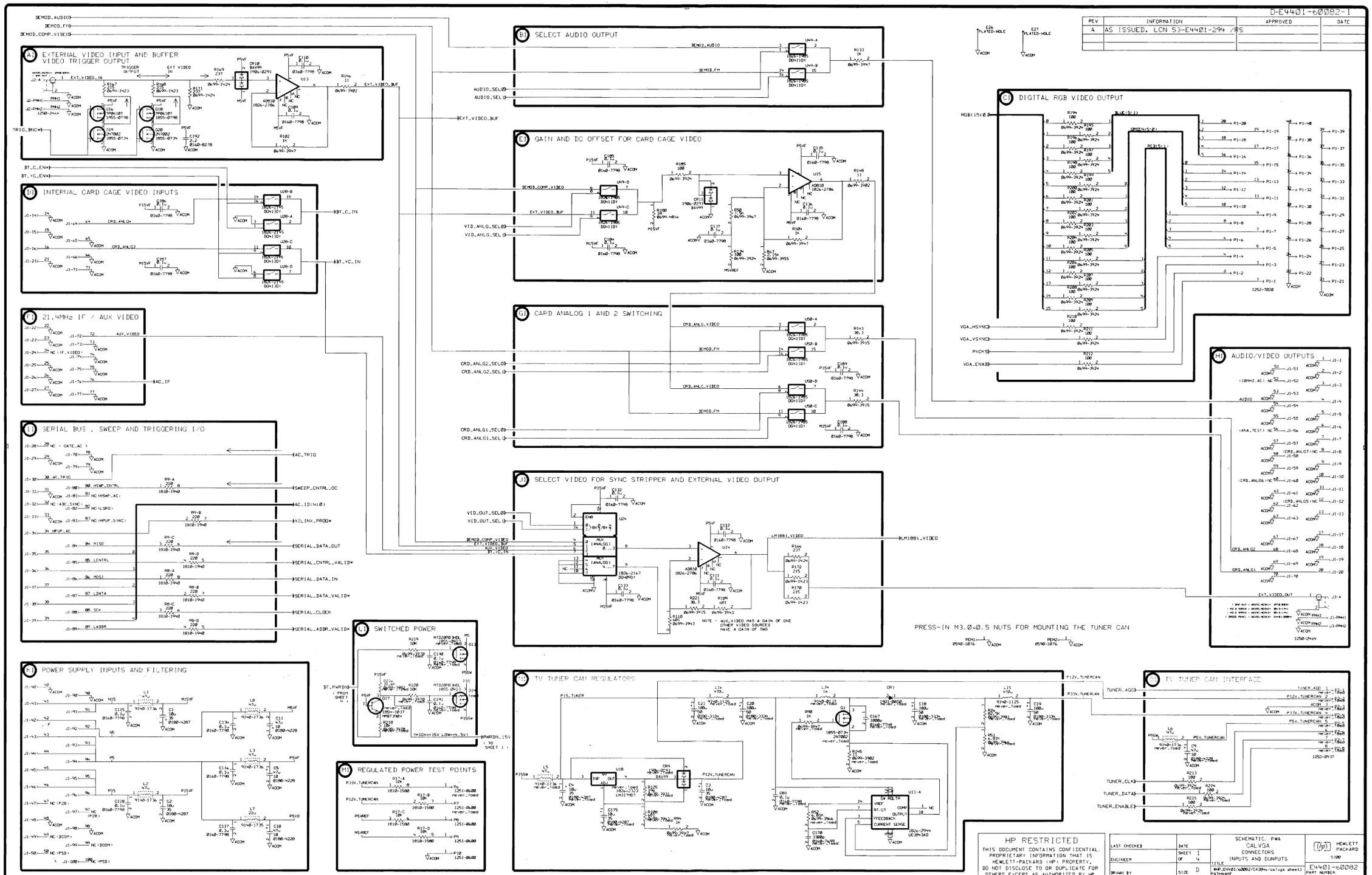

HP RESTRICTED

THIS DOCUMENT CONTAINS CONFIDENTIAL, PROPRIETARY INFORMATION THAT IS HEWLETT-PACKARD (HP) PROPERTY. DO NOT DISCLOSE TO OR DUPLICATE FOR OTHERS EXCEPT AS AUTHORIZED BY HP.

LAST CHECKED	DATE	SCHEMATIC, PWA CALVGA CONNECTORS INPUTS AND DUNPUTS	HEWLETT PACKARD 5300
ENGINEER	SHEET 1 OF 4	TITLE	
DRAWN BY	SIZE D	PATHNAME ~HP_EVW01/60082/CA3846/calvga sheet1	E4401-60082 PART NUMBER
	CA3846 ASSY. REV.	A3846 SCH. REV. 1 PAGE 4 OF	D-E4401-60082-1 DWG. NO.

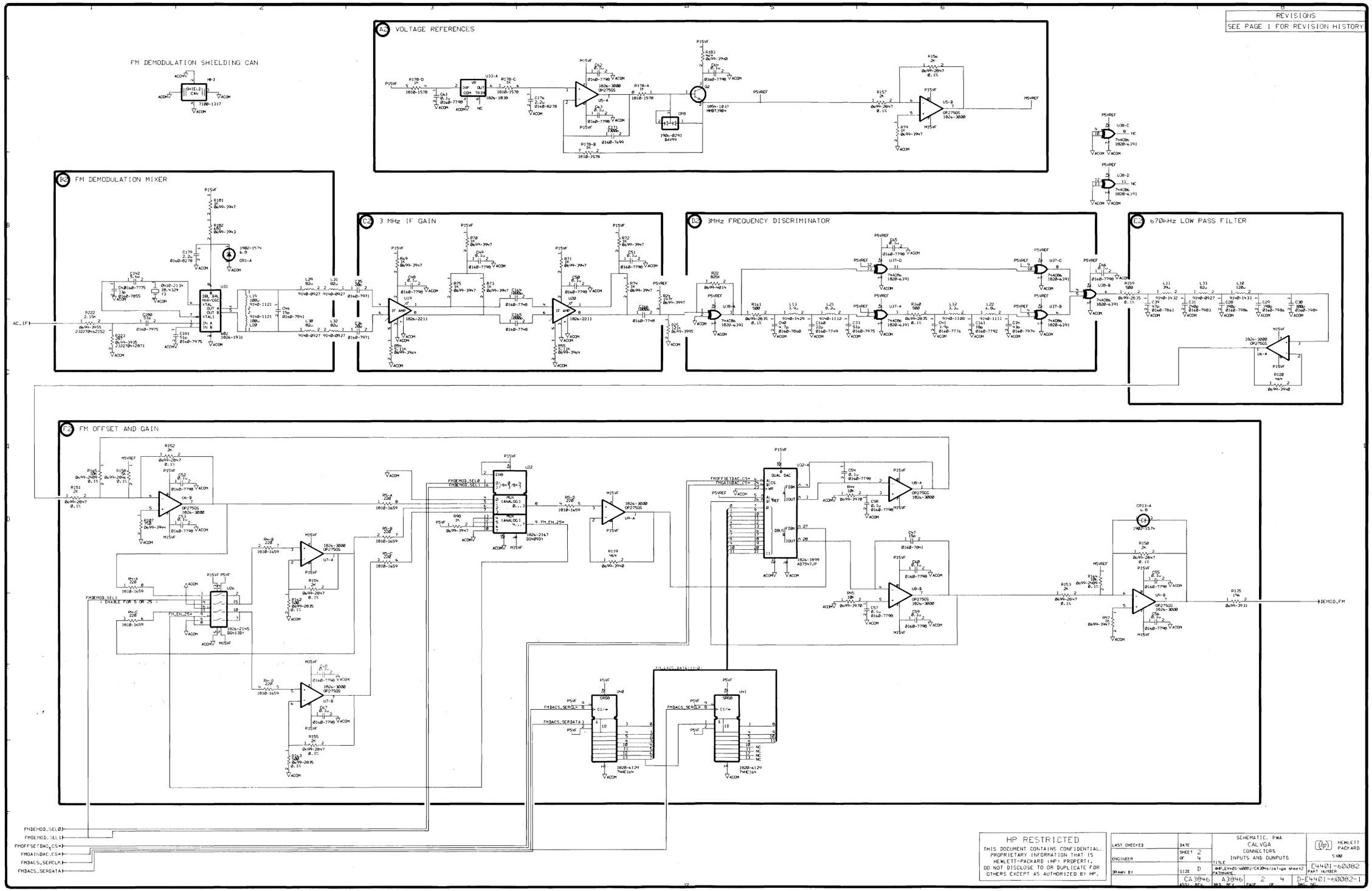
REVISIONS
SEE PAGE 1 FOR REVISION HISTORY
FM DEMODULATION SHIELDING CAN
A2 VOLTAGE REFERENCES
B2 FM DEMODULATION MIXER
C2 3 MHz IF GAIN
D2 3MHz FREQUENCY DISCRIMINATOR
E2 670kHz LOW PASS FILTER
F2 FM OFFSET AND GAIN
AC_IF
DEMOD_FM
FMDEMOD_SELO
FMDEMOD_SELI
FMOFFSETDAC_CS*
FMGAINDAC_CS*
FMDACS_SERCLK
FMDACS_SERDATA
HP RESTRICTED
THIS DOCUMENT CONTAINS CONFIDENTIAL, PROPRIETARY INFORMATION THAT IS HEWLETT-PACKARD (HP) PROPERTY. DO NOT DISCLOSE TO OR DUPLICATE FOR OTHERS EXCEPT AS AUTHORIZED BY HP.
LAST CHECKED
ENGINEER
DRAWN BY
DATE
SHEET 2 OF 4
SIZE D
SCHEMATIC, PWA
CALVGA
CONNECTORS
INPUTS AND OUNPUTS
HEWLETT PACKARD
5180
E4401-60082
PART NUMBER
D-E4401-60082-1
CA3846
A3846
2
4

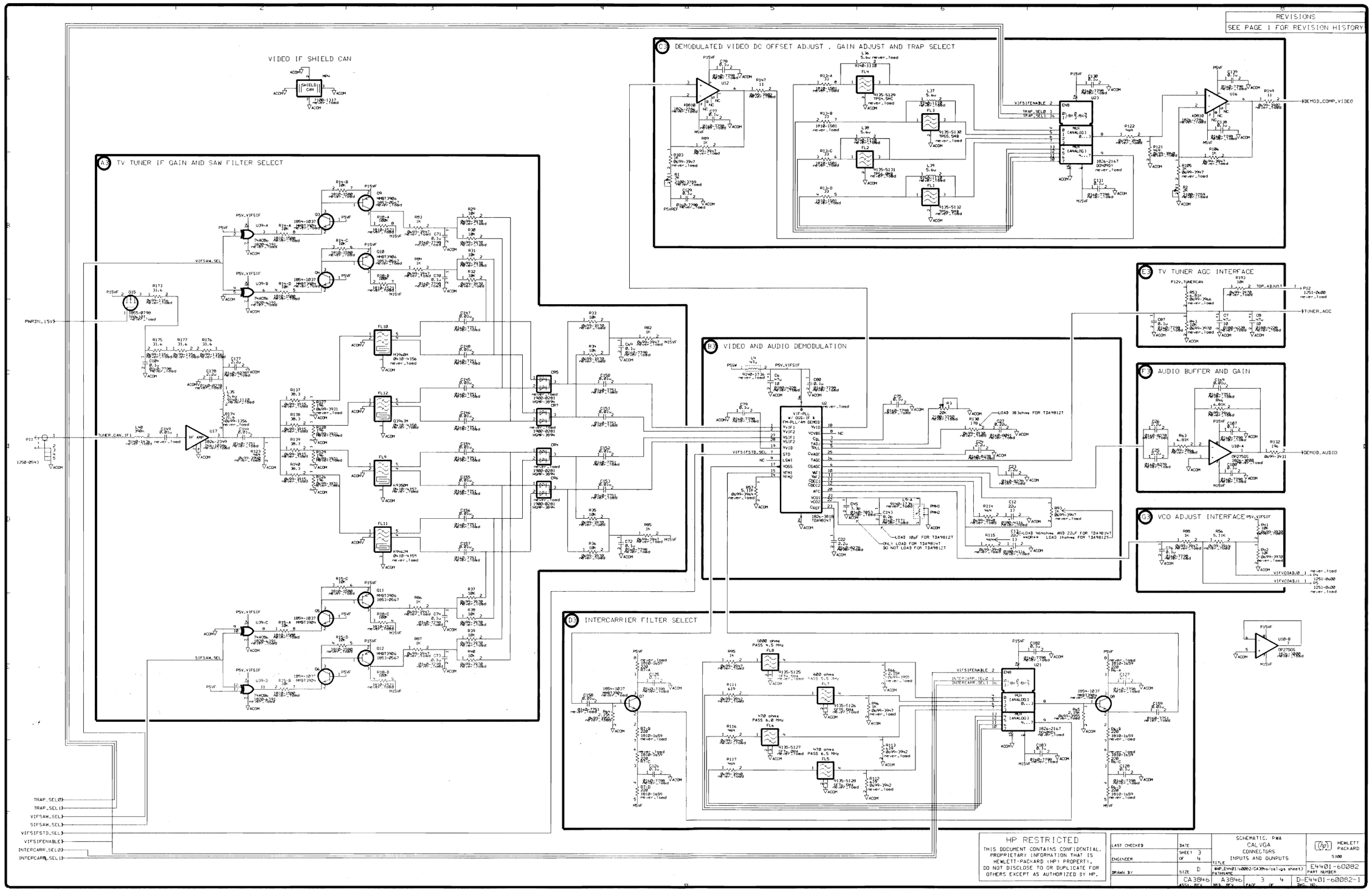
REVISIONS
SEE PAGE 1 FOR REVISION HISTORY
VIDEO IF SHIELD CAN
A2 TV TUNER IF GAIN AND SAW FILTER SELECT
B2 VIDEO AND AUDIO DEMODULATION
C2 DEMODULATED VIDEO DC OFFSET ADJUST , GAIN ADJUST AND TRAP SELECT
D3 INTERCARRIER FILTER SELECT
E3 TV TUNER AGC INTERFACE
F3 AUDIO BUFFER AND GAIN
G3 VCO ADJUST INTERFACE
DEMOD_COMP_VIDEO
DEMOD_AUDIO
TUNER_AGC
TUNER_CAN_IF1
PWRON_15V
VIFSAW_SEL
SIFSAW_SEL
TRAP_SEL0
TRAP_SEL1
VIFSAW_SEL
SIFSAW_SEL
VIFSIFSTD_SEL
VIFSIFENABLE
INTERCARR_SEL0
INTERCARR_SEL1
HP RESTRICTED
THIS DOCUMENT CONTAINS CONFIDENTIAL, PROPRIETARY INFORMATION THAT IS HEWLETT-PACKARD (HP) PROPERTY. DO NOT DISCLOSE TO OR DUPLICATE FOR OTHERS EXCEPT AS AUTHORIZED BY HP.
LAST CHECKED
ENGINEER
DRAWN BY
DATE
SHEET 3 OF 4
SIZE D
SCHEMATIC, PWA
CAL VGA
CONNECTORS
INPUTS AND DUNPUTS
TITLE
PATHNAME
CA3B46
A3B46
3 OF 4
HEWLETT PACKARD
5100
E4401-60082
PART NUMBER
D-E4401-60082-1
DWG. NO.

4 TIMES Fsc YUV CLOCKS : 14.31818 MHz FOR NTSC. 17.734475 MHz FOR PAL/SECAM

REVISIONS
SEE PAGE 1 FOR REVISION HISTORY

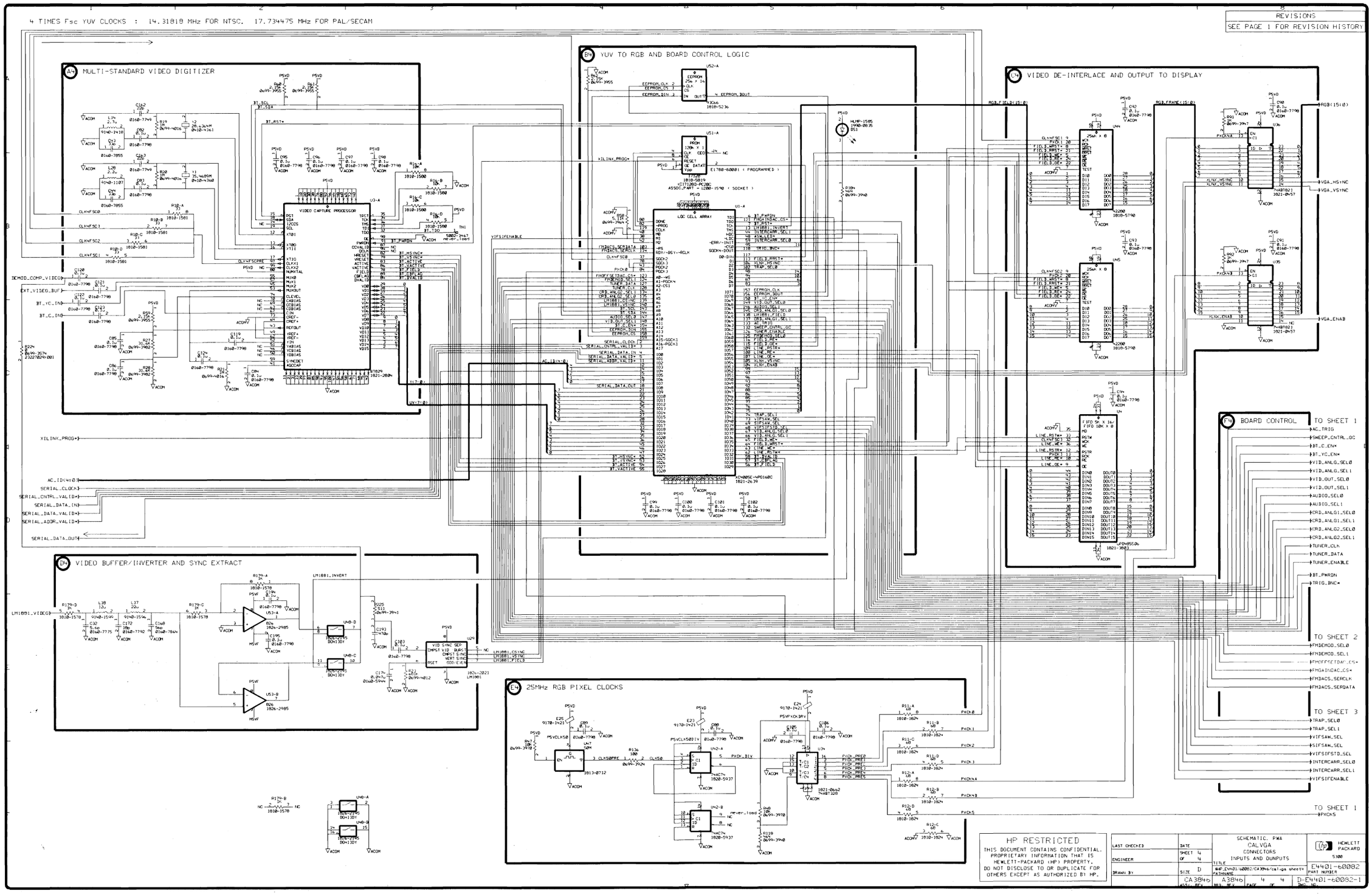

HP RESTRICTED
THIS DOCUMENT CONTAINS CONFIDENTIAL, PROPRIETARY INFORMATION THAT IS HEWLETT-PACKARD (HP) PROPERTY. DO NOT DISCLOSE TO OR DUPLICATE FOR OTHERS EXCEPT AS AUTHORIZED BY HP.

LAST CHECKED	DATE	SCHEMATIC, PWA CALVGA CONNECTORS INPUTS AND OUNPUTS	HEWLETT PACKARD 5300
ENGINEER	SHEET 4 OF 4	TITLE 64P_DVI01-60082/CA3846/calvga sheet4 PATHNAME	E4401-60082 PART NUMBER
DRAWN BY	SIZE D	CA3846 A3846	4 4 D-E4401-60082-1
		ASSY REV / MBD REV	PAGE OF DWG NO.

Component-Level Information Packet for E4401-60088

Digital Demod DSP

Agilent Technologies

Agilent Part Number: E4401-90214
Printed in Malaysia April 2001

Notice

The information contained in this document is subject to change without notice. Agilent Technologies makes no warranty of any kind with regard to this material, including but not limited to, the implied warranties of merchantability and fitness for a particular purpose. Agilent Technologies shall not be liable for errors contained herein or for incidental or consequential damages in connection with the furnishing, performance, or use of this material.

© Copyright Agilent Technologies Inc. 2000, 2001
All Rights Reserved. Reproduction, adaptation, or translation without prior written permission is prohibited, except as allowed under the copyright laws.

Agilent Part Number E4401-60088
Digital Demod DSP

Reference Designator	Agilent Part Number	Qty	Description	Mgr Code	Mfr Part Number
C1	0180-4287	1	CAP-FXD 10uF +-20% 35 V TA	02010	TAJD106M035
C2	0160-7798	1	CAP-FXD 0.1uF +-10% 50 V CER X7R	06352	C2012X7R1H104K
C3	0180-4287	1	CAP-FXD 10uF +-20% 35 V TA	02010	TAJD106M035
C4	0160-7798	1	CAP-FXD 0.1uF +-10% 50 V CER X7R	06352	C2012X7R1H104K
C5	0160-7798	1	CAP-FXD 0.1uF +-10% 50 V CER X7R	06352	C2012X7R1H104K
C6	0160-7798	1	CAP-FXD 0.1uF +-10% 50 V CER X7R	06352	C2012X7R1H104K
C7	0160-7798	1	CAP-FXD 0.1uF +-10% 50 V CER X7R	06352	C2012X7R1H104K
C8	0160-7798	1	CAP-FXD 0.1uF +-10% 50 V CER X7R	06352	C2012X7R1H104K
C15	0180-4287	1	CAP-FXD 10uF +-20% 35 V TA	02010	TAJD106M035
C16	0180-4558	1	CAP-FXD 33uF +-20% 20 V TA	12340	T491D336M020AS
C18	0160-7798	1	CAP-FXD 0.1uF +-10% 50 V CER X7R	06352	C2012X7R1H104K
C19	0160-7798	1	CAP-FXD 0.1uF +-10% 50 V CER X7R	06352	C2012X7R1H104K
C102	0180-4558	1	CAP-FXD 33uF +-20% 20 V TA	12340	T491D336M020AS
C104	0180-4558	1	CAP-FXD 33uF +-20% 20 V TA	12340	T491D336M020AS
C105	0180-4558	1	CAP-FXD 33uF +-20% 20 V TA	12340	T491D336M020AS
C106	0180-4558	1	CAP-FXD 33uF +-20% 20 V TA	12340	T491D336M020AS
C107	0180-4558	1	CAP-FXD 33uF +-20% 20 V TA	12340	T491D336M020AS
C108	0160-7798	1	CAP-FXD 0.1uF +-10% 50 V CER X7R	06352	C2012X7R1H104K
C109	0160-7798	1	CAP-FXD 0.1uF +-10% 50 V CER X7R	06352	C2012X7R1H104K
C110	0160-7798	1	CAP-FXD 0.1uF +-10% 50 V CER X7R	06352	C2012X7R1H104K
C111	0160-7798	1	CAP-FXD 0.1uF +-10% 50 V CER X7R	06352	C2012X7R1H104K
C112	0160-7798	1	CAP-FXD 0.1uF +-10% 50 V CER X7R	06352	C2012X7R1H104K
C113	0160-7798	1	CAP-FXD 0.1uF +-10% 50 V CER X7R	06352	C2012X7R1H104K
C114	0160-7798	1	CAP-FXD 0.1uF +-10% 50 V CER X7R	06352	C2012X7R1H104K
C115	0160-7798	1	CAP-FXD 0.1uF +-10% 50 V CER X7R	06352	C2012X7R1H104K
C116	0160-7798	1	CAP-FXD 0.1uF +-10% 50 V CER X7R	06352	C2012X7R1H104K
C117	0160-7798	1	CAP-FXD 0.1uF +-10% 50 V CER X7R	06352	C2012X7R1H104K
C118	0160-7798	1	CAP-FXD 0.1uF +-10% 50 V CER X7R	06352	C2012X7R1H104K

Agilent Part Number E4401-60088
Digital Demod DSP

Reference Designator	Agilent Part Number	Qty	Description	Mgr Code	Mfr Part Number
C119	0160-7798	1	CAP-FXD 0.1uF +-10% 50 V CER X7R	06352	C2012X7R1H104K
C120	0160-7798	1	CAP-FXD 0.1uF +-10% 50 V CER X7R	06352	C2012X7R1H104K
C121	0160-7798	1	CAP-FXD 0.1uF +-10% 50 V CER X7R	06352	C2012X7R1H104K
C122	0160-7798	1	CAP-FXD 0.1uF +-10% 50 V CER X7R	06352	C2012X7R1H104K
C123	0160-7798	1	CAP-FXD 0.1uF +-10% 50 V CER X7R	06352	C2012X7R1H104K
C124	0160-7798	1	CAP-FXD 0.1uF +-10% 50 V CER X7R	06352	C2012X7R1H104K
C125	0160-7798	1	CAP-FXD 0.1uF +-10% 50 V CER X7R	06352	C2012X7R1H104K
C126	0160-7798	1	CAP-FXD 0.1uF +-10% 50 V CER X7R	06352	C2012X7R1H104K
C127	0160-7798	1	CAP-FXD 0.1uF +-10% 50 V CER X7R	06352	C2012X7R1H104K
C128	0160-7798	1	CAP-FXD 0.1uF +-10% 50 V CER X7R	06352	C2012X7R1H104K
C129	0160-7798	1	CAP-FXD 0.1uF +-10% 50 V CER X7R	06352	C2012X7R1H104K
C130	0160-7798	1	CAP-FXD 0.1uF +-10% 50 V CER X7R	06352	C2012X7R1H104K
C131	0160-7798	1	CAP-FXD 0.1uF +-10% 50 V CER X7R	06352	C2012X7R1H104K
C132	0160-7798	1	CAP-FXD 0.1uF +-10% 50 V CER X7R	06352	C2012X7R1H104K
C133	0160-7798	1	CAP-FXD 0.1uF +-10% 50 V CER X7R	06352	C2012X7R1H104K
C134	0160-7798	1	CAP-FXD 0.1uF +-10% 50 V CER X7R	06352	C2012X7R1H104K
C135	0160-7798	1	CAP-FXD 0.1uF +-10% 50 V CER X7R	06352	C2012X7R1H104K
C136	0160-7798	1	CAP-FXD 0.1uF +-10% 50 V CER X7R	06352	C2012X7R1H104K
C137	0160-7798	1	CAP-FXD 0.1uF +-10% 50 V CER X7R	06352	C2012X7R1H104K
C138	0160-7798	1	CAP-FXD 0.1uF +-10% 50 V CER X7R	06352	C2012X7R1H104K
C139	0160-7798	1	CAP-FXD 0.1uF +-10% 50 V CER X7R	06352	C2012X7R1H104K
C140	0160-7798	1	CAP-FXD 0.1uF +-10% 50 V CER X7R	06352	C2012X7R1H104K
C141	0160-7798	1	CAP-FXD 0.1uF +-10% 50 V CER X7R	06352	C2012X7R1H104K
C142	0160-7798	1	CAP-FXD 0.1uF +-10% 50 V CER X7R	06352	C2012X7R1H104K
C143	0160-7798	1	CAP-FXD 0.1uF +-10% 50 V CER X7R	06352	C2012X7R1H104K
C144	0160-7798	1	CAP-FXD 0.1uF +-10% 50 V CER X7R	06352	C2012X7R1H104K
C145	0160-7798	1	CAP-FXD 0.1uF +-10% 50 V CER X7R	06352	C2012X7R1H104K
C146	0160-7798	1	CAP-FXD 0.1uF +-10% 50 V CER X7R	06352	C2012X7R1H104K
C147	0160-7798	1	CAP-FXD 0.1uF +-10% 50 V CER X7R	06352	C2012X7R1H104K
C148	0160-7798	1	CAP-FXD 0.1uF +-10% 50 V CER X7R	06352	C2012X7R1H104K

 **Indicates factory-selected value*

Agilent Part Number E4401-60088
Digital Demod DSP

Reference Designator	Agilent Part Number	Qty	Description	Mgr Code	Mfr Part Number
C149	0160-7798	1	CAP-FXD 0.1uF +-10% 50 V CER X7R	06352	C2012X7R1H104K
C150	0160-7798	1	CAP-FXD 0.1uF +-10% 50 V CER X7R	06352	C2012X7R1H104K
C151	0160-7798	1	CAP-FXD 0.1uF +-10% 50 V CER X7R	06352	C2012X7R1H104K
C152	0160-7798	1	CAP-FXD 0.1uF +-10% 50 V CER X7R	06352	C2012X7R1H104K
C153	0160-7798	1	CAP-FXD 0.1uF +-10% 50 V CER X7R	06352	C2012X7R1H104K
C154	0160-7798	1	CAP-FXD 0.1uF +-10% 50 V CER X7R	06352	C2012X7R1H104K
C155	0160-7798	1	CAP-FXD 0.1uF +-10% 50 V CER X7R	06352	C2012X7R1H104K
C156	0160-7798	1	CAP-FXD 0.1uF +-10% 50 V CER X7R	06352	C2012X7R1H104K
C157	0160-7798	1	CAP-FXD 0.1uF +-10% 50 V CER X7R	06352	C2012X7R1H104K
C158	0160-7798	1	CAP-FXD 0.1uF +-10% 50 V CER X7R	06352	C2012X7R1H104K
C161	0160-7798	1	CAP-FXD 0.1uF +-10% 50 V CER X7R	06352	C2012X7R1H104K
C162	0160-7798	1	CAP-FXD 0.1uF +-10% 50 V CER X7R	06352	C2012X7R1H104K
C165	0160-7798	1	CAP-FXD 0.1uF +-10% 50 V CER X7R	06352	C2012X7R1H104K
C166	0160-7798	1	CAP-FXD 0.1uF +-10% 50 V CER X7R	06352	C2012X7R1H104K
C167	0160-7798	1	CAP-FXD 0.1uF +-10% 50 V CER X7R	06352	C2012X7R1H104K
C168	0160-7798	1	CAP-FXD 0.1uF +-10% 50 V CER X7R	06352	C2012X7R1H104K
C169	0160-7798	1	CAP-FXD 0.1uF +-10% 50 V CER X7R	06352	C2012X7R1H104K
C170	0160-7798	1	CAP-FXD 0.1uF +-10% 50 V CER X7R	06352	C2012X7R1H104K
C171	0160-7798	1	CAP-FXD 0.1uF +-10% 50 V CER X7R	06352	C2012X7R1H104K
C172	0160-7798	1	CAP-FXD 0.1uF +-10% 50 V CER X7R	06352	C2012X7R1H104K
C173	0160-7798	1	CAP-FXD 0.1uF +-10% 50 V CER X7R	06352	C2012X7R1H104K
C174	0160-7798	1	CAP-FXD 0.1uF +-10% 50 V CER X7R	06352	C2012X7R1H104K
C175	0160-7798	1	CAP-FXD 0.1uF +-10% 50 V CER X7R	06352	C2012X7R1H104K
C176	0160-7798	1	CAP-FXD 0.1uF +-10% 50 V CER X7R	06352	C2012X7R1H104K
C177	0160-7798	1	CAP-FXD 0.1uF +-10% 50 V CER X7R	06352	C2012X7R1H104K
C178	0160-7798	1	CAP-FXD 0.1uF +-10% 50 V CER X7R	06352	C2012X7R1H104K
C179	0160-7798	1	CAP-FXD 0.1uF +-10% 50 V CER X7R	06352	C2012X7R1H104K
C180	0160-7798	1	CAP-FXD 0.1uF +-10% 50 V CER X7R	06352	C2012X7R1H104K
C181	0160-7798	1	CAP-FXD 0.1uF +-10% 50 V CER X7R	06352	C2012X7R1H104K
C182	0160-7798	1	CAP-FXD 0.1uF +-10% 50 V CER X7R	06352	C2012X7R1H104K

Agilent Part Number E4401-60088
Digital Demod DSP

Reference Designator	Agilent Part Number	Qty	Description	Mgr Code	Mfr Part Number
C183	0160-7798	1	CAP-FXD 0.1uF +-10% 50 V CER X7R	06352	C2012X7R1H104K
C184	0160-7798	1	CAP-FXD 0.1uF +-10% 50 V CER X7R	06352	C2012X7R1H104K
C185	0160-7798	1	CAP-FXD 0.1uF +-10% 50 V CER X7R	06352	C2012X7R1H104K
C186	0160-7798	1	CAP-FXD 0.1uF +-10% 50 V CER X7R	06352	C2012X7R1H104K
C187	0160-7798	1	CAP-FXD 0.1uF +-10% 50 V CER X7R	06352	C2012X7R1H104K
C188	0160-7798	1	CAP-FXD 0.1uF +-10% 50 V CER X7R	06352	C2012X7R1H104K
C189	0160-7798	1	CAP-FXD 0.1uF +-10% 50 V CER X7R	06352	C2012X7R1H104K
C190	0160-7798	1	CAP-FXD 0.1uF +-10% 50 V CER X7R	06352	C2012X7R1H104K
C191	0160-7798	1	CAP-FXD 0.1uF +-10% 50 V CER X7R	06352	C2012X7R1H104K
C192	0160-7798	1	CAP-FXD 0.1uF +-10% 50 V CER X7R	06352	C2012X7R1H104K
C193	0160-7798	1	CAP-FXD 0.1uF +-10% 50 V CER X7R	06352	C2012X7R1H104K
C194	0160-7798	1	CAP-FXD 0.1uF +-10% 50 V CER X7R	06352	C2012X7R1H104K
C195	0160-7798	1	CAP-FXD 0.1uF +-10% 50 V CER X7R	06352	C2012X7R1H104K
C196	0160-7798	1	CAP-FXD 0.1uF +-10% 50 V CER X7R	06352	C2012X7R1H104K
C197	0160-7798	1	CAP-FXD 0.1uF +-10% 50 V CER X7R	06352	C2012X7R1H104K
C198	0160-7798	1	CAP-FXD 0.1uF +-10% 50 V CER X7R	06352	C2012X7R1H104K
C199	0160-7798	1	CAP-FXD 0.1uF +-10% 50 V CER X7R	06352	C2012X7R1H104K
C200	0160-7798	1	CAP-FXD 0.1uF +-10% 50 V CER X7R	06352	C2012X7R1H104K
C201	0160-7798	1	CAP-FXD 0.1uF +-10% 50 V CER X7R	06352	C2012X7R1H104K
C202	0160-7798	1	CAP-FXD 0.1uF +-10% 50 V CER X7R	06352	C2012X7R1H104K
C203	0160-7798	1	CAP-FXD 0.1uF +-10% 50 V CER X7R	06352	C2012X7R1H104K
C204	0160-7798	1	CAP-FXD 0.1uF +-10% 50 V CER X7R	06352	C2012X7R1H104K
C205	0160-7798	1	CAP-FXD 0.1uF +-10% 50 V CER X7R	06352	C2012X7R1H104K
C206	0160-7798	1	CAP-FXD 0.1uF +-10% 50 V CER X7R	06352	C2012X7R1H104K
C207	0160-7798	1	CAP-FXD 0.1uF +-10% 50 V CER X7R	06352	C2012X7R1H104K
C208	0160-7798	1	CAP-FXD 0.1uF +-10% 50 V CER X7R	06352	C2012X7R1H104K
C209	0160-7798	1	CAP-FXD 0.1uF +-10% 50 V CER X7R	06352	C2012X7R1H104K
C210	0160-7798	1	CAP-FXD 0.1uF +-10% 50 V CER X7R	06352	C2012X7R1H104K
C211	0160-7798	1	CAP-FXD 0.1uF +-10% 50 V CER X7R	06352	C2012X7R1H104K
C212	0160-7798	1	CAP-FXD 0.1uF +-10% 50 V CER X7R	06352	C2012X7R1H104K

 **Indicates factory-selected value*

Agilent Part Number E4401-60088
Digital Demod DSP

Reference Designator	Agilent Part Number	Qty	Description	Mgr Code	Mfr Part Number
C213	0160-7798	1	CAP-FXD 0.1uF +-10% 50 V CER X7R	06352	C2012X7R1H104K
C214	0160-7798	1	CAP-FXD 0.1uF +-10% 50 V CER X7R	06352	C2012X7R1H104K
C215	0160-7798	1	CAP-FXD 0.1uF +-10% 50 V CER X7R	06352	C2012X7R1H104K
C226	0160-7798	1	CAP-FXD 0.1uF +-10% 50 V CER X7R	06352	C2012X7R1H104K
C227	0160-7798	1	CAP-FXD 0.1uF +-10% 50 V CER X7R	06352	C2012X7R1H104K
C228	0160-7798	1	CAP-FXD 0.1uF +-10% 50 V CER X7R	06352	C2012X7R1H104K
C229	0160-7751	1	CAP-FXD 0.01uF +-10% 50 V CER X7R	02010	06035C103KAT
C230	0160-7751	1	CAP-FXD 0.01uF +-10% 50 V CER X7R	02010	06035C103KAT
C231	0160-7751	1	CAP-FXD 0.01uF +-10% 50 V CER X7R	02010	06035C103KAT
C232	0160-7751	1	CAP-FXD 0.01uF +-10% 50 V CER X7R	02010	06035C103KAT
C233	0160-7751	1	CAP-FXD 0.01uF +-10% 50 V CER X7R	02010	06035C103KAT
C234	0160-7751	1	CAP-FXD 0.01uF +-10% 50 V CER X7R	02010	06035C103KAT
C235	0160-7748	1	CAP-FXD 1000pF +-10% 50 V CER X7R	02010	06035C102KAT
C236	0160-7748	1	CAP-FXD 1000pF +-10% 50 V CER X7R	02010	06035C102KAT
C237	0160-7748	1	CAP-FXD 1000pF +-10% 50 V CER X7R	02010	06035C102KAT
C238	0160-7748	1	CAP-FXD 1000pF +-10% 50 V CER X7R	02010	06035C102KAT
C239	0160-7748	1	CAP-FXD 1000pF +-10% 50 V CER X7R	02010	06035C102KAT
C240	0160-7748	1	CAP-FXD 1000pF +-10% 50 V CER X7R	02010	06035C102KAT
C241	0160-7748	1	CAP-FXD 1000pF +-10% 50 V CER X7R	02010	06035C102KAT
C242	0160-7748	1	CAP-FXD 1000pF +-10% 50 V CER X7R	02010	06035C102KAT
C243	0160-7748	1	CAP-FXD 1000pF +-10% 50 V CER X7R	02010	06035C102KAT
C244	0160-7748	1	CAP-FXD 1000pF +-10% 50 V CER X7R	02010	06035C102KAT
C245	0160-7748	1	CAP-FXD 1000pF +-10% 50 V CER X7R	02010	06035C102KAT
C246	0160-7708	1	CAP-FXD 1000pF +-5% 50 V CER C0G	02010	08055A102JATRA
C247	0160-7708	1	CAP-FXD 1000pF +-5% 50 V CER C0G	02010	08055A102JATRA
C248	0160-6222	1	CAP-FXD 0.1uF +-10% 50 V CER X7R	02010	12105C104KAT A
C249	0160-6222	1	CAP-FXD 0.1uF +-10% 50 V CER X7R	02010	12105C104KAT A
C250	0160-6222	1	CAP-FXD 0.1uF +-10% 50 V CER X7R	02010	12105C104KAT A
C251	0160-6222	1	CAP-FXD 0.1uF +-10% 50 V CER X7R	02010	12105C104KAT A
C252	0160-6222	1	CAP-FXD 0.1uF +-10% 50 V CER X7R	02010	12105C104KAT A

**Indicates factory-selected value*

Agilent Part Number E4401-60088
Digital Demod DSP

Reference Designator	Agilent Part Number	Qty	Description	Mgr Code	Mfr Part Number
C253	0160-6222	1	CAP-FXD 0.1uF +-10% 50 V CER X7R	02010	12105C104KATA
C254	0160-6222	1	CAP-FXD 0.1uF +-10% 50 V CER X7R	02010	12105C104KATA
C255	0160-6222	1	CAP-FXD 0.1uF +-10% 50 V CER X7R	02010	12105C104KATA
C256	0160-7798	1	CAP-FXD 0.1uF +-10% 50 V CER X7R	06352	C2012X7R1H104K
C257	0160-7798	1	CAP-FXD 0.1uF +-10% 50 V CER X7R	06352	C2012X7R1H104K
C258	0180-3751	1	CAP-FXD 1uF +-20% 35 V TA	02010	TAJB105M035
C259	0160-7798	1	CAP-FXD 0.1uF +-10% 50 V CER X7R	06352	C2012X7R1H104K
C260	0160-7798	1	CAP-FXD 0.1uF +-10% 50 V CER X7R	06352	C2012X7R1H104K
C261	0160-7798	1	CAP-FXD 0.1uF +-10% 50 V CER X7R	06352	C2012X7R1H104K
C262	0160-7798	1	CAP-FXD 0.1uF +-10% 50 V CER X7R	06352	C2012X7R1H104K
C263	0180-4287	1	CAP-FXD 10uF +-20% 35 V TA	02010	TAJD106M035
C264	0180-4287	1	CAP-FXD 10uF +-20% 35 V TA	02010	TAJD106M035
C265	0180-3751	1	CAP-FXD 1uF +-20% 35 V TA	02010	TAJB105M035
C266	0160-7798	1	CAP-FXD 0.1uF +-10% 50 V CER X7R	06352	C2012X7R1H104K
C267	0160-7973	1	CAP-FXD 30pF +-5% 50 V CER C0G	02010	06035A300JAT
C268	0160-7967	1	CAP-FXD 9pF 50 V CER C0G	06352	C1608COG1H090CT
C269	0180-3751	1	CAP-FXD 1uF +-20% 35 V TA	02010	TAJB105M035
C270	0160-7798	1	CAP-FXD 0.1uF +-10% 50 V CER X7R	06352	C2012X7R1H104K
C271	0160-7751	1	CAP-FXD 0.01uF +-10% 50 V CER X7R	02010	06035C103KAT
C272	0160-7798	1	CAP-FXD 0.1uF +-10% 50 V CER X7R	06352	C2012X7R1H104K
C273	0160-7798	1	CAP-FXD 0.1uF +-10% 50 V CER X7R	06352	C2012X7R1H104K
C274	0160-7798	1	CAP-FXD 0.1uF +-10% 50 V CER X7R	06352	C2012X7R1H104K
CR1	1906-0291	1	DIODE-DUAL 70V 100MA T0-236AA	02910	BAV99
CR2	1900-0217	1	DIODE-SCHOTTKY SM SIG	01542	HSMS-2822
CR3	1900-0217	1	DIODE-SCHOTTKY SM SIG	01542	HSMS-2822
CR4	1900-0217	1	DIODE-SCHOTTKY SM SIG	01542	HSMS-2822
CR5	1900-0217	1	DIODE-SCHOTTKY SM SIG	01542	HSMS-2822
CR6	1900-0217	1	DIODE-SCHOTTKY SM SIG	01542	HSMS-2822
DS1	1990-1713	1	LED-LAMP LUM-INT4MCD IF20MA-MAX BVR5V	01542	HSMG-C670

 **Indicates factory-selected value*

Agilent Part Number E4401-60088
Digital Demod DSP

Reference Designator	Agilent Part Number	Qty	Description	Mgr Code	Mfr Part Number
DS2	1990-1713	1	LED-LAMP LUM-INT4MCD IF20MA-MAX BVR5V	01542	HSMG-C670
DS3	1990-1713	1	LED-LAMP LUM-INT4MCD IF20MA-MAX BVR5V	01542	HSMG-C670
DS4	1990-1713	1	LED-LAMP LUM-INT4MCD IF20MA-MAX BVR5V	01542	HSMG-C670
DS5	1990-1713	1	LED-LAMP LUM-INT4MCD IF20MA-MAX BVR5V	01542	HSMG-C670
DS6	1990-1713	1	LED-LAMP LUM-INT4MCD IF20MA-MAX BVR5V	01542	HSMG-C670
DS7	1990-1713	1	LED-LAMP LUM-INT4MCD IF20MA-MAX BVR5V	01542	HSMG-C670
DS8	1990-1713	1	LED-LAMP LUM-INT4MCD IF20MA-MAX BVR5V	01542	HSMG-C670
E1	9170-1421	1	CORE-SHIELDING BEAD	06352	HF50ACB-322513
E2	9170-1421	1	CORE-SHIELDING BEAD	06352	HF50ACB-322513
E6	9170-1421	1	CORE-SHIELDING BEAD	06352	HF50ACB-322513
E7	9170-1421	1	CORE-SHIELDING BEAD	06352	HF50ACB-322513
E8	9170-1421	1	CORE-SHIELDING BEAD	06352	HF50ACB-322513
E11	9170-1421	1	CORE-SHIELDING BEAD	06352	HF50ACB-322513
E12	9170-1421	1	CORE-SHIELDING BEAD	06352	HF50ACB-322513
J1	1252-1325	1	CONN-POST TYPE .100-PIN-SPCG-MTG-END	04726	N2510-6002UB
J6	1251-4670	1	CONN-POST TYPE .100-PIN-SPCG-MTG-END	13369	68000-603
J7	1252-5906	1	CONN-RECT MICRORBN 100-CKT 100-CONT	01380	2-557101-5
J8	1251-8823	1	CONN-POST TYPE .100-PIN-SPCG-MTG-END	04726	2514-6002UB
J9	1252-5906	1	CONN-RECT MICRORBN 100-CKT 100-CONT	01380	2-557101-5
J10	1252-3838	1	CONN-POST TYPE .100-PIN-SPCG-MTG-END	13369	69190-605
J11	1252-3838	1	CONN-POST TYPE .100-PIN-SPCG-MTG-END	13369	69190-605
J12	1250-1918	1	TEST JACK VERTICAL COAXIAL	04670	129-0701-201
J13	1250-1918	1	TEST JACK VERTICAL COAXIAL	04670	129-0701-201
J14	1250-1842	1	CONNECTOR-RF BNC FEMALE PC-W-STDFS	05879	31-5506
J15	1252-3838	1	CONN-POST TYPE .100-PIN-SPCG-MTG-END	13369	69190-605

Agilent Part Number E4401-60088
Digital Demod DSP

Reference Designator	Agilent Part Number	Qty	Description	Mgr Code	Mfr Part Number
J16	1251-4670	1	CONN-POST TYPE .100-PIN-SPCG-MTG-END	13369	68000-603
J17	1251-4670	1	CONN-POST TYPE .100-PIN-SPCG-MTG-END	13369	68000-603
J18	1252-3838	1	CONN-POST TYPE .100-PIN-SPCG-MTG-END	13369	69190-605
J20	1252-3838	1	CONN-POST TYPE .100-PIN-SPCG-MTG-END	13369	69190-605
J21	1252-3838	1	CONN-POST TYPE .100-PIN-SPCG-MTG-END	13369	69190-605
J22	1252-3838	1	CONN-POST TYPE .100-PIN-SPCG-MTG-END	13369	69190-605
J23	1251-4670	1	CONN-POST TYPE .100-PIN-SPCG-MTG-END	13369	68000-603
J24	1251-4670	1	CONN-POST TYPE .100-PIN-SPCG-MTG-END	13369	68000-603
J25	1251-4670	1	CONN-POST TYPE .100-PIN-SPCG-MTG-END	13369	68000-603
J26	1251-4670	1	CONN-POST TYPE .100-PIN-SPCG-MTG-END	13369	68000-603
J28	1252-3838	1	CONN-POST TYPE .100-PIN-SPCG-MTG-END	13369	69190-605
L1	9140-1736	1	INDUCTOR 47uH +20% -20% 7.3W-mmX7.3LG-mm	06353	E636CY-470M-P3
L2	9140-1736	1	INDUCTOR 47uH +20% -20% 7.3W-mmX7.3LG-mm	06353	E636CY-470M-P3
L3	9140-1736	1	INDUCTOR 47uH +20% -20% 7.3W-mmX7.3LG-mm	06353	E636CY-470M-P3
L4	9140-1736	1	INDUCTOR 47uH +20% -20% 7.3W-mmX7.3LG-mm	06353	E636CY-470M-P3
L5	9140-1777	1	INDUCTOR 1uH +20% -20% 7.3W-mmX7.3LG-mm	06353	636CY-1R0M
L6	9140-1110	1	INDUCTOR 5.6uH +-5% 3.4W-mmX4.8LG-mm	28480	9140-1110
L9	9170-1421	1	CORE-SHIELDING BEAD	06352	HF50ACB-322513
L10	9170-1421	1	CORE-SHIELDING BEAD	06352	HF50ACB-322513
L11	9140-1107	1	INDUCTOR 2.2uH +-5% 3.4W-mmX4.8LG-mm	28480	9140-1107
MP2	0515-1934	1	SCREW-MACHINE ASSEMBLY M2.5 X 0.45	05610	0515-1934
MP4	E4401-00060	1	DRESS PNL-DSP	28480	E4401-00060
MP5	2950-0054	1	NUT-HEX-DBL-CHAM 1/2-28-THD .125-IN-THK	04567	2950-0054
P1	1252-6592	1	CONN-RECT MICRORBN 80-CKT 80-CONT	01380	796026-1
P4	1250-2459	1	CONNECTOR-RF MMCX FEMALE PC-W/O-STDF	06860	82 MMCX-50-0-1/111OE

 **Indicates factory-selected value*

Agilent Part Number E4401-60088
Digital Demod DSP

Reference Designator	Agilent Part Number	Qty	Description	Mgr Code	Mfr Part Number
P5	1250-2459	1	CONNECTOR-RF MMCX FEMALE PC-W/O-STDF	06860	82 MMCX-50-0-1/ 111OE
Q2	1855-0734	1	TRANSISTOR MOSFET 2N7002 N-CHAN E-MODE	02910	2N7002
Q3	1855-0936	1	TRANSISTOR MOSFET P-CHAN E-MODE SI SO-8	05524	SI9433DY
R7	1810-1682	1	NET-RES 8 4.7K OHM 10-PIN	00746	MNR35J5RJ472
R8	1810-1581	1	NET-RES 4 33.0 OHM 8-PIN	00746	MNR34K5AWJ330
R9	1810-1581	1	NET-RES 4 33.0 OHM 8-PIN	00746	MNR34K5AWJ330
R10	1810-1581	1	NET-RES 4 33.0 OHM 8-PIN	00746	MNR34K5AWJ330
R11	1810-1581	1	NET-RES 4 33.0 OHM 8-PIN	00746	MNR34K5AWJ330
R12	1810-1581	1	NET-RES 4 33.0 OHM 8-PIN	00746	MNR34K5AWJ330
R13	1810-1581	1	NET-RES 4 33.0 OHM 8-PIN	00746	MNR34K5AWJ330
R14	1810-1581	1	NET-RES 4 33.0 OHM 8-PIN	00746	MNR34K5AWJ330
R15	1810-1581	1	NET-RES 4 33.0 OHM 8-PIN	00746	MNR34K5AWJ330
R16	1810-1581	1	NET-RES 4 33.0 OHM 8-PIN	00746	MNR34K5AWJ330
R17	1810-1581	1	NET-RES 4 33.0 OHM 8-PIN	00746	MNR34K5AWJ330
R18	1810-1581	1	NET-RES 4 33.0 OHM 8-PIN	00746	MNR34K5AWJ330
R19	1810-1064	1	NET-RES 15 10.0K OHM 16-PIN	05524	SOMC-16-01-103G
R23	0699-3973	1	RESISTOR 13.3K +-1% .063W TKF TC0+-200	09891	RK73H1J1332F
R24	0699-3970	1	RESISTOR 10K +-1% .063W TKF TC0+-200	09891	RK73H1J1002F
R25	0699-3970	1	RESISTOR 10K +-1% .063W TKF TC0+-200	09891	RK73H1J1002F
R26	0699-3970	1	RESISTOR 10K +-1% .063W TKF TC0+-200	09891	RK73H1J1002F
R27	0699-3970	1	RESISTOR 10K +-1% .063W TKF TC0+-200	09891	RK73H1J1002F
R28	0699-3970	1	RESISTOR 10K +-1% .063W TKF TC0+-200	09891	RK73H1J1002F
R29	0699-3970	1	RESISTOR 10K +-1% .063W TKF TC0+-200	09891	RK73H1J1002F
R30	0699-3970	1	RESISTOR 10K +-1% .063W TKF TC0+-200	09891	RK73H1J1002F
R34	0699-3970	1	RESISTOR 10K +-1% .063W TKF TC0+-200	09891	RK73H1J1002F
R36	0699-3970	1	RESISTOR 10K +-1% .063W TKF TC0+-200	09891	RK73H1J1002F
R37	0699-3970	1	RESISTOR 10K +-1% .063W TKF TC0+-200	09891	RK73H1J1002F
R38	0699-3970	1	RESISTOR 10K +-1% .063W TKF TC0+-200	09891	RK73H1J1002F

Agilent Part Number E4401-60088
Digital Demod DSP

Reference Designator	Agilent Part Number	Qty	Description	Mgr Code	Mfr Part Number
R39	0699-3970	1	RESISTOR 10K +-1% .063W TKF TC0+-200	09891	RK73H1J1002F
R40	0699-3970	1	RESISTOR 10K +-1% .063W TKF TC0+-200	09891	RK73H1J1002F
R41	0699-3970	1	RESISTOR 10K +-1% .063W TKF TC0+-200	09891	RK73H1J1002F
R42	0699-3970	1	RESISTOR 10K +-1% .063W TKF TC0+-200	09891	RK73H1J1002F
R43	0699-3970	1	RESISTOR 10K +-1% .063W TKF TC0+-200	09891	RK73H1J1002F
R44	0699-3970	1	RESISTOR 10K +-1% .063W TKF TC0+-200	09891	RK73H1J1002F
R45	0699-3970	1	RESISTOR 10K +-1% .063W TKF TC0+-200	09891	RK73H1J1002F
R47	0699-3947	1	RESISTOR 1K +-1% .063W TKF TC0+-200	00746	MCR03-F-1001
R48	0699-3970	1	RESISTOR 10K +-1% .063W TKF TC0+-200	09891	RK73H1J1002F
R49	0699-3970	1	RESISTOR 10K +-1% .063W TKF TC0+-200	09891	RK73H1J1002F
R50	0699-3970	1	RESISTOR 10K +-1% .063W TKF TC0+-200	09891	RK73H1J1002F
R51	0699-3970	1	RESISTOR 10K +-1% .063W TKF TC0+-200	09891	RK73H1J1002F
R52	0699-3970	1	RESISTOR 10K +-1% .063W TKF TC0+-200	09891	RK73H1J1002F
R53	0699-3970	1	RESISTOR 10K +-1% .063W TKF TC0+-200	09891	RK73H1J1002F
R54	0699-3970	1	RESISTOR 10K +-1% .063W TKF TC0+-200	09891	RK73H1J1002F
R55	0699-3970	1	RESISTOR 10K +-1% .063W TKF TC0+-200	09891	RK73H1J1002F
R56	0699-3970	1	RESISTOR 10K +-1% .063W TKF TC0+-200	09891	RK73H1J1002F
R57	0699-3970	1	RESISTOR 10K +-1% .063W TKF TC0+-200	09891	RK73H1J1002F
R58	0699-3970	1	RESISTOR 10K +-1% .063W TKF TC0+-200	09891	RK73H1J1002F
R59	0699-3970	1	RESISTOR 10K +-1% .063W TKF TC0+-200	09891	RK73H1J1002F
R60	0699-3970	1	RESISTOR 10K +-1% .063W TKF TC0+-200	09891	RK73H1J1002F
R67	0699-3967	1	RESISTOR 7.5K +-1% .063W TKF TC0+-200	09891	RK73H1J7501F
R68	0699-3941	1	RESISTOR 511 +-1% .063W TKF TC0+-200	00746	MCR03-F-5110
R69	0699-3941	1	RESISTOR 511 +-1% .063W TKF TC0+-200	00746	MCR03-F-5110
R70	0699-3941	1	RESISTOR 511 +-1% .063W TKF TC0+-200	00746	MCR03-F-5110
R71	0699-3941	1	RESISTOR 511 +-1% .063W TKF TC0+-200	00746	MCR03-F-5110
R72	0699-3941	1	RESISTOR 511 +-1% .063W TKF TC0+-200	00746	MCR03-F-5110
R73	0699-3941	1	RESISTOR 511 +-1% .063W TKF TC0+-200	00746	MCR03-F-5110
R74	0699-3941	1	RESISTOR 511 +-1% .063W TKF TC0+-200	00746	MCR03-F-5110
R75	0699-3941	1	RESISTOR 511 +-1% .063W TKF TC0+-200	00746	MCR03-F-5110

 **Indicates factory-selected value*

Agilent Part Number E4401-60088
Digital Demod DSP

Reference Designator	Agilent Part Number	Qty	Description	Mgr Code	Mfr Part Number
R76	0699-3941	1	RESISTOR 511 +-1% .063W TKF TC0+-200	00746	MCR03-F-5110
R77	0699-3941	1	RESISTOR 511 +-1% .063W TKF TC0+-200	00746	MCR03-F-5110
R78	0699-3941	1	RESISTOR 511 +-1% .063W TKF TC0+-200	00746	MCR03-F-5110
R79	0699-3941	1	RESISTOR 511 +-1% .063W TKF TC0+-200	00746	MCR03-F-5110
R81	0699-3924	1	RESISTOR 100 +-1% .063W TKF TC0+-200	00746	MCR03-F-1000
R83	0699-3924	1	RESISTOR 100 +-1% .063W TKF TC0+-200	00746	MCR03-F-1000
R85	0699-3924	1	RESISTOR 100 +-1% .063W TKF TC0+-200	00746	MCR03-F-1000
R86	0699-3924	1	RESISTOR 100 +-1% .063W TKF TC0+-200	00746	MCR03-F-1000
R87	0699-3924	1	RESISTOR 100 +-1% .063W TKF TC0+-200	00746	MCR03-F-1000
R89	0699-3924	1	RESISTOR 100 +-1% .063W TKF TC0+-200	00746	MCR03-F-1000
R93	0699-3918	1	RESISTOR 51.1 +-1% .063W TKF TC0+-200	00746	MCR03-F-51R1
R96	0699-3955	1	RESISTOR 2.15K +-1% .063W TKF TC0+-200	09891	RK73H1J2151F
R99	0699-3914	1	RESISTOR 34.8 +-1% .063W TKF TC0+-200	00746	MCR03-F-34R8
R100	0699-3914	1	RESISTOR 34.8 +-1% .063W TKF TC0+-200	00746	MCR03-F-34R8
R101	0699-3574	1	RESISTOR 0 .0625W TKF	09891	RM73Z1JT
R102	0699-3574	1	RESISTOR 0 .0625W TKF	09891	RM73Z1JT
R103	0699-3574	1	RESISTOR 0 .0625W TKF	09891	RM73Z1JT
R104	0699-3574	1	RESISTOR 0 .0625W TKF	09891	RM73Z1JT
R106	0699-3574	1	RESISTOR 0 .0625W TKF	09891	RM73Z1JT
R107	0699-2847	1	RESISTOR 2K +-0.1% .125W TF TC0+-25	01172	BLU-1206 2K .1% 25PPM
R108	0699-2847	1	RESISTOR 2K +-0.1% .125W TF TC0+-25	01172	BLU-1206 2K .1% 25PPM
R109	0699-2837	1	RESISTOR 30K +-0.1% .125W TF TC0+-25	02499	W1206R033002BT
R110	0699-2835	1	RESISTOR 500 +-0.1% .125W TF TC0+-25	02499	W1206R035000BT
R111	0699-2829	1	RESISTOR 50 +-0.1% .125W TF TC0+-25	02499	W1206R030500BT
R112	0699-2828	1	RESISTOR 1.5K +-0.1% .125W TF TC0+-25	01172	BLU-1206 1K5 .1% 25PPM
R113	0699-2827	1	RESISTOR 900 +-0.1% .125W TF TC0+-25	02499	W1206R039000BT
R114	0699-2490	1	RESISTOR 1K +-0.1% .125W TF TC0+-25	01172	BLU-1206 1K .1% 25PPM

Agilent Part Number E4401-60088
Digital Demod DSP

Reference Designator	Agilent Part Number	Qty	Description	Mgr Code	Mfr Part Number
R116	0699-2490	1	RESISTOR 1K +-0.1% .125W TF TC0+-25	01172	BLU-1206 1K .1% 25PPM
R117	0699-2490	1	RESISTOR 1K +-0.1% .125W TF TC0+-25	01172	BLU-1206 1K .1% 25PPM
R118	0699-2489	1	RESISTOR 10K +-0.1% .125W TF TC0+-25	01172	BLU-1206 10K .1% 25PPM
R119	0699-3940	1	RESISTOR 464 +-1% .063W TKF TC0+-200	09891	RK73H1J4640F
R120	0699-1431	1	RESISTOR 464 +-1% .125W TKF TC0+-100	05524	CRCW12064640F
R121	0699-1431	1	RESISTOR 464 +-1% .125W TKF TC0+-100	05524	CRCW12064640F
R122	0699-1431	1	RESISTOR 464 +-1% .125W TKF TC0+-100	05524	CRCW12064640F
R123	0699-1428	1	RESISTOR 348 +-1% .125W TKF TC0+-100	05524	CRCW12063480F
R124	0699-1428	1	RESISTOR 348 +-1% .125W TKF TC0+-100	05524	CRCW12063480F
R125	0699-1428	1	RESISTOR 348 +-1% .125W TKF TC0+-100	05524	CRCW12063480F
R126	0699-1428	1	RESISTOR 348 +-1% .125W TKF TC0+-100	05524	CRCW12063480F
R127	0699-3940	1	RESISTOR 464 +-1% .063W TKF TC0+-200	09891	RK73H1J4640F
R132	0699-3970	1	RESISTOR 10K +-1% .063W TKF TC0+-200	09891	RK73H1J1002F
R133	0699-3924	1	RESISTOR 100 +-1% .063W TKF TC0+-200	00746	MCR03-F-1000
R134	0699-3964	1	RESISTOR 5.11K +-1% .063W TKF TC0+-200	09891	RK73H1J5111F
R136	0699-3574	1	RESISTOR 0 .0625W TKF	09891	RM73Z1JT
R137	0699-3924	1	RESISTOR 100 +-1% .063W TKF TC0+-200	00746	MCR03-F-1000
R138	0699-3940	1	RESISTOR 464 +-1% .063W TKF TC0+-200	09891	RK73H1J4640F
R139	0699-3940	1	RESISTOR 464 +-1% .063W TKF TC0+-200	09891	RK73H1J4640F
R140	0699-3940	1	RESISTOR 464 +-1% .063W TKF TC0+-200	09891	RK73H1J4640F
R141	0699-3940	1	RESISTOR 464 +-1% .063W TKF TC0+-200	09891	RK73H1J4640F
R142	0699-3940	1	RESISTOR 464 +-1% .063W TKF TC0+-200	09891	RK73H1J4640F
R143	0699-3940	1	RESISTOR 464 +-1% .063W TKF TC0+-200	09891	RK73H1J4640F
R144	0699-3940	1	RESISTOR 464 +-1% .063W TKF TC0+-200	09891	RK73H1J4640F
R145	0699-3970	1	RESISTOR 10K +-1% .063W TKF TC0+-200	09891	RK73H1J1002F
R146	0699-3947	1	RESISTOR 1K +-1% .063W TKF TC0+-200	00746	MCR03-F-1001
R147	0699-2835	1	RESISTOR 500 +-0.1% .125W TF TC0+-25	02499	W1206R035000BT
R148	0699-2835	1	RESISTOR 500 +-0.1% .125W TF TC0+-25	02499	W1206R035000BT

 **Indicates factory-selected value*

Agilent Part Number E4401-60088
Digital Demod DSP

Reference Designator	Agilent Part Number	Qty	Description	Mgr Code	Mfr Part Number
R149	0699-3970	1	RESISTOR 10K +-1% .063W TKF TC0+-200	09891	RK73H1J1002F
R150	0699-3963	1	RESISTOR 4.64K +-1% .063W TKF TC0+-200	09891	RK73H1J4641F
R151	0699-3970	1	RESISTOR 10K +-1% .063W TKF TC0+-200	09891	RK73H1J1002F
R152	0699-3924	1	RESISTOR 100 +-1% .063W TKF TC0+-200	00746	MCR03-F-1000
R153	0699-3914	1	RESISTOR 34.8 +-1% .063W TKF TC0+-200	00746	MCR03-F-34R8
R154	0699-3970	1	RESISTOR 10K +-1% .063W TKF TC0+-200	09891	RK73H1J1002F
R155	0699-2847	1	RESISTOR 2K +-0.1% .125W TF TC0+-25	01172	BLU-1206 2K .1% 25PPM
R156	0699-2847	1	RESISTOR 2K +-0.1% .125W TF TC0+-25	01172	BLU-1206 2K .1% 25PPM
R157	0699-2847	1	RESISTOR 2K +-0.1% .125W TF TC0+-25	01172	BLU-1206 2K .1% 25PPM
R158	0699-2847	1	RESISTOR 2K +-0.1% .125W TF TC0+-25	01172	BLU-1206 2K .1% 25PPM
R159	0699-3970	1	RESISTOR 10K +-1% .063W TKF TC0+-200	09891	RK73H1J1002F
R160	0699-3970	1	RESISTOR 10K +-1% .063W TKF TC0+-200	09891	RK73H1J1002F
R161	0699-3970	1	RESISTOR 10K +-1% .063W TKF TC0+-200	09891	RK73H1J1002F
R163	0699-3970	1	RESISTOR 10K +-1% .063W TKF TC0+-200	09891	RK73H1J1002F
S1	3101-3024	1	SWITCH-PB SPST-NO MOM .01A 50 VAC	03692	KSA0V331
S2	3101-2935	1	SWITCH-DIP SURF-MT-SL SPST 0.05A 6VDC	02483	219-8LPST
T1	9100-4444	1	TRANSFORMER-RF INPUT IMP.:50 OHMS	02739	T1-IT-X65
TP1	0360-0124	1	CONNECTOR-SGL CONT PIN .04-IN-BSC-SZ RND	13309	0360-0124
TP2	0360-0124	1	CONNECTOR-SGL CONT PIN .04-IN-BSC-SZ RND	13309	0360-0124
TP3	0360-0124	1	CONNECTOR-SGL CONT PIN .04-IN-BSC-SZ RND	13309	0360-0124
TP4	0360-0124	1	CONNECTOR-SGL CONT PIN .04-IN-BSC-SZ RND	13309	0360-0124
TP5	1251-0600	1	CONNECTOR-SGL CONT PIN 1.14-MM-BSC-SZ SQ	03418	16-06-0034
TP6	1251-0600	1	CONNECTOR-SGL CONT PIN 1.14-MM-BSC-SZ SQ	03418	16-06-0034

**Indicates factory-selected value*

Agilent Part Number E4401-60088
Digital Demod DSP

Reference Designator	Agilent Part Number	Qty	Description	Mgr Code	Mfr Part Number
TP7	1251-0600	1	CONNECTOR-SGL CONT PIN 1.14-MM-BSC-SZ SQ	03418	16-06-0034
TP8	1251-0600	1	CONNECTOR-SGL CONT PIN 1.14-MM-BSC-SZ SQ	03418	16-06-0034
TP10	1251-0600	1	CONNECTOR-SGL CONT PIN 1.14-MM-BSC-SZ SQ	03418	16-06-0034
TP11	1251-0600	1	CONNECTOR-SGL CONT PIN 1.14-MM-BSC-SZ SQ	03418	16-06-0034
U6	1820-5566	1	IC SCHMITT-TRIG TTL/F INV HEX	02910	N74F14D
U7	1820-5180	1	IC BFR TTL/ALS NAND QUAD 2-INP	02237	DM74ALS03BMX
U8	1813-0861	1	CLK-OSC-XTAL STD 40.000-MHZ 0.01%	12768	SG-615PH40.000MC
U9	E4401-80089	1		28480	E4401-80089
U10	E4401-80084	1		28480	E4401-80084
U11	E4401-80086	1		28480	E4401-80086
U12	E4401-80088	1		28480	E4401-80088
U13	1821-5379	1	IC-BIT SLICE SUPPORT CMOS VLSI 240-PQFP	03285	ADSP21062KS-160
U14	1826-3540	1	A/D 12-BIT 44-THN-QUD-FLATPAK BPLR	03285	AD9042AST
U15	1826-3433	1	IC OP AMP WB 8 PIN PLSTC-SOIC	03285	AD9631AR
U18	1826-3032	1	ANALOG MULTIPLEXER 8 CHNL 20 -PLCC	05524	DG534ADN
U19	1826-3032	1	ANALOG MULTIPLEXER 8 CHNL 20 -PLCC	05524	DG534ADN
U20	1826-2981	1	IC OP AMP PRCN DUAL 8 PIN PLSTC-SOIC	10858	LT1124CS8
U22	1826-1950	1	IC COMPARATOR HS SINGLE 8 PIN PLSTC-SOIC	10858	LT1016CS8
U23	1826-1687	1	IC PWR MGT-V-REF-FXD 9.95/10.05V 8 PINS	10858	LT1021DCS8-10
U24	E4401-80087	1		28480	E4401-80087
U27	E4401-80095	1		28480	E4401-80095
U29	1820-8928	1	IC TRANSCEIVER BICMOS/ABT BUS DUAL 8-BIT	01698	SN74ABT16245ADL
U30	1820-8928	1	IC TRANSCEIVER BICMOS/ABT BUS DUAL 8-BIT	01698	SN74ABT16245ADL

 **Indicates factory-selected value*

Agilent Part Number E4401-60088
Digital Demod DSP

Reference Designator	Agilent Part Number	Qty	Description	Mgr Code	Mfr Part Number
U31	1820-8927	1	IC DRVR BICMOS/ABT LINE 16-BIT	02910	74ABT16244ADL
U32	1820-6311	1	IC FF TTL/F D-TYPE POS-EDGE-TRIG COM	02910	74F574D
U33	1820-6311	1	IC FF TTL/F D-TYPE POS-EDGE-TRIG COM	02910	74F574D
U34	1820-5947	1	IC FF CMOS/ACT D-TYPE POS-EDGE-TRIG COM	36633	MC74ACT574DWR2
U35	1820-5947	1	IC FF CMOS/ACT D-TYPE POS-EDGE-TRIG COM	36633	MC74ACT574DWR2
U36	1820-5938	1	IC GATE CMOS/ACT NAND QUAD 2-INP	01698	SN74ACT00D
U38	1820-5218	1	IC DRVR TTL/F LINE OCTL	02910	74F244D
U41	1820-4377	1	IC GATE TTL/F NAND QUAD 2-INP	01698	SN74F00D
U42	1818-7949	1	4M BIT IC-SRAM CMOS 1-NS 44-SOJ	06347	HM6216255HJP-10
U44	1818-7949	1	4M BIT IC-SRAM CMOS 1-NS 44-SOJ	06347	HM6216255HJP-10
U46	E4401-80090	1		28480	E4401-80090
U47	1818-7794	1	IC 32M-BIT FLASH 70-NS CMOS	13523	LH28F320SKTD-L70
U48	1818-7794	1	IC 32M-BIT FLASH 70-NS CMOS	13523	LH28F320SKTD-L70
U52	1818-7949	1	4M BIT IC-SRAM CMOS 1-NS 44-SOJ	06347	HM6216255HJP-10
U53	1821-3976	1	IC GATE CMOS OR QUAD 2-INP	02237	74VHC32M
U55	1820-5180	1	IC BFR TTL/ALS NAND QUAD 2-INP	02237	DM74ALS03BMX
U56	1820-6311	1	IC FF TTL/F D-TYPE POS-EDGE-TRIG COM	02910	74F574D
U57	1820-6311	1	IC FF TTL/F D-TYPE POS-EDGE-TRIG COM	02910	74F574D
U59	1818-7949	1	4M BIT IC-SRAM CMOS 1-NS 44-SOJ	06347	HM6216255HJP-10
U60	1821-3895	1	IC MUXR/DATA-SEL CMOS 4-TO-1-LINE DUAL	10253	QS3253Q
U62	1826-3122	1	IC PWR MGT-DC-DC-CONV 11.4/12.6V 8 PINS	11302	MAX662ACSA
U63	1826-3433	1	IC OP AMP WB 8 PIN PLSTC-SOIC	03285	AD9631AR
U64	1826-3433	1	IC OP AMP WB 8 PIN PLSTC-SOIC	03285	AD9631AR
U65	1821-3668	1	IC BFR CMOS BUS QUAD	10253	QS3125Q
U66	1821-3668	1	IC BFR CMOS BUS QUAD	10253	QS3125Q
U67	1821-3979	1	IC BFR CMOS QUAD	02237	74VHC125M
U68	1826-2981	1	IC OP AMP PRCN DUAL 8 PIN PLSTC-SOIC	10858	LT1124CS8
XU46	1200-1593	1	SOCKET-IC-PLCC 32-CONT RECTGLR J-LEAD	01380	3-822498-1

D-E4401-60088-2

SYM	REVISIONS	APPROVED	DATE
A	AS ISSUED		
B			

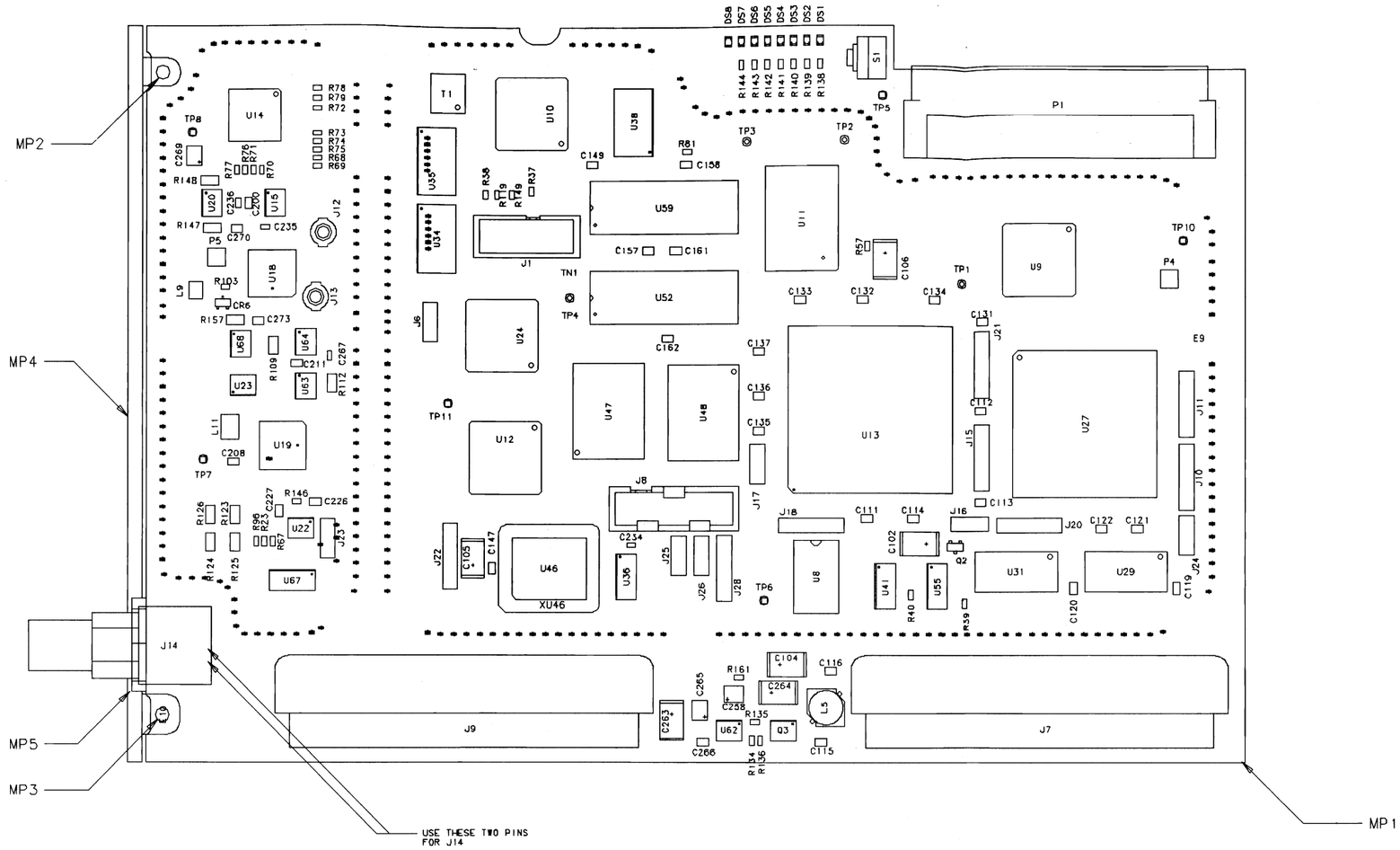

NOTES: UNLESS OTHERWISE SPECIFIED

1 SEE MATERIAL LIST E4401-60088

2 THIS ASSEMBLY USES RAW BOARD NUMBER: E4401-20088

3 THIS BOARD CONTAINS .010" VIAS IN PADS: ☐ YES ☒ NO

4 TORQUE MP5 TO 20 IN-LBS

5 TORQUE MP2 AND MP3 TO 5 IN-LBS

6 SET ALL SWITCHES TO THE SAME POSITION (ON OR OFF)

TOPSIDE

HP PROPRIETARY
THIS DOCUMENT CONTAINS CONFIDENTIAL, PROPRIETARY INFORMATION THAT IS HEWLETT-PACKARD (HP) PROPERTY. DO NOT DISCLOSE TO OR DUPLICATE FOR OTHERS EXCEPT AS AUTHORIZED BY HP

UNLESS OTHERWISE SPECIFIED. DIMENSIONS ARE IN INCHES.
TOLERANCES: XX XXX .010 XX.XX .02
THIRD ANGLE PROJECTION
DO NOT SCALE THIS DRAWING

DRAWN BY	DATE	ASSEMBLY, PWB DSP BOARD
ENGINEER/CHECKER	DATE	
RELEASE TO PROD.	DATE	
SUPERSEDES DWG.		TITLE

MENTOR FILENAME
SCALE NONE
SHEET 1 OF 2
HEWLETT PACKARD
E4401-60088 PART NUMBER
D-E4401-60088-2

D-E4401-60088-2

SYM	REVISIONS	APPROVED	DATE
	SEE SHEET 1		

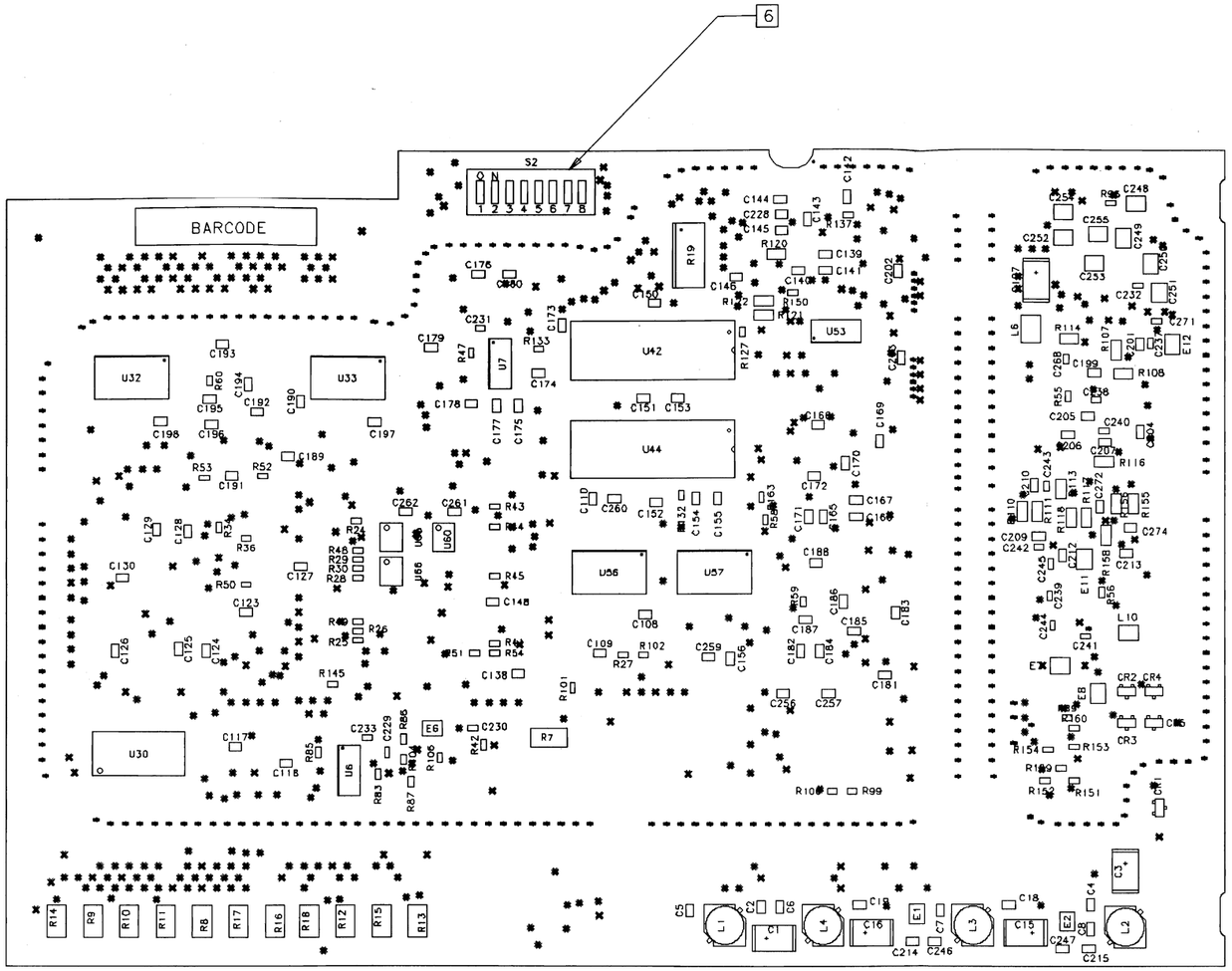

BOTTOM SIDE

HP PROPRIETARY
THIS DOCUMENT CONTAINS CONFIDENTIAL, PROPRIETARY INFORMATION THAT IS HEWLETT-PACKARD (HP) PROPERTY. DO NOT DISCLOSE TO OR DUPLICATE FOR OTHERS EXCEPT AS AUTHORIZED BY HP

UNLESS OTHERWISE SPECIFIED. DIMENSIONS ARE IN INCHES.
TOLERANCES: XX XXX .010 XX.XX .02
THIRD ANGLE PROJECTION
DO NOT SCALE THIS DRAWING

DRAWN BY	DATE	ASSEMBLY, PWB DSP BOARD
ENGINEER/CHECKER	DATE	
RELEASE TO PROD.	DATE	
SUPERSEDES DWG.		TITLE

MENTOR FILENAME
SCALE NONE
SHEET 2 OF 2
HEWLETT PACKARD
E4401-60088
PART NUMBER
D-E4401-60088-2

D-E4401-60088-1

REV	INFORMATION	APPROVED	DATE

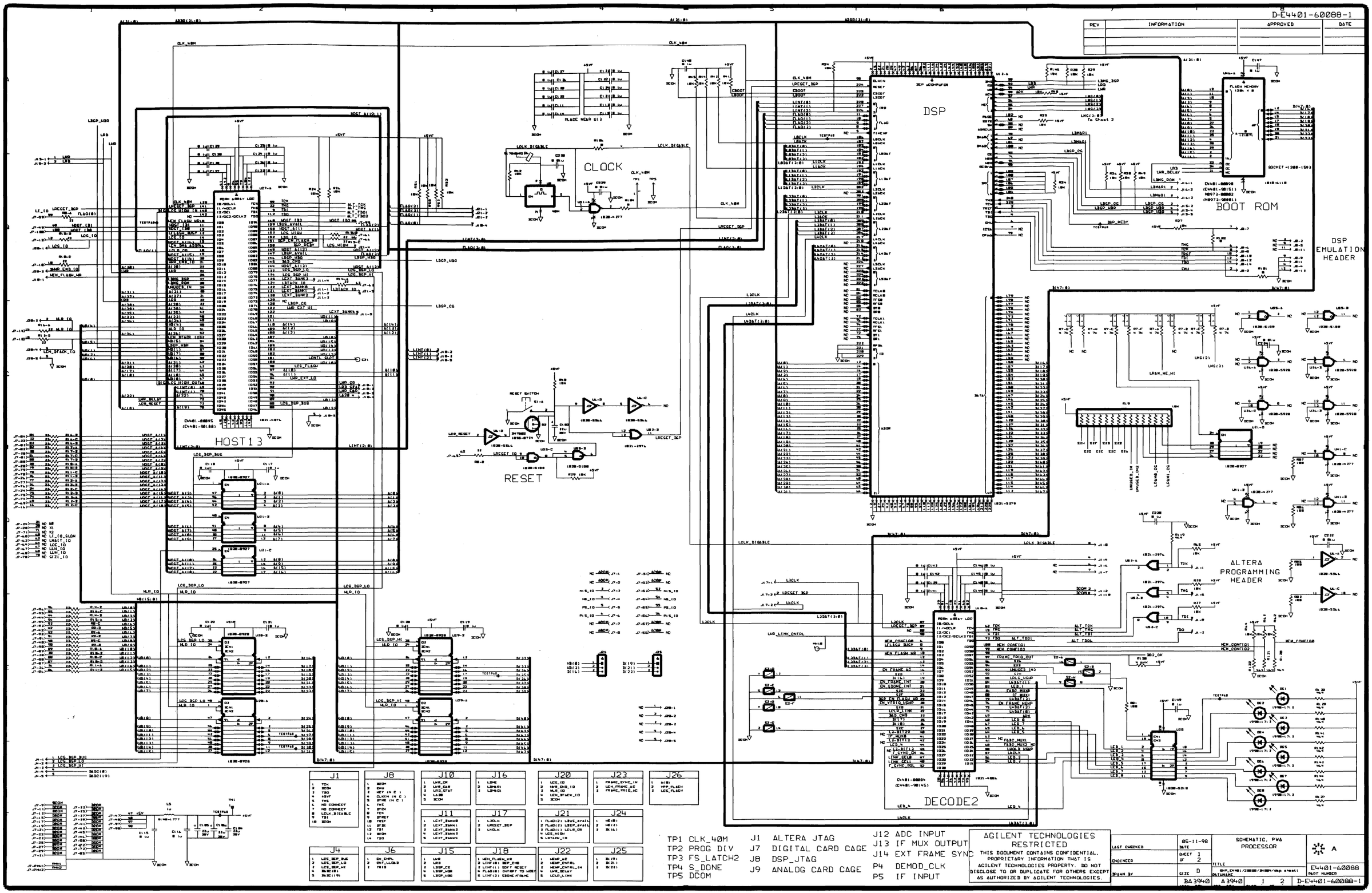

TP1 CLK_40M
TP2 PROG DIV
TP3 FS_LATCH2
TP4 S_DONE
TP5 DCOM

J1 ALTERA JTAG
J7 DIGITAL CARD CAGE
J8 DSP_JTAG
J9 ANALOG CARD CAGE

J12 ADC INPUT
J13 IF MUX OUTPUT
J14 EXT FRAME SYNC
P4 DEMOD_CLK
P5 IF INPUT

AGILENT TECHNOLOGIES RESTRICTED
THIS DOCUMENT CONTAINS CONFIDENTIAL, PROPRIETARY INFORMATION THAT IS AGILENT TECHNOLOGIES PROPERTY. DO NOT DISCLOSE TO OR DUPLICATE FOR OTHERS EXCEPT AS AUTHORIZED BY AGILENT TECHNOLOGIES.

LAST CHECKED	05-11-98 DATE	SCHEMATIC, PWA PROCESSOR	A
ENGINEER	SHEET 1 OF 2	TITLE	E4401-60088
DRAWN BY	SIZE D	DATAWARE	PLOT NUMBER
BA3940	A3940	1 2	D-E4401-60088-1

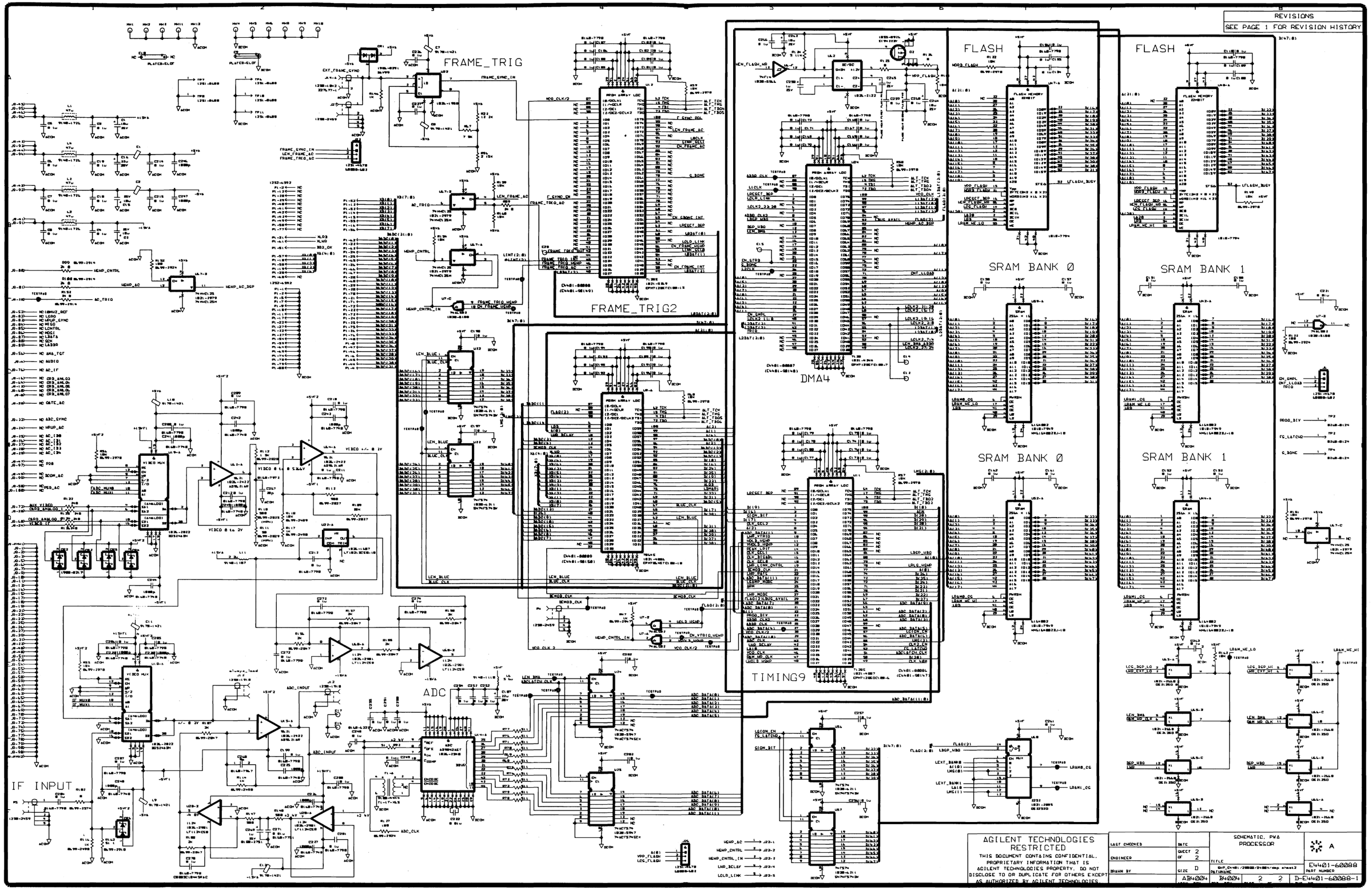

REVISIONS

SEE PAGE 1 FOR REVISION HISTORY

AGILENT TECHNOLOGIES
RESTRICTED
THIS DOCUMENT CONTAINS CONFIDENTIAL. PROPRIETARY INFORMATION THAT IS AGILENT TECHNOLOGIES PROPERTY. DO NOT DISCLOSE TO OR DUPLICATE FOR OTHERS EXCEPT AS AUTHORIZED BY AGILENT TECHNOLOGIES.

LAST CHECKED	DATE	SCHEMATIC, PWA PROCESSOR	A
ENGINEER	SHEET 2 OF 2	TITLE	E4401-60088
DRAWN BY	SIZE D	PART NUMBER	
AB4024	AB4024	2 2	D-E4401-60088-1

Component-Level Information Packet for E4401-60224

Digital Demod RF

Agilent Technologies

Agilent Part Number: E4401-90294
Printed in Malaysia April 2001

Notice

The information contained in this document is subject to change without notice. Agilent Technologies makes no warranty of any kind with regard to this material, including but not limited to, the implied warranties of merchantability and fitness for a particular purpose. Agilent Technologies shall not be liable for errors contained herein or for incidental or consequential damages in connection with the furnishing, performance, or use of this material.

© Copyright Agilent Technologies Inc. 2000, 2001
All Rights Reserved. Reproduction, adaptation, or translation without prior written permission is prohibited, except as allowed under the copyright laws.

Agilent Part Number E4401-60224
Digital Demod RF

Reference Designator	Agilent Part Number	Qty	Description	Mgr Code	Mfr Part Number
C302	0160-7798	1	CAP-FXD 0.1uF +-10% 50 V CER X7R	06352	C2012X7R1H104K
C465	0160-7751	1	CAP-FXD 0.01uF +-10% 50 V CER X7R	02010	06035C103KAT
C466	0160-7751	1	CAP-FXD 0.01uF +-10% 50 V CER X7R	02010	06035C103KAT
C467	0160-7751	1	CAP-FXD 0.01uF +-10% 50 V CER X7R	02010	06035C103KAT
C468	0160-7751	1	CAP-FXD 0.01uF +-10% 50 V CER X7R	02010	06035C103KAT
C469	0160-7828	1	CAP-FXD 0.1uF +-10% 16 V CER X7R	02010	0603YC104KATA
C470	0160-7828	1	CAP-FXD 0.1uF +-10% 16 V CER X7R	02010	0603YC104KATA
C471	0160-7828	1	CAP-FXD 0.1uF +-10% 16 V CER X7R	02010	0603YC104KATA
C472	0160-7828	1	CAP-FXD 0.1uF +-10% 16 V CER X7R	02010	0603YC104KATA
C473	0160-7828	1	CAP-FXD 0.1uF +-10% 16 V CER X7R	02010	0603YC104KATA
C474	0180-4287	1	CAP-FXD 10uF +-20% 35 V TA	02010	TAJD106M035
C475	0180-4287	1	CAP-FXD 10uF +-20% 35 V TA	02010	TAJD106M035
C478	0180-4287	1	CAP-FXD 10uF +-20% 35 V TA	02010	TAJD106M035
C479	0180-4287	1	CAP-FXD 10uF +-20% 35 V TA	02010	TAJD106M035
C481	0180-4758	1	CAP-FXD 47uF +-20% 20 V TA	12340	T491D476M020AS
C483	0180-4758	1	CAP-FXD 47uF +-20% 20 V TA	12340	T491D476M020AS
C484	0180-4758	1	CAP-FXD 47uF +-20% 20 V TA	12340	T491D476M020AS
C485	0180-4758	1	CAP-FXD 47uF +-20% 20 V TA	12340	T491D476M020AS
C486	0180-4758	1	CAP-FXD 47uF +-20% 20 V TA	12340	T491D476M020AS
C488	0180-4758	1	CAP-FXD 47uF +-20% 20 V TA	12340	T491D476M020AS
C489	0180-4116	1	CAP-FXD 22uF +-20% 20 V TA	02010	TAJD226M020
C490	0180-3751	1	CAP-FXD 1uF +-20% 35 V TA	02010	TAJB105M035
C491	0160-7736	1	CAP-FXD 1uF +-10% 16 V CER X7R	06352	C3216X7R1C105K
C492	0160-7736	1	CAP-FXD 1uF +-10% 16 V CER X7R	06352	C3216X7R1C105K
C493	0160-7736	1	CAP-FXD 1uF +-10% 16 V CER X7R	06352	C3216X7R1C105K
C494	0160-7736	1	CAP-FXD 1uF +-10% 16 V CER X7R	06352	C3216X7R1C105K
C495	0160-7989	1	CAP-FXD 36pF +-5% 50 V CER C0G	06352	C1608COG1H360J
C500	0160-7988	1	CAP-FXD 470pF +-5% 50 V CER C0G	06352	C1608COG1H471J

Agilent Part Number E4401-60224
Digital Demod RF

Reference Designator	Agilent Part Number	Qty	Description	Mgr Code	Mfr Part Number
C501	0160-7988	1	CAP-FXD 470pF +-5% 50 V CER C0G	06352	C1608COG1H471J
C502	0160-7988	1	CAP-FXD 470pF +-5% 50 V CER C0G	06352	C1608COG1H471J
C503	0160-7988	1	CAP-FXD 470pF +-5% 50 V CER C0G	06352	C1608COG1H471J
C504	0160-7988	1	CAP-FXD 470pF +-5% 50 V CER C0G	06352	C1608COG1H471J
C505	0160-7988	1	CAP-FXD 470pF +-5% 50 V CER C0G	06352	C1608COG1H471J
C506	0160-7988	1	CAP-FXD 470pF +-5% 50 V CER C0G	06352	C1608COG1H471J
C507	0160-7988	1	CAP-FXD 470pF +-5% 50 V CER C0G	06352	C1608COG1H471J
C508	0160-7977	1	CAP-FXD 75pF +-5% 50 V CER C0G	06352	C1608COG1H750J
C510	0160-7853	1	CAP-FXD 3.3pF +-7.6% 50 V CER C0G	02010	06035A3R3CAT
C511	0160-7845	1	CAP-FXD 180pF +-5% 50 V CER C0G	02010	06035A181JAT
C512	0160-7835	1	CAP-FXD 100pF +-5% 50 V CER C0G	02010	06035A101JAT
C513	0160-7835	1	CAP-FXD 100pF +-5% 50 V CER C0G	02010	06035A101JAT
C514	0160-7828	1	CAP-FXD 0.1uF +-10% 16 V CER X7R	02010	0603YC104KATA
C518	0160-7828	1	CAP-FXD 0.1uF +-10% 16 V CER X7R	02010	0603YC104KATA
C519	0160-7828	1	CAP-FXD 0.1uF +-10% 16 V CER X7R	02010	0603YC104KATA
C520	0160-7828	1	CAP-FXD 0.1uF +-10% 16 V CER X7R	02010	0603YC104KATA
C522	0160-7828	1	CAP-FXD 0.1uF +-10% 16 V CER X7R	02010	0603YC104KATA
C523	0160-7828	1	CAP-FXD 0.1uF +-10% 16 V CER X7R	02010	0603YC104KATA
C524	0160-7828	1	CAP-FXD 0.1uF +-10% 16 V CER X7R	02010	0603YC104KATA
C526	0160-7828	1	CAP-FXD 0.1uF +-10% 16 V CER X7R	02010	0603YC104KATA
C527	0160-7828	1	CAP-FXD 0.1uF +-10% 16 V CER X7R	02010	0603YC104KATA
C528	0160-7828	1	CAP-FXD 0.1uF +-10% 16 V CER X7R	02010	0603YC104KATA
C529	0160-7828	1	CAP-FXD 0.1uF +-10% 16 V CER X7R	02010	0603YC104KATA
C530	0160-7828	1	CAP-FXD 0.1uF +-10% 16 V CER X7R	02010	0603YC104KATA
C531	0160-7798	1	CAP-FXD 0.1uF +-10% 50 V CER X7R	06352	C2012X7R1H104K
C532	0160-7798	1	CAP-FXD 0.1uF +-10% 50 V CER X7R	06352	C2012X7R1H104K
C533	0160-7828	1	CAP-FXD 0.1uF +-10% 16 V CER X7R	02010	0603YC104KATA
C534	0160-7828	1	CAP-FXD 0.1uF +-10% 16 V CER X7R	02010	0603YC104KATA
C535	0160-7828	1	CAP-FXD 0.1uF +-10% 16 V CER X7R	02010	0603YC104KATA
C536	0160-7828	1	CAP-FXD 0.1uF +-10% 16 V CER X7R	02010	0603YC104KATA

 **Indicates factory-selected value*

Agilent Part Number E4401-60224
Digital Demod RF

Reference Designator	Agilent Part Number	Qty	Description	Mgr Code	Mfr Part Number
C537	0160-7828	1	CAP-FXD 0.1uF +-10% 16 V CER X7R	02010	0603YC104KATA
C538	0160-7828	1	CAP-FXD 0.1uF +-10% 16 V CER X7R	02010	0603YC104KATA
C539	0160-7828	1	CAP-FXD 0.1uF +-10% 16 V CER X7R	02010	0603YC104KATA
C540	0160-7828	1	CAP-FXD 0.1uF +-10% 16 V CER X7R	02010	0603YC104KATA
C541	0160-7828	1	CAP-FXD 0.1uF +-10% 16 V CER X7R	02010	0603YC104KATA
C542	0160-7828	1	CAP-FXD 0.1uF +-10% 16 V CER X7R	02010	0603YC104KATA
C543	0160-7828	1	CAP-FXD 0.1uF +-10% 16 V CER X7R	02010	0603YC104KATA
C544	0160-7828	1	CAP-FXD 0.1uF +-10% 16 V CER X7R	02010	0603YC104KATA
C545	0160-7828	1	CAP-FXD 0.1uF +-10% 16 V CER X7R	02010	0603YC104KATA
C546	0160-7828	1	CAP-FXD 0.1uF +-10% 16 V CER X7R	02010	0603YC104KATA
C547	0160-7828	1	CAP-FXD 0.1uF +-10% 16 V CER X7R	02010	0603YC104KATA
C548	0160-7828	1	CAP-FXD 0.1uF +-10% 16 V CER X7R	02010	0603YC104KATA
C549	0160-7828	1	CAP-FXD 0.1uF +-10% 16 V CER X7R	02010	0603YC104KATA
C551	0160-7828	1	CAP-FXD 0.1uF +-10% 16 V CER X7R	02010	0603YC104KATA
C552	0160-7828	1	CAP-FXD 0.1uF +-10% 16 V CER X7R	02010	0603YC104KATA
C553	0160-7828	1	CAP-FXD 0.1uF +-10% 16 V CER X7R	02010	0603YC104KATA
C554	0160-7828	1	CAP-FXD 0.1uF +-10% 16 V CER X7R	02010	0603YC104KATA
C555	0160-7828	1	CAP-FXD 0.1uF +-10% 16 V CER X7R	02010	0603YC104KATA
C556	0160-7828	1	CAP-FXD 0.1uF +-10% 16 V CER X7R	02010	0603YC104KATA
C557	0160-7828	1	CAP-FXD 0.1uF +-10% 16 V CER X7R	02010	0603YC104KATA
C558	0160-7798	1	CAP-FXD 0.1uF +-10% 50 V CER X7R	06352	C2012X7R1H104K
C559	0160-7798	1	CAP-FXD 0.1uF +-10% 50 V CER X7R	06352	C2012X7R1H104K
C560	0160-7828	1	CAP-FXD 0.1uF +-10% 16 V CER X7R	02010	0603YC104KATA
C561	0160-7828	1	CAP-FXD 0.1uF +-10% 16 V CER X7R	02010	0603YC104KATA
C562	0160-7828	1	CAP-FXD 0.1uF +-10% 16 V CER X7R	02010	0603YC104KATA
C563	0160-7828	1	CAP-FXD 0.1uF +-10% 16 V CER X7R	02010	0603YC104KATA
C564	0160-7781	1	CAP-FXD 2200pF +-10% 50 V CER X7R	02010	06035C222KAT
C565	0160-7771	1	CAP-FXD 8.2pF +-3% 50 V CER C0G	02010	06035A8R2CAT
C566	0160-7766	1	CAP-FXD 820pF +-5% 50 V CER C0G	06352	C2012C0G1H821JT
C567	0160-7766	1	CAP-FXD 820pF +-5% 50 V CER C0G	06352	C2012C0G1H821JT

Agilent Part Number E4401-60224
Digital Demod RF

Reference Designator	Agilent Part Number	Qty	Description	Mgr Code	Mfr Part Number
C572	0160-7751	1	CAP-FXD 0.01uF +-10% 50 V CER X7R	02010	06035C103KAT
C573	0160-7751	1	CAP-FXD 0.01uF +-10% 50 V CER X7R	02010	06035C103KAT
C574	0160-7751	1	CAP-FXD 0.01uF +-10% 50 V CER X7R	02010	06035C103KAT
C575	0160-7751	1	CAP-FXD 0.01uF +-10% 50 V CER X7R	02010	06035C103KAT
C576	0160-7751	1	CAP-FXD 0.01uF +-10% 50 V CER X7R	02010	06035C103KAT
C577	0160-7751	1	CAP-FXD 0.01uF +-10% 50 V CER X7R	02010	06035C103KAT
C578	0160-7751	1	CAP-FXD 0.01uF +-10% 50 V CER X7R	02010	06035C103KAT
C579	0160-7751	1	CAP-FXD 0.01uF +-10% 50 V CER X7R	02010	06035C103KAT
C580	0160-7751	1	CAP-FXD 0.01uF +-10% 50 V CER X7R	02010	06035C103KAT
C581	0160-7751	1	CAP-FXD 0.01uF +-10% 50 V CER X7R	02010	06035C103KAT
C582	0160-7751	1	CAP-FXD 0.01uF +-10% 50 V CER X7R	02010	06035C103KAT
C583	0160-7751	1	CAP-FXD 0.01uF +-10% 50 V CER X7R	02010	06035C103KAT
C584	0160-7751	1	CAP-FXD 0.01uF +-10% 50 V CER X7R	02010	06035C103KAT
C585	0160-7751	1	CAP-FXD 0.01uF +-10% 50 V CER X7R	02010	06035C103KAT
C586	0160-7751	1	CAP-FXD 0.01uF +-10% 50 V CER X7R	02010	06035C103KAT
C587	0160-7751	1	CAP-FXD 0.01uF +-10% 50 V CER X7R	02010	06035C103KAT
C588	0160-7751	1	CAP-FXD 0.01uF +-10% 50 V CER X7R	02010	06035C103KAT
C589	0160-7751	1	CAP-FXD 0.01uF +-10% 50 V CER X7R	02010	06035C103KAT
C590	0160-7751	1	CAP-FXD 0.01uF +-10% 50 V CER X7R	02010	06035C103KAT
C604	0160-7749	1	CAP-FXD 22pF +-5% 50 V CER C0G	02010	06035A220JAT
C605	0160-7748	1	CAP-FXD 1000pF +-10% 50 V CER X7R	02010	06035C102KAT
C606	0160-7516	1	CAP-FXD 330pF +-5% 50 V CER C0G	06352	C1608COG1H331J
C607	0160-7516	1	CAP-FXD 330pF +-5% 50 V CER C0G	06352	C1608COG1H331J
C608	0160-7511	1	CAP-FXD 270pF +-5% 50 V CER C0G	06352	C1608COG1H271J
C609	0160-8529	1	CAP-FXD 0.047uF +-10% 25 V CER X7R	06352	C1608X7R1E473K
C610	0160-5944	1	CAP-FXD 0.047uF +-10% 50 V CER X7R	02010	08055C473KATA
C611	0160-5944	1	CAP-FXD 0.047uF +-10% 50 V CER X7R	02010	08055C473KATA
C612	0160-7798	1	CAP-FXD 0.1uF +-10% 50 V CER X7R	06352	C2012X7R1H104K
C619	0160-7828	1	CAP-FXD 0.1uF +-10% 16 V CER X7R	02010	0603YC104KATA
C621	0180-4287	1	CAP-FXD 10uF +-20% 35 V TA	02010	TAJD106M035

 **Indicates factory-selected value*

Agilent Part Number E4401-60224
Digital Demod RF

Reference Designator	Agilent Part Number	Qty	Description	Mgr Code	Mfr Part Number
C622	0180-4287	1	CAP-FXD 10uF +-20% 35 V TA	02010	TAJD106M035
C624	0180-4287	1	CAP-FXD 10uF +-20% 35 V TA	02010	TAJD106M035
C625	0180-4758	1	CAP-FXD 47uF +-20% 20 V TA	12340	T491D476M020AS
C626	0180-4287	1	CAP-FXD 10uF +-20% 35 V TA	02010	TAJD106M035
C627	0180-4287	1	CAP-FXD 10uF +-20% 35 V TA	02010	TAJD106M035
C630	0180-4758	1	CAP-FXD 47uF +-20% 20 V TA	12340	T491D476M020AS
C631	0180-4758	1	CAP-FXD 47uF +-20% 20 V TA	12340	T491D476M020AS
C632	0180-4758	1	CAP-FXD 47uF +-20% 20 V TA	12340	T491D476M020AS
C633	0180-4758	1	CAP-FXD 47uF +-20% 20 V TA	12340	T491D476M020AS
C635	0180-4758	1	CAP-FXD 47uF +-20% 20 V TA	12340	T491D476M020AS
C636	0180-4758	1	CAP-FXD 47uF +-20% 20 V TA	12340	T491D476M020AS
C637	0180-4758	1	CAP-FXD 47uF +-20% 20 V TA	12340	T491D476M020AS
C638	0180-4758	1	CAP-FXD 47uF +-20% 20 V TA	12340	T491D476M020AS
C643	0160-7798	1	CAP-FXD 0.1uF +-10% 50 V CER X7R	06352	C2012X7R1H104K
C644	0160-7736	1	CAP-FXD 1uF +-10% 16 V CER X7R	06352	C3216X7R1C105K
C645	0160-7798	1	CAP-FXD 0.1uF +-10% 50 V CER X7R	06352	C2012X7R1H104K
C647	0160-7798	1	CAP-FXD 0.1uF +-10% 50 V CER X7R	06352	C2012X7R1H104K
C648	0160-7736	1	CAP-FXD 1uF +-10% 16 V CER X7R	06352	C3216X7R1C105K
C649	0160-7798	1	CAP-FXD 0.1uF +-10% 50 V CER X7R	06352	C2012X7R1H104K
C650	0160-7988	1	CAP-FXD 470pF +-5% 50 V CER C0G	06352	C1608COG1H471J
C651	0160-7988	1	CAP-FXD 470pF +-5% 50 V CER C0G	06352	C1608COG1H471J
C652	0160-7988	1	CAP-FXD 470pF +-5% 50 V CER C0G	06352	C1608COG1H471J
C653	0160-7988	1	CAP-FXD 470pF +-5% 50 V CER C0G	06352	C1608COG1H471J
C654	0160-7988	1	CAP-FXD 470pF +-5% 50 V CER C0G	06352	C1608COG1H471J
C655	0160-7988	1	CAP-FXD 470pF +-5% 50 V CER C0G	06352	C1608COG1H471J
C664	0160-7988	1	CAP-FXD 470pF +-5% 50 V CER C0G	06352	C1608COG1H471J
C665	0160-7988	1	CAP-FXD 470pF +-5% 50 V CER C0G	06352	C1608COG1H471J
C666	0160-7988	1	CAP-FXD 470pF +-5% 50 V CER C0G	06352	C1608COG1H471J
C667	0160-7988	1	CAP-FXD 470pF +-5% 50 V CER C0G	06352	C1608COG1H471J
C668	0160-7987	1	CAP-FXD 430pF +-5% 50 V CER C0G	06352	C1608COG1H431J

Agilent Part Number E4401-60224
Digital Demod RF

Reference Designator	Agilent Part Number	Qty	Description	Mgr Code	Mfr Part Number
C669	0160-7987	1	CAP-FXD 430pF +-5% 50 V CER C0G	06352	C1608COG1H431J
C672	0160-7872	1	CAP-FXD 82pF +-5% 50 V CER C0G	02010	06035A820JAT
C673	0160-7868	1	CAP-FXD 68pF +-5% 50 V CER C0G	02010	06035A680JAT
C674	0160-7868	1	CAP-FXD 68pF +-5% 50 V CER C0G	02010	06035A680JAT
C675	0160-7850	1	CAP-FXD 27pF +-5% 50 V CER C0G	02010	06035A270JAT
C678	0160-7842	1	CAP-FXD 150pF +-5% 50 V CER C0G	02010	06035A151JAT
C679	0160-7835	1	CAP-FXD 100pF +-5% 50 V CER C0G	02010	06035A101JAT
C680	0160-7835	1	CAP-FXD 100pF +-5% 50 V CER C0G	02010	06035A101JAT
C681	0160-7835	1	CAP-FXD 100pF +-5% 50 V CER C0G	02010	06035A101JAT
C682	0160-7835	1	CAP-FXD 100pF +-5% 50 V CER C0G	02010	06035A101JAT
C683	0160-7835	1	CAP-FXD 100pF +-5% 50 V CER C0G	02010	06035A101JAT
C684	0160-7834	1	CAP-FXD 10pF +-5% 50 V CER C0G	02010	06035A100JAT
C685	0160-7834	1	CAP-FXD 10pF +-5% 50 V CER C0G	02010	06035A100JAT
C686	0160-7830	1	CAP-FXD 1pF +-25% 50 V CER C0G	12340	C0603C109C5GAC
C687	0160-7830	1	CAP-FXD 1pF +-25% 50 V CER C0G	12340	C0603C109C5GAC
C688	0160-7828	1	CAP-FXD 0.1uF +-10% 16 V CER X7R	02010	0603YC104KATA
C691	0160-7828	1	CAP-FXD 0.1uF +-10% 16 V CER X7R	02010	0603YC104KATA
C692	0160-7849	1	CAP-FXD 220pF +-5% 50 V CER C0G	02010	06035A221JAT
C693	0160-7849	1	CAP-FXD 220pF +-5% 50 V CER C0G	02010	06035A221JAT
C695	0160-7828	1	CAP-FXD 0.1uF +-10% 16 V CER X7R	02010	0603YC104KATA
C696	0160-7828	1	CAP-FXD 0.1uF +-10% 16 V CER X7R	02010	0603YC104KATA
C697	0160-7828	1	CAP-FXD 0.1uF +-10% 16 V CER X7R	02010	0603YC104KATA
C707	0160-7828	1	CAP-FXD 0.1uF +-10% 16 V CER X7R	02010	0603YC104KATA
C708	0160-7828	1	CAP-FXD 0.1uF +-10% 16 V CER X7R	02010	0603YC104KATA
C709	0160-7828	1	CAP-FXD 0.1uF +-10% 16 V CER X7R	02010	0603YC104KATA
C711	0160-7828	1	CAP-FXD 0.1uF +-10% 16 V CER X7R	02010	0603YC104KATA
C712	0160-7828	1	CAP-FXD 0.1uF +-10% 16 V CER X7R	02010	0603YC104KATA
C713	0160-7828	1	CAP-FXD 0.1uF +-10% 16 V CER X7R	02010	0603YC104KATA
C714	0160-7798	1	CAP-FXD 0.1uF +-10% 50 V CER X7R	06352	C2012X7R1H104K
C715	0160-7798	1	CAP-FXD 0.1uF +-10% 50 V CER X7R	06352	C2012X7R1H104K

 **Indicates factory-selected value*

Agilent Part Number E4401-60224
Digital Demod RF

Reference Designator	Agilent Part Number	Qty	Description	Mgr Code	Mfr Part Number
C719	0160-7828	1	CAP-FXD 0.1uF +-10% 16 V CER X7R	02010	0603YC104KATA
C720	0160-7828	1	CAP-FXD 0.1uF +-10% 16 V CER X7R	02010	0603YC104KATA
C721	0160-7828	1	CAP-FXD 0.1uF +-10% 16 V CER X7R	02010	0603YC104KATA
C722	0160-7828	1	CAP-FXD 0.1uF +-10% 16 V CER X7R	02010	0603YC104KATA
C723	0160-7828	1	CAP-FXD 0.1uF +-10% 16 V CER X7R	02010	0603YC104KATA
C725	0160-7828	1	CAP-FXD 0.1uF +-10% 16 V CER X7R	02010	0603YC104KATA
C726	0160-7828	1	CAP-FXD 0.1uF +-10% 16 V CER X7R	02010	0603YC104KATA
C727	0160-7828	1	CAP-FXD 0.1uF +-10% 16 V CER X7R	02010	0603YC104KATA
C728	0160-7828	1	CAP-FXD 0.1uF +-10% 16 V CER X7R	02010	0603YC104KATA
C729	0160-7798	1	CAP-FXD 0.1uF +-10% 50 V CER X7R	06352	C2012X7R1H104K
C730	0160-7798	1	CAP-FXD 0.1uF +-10% 50 V CER X7R	06352	C2012X7R1H104K
C731	0160-7828	1	CAP-FXD 0.1uF +-10% 16 V CER X7R	02010	0603YC104KATA
C733	0160-7828	1	CAP-FXD 0.1uF +-10% 16 V CER X7R	02010	0603YC104KATA
C734	0160-7828	1	CAP-FXD 0.1uF +-10% 16 V CER X7R	02010	0603YC104KATA
C735	0160-7828	1	CAP-FXD 0.1uF +-10% 16 V CER X7R	02010	0603YC104KATA
C736	0160-7828	1	CAP-FXD 0.1uF +-10% 16 V CER X7R	02010	0603YC104KATA
C737	0160-7828	1	CAP-FXD 0.1uF +-10% 16 V CER X7R	02010	0603YC104KATA
C738	0160-7828	1	CAP-FXD 0.1uF +-10% 16 V CER X7R	02010	0603YC104KATA
C739	0160-7828	1	CAP-FXD 0.1uF +-10% 16 V CER X7R	02010	0603YC104KATA
C740	0160-7828	1	CAP-FXD 0.1uF +-10% 16 V CER X7R	02010	0603YC104KATA
C741	0160-7828	1	CAP-FXD 0.1uF +-10% 16 V CER X7R	02010	0603YC104KATA
C742	0160-7828	1	CAP-FXD 0.1uF +-10% 16 V CER X7R	02010	0603YC104KATA
C743	0160-7828	1	CAP-FXD 0.1uF +-10% 16 V CER X7R	02010	0603YC104KATA
C744	0160-7828	1	CAP-FXD 0.1uF +-10% 16 V CER X7R	02010	0603YC104KATA
C745	0160-7828	1	CAP-FXD 0.1uF +-10% 16 V CER X7R	02010	0603YC104KATA
C746	0160-7828	1	CAP-FXD 0.1uF +-10% 16 V CER X7R	02010	0603YC104KATA
C747	0160-7828	1	CAP-FXD 0.1uF +-10% 16 V CER X7R	02010	0603YC104KATA
C748	0160-7828	1	CAP-FXD 0.1uF +-10% 16 V CER X7R	02010	0603YC104KATA
C749	0160-7828	1	CAP-FXD 0.1uF +-10% 16 V CER X7R	02010	0603YC104KATA
C750	0160-7828	1	CAP-FXD 0.1uF +-10% 16 V CER X7R	02010	0603YC104KATA

Agilent Part Number E4401-60224
Digital Demod RF

Reference Designator	Agilent Part Number	Qty	Description	Mgr Code	Mfr Part Number
C751	0160-7828	1	CAP-FXD 0.1uF +-10% 16 V CER X7R	02010	0603YC104KATA
C753	0160-7798	1	CAP-FXD 0.1uF +-10% 50 V CER X7R	06352	C2012X7R1H104K
C754	0160-7828	1	CAP-FXD 0.1uF +-10% 16 V CER X7R	02010	0603YC104KATA
C755	0160-7828	1	CAP-FXD 0.1uF +-10% 16 V CER X7R	02010	0603YC104KATA
C756	0160-7828	1	CAP-FXD 0.1uF +-10% 16 V CER X7R	02010	0603YC104KATA
C757	0160-7828	1	CAP-FXD 0.1uF +-10% 16 V CER X7R	02010	0603YC104KATA
C758	0160-7798	1	CAP-FXD 0.1uF +-10% 50 V CER X7R	06352	C2012X7R1H104K
C759	0160-7798	1	CAP-FXD 0.1uF +-10% 50 V CER X7R	06352	C2012X7R1H104K
C760	0160-7828	1	CAP-FXD 0.1uF +-10% 16 V CER X7R	02010	0603YC104KATA
C762	0160-7828	1	CAP-FXD 0.1uF +-10% 16 V CER X7R	02010	0603YC104KATA
C763	0160-7828	1	CAP-FXD 0.1uF +-10% 16 V CER X7R	02010	0603YC104KATA
C764	0160-7828	1	CAP-FXD 0.1uF +-10% 16 V CER X7R	02010	0603YC104KATA
C765	0160-7828	1	CAP-FXD 0.1uF +-10% 16 V CER X7R	02010	0603YC104KATA
C766	0160-7828	1	CAP-FXD 0.1uF +-10% 16 V CER X7R	02010	0603YC104KATA
C767	0160-7828	1	CAP-FXD 0.1uF +-10% 16 V CER X7R	02010	0603YC104KATA
C768	0160-7828	1	CAP-FXD 0.1uF +-10% 16 V CER X7R	02010	0603YC104KATA
C769	0160-7828	1	CAP-FXD 0.1uF +-10% 16 V CER X7R	02010	0603YC104KATA
C770	0160-7828	1	CAP-FXD 0.1uF +-10% 16 V CER X7R	02010	0603YC104KATA
C771	0160-7828	1	CAP-FXD 0.1uF +-10% 16 V CER X7R	02010	0603YC104KATA
C772	0160-7828	1	CAP-FXD 0.1uF +-10% 16 V CER X7R	02010	0603YC104KATA
C773	0160-7828	1	CAP-FXD 0.1uF +-10% 16 V CER X7R	02010	0603YC104KATA
C774	0160-7828	1	CAP-FXD 0.1uF +-10% 16 V CER X7R	02010	0603YC104KATA
C775	0160-7828	1	CAP-FXD 0.1uF +-10% 16 V CER X7R	02010	0603YC104KATA
C776	0160-7828	1	CAP-FXD 0.1uF +-10% 16 V CER X7R	02010	0603YC104KATA
C777	0160-7828	1	CAP-FXD 0.1uF +-10% 16 V CER X7R	02010	0603YC104KATA
C778	0160-7828	1	CAP-FXD 0.1uF +-10% 16 V CER X7R	02010	0603YC104KATA
C779	0160-7828	1	CAP-FXD 0.1uF +-10% 16 V CER X7R	02010	0603YC104KATA
C780	0160-7828	1	CAP-FXD 0.1uF +-10% 16 V CER X7R	02010	0603YC104KATA
C781	0160-7798	1	CAP-FXD 0.1uF +-10% 50 V CER X7R	06352	C2012X7R1H104K
C782	0160-7798	1	CAP-FXD 0.1uF +-10% 50 V CER X7R	06352	C2012X7R1H104K

 **Indicates factory-selected value*

Agilent Part Number E4401-60224
Digital Demod RF

Reference Designator	Agilent Part Number	Qty	Description	Mgr Code	Mfr Part Number
C786	0160-7736	1	CAP-FXD 1uF +-10% 16 V CER X7R	06352	C3216X7R1C105K
C787	0160-7751	1	CAP-FXD 0.01uF +-10% 50 V CER X7R	02010	06035C103KAT
C788	0160-7751	1	CAP-FXD 0.01uF +-10% 50 V CER X7R	02010	06035C103KAT
C789	0160-7751	1	CAP-FXD 0.01uF +-10% 50 V CER X7R	02010	06035C103KAT
C790	0160-7751	1	CAP-FXD 0.01uF +-10% 50 V CER X7R	02010	06035C103KAT
C791	0160-7751	1	CAP-FXD 0.01uF +-10% 50 V CER X7R	02010	06035C103KAT
C792	0160-7751	1	CAP-FXD 0.01uF +-10% 50 V CER X7R	02010	06035C103KAT
C793	0160-7751	1	CAP-FXD 0.01uF +-10% 50 V CER X7R	02010	06035C103KAT
C794	0160-7751	1	CAP-FXD 0.01uF +-10% 50 V CER X7R	02010	06035C103KAT
C795	0160-7751	1	CAP-FXD 0.01uF +-10% 50 V CER X7R	02010	06035C103KAT
C796	0160-7751	1	CAP-FXD 0.01uF +-10% 50 V CER X7R	02010	06035C103KAT
C797	0160-7751	1	CAP-FXD 0.01uF +-10% 50 V CER X7R	02010	06035C103KAT
C798	0160-7751	1	CAP-FXD 0.01uF +-10% 50 V CER X7R	02010	06035C103KAT
C799	0160-7751	1	CAP-FXD 0.01uF +-10% 50 V CER X7R	02010	06035C103KAT
C800	0160-7751	1	CAP-FXD 0.01uF +-10% 50 V CER X7R	02010	06035C103KAT
C801	0160-7751	1	CAP-FXD 0.01uF +-10% 50 V CER X7R	02010	06035C103KAT
C813	0160-7751	1	CAP-FXD 0.01uF +-10% 50 V CER X7R	02010	06035C103KAT
C814	0160-7751	1	CAP-FXD 0.01uF +-10% 50 V CER X7R	02010	06035C103KAT
C815	0160-7751	1	CAP-FXD 0.01uF +-10% 50 V CER X7R	02010	06035C103KAT
C816	0160-7751	1	CAP-FXD 0.01uF +-10% 50 V CER X7R	02010	06035C103KAT
C817	0160-7751	1	CAP-FXD 0.01uF +-10% 50 V CER X7R	02010	06035C103KAT
C818	0160-7751	1	CAP-FXD 0.01uF +-10% 50 V CER X7R	02010	06035C103KAT
C819	0160-7751	1	CAP-FXD 0.01uF +-10% 50 V CER X7R	02010	06035C103KAT
C820	0160-7751	1	CAP-FXD 0.01uF +-10% 50 V CER X7R	02010	06035C103KAT
C829	0160-7751	1	CAP-FXD 0.01uF +-10% 50 V CER X7R	02010	06035C103KAT
C832	0160-7751	1	CAP-FXD 0.01uF +-10% 50 V CER X7R	02010	06035C103KAT
C858	0160-7751	1	CAP-FXD 0.01uF +-10% 50 V CER X7R	02010	06035C103KAT
C859	0160-7751	1	CAP-FXD 0.01uF +-10% 50 V CER X7R	02010	06035C103KAT
C860	0160-7751	1	CAP-FXD 0.01uF +-10% 50 V CER X7R	02010	06035C103KAT
C861	0160-7751	1	CAP-FXD 0.01uF +-10% 50 V CER X7R	02010	06035C103KAT

Agilent Part Number E4401-60224
Digital Demod RF

Reference Designator	Agilent Part Number	Qty	Description	Mgr Code	Mfr Part Number
C862	0160-7751	1	CAP-FXD 0.01uF +-10% 50 V CER X7R	02010	06035C103KAT
C863	0160-7751	1	CAP-FXD 0.01uF +-10% 50 V CER X7R	02010	06035C103KAT
C864	0160-7751	1	CAP-FXD 0.01uF +-10% 50 V CER X7R	02010	06035C103KAT
C865	0160-7751	1	CAP-FXD 0.01uF +-10% 50 V CER X7R	02010	06035C103KAT
C866	0160-7751	1	CAP-FXD 0.01uF +-10% 50 V CER X7R	02010	06035C103KAT
C884	0160-7751	1	CAP-FXD 0.01uF +-10% 50 V CER X7R	02010	06035C103KAT
C885	0160-7751	1	CAP-FXD 0.01uF +-10% 50 V CER X7R	02010	06035C103KAT
C890	0160-7751	1	CAP-FXD 0.01uF +-10% 50 V CER X7R	02010	06035C103KAT
C891	0160-7751	1	CAP-FXD 0.01uF +-10% 50 V CER X7R	02010	06035C103KAT
C892	0160-7751	1	CAP-FXD 0.01uF +-10% 50 V CER X7R	02010	06035C103KAT
C893	0160-7751	1	CAP-FXD 0.01uF +-10% 50 V CER X7R	02010	06035C103KAT
C894	0160-7751	1	CAP-FXD 0.01uF +-10% 50 V CER X7R	02010	06035C103KAT
C895	0160-7751	1	CAP-FXD 0.01uF +-10% 50 V CER X7R	02010	06035C103KAT
C896	0160-7748	1	CAP-FXD 1000pF +-10% 50 V CER X7R	02010	06035C102KAT
C897	0160-7748	1	CAP-FXD 1000pF +-10% 50 V CER X7R	02010	06035C102KAT
C898	0160-7751	1	CAP-FXD 0.01uF +-10% 50 V CER X7R	02010	06035C103KAT
C899	0160-7751	1	CAP-FXD 0.01uF +-10% 50 V CER X7R	02010	06035C103KAT
C900	0160-7751	1	CAP-FXD 0.01uF +-10% 50 V CER X7R	02010	06035C103KAT
C901	0160-7751	1	CAP-FXD 0.01uF +-10% 50 V CER X7R	02010	06035C103KAT
C902	0160-7748	1	CAP-FXD 1000pF +-10% 50 V CER X7R	02010	06035C102KAT
C903	0160-7748	1	CAP-FXD 1000pF +-10% 50 V CER X7R	02010	06035C102KAT
C904	0160-7748	1	CAP-FXD 1000pF +-10% 50 V CER X7R	02010	06035C102KAT
C906	0160-7751	1	CAP-FXD 0.01uF +-10% 50 V CER X7R	02010	06035C103KAT
C908	0160-7853	1	CAP-FXD 3.3pF +-7.6% 50 V CER C0G	02010	06035A3R3CAT
C909	0160-7853	1	CAP-FXD 3.3pF +-7.6% 50 V CER C0G	02010	06035A3R3CAT
C910	0160-7792	1	CAP-FXD 18pF +-5% 50 V CER C0G	02010	06035A180JAT
C911	0160-7792	1	CAP-FXD 18pF +-5% 50 V CER C0G	02010	06035A180JAT
C912	0160-7516	1	CAP-FXD 330pF +-5% 50 V CER C0G	06352	C1608COG1H331J
C913	0160-7516	1	CAP-FXD 330pF +-5% 50 V CER C0G	06352	C1608COG1H331J

 **Indicates factory-selected value*

Agilent Part Number E4401-60224
Digital Demod RF

Reference Designator	Agilent Part Number	Qty	Description	Mgr Code	Mfr Part Number
C920	0160-6108	1	CAP-FXD 4700pF +-5% 50 V CER C0G	09939	GRM42-6COG472J050B
C921	0160-6108	1	CAP-FXD 4700pF +-5% 50 V CER C0G	09939	GRM42-6COG472J050B
C922	0160-6108	1	CAP-FXD 4700pF +-5% 50 V CER C0G	09939	GRM42-6COG472J050B
C923	0160-6108	1	CAP-FXD 4700pF +-5% 50 V CER C0G	09939	GRM42-6COG472J050B
C924	0160-6108	1	CAP-FXD 4700pF +-5% 50 V CER C0G	09939	GRM42-6COG472J050B
C925	0160-6108	1	CAP-FXD 4700pF +-5% 50 V CER C0G	09939	GRM42-6COG472J050B
C927	0160-5949	1	CAP-FXD 680pF +-5% 50 V CER C0G	06352	C2012COG1H681J
C928	0160-5949	1	CAP-FXD 680pF +-5% 50 V CER C0G	06352	C2012COG1H681J
C929	0160-5949	1	CAP-FXD 680pF +-5% 50 V CER C0G	06352	C2012COG1H681J
C930	0160-5949	1	CAP-FXD 680pF +-5% 50 V CER C0G	06352	C2012COG1H681J
C939	0180-4287	1	CAP-FXD 10uF +-20% 35 V TA	02010	TAJD106M035
C940	0180-4758	1	CAP-FXD 47uF +-20% 20 V TA	12340	T491D476M020AS
C941	0160-7855	1	CAP-FXD 33pF +-5% 50 V CER C0G	02010	06035A330JAT
C942	0160-7835	1	CAP-FXD 100pF +-5% 50 V CER C0G	02010	06035A101JAT
C943	0160-7835	1	CAP-FXD 100pF +-5% 50 V CER C0G	02010	06035A101JAT
C945	0160-7828	1	CAP-FXD 0.1uF +-10% 16 V CER X7R	02010	0603YC104KATA
C946	0160-7828	1	CAP-FXD 0.1uF +-10% 16 V CER X7R	02010	0603YC104KATA
C947	0160-7828	1	CAP-FXD 0.1uF +-10% 16 V CER X7R	02010	0603YC104KATA
C948	0160-7828	1	CAP-FXD 0.1uF +-10% 16 V CER X7R	02010	0603YC104KATA
C949	0160-7828	1	CAP-FXD 0.1uF +-10% 16 V CER X7R	02010	0603YC104KATA
C950	0160-7828	1	CAP-FXD 0.1uF +-10% 16 V CER X7R	02010	0603YC104KATA
C951	0160-7828	1	CAP-FXD 0.1uF +-10% 16 V CER X7R	02010	0603YC104KATA
C952	0160-7828	1	CAP-FXD 0.1uF +-10% 16 V CER X7R	02010	0603YC104KATA
C953	0160-7828	1	CAP-FXD 0.1uF +-10% 16 V CER X7R	02010	0603YC104KATA
C954	0160-7828	1	CAP-FXD 0.1uF +-10% 16 V CER X7R	02010	0603YC104KATA
C955	0160-7828	1	CAP-FXD 0.1uF +-10% 16 V CER X7R	02010	0603YC104KATA

Agilent Part Number E4401-60224
Digital Demod RF

Reference Designator	Agilent Part Number	Qty	Description	Mgr Code	Mfr Part Number
C956	0160-7828	1	CAP-FXD 0.1uF +-10% 16 V CER X7R	02010	0603YC104KATA
C957	0160-7828	1	CAP-FXD 0.1uF +-10% 16 V CER X7R	02010	0603YC104KATA
C958	0160-7828	1	CAP-FXD 0.1uF +-10% 16 V CER X7R	02010	0603YC104KATA
C959	0160-7828	1	CAP-FXD 0.1uF +-10% 16 V CER X7R	02010	0603YC104KATA
C960	0160-7828	1	CAP-FXD 0.1uF +-10% 16 V CER X7R	02010	0603YC104KATA
C961	0160-7828	1	CAP-FXD 0.1uF +-10% 16 V CER X7R	02010	0603YC104KATA
C962	0160-7798	1	CAP-FXD 0.1uF +-10% 50 V CER X7R	06352	C2012X7R1H104K
C963	0160-7798	1	CAP-FXD 0.1uF +-10% 50 V CER X7R	06352	C2012X7R1H104K
C964	0160-7751	1	CAP-FXD 0.01uF +-10% 50 V CER X7R	02010	06035C103KAT
C965	0160-7751	1	CAP-FXD 0.01uF +-10% 50 V CER X7R	02010	06035C103KAT
C968	0160-7751	1	CAP-FXD 0.01uF +-10% 50 V CER X7R	02010	06035C103KAT
C969	0160-7736	1	CAP-FXD 1uF +-10% 16 V CER X7R	06352	C3216X7R1C105K
C970	0160-7751	1	CAP-FXD 0.01uF +-10% 50 V CER X7R	02010	06035C103KAT
C971	0160-7751	1	CAP-FXD 0.01uF +-10% 50 V CER X7R	02010	06035C103KAT
C973	0160-7736	1	CAP-FXD 1uF +-10% 16 V CER X7R	06352	C3216X7R1C105K
C974	0160-7511	1	CAP-FXD 270pF +-5% 50 V CER C0G	06352	C1608COG1H271J
C975	0180-4758	1	CAP-FXD 47uF +-20% 20 V TA	12340	T491D476M020AS
C976	0180-4758	1	CAP-FXD 47uF +-20% 20 V TA	12340	T491D476M020AS
C979	0160-7751	1	CAP-FXD 0.01uF +-10% 50 V CER X7R	02010	06035C103KAT
C980	0160-7751	1	CAP-FXD 0.01uF +-10% 50 V CER X7R	02010	06035C103KAT
C981	0160-7751	1	CAP-FXD 0.01uF +-10% 50 V CER X7R	02010	06035C103KAT
C982	0160-7751	1	CAP-FXD 0.01uF +-10% 50 V CER X7R	02010	06035C103KAT
C983	0160-7751	1	CAP-FXD 0.01uF +-10% 50 V CER X7R	02010	06035C103KAT
C984	0160-7751	1	CAP-FXD 0.01uF +-10% 50 V CER X7R	02010	06035C103KAT
C985	0160-7751	1	CAP-FXD 0.01uF +-10% 50 V CER X7R	02010	06035C103KAT
C986	0160-7751	1	CAP-FXD 0.01uF +-10% 50 V CER X7R	02010	06035C103KAT
C987	0160-7751	1	CAP-FXD 0.01uF +-10% 50 V CER X7R	02010	06035C103KAT
C988	0160-7751	1	CAP-FXD 0.01uF +-10% 50 V CER X7R	02010	06035C103KAT
C989	0160-7751	1	CAP-FXD 0.01uF +-10% 50 V CER X7R	02010	06035C103KAT
C990	0160-7751	1	CAP-FXD 0.01uF +-10% 50 V CER X7R	02010	06035C103KAT

 **Indicates factory-selected value*

Agilent Part Number E4401-60224
Digital Demod RF

Reference Designator	Agilent Part Number	Qty	Description	Mgr Code	Mfr Part Number
C991	0160-7828	1	CAP-FXD 0.1uF +-10% 16 V CER X7R	02010	0603YC104KATA
C992	0160-7828	1	CAP-FXD 0.1uF +-10% 16 V CER X7R	02010	0603YC104KATA
C993	0180-4274	1	CAP-FXD 4.7uF +-20% 50 V TA	12340	T491D475M050AS
C994	0180-4274	1	CAP-FXD 4.7uF +-20% 50 V TA	12340	T491D475M050AS
C995	0180-4758	1	CAP-FXD 47uF +-20% 20 V TA	12340	T491D476M020AS
C996	0160-7828	1	CAP-FXD 0.1uF +-10% 16 V CER X7R	02010	0603YC104KATA
C997	0160-7828	1	CAP-FXD 0.1uF +-10% 16 V CER X7R	02010	0603YC104KATA
C998	0160-7828	1	CAP-FXD 0.1uF +-10% 16 V CER X7R	02010	0603YC104KATA
C999	0160-7828	1	CAP-FXD 0.1uF +-10% 16 V CER X7R	02010	0603YC104KATA
C1000	0160-7988	1	CAP-FXD 470pF +-5% 50 V CER C0G	06352	C1608COG1H471J
C1001	0160-7988	1	CAP-FXD 470pF +-5% 50 V CER C0G	06352	C1608COG1H471J
C1002	0160-7988	1	CAP-FXD 470pF +-5% 50 V CER C0G	06352	C1608COG1H471J
C1003	0160-7988	1	CAP-FXD 470pF +-5% 50 V CER C0G	06352	C1608COG1H471J
C1010	0160-7828	1	CAP-FXD 0.1uF +-10% 16 V CER X7R	02010	0603YC104KATA
C1011	0160-7828	1	CAP-FXD 0.1uF +-10% 16 V CER X7R	02010	0603YC104KATA
C1012	0160-7828	1	CAP-FXD 0.1uF +-10% 16 V CER X7R	02010	0603YC104KATA
C1015	0160-7828	1	CAP-FXD 0.1uF +-10% 16 V CER X7R	02010	0603YC104KATA
C1016	0160-7828	1	CAP-FXD 0.1uF +-10% 16 V CER X7R	02010	0603YC104KATA
C1017	0160-7828	1	CAP-FXD 0.1uF +-10% 16 V CER X7R	02010	0603YC104KATA
C1018	0160-7828	1	CAP-FXD 0.1uF +-10% 16 V CER X7R	02010	0603YC104KATA
C1019	0160-7828	1	CAP-FXD 0.1uF +-10% 16 V CER X7R	02010	0603YC104KATA
C1020	0160-7751	1	CAP-FXD 0.01uF +-10% 50 V CER X7R	02010	06035C103KAT
C1021	0160-7751	1	CAP-FXD 0.01uF +-10% 50 V CER X7R	02010	06035C103KAT
C1022	0160-7751	1	CAP-FXD 0.01uF +-10% 50 V CER X7R	02010	06035C103KAT
C1023	0160-7751	1	CAP-FXD 0.01uF +-10% 50 V CER X7R	02010	06035C103KAT
C1024	0160-7751	1	CAP-FXD 0.01uF +-10% 50 V CER X7R	02010	06035C103KAT
C1025	0160-7751	1	CAP-FXD 0.01uF +-10% 50 V CER X7R	02010	06035C103KAT
C1026	0160-7751	1	CAP-FXD 0.01uF +-10% 50 V CER X7R	02010	06035C103KAT
C1027	0160-7751	1	CAP-FXD 0.01uF +-10% 50 V CER X7R	02010	06035C103KAT
C1028	0160-7751	1	CAP-FXD 0.01uF +-10% 50 V CER X7R	02010	06035C103KAT

Agilent Part Number E4401-60224
Digital Demod RF

Reference Designator	Agilent Part Number	Qty	Description	Mgr Code	Mfr Part Number
C1029	0160-7751	1	CAP-FXD 0.01uF +-10% 50 V CER X7R	02010	06035C103KAT
C1030	0160-7751	1	CAP-FXD 0.01uF +-10% 50 V CER X7R	02010	06035C103KAT
C1031	0160-7751	1	CAP-FXD 0.01uF +-10% 50 V CER X7R	02010	06035C103KAT
C1032	0160-7751	1	CAP-FXD 0.01uF +-10% 50 V CER X7R	02010	06035C103KAT
C1033	0160-7751	1	CAP-FXD 0.01uF +-10% 50 V CER X7R	02010	06035C103KAT
C1034	0160-7751	1	CAP-FXD 0.01uF +-10% 50 V CER X7R	02010	06035C103KAT
C1035	0160-7751	1	CAP-FXD 0.01uF +-10% 50 V CER X7R	02010	06035C103KAT
C1038	0160-7864	1	CAP-FXD 56pF +-5% 50 V CER C0G	02010	06035A560JAT
C1039	0160-7828	1	CAP-FXD 0.1uF +-10% 16 V CER X7R	02010	0603YC104KATA
C1040	0160-7828	1	CAP-FXD 0.1uF +-10% 16 V CER X7R	02010	0603YC104KATA
C1041	0160-7736	1	CAP-FXD 1uF +-10% 16 V CER X7R	06352	C3216X7R1C105K
C1042	0160-7828	1	CAP-FXD 0.1uF +-10% 16 V CER X7R	02010	0603YC104KATA
C1043	0160-7771	1	CAP-FXD 8.2pF +-3% 50 V CER C0G	02010	06035A8R2CAT
C1044	0160-7751	1	CAP-FXD 0.01uF +-10% 50 V CER X7R	02010	06035C103KAT
C1045	0160-7736	1	CAP-FXD 1uF +-10% 16 V CER X7R	06352	C3216X7R1C105K
C1046	0160-7835	1	CAP-FXD 100pF +-5% 50 V CER C0G	02010	06035A101JAT
C1047	0160-7828	1	CAP-FXD 0.1uF +-10% 16 V CER X7R	02010	0603YC104KATA
C1048	0160-7828	1	CAP-FXD 0.1uF +-10% 16 V CER X7R	02010	0603YC104KATA
C1049	0160-7828	1	CAP-FXD 0.1uF +-10% 16 V CER X7R	02010	0603YC104KATA
C1050	0160-7828	1	CAP-FXD 0.1uF +-10% 16 V CER X7R	02010	0603YC104KATA
C1051	0160-7828	1	CAP-FXD 0.1uF +-10% 16 V CER X7R	02010	0603YC104KATA
C1052	0160-7828	1	CAP-FXD 0.1uF +-10% 16 V CER X7R	02010	0603YC104KATA
C1053	0160-7828	1	CAP-FXD 0.1uF +-10% 16 V CER X7R	02010	0603YC104KATA
C1054	0160-7828	1	CAP-FXD 0.1uF +-10% 16 V CER X7R	02010	0603YC104KATA
C1055	0160-7828	1	CAP-FXD 0.1uF +-10% 16 V CER X7R	02010	0603YC104KATA
C1056	0160-7828	1	CAP-FXD 0.1uF +-10% 16 V CER X7R	02010	0603YC104KATA
C1057	0160-7828	1	CAP-FXD 0.1uF +-10% 16 V CER X7R	02010	0603YC104KATA
C1058	0160-7751	1	CAP-FXD 0.01uF +-10% 50 V CER X7R	02010	06035C103KAT
C1059	0160-7751	1	CAP-FXD 0.01uF +-10% 50 V CER X7R	02010	06035C103KAT
C1060	0160-7751	1	CAP-FXD 0.01uF +-10% 50 V CER X7R	02010	06035C103KAT

 **Indicates factory-selected value*

Agilent Part Number E4401-60224
Digital Demod RF

Reference Designator	Agilent Part Number	Qty	Description	Mgr Code	Mfr Part Number
C1061	0160-7736	1	CAP-FXD 1uF +-10% 16 V CER X7R	06352	C3216X7R1C105K
C1062	0160-7828	1	CAP-FXD 0.1uF +-10% 16 V CER X7R	02010	0603YC104KATA
C1063	0160-7828	1	CAP-FXD 0.1uF +-10% 16 V CER X7R	02010	0603YC104KATA
C1064	0160-7828	1	CAP-FXD 0.1uF +-10% 16 V CER X7R	02010	0603YC104KATA
C1065	0160-7828	1	CAP-FXD 0.1uF +-10% 16 V CER X7R	02010	0603YC104KATA
C1070	0160-7835	1	CAP-FXD 100pF +-5% 50 V CER C0G	02010	06035A101JAT
C1071	0160-7751	1	CAP-FXD 0.01uF +-10% 50 V CER X7R	02010	06035C103KAT
C1072	0160-7828	1	CAP-FXD 0.1uF +-10% 16 V CER X7R	02010	0603YC104KATA
C1073	0160-7828	1	CAP-FXD 0.1uF +-10% 16 V CER X7R	02010	0603YC104KATA
C1074	0160-7751	1	CAP-FXD 0.01uF +-10% 50 V CER X7R	02010	06035C103KAT
C1075	0160-7828	1	CAP-FXD 0.1uF +-10% 16 V CER X7R	02010	0603YC104KATA
C1076	0160-7828	1	CAP-FXD 0.1uF +-10% 16 V CER X7R	02010	0603YC104KATA
C1077	0160-7828	1	CAP-FXD 0.1uF +-10% 16 V CER X7R	02010	0603YC104KATA
C1078	0160-8218	1	CAP-FXD 200pF +-2% 300 V PORC	03553	ATC100B201GPN3 00X
C1079	0160-7721	1	CAP-FXD 82pF +-1% 50 V CER C0G	02010	08055A820FATMA
C1080	0160-7828	1	CAP-FXD 0.1uF +-10% 16 V CER X7R	02010	0603YC104KATA
C1081	0160-7828	1	CAP-FXD 0.1uF +-10% 16 V CER X7R	02010	0603YC104KATA
C1083	0160-7751	1	CAP-FXD 0.01uF +-10% 50 V CER X7R	02010	06035C103KAT
C1084	0160-7751	1	CAP-FXD 0.01uF +-10% 50 V CER X7R	02010	06035C103KAT
C1085	0160-7751	1	CAP-FXD 0.01uF +-10% 50 V CER X7R	02010	06035C103KAT
C1086	0160-7751	1	CAP-FXD 0.01uF +-10% 50 V CER X7R	02010	06035C103KAT
C1087	0160-7751	1	CAP-FXD 0.01uF +-10% 50 V CER X7R	02010	06035C103KAT
C1088	0160-7828	1	CAP-FXD 0.1uF +-10% 16 V CER X7R	02010	0603YC104KATA
C1089	0160-7712	1	CAP-FXD 1500pF +-10% 50 V CER X7R	02010	06035C152KATRA
CR3	1906-0291	1	DIODE-DUAL 70V 100MA T0-236AA	02910	BAV99
CR5	1901-1227	1	DIODE-SWITCHING 75V 200MA 6NS TO-236	02910	BAS16
CR6	1901-1227	1	DIODE-SWITCHING 75V 200MA 6NS TO-236	02910	BAS16
CR7	1901-1227	1	DIODE-SWITCHING 75V 200MA 6NS TO-236	02910	BAS16
CR9	1900-0078	1	DIODE-SCHOTTKY SM SIG	01542	HSMS-2800

Agilent Part Number E4401-60224
Digital Demod RF

Reference Designator	Agilent Part Number	Qty	Description	Mgr Code	Mfr Part Number
CR10	1900-0072	1	DIODE-SCHOTTKY SM SIG	37793	HSMS-2820
CR11	0122-0172	1	DIODE-VVC 29PF 10% C 3/C25-MIN5	02910	BBY40
CR12	1906-0291	1	DIODE-DUAL 70V 100MA T0-236AA	02910	BAV99
CR13	1906-0291	1	DIODE-DUAL 70V 100MA T0-236AA	02910	BAV99
CR16	1906-0291	1	DIODE-DUAL 70V 100MA T0-236AA	02910	BAV99
CR20	1901-1227	1	DIODE-SWITCHING 75V 200MA 6NS TO-236	02910	BAS16
CR21	1901-1227	1	DIODE-SWITCHING 75V 200MA 6NS TO-236	02910	BAS16
CR22	1901-1227	1	DIODE-SWITCHING 75V 200MA 6NS TO-236	02910	BAS16
CR23	1901-1227	1	DIODE-SWITCHING 75V 200MA 6NS TO-236	02910	BAS16
CR24	1900-0273	1	DIODE-PIN	01542	HSMP-3892-BLK
CR25	1900-0273	1	DIODE-PIN	01542	HSMP-3892-BLK
CR30	1900-0245	1	DIODE-SCHOTTKY SM SIG	01542	HSMS-2805
CR32	0122-0172	1	DIODE-VVC 29PF 10% C 3/C25-MIN5	02910	BBY40
CR34	0122-0172	1	DIODE-VVC 29PF 10% C 3/C25-MIN5	02910	BBY40
CR35	0122-0370	1	DIODE-VVC 2.6PF BVR30V	02910	BB147
CR36	0122-0370	1	DIODE-VVC 2.6PF BVR30V	02910	BB147
CR37	0122-0370	1	DIODE-VVC 2.6PF BVR30V	02910	BB147
CR38	0122-0172	1	DIODE-VVC 29PF 10% C 3/C25-MIN5	02910	BBY40
CR40	1900-0078	1	DIODE-SCHOTTKY SM SIG	01542	HSMS-2800
CR41	1900-0078	1	DIODE-SCHOTTKY SM SIG	01542	HSMS-2800
CR42	1906-0291	1	DIODE-DUAL 70V 100MA T0-236AA	02910	BAV99
CR44	1900-0074	1	DIODE-SCHOTTKY SM SIG	01542	HSMS-2810
CR45	1900-0245	1	DIODE-SCHOTTKY SM SIG	01542	HSMS-2805
CR46	1900-0072	1	DIODE-SCHOTTKY SM SIG	37793	HSMS-2820
CR47	1900-0072	1	DIODE-SCHOTTKY SM SIG	37793	HSMS-2820
CR48	1900-0078	1	DIODE-SCHOTTKY SM SIG	01542	HSMS-2800
CR49	1900-0245	1	DIODE-SCHOTTKY SM SIG	01542	HSMS-2805
CR50	1900-0273	1	DIODE-PIN	01542	HSMP-3892-BLK
CR51	0122-0350	1	DIODE-VVC BVR14V TO-236 (SOT-23)	36633	MMBV432LT1
CR52	0122-0350	1	DIODE-VVC BVR14V TO-236 (SOT-23)	36633	MMBV432LT1

 **Indicates factory-selected value*

Agilent Part Number E4401-60224
Digital Demod RF

Reference Designator	Agilent Part Number	Qty	Description	Mgr Code	Mfr Part Number
E1	9170-1421	1	CORE-SHIELDING BEAD	06352	HF50ACB-322513
E2	9170-1584	1	CORE-SHIELDING BEAD	06352	MMZ2012Y102B
E3	9170-1584	1	CORE-SHIELDING BEAD	06352	MMZ2012Y102B
E4	9170-1584	1	CORE-SHIELDING BEAD	06352	MMZ2012Y102B
E5	9170-1584	1	CORE-SHIELDING BEAD	06352	MMZ2012Y102B
E10	9170-1584	1	CORE-SHIELDING BEAD	06352	MMZ2012Y102B
E12	9170-1584	1	CORE-SHIELDING BEAD	06352	MMZ2012Y102B
E13	9170-1584	1	CORE-SHIELDING BEAD	06352	MMZ2012Y102B
E14	9170-1584	1	CORE-SHIELDING BEAD	06352	MMZ2012Y102B
E17	9170-1584	1	CORE-SHIELDING BEAD	06352	MMZ2012Y102B
E18	9170-1659	1	CORE-SHIELDING BEAD	06352	MMZ1608S301A
E19	9170-1659	1	CORE-SHIELDING BEAD	06352	MMZ1608S301A
E20	9170-1659	1	CORE-SHIELDING BEAD	06352	MMZ1608S301A
E21	9170-1659	1	CORE-SHIELDING BEAD	06352	MMZ1608S301A
E22	9170-1659	1	CORE-SHIELDING BEAD	06352	MMZ1608S301A
FL2	9135-0461	1	FILTER-SUPPRESSION EMI; SMT; WORKING	09939	NFM61R10T102M0 0-621
FL3	9135-0461	1	FILTER-SUPPRESSION EMI; SMT; WORKING	09939	NFM61R10T102M0 0-621
FL11	9135-0461	1	FILTER-SUPPRESSION EMI; SMT; WORKING	09939	NFM61R10T102M0 0-621
FL12	9135-0461	1	FILTER-SUPPRESSION EMI; SMT; WORKING	09939	NFM61R10T102M0 0-621
FL15	9135-0461	1	FILTER-SUPPRESSION EMI; SMT; WORKING	09939	NFM61R10T102M0 0-621
FL16	9135-0461	1	FILTER-SUPPRESSION EMI; SMT; WORKING	09939	NFM61R10T102M0 0-621
FL18	9135-0461	1	FILTER-SUPPRESSION EMI; SMT; WORKING	09939	NFM61R10T102M0 0-621
FL20	9135-0461	1	FILTER-SUPPRESSION EMI; SMT; WORKING	09939	NFM61R10T102M0 0-621
FL21	9135-0461	1	FILTER-SUPPRESSION EMI; SMT; WORKING	09939	NFM61R10T102M0 0-621

Agilent Part Number E4401-60224
Digital Demod RF

Reference Designator	Agilent Part Number	Qty	Description	Mgr Code	Mfr Part Number
FL22	9135-0461	1	FILTER-SUPPRESSION EMI; SMT; WORKING	09939	NFM61R10T102M0 0-621
FL23	9135-0461	1	FILTER-SUPPRESSION EMI; SMT; WORKING	09939	NFM61R10T102M0 0-621
FL24	9135-0461	1	FILTER-SUPPRESSION EMI; SMT; WORKING	09939	NFM61R10T102M0 0-621
FL25	9135-0461	1	FILTER-SUPPRESSION EMI; SMT; WORKING	09939	NFM61R10T102M0 0-621
FL26	9135-0461	1	FILTER-SUPPRESSION EMI; SMT; WORKING	09939	NFM61R10T102M0 0-621
FL27	9135-0461	1	FILTER-SUPPRESSION EMI; SMT; WORKING	09939	NFM61R10T102M0 0-621
FL28	9135-0461	1	FILTER-SUPPRESSION EMI; SMT; WORKING	09939	NFM61R10T102M0 0-621
FL29	9135-0461	1	FILTER-SUPPRESSION EMI; SMT; WORKING	09939	NFM61R10T102M0 0-621
FL30	9135-0461	1	FILTER-SUPPRESSION EMI; SMT; WORKING	09939	NFM61R10T102M0 0-621
FL31	9135-0461	1	FILTER-SUPPRESSION EMI; SMT; WORKING	09939	NFM61R10T102M0 0-621
J1	1252-5906	1	CONN-RECT MICRORBN 100-CKT 100-CONT	01380	2-557101-5
J2	1251-4928	1	CONN-POST TYPE .100-PIN-SPCG-MTG-END	01380	103240-5
J3	1250-1842	1	CONNECTOR-RF BNC FEMALE PC-W-STDFS	05879	31-5506
J4	1250-1842	1	CONNECTOR-RF BNC FEMALE PC-W-STDFS	05879	31-5506
J5	1250-2807	1	CONNECTOR-RF PUSH-ON MALE 50-OHM	06860	82MMCX-S50-0-2
J6	1250-2807	1	CONNECTOR-RF PUSH-ON MALE 50-OHM	06860	82MMCX-S50-0-2
J7	1250-2807	1	CONNECTOR-RF PUSH-ON MALE 50-OHM	06860	82MMCX-S50-0-2
J8	1250-2807	1	CONNECTOR-RF PUSH-ON MALE 50-OHM	06860	82MMCX-S50-0-2
J9	1250-2807	1	CONNECTOR-RF PUSH-ON MALE 50-OHM	06860	82MMCX-S50-0-2
J10	1250-2807	1	CONNECTOR-RF PUSH-ON MALE 50-OHM	06860	82MMCX-S50-0-2
J11	1250-2807	1	CONNECTOR-RF PUSH-ON MALE 50-OHM	06860	82MMCX-S50-0-2
J12	1250-2459	1	CONNECTOR-RF MMCX FEMALE PC-W/O-STDF	06860	82 MMCX-50-0-1/ 111OE
L1	9140-1736	1	INDUCTOR 47uH +20% -20% 7.3W-mmX7.3LG-mm	06353	E636CY-470M-P3

 **Indicates factory-selected value*

Agilent Part Number E4401-60224
Digital Demod RF

Reference Designator	Agilent Part Number	Qty	Description	Mgr Code	Mfr Part Number
L3	9140-1736	1	INDUCTOR 47uH +20% -20% 7.3W-mmX7.3LG-mm	06353	E636CY-470M-P3
L4	9140-1736	1	INDUCTOR 47uH +20% -20% 7.3W-mmX7.3LG-mm	06353	E636CY-470M-P3
L6	9140-1736	1	INDUCTOR 47uH +20% -20% 7.3W-mmX7.3LG-mm	06353	E636CY-470M-P3
L7	9140-1736	1	INDUCTOR 47uH +20% -20% 7.3W-mmX7.3LG-mm	06353	E636CY-470M-P3
L8	9140-1736	1	INDUCTOR 47uH +20% -20% 7.3W-mmX7.3LG-mm	06353	E636CY-470M-P3
L10	9140-1736	1	INDUCTOR 47uH +20% -20% 7.3W-mmX7.3LG-mm	06353	E636CY-470M-P3
L11	9140-1527	1	INDUCTOR 1.8uH +-5% 2.8W-mmX3.4LG-mm	06352	NL322522T-1R8J
L13	9140-1238	1	INDUCTOR 10uH +-5% 2.8W-mmX3.4LG-mm Q30	06352	NL322522T-100J
L14	9140-1238	1	INDUCTOR 10uH +-5% 2.8W-mmX3.4LG-mm Q30	06352	NL322522T-100J
L15	9140-1238	1	INDUCTOR 10uH +-5% 2.8W-mmX3.4LG-mm Q30	06352	NL322522T-100J
L16	9140-1238	1	INDUCTOR 10uH +-5% 2.8W-mmX3.4LG-mm Q30	06352	NL322522T-100J
L19	9140-1530	1	INDUCTOR 5.6uH +-5% 2.8W-mmX3.4LG-mm	06352	NL322522-5R6J-3
L22	9140-1237	1	INDUCTOR 4.7uH +-5% 2.8W-mmX3.4LG-mm	06352	NL322522T-4R7J
L23	9140-1237	1	INDUCTOR 4.7uH +-5% 2.8W-mmX3.4LG-mm	06352	NL322522T-4R7J
L24	9140-1237	1	INDUCTOR 4.7uH +-5% 2.8W-mmX3.4LG-mm	06352	NL322522T-4R7J
L25	9140-1104	1	INDUCTOR 820nH +-5% 2.8W-mmX3.4LG-mm	09891	KL32TER82J
L26	9140-1104	1	INDUCTOR 820nH +-5% 2.8W-mmX3.4LG-mm	09891	KL32TER82J
L27	9140-1104	1	INDUCTOR 820nH +-5% 2.8W-mmX3.4LG-mm	09891	KL32TER82J
L28	9140-1104	1	INDUCTOR 820nH +-5% 2.8W-mmX3.4LG-mm	09891	KL32TER82J
L29	9140-1424	1	INDUCTOR 180nH +-5% 2.8W-mmX3.4LG-mm	06352	NL322522T-R18J
L30	9140-1424	1	INDUCTOR 180nH +-5% 2.8W-mmX3.4LG-mm	06352	NL322522T-R18J
L32	9140-1736	1	INDUCTOR 47uH +20% -20% 7.3W-mmX7.3LG-mm	06353	E636CY-470M-P3
L33	9140-1736	1	INDUCTOR 47uH +20% -20% 7.3W-mmX7.3LG-mm	06353	E636CY-470M-P3

Agilent Part Number E4401-60224
Digital Demod RF

Reference Designator	Agilent Part Number	Qty	Description	Mgr Code	Mfr Part Number
L34	9140-1736	1	INDUCTOR 47uH +20% -20% 7.3W-mmX7.3LG-mm	06353	E636CY-470M-P3
L35	9140-1596	1	INDUCTOR 22uH +-5% 2.8W-mmX3.4LG-mm Q30	06352	NL322522T-220J
L36	9140-1531	1	INDUCTOR 18uH +-5% 2.8W-mmX3.4LG-mm Q30	09891	KL32TE180J
L37	9140-1531	1	INDUCTOR 18uH +-5% 2.8W-mmX3.4LG-mm Q30	09891	KL32TE180J
L38	9140-1527	1	INDUCTOR 1.8uH +-5% 2.8W-mmX3.4LG-mm	06352	NL322522T-1R8J
L39	9140-1510	1	INDUCTOR 1.5uH +-5% 2.8W-mmX3.4LG-mm	06352	NL322522T-1R5J
L40	9140-1510	1	INDUCTOR 1.5uH +-5% 2.8W-mmX3.4LG-mm	06352	NL322522T-1R5J
L41	9140-1436	1	INDUCTOR 390nH +-5% 2.8W-mmX3.4LG-mm	06352	NL322522T-R39J
L45	9140-1101	1	INDUCTOR 470nH +-5% 2.8W-mmX3.4LG-mm	09891	KL32TER47J
L46	9140-1236	1	INDUCTOR 1uH +-5% 2.8W-mmX3.4LG-mm Q30	06352	NL322522T-1R0J
L49	9140-1238	1	INDUCTOR 10uH +-5% 2.8W-mmX3.4LG-mm Q30	06352	NL322522T-100J
L50	9140-1238	1	INDUCTOR 10uH +-5% 2.8W-mmX3.4LG-mm Q30	06352	NL322522T-100J
L51	9140-1238	1	INDUCTOR 10uH +-5% 2.8W-mmX3.4LG-mm Q30	06352	NL322522T-100J
L52	9140-1238	1	INDUCTOR 10uH +-5% 2.8W-mmX3.4LG-mm Q30	06352	NL322522T-100J
L53	9140-1238	1	INDUCTOR 10uH +-5% 2.8W-mmX3.4LG-mm Q30	06352	NL322522T-100J
L54	9140-1238	1	INDUCTOR 10uH +-5% 2.8W-mmX3.4LG-mm Q30	06352	NL322522T-100J
L55	9140-1238	1	INDUCTOR 10uH +-5% 2.8W-mmX3.4LG-mm Q30	06352	NL322522T-100J
L56	9140-1238	1	INDUCTOR 10uH +-5% 2.8W-mmX3.4LG-mm Q30	06352	NL322522T-100J
L59	9140-1238	1	INDUCTOR 10uH +-5% 2.8W-mmX3.4LG-mm Q30	06352	NL322522T-100J
L60	9140-1238	1	INDUCTOR 10uH +-5% 2.8W-mmX3.4LG-mm Q30	06352	NL322522T-100J
L62	9140-1237	1	INDUCTOR 4.7uH +-5% 2.8W-mmX3.4LG-mm	06352	NL322522T-4R7J

 **Indicates factory-selected value*

Agilent Part Number E4401-60224
Digital Demod RF

Reference Designator	Agilent Part Number	Qty	Description	Mgr Code	Mfr Part Number
L63	9140-1237	1	INDUCTOR 4.7uH +-5% 2.8W-mmX3.4LG-mm	06352	NL322522T-4R7J
L66	9140-1237	1	INDUCTOR 4.7uH +-5% 2.8W-mmX3.4LG-mm	06352	NL322522T-4R7J
L67	9140-1237	1	INDUCTOR 4.7uH +-5% 2.8W-mmX3.4LG-mm	06352	NL322522T-4R7J
L70	9140-1510	1	INDUCTOR 1.5uH +-5% 2.8W-mmX3.4LG-mm	06352	NL322522T-1R5J
L71	9140-1510	1	INDUCTOR 1.5uH +-5% 2.8W-mmX3.4LG-mm	06352	NL322522T-1R5J
L78	9140-2505	1	AIR COIL-SURFACE MOUNT 0.222uH +-2.0 %	01886	132-14SMG
L79	9140-1104	1	INDUCTOR 820nH +-5% 2.8W-mmX3.4LG-mm	09891	KL32TER82J
L80	9140-1104	1	INDUCTOR 820nH +-5% 2.8W-mmX3.4LG-mm	09891	KL32TER82J
L81	9140-1736	1	INDUCTOR 47uH +20% -20% 7.3W-mmX7.3LG-mm	06353	E636CY-470M-P3
L82	9140-1236	1	INDUCTOR 1uH +-5% 2.8W-mmX3.4LG-mm Q30	06352	NL322522T-1R0J
L83	9140-1103	1	INDUCTOR 680nH +-5% 2.8W-mmX3.4LG-mm	06352	NL322522T-R68J
L84	9140-1387	1	INDUCTOR 6.8uH +-5% 2.8W-mmX3.4LG-mm	09891	KL32TE6R8J
L86	9140-1237	1	INDUCTOR 4.7uH +-5% 2.8W-mmX3.4LG-mm	06352	NL322522T-4R7J
L87	9140-1237	1	INDUCTOR 4.7uH +-5% 2.8W-mmX3.4LG-mm	06352	NL322522T-4R7J
L88	9140-1237	1	INDUCTOR 4.7uH +-5% 2.8W-mmX3.4LG-mm	06352	NL322522T-4R7J
L89	9140-1237	1	INDUCTOR 4.7uH +-5% 2.8W-mmX3.4LG-mm	06352	NL322522T-4R7J
L90	9140-1237	1	INDUCTOR 4.7uH +-5% 2.8W-mmX3.4LG-mm	06352	NL322522T-4R7J
L91	9140-1237	1	INDUCTOR 4.7uH +-5% 2.8W-mmX3.4LG-mm	06352	NL322522T-4R7J
L92	9140-1099	1	INDUCTOR 220nH +-5% 2.8W-mmX3.4LG-mm	09891	KL32TER22J
L93	9140-1238	1	INDUCTOR 10uH +-5% 2.8W-mmX3.4LG-mm Q30	06352	NL322522T-100J
L94	9140-1238	1	INDUCTOR 10uH +-5% 2.8W-mmX3.4LG-mm Q30	06352	NL322522T-100J
L95	9140-1736	1	INDUCTOR 47uH +20% -20% 7.3W-mmX7.3LG-mm	06353	E636CY-470M-P3
L96	9140-1736	1	INDUCTOR 47uH +20% -20% 7.3W-mmX7.3LG-mm	06353	E636CY-470M-P3
L97	9140-1201	1	INDUCTOR 39nH +-5% 2.8W-mmX3.4LG-mm Q25	06352	NL322522T-039J
L98	9140-1237	1	INDUCTOR 4.7uH +-5% 2.8W-mmX3.4LG-mm	06352	NL322522T-4R7J
L99	9140-1237	1	INDUCTOR 4.7uH +-5% 2.8W-mmX3.4LG-mm	06352	NL322522T-4R7J

Agilent Part Number E4401-60224
Digital Demod RF

Reference Designator	Agilent Part Number	Qty	Description	Mgr Code	Mfr Part Number
L100	9140-1237	1	INDUCTOR 4.7uH +-5% 2.8W-mmX3.4LG-mm	06352	NL322522T-4R7J
L101	9140-1237	1	INDUCTOR 4.7uH +-5% 2.8W-mmX3.4LG-mm	06352	NL322522T-4R7J
L102	9140-1127	1	INDUCTOR 680uH +-5% 3.4W-mmX4.8LG-mm	06352	NL453232T-681J
L103	9140-1127	1	INDUCTOR 680uH +-5% 3.4W-mmX4.8LG-mm	06352	NL453232T-681J
L104	9140-1237	1	INDUCTOR 4.7uH +-5% 2.8W-mmX3.4LG-mm	06352	NL322522T-4R7J
L105	9140-1237	1	INDUCTOR 4.7uH +-5% 2.8W-mmX3.4LG-mm	06352	NL322522T-4R7J
L109	9140-1237	1	INDUCTOR 4.7uH +-5% 2.8W-mmX3.4LG-mm	06352	NL322522T-4R7J
L110	9140-1237	1	INDUCTOR 4.7uH +-5% 2.8W-mmX3.4LG-mm	06352	NL322522T-4R7J
L111	9140-1237	1	INDUCTOR 4.7uH +-5% 2.8W-mmX3.4LG-mm	06352	NL322522T-4R7J
L112	9140-1237	1	INDUCTOR 4.7uH +-5% 2.8W-mmX3.4LG-mm	06352	NL322522T-4R7J
L113	9140-1205	1	INDUCTOR 82nH +-5% 2.8W-mmX3.4LG-mm Q27	09891	KL32TE082J
L114	9140-1205	1	INDUCTOR 82nH +-5% 2.8W-mmX3.4LG-mm Q27	09891	KL32TE082J
L115	9140-1205	1	INDUCTOR 82nH +-5% 2.8W-mmX3.4LG-mm Q27	09891	KL32TE082J
L116	9140-1104	1	INDUCTOR 820nH +-5% 2.8W-mmX3.4LG-mm	09891	KL32TER82J
L117	9140-1237	1	INDUCTOR 4.7uH +-5% 2.8W-mmX3.4LG-mm	06352	NL322522T-4R7J
L118	9140-1237	1	INDUCTOR 4.7uH +-5% 2.8W-mmX3.4LG-mm	06352	NL322522T-4R7J
L119	9140-1601	1	INDUCTOR 8.2uH +-5% 2.8W-mmX3.4LG-mm	06352	NL322522T-8R2J
L120	9140-1237	1	INDUCTOR 4.7uH +-5% 2.8W-mmX3.4LG-mm	06352	NL322522T-4R7J
L121	9140-1237	1	INDUCTOR 4.7uH +-5% 2.8W-mmX3.4LG-mm	06352	NL322522T-4R7J
MAJ3	0590-1310	1	NUT-SPCLY 1/2-28-THD .11-IN-THK .665-WD	03699	0590-1310
MAJ4	0515-2005	1	SCREW-MACHINE ASSEMBLY M2.5 X 0.45	05610	0515-2005
MBJ4	0590-1310	1	NUT-SPCLY 1/2-28-THD .11-IN-THK .665-WD	03699	0590-1310
MCJ4	E4401-00061	1	DRESS-PNL-RF IMP	28480	E4401-00061
MP3	E4401-60209	1		28480	E4401-60209
MP4	E4401-60225	1		28480	E4401-60225

 **Indicates factory-selected value*

Agilent Part Number E4401-60224
Digital Demod RF

Reference Designator	Agilent Part Number	Qty	Description	Mgr Code	Mfr Part Number
MP5	0515-0665	1	SCREW-MACHINE ASSEMBLY M3 X 0.5 14MM-LG	05610	0515-0665
MP6	0515-0665	1	SCREW-MACHINE ASSEMBLY M3 X 0.5 14MM-LG	05610	0515-0665
MP7	0515-0665	1	SCREW-MACHINE ASSEMBLY M3 X 0.5 14MM-LG	05610	0515-0665
MP8	0515-0665	1	SCREW-MACHINE ASSEMBLY M3 X 0.5 14MM-LG	05610	0515-0665
MP9	0515-0665	1	SCREW-MACHINE ASSEMBLY M3 X 0.5 14MM-LG	05610	0515-0665
MP10	0515-0665	1	SCREW-MACHINE ASSEMBLY M3 X 0.5 14MM-LG	05610	0515-0665
MP11	0515-0665	1	SCREW-MACHINE ASSEMBLY M3 X 0.5 14MM-LG	05610	0515-0665
MP12	0515-0665	1	SCREW-MACHINE ASSEMBLY M3 X 0.5 14MM-LG	05610	0515-0665
MP13	0515-0665	1	SCREW-MACHINE ASSEMBLY M3 X 0.5 14MM-LG	05610	0515-0665
MP14	0515-0665	1	SCREW-MACHINE ASSEMBLY M3 X 0.5 14MM-LG	05610	0515-0665
MP15	1400-0510	1	CLAMP-CABLE .15-DIA .62-WD NYL	02201	1400-0510
Q4	1854-1188	1	TRANSISTOR NPN SI SOT-23 (TO-236AB)	12125	KST4401
Q5	1854-1037	1	TRANSISTOR NPN SI TO-236AA PD350MW	00746	SST3904T116
Q6	1854-1037	1	TRANSISTOR NPN SI TO-236AA PD350MW	00746	SST3904T116
Q7	1854-1055	1	TRANSISTOR NPN SI SOT-23 (TO-236AB)	02910	BFR93
Q8	1854-1037	1	TRANSISTOR NPN SI TO-236AA PD350MW	00746	SST3904T116
Q9	1854-1037	1	TRANSISTOR NPN SI TO-236AA PD350MW	00746	SST3904T116
Q10	1854-1037	1	TRANSISTOR NPN SI TO-236AA PD350MW	00746	SST3904T116
Q11	1854-1037	1	TRANSISTOR NPN SI TO-236AA PD350MW	00746	SST3904T116
Q12	1854-1037	1	TRANSISTOR NPN SI TO-236AA PD350MW	00746	SST3904T116
Q13	1854-1037	1	TRANSISTOR NPN SI TO-236AA PD350MW	00746	SST3904T116
Q14	1854-1037	1	TRANSISTOR NPN SI TO-236AA PD350MW	00746	SST3904T116
Q15	1853-0724	1	TRANSISTOR PNP SI TO-261AA (SOT-223)	02910	PZT2907A
Q17	1854-1298	1	TRANSISTOR NPN SI PD500MW	01542	AT-41486

Agilent Part Number E4401-60224
Digital Demod RF

Reference Designator	Agilent Part Number	Qty	Description	Mgr Code	Mfr Part Number
Q19	1854-1037	1	TRANSISTOR NPN SI TO-236AA PD350MW	00746	SST3904T116
Q20	1854-1037	1	TRANSISTOR NPN SI TO-236AA PD350MW	00746	SST3904T116
Q21	1854-1037	1	TRANSISTOR NPN SI TO-236AA PD350MW	00746	SST3904T116
Q22	1854-1037	1	TRANSISTOR NPN SI TO-236AA PD350MW	00746	SST3904T116
Q24	1854-1037	1	TRANSISTOR NPN SI TO-236AA PD350MW	00746	SST3904T116
Q25	1854-1037	1	TRANSISTOR NPN SI TO-236AA PD350MW	00746	SST3904T116
Q26	1854-1037	1	TRANSISTOR NPN SI TO-236AA PD350MW	00746	SST3904T116
Q27	1853-0567	1	TRANSISTOR PNP SI SOT-23 (TO-236AB)	12125	KST3906
Q28	1853-0567	1	TRANSISTOR PNP SI SOT-23 (TO-236AB)	12125	KST3906
Q29	1853-0567	1	TRANSISTOR PNP SI SOT-23 (TO-236AB)	12125	KST3906
Q30	1854-1037	1	TRANSISTOR NPN SI TO-236AA PD350MW	00746	SST3904T116
Q31	1854-1037	1	TRANSISTOR NPN SI TO-236AA PD350MW	00746	SST3904T116
Q32	1854-1037	1	TRANSISTOR NPN SI TO-236AA PD350MW	00746	SST3904T116
Q33	1854-1037	1	TRANSISTOR NPN SI TO-236AA PD350MW	00746	SST3904T116
Q34	1854-1037	1	TRANSISTOR NPN SI TO-236AA PD350MW	00746	SST3904T116
Q35	1855-0715	1	TRANSISTOR J-FET N-CHAN D-MODE SOT-23	02910	PMBF4393
R206	0699-3938	1	RESISTOR 383 +-1% .063W TKF TC0+-200	00746	MCR03-F-3830
R207	0699-3970	1	RESISTOR 10K +-1% .063W TKF TC0+-200	09891	RK73H1J1002F
R464	0699-3970	1	RESISTOR 10K +-1% .063W TKF TC0+-200	09891	RK73H1J1002F
R466	0699-3978	1	RESISTOR 21.5K +-1% .063W TKF TC0+-200	09891	RK73H1J2152F
R467	0699-3990	1	RESISTOR 75K +-1% .063W TKF TC0+-200	09891	RK73H1J7502F
R468	0699-3985	1	RESISTOR 42.2K +-1% .063W TKF TC0+-200	09891	RK73H1J4222F
R469	0699-3970	1	RESISTOR 10K +-1% .063W TKF TC0+-200	09891	RK73H1J1002F
R470	0699-3982	1	RESISTOR 31.6K +-1% .063W TKF TC0+-200	09891	RK73H1J3162F
R471	0699-3973	1	RESISTOR 13.3K +-1% .063W TKF TC0+-200	09891	RK73H1J1332F
R472	0699-3970	1	RESISTOR 10K +-1% .063W TKF TC0+-200	09891	RK73H1J1002F
R473	0699-3970	1	RESISTOR 10K +-1% .063W TKF TC0+-200	09891	RK73H1J1002F
R476	0699-3970	1	RESISTOR 10K +-1% .063W TKF TC0+-200	09891	RK73H1J1002F
R477	0699-3970	1	RESISTOR 10K +-1% .063W TKF TC0+-200	09891	RK73H1J1002F
R478	0699-3970	1	RESISTOR 10K +-1% .063W TKF TC0+-200	09891	RK73H1J1002F

 **Indicates factory-selected value*

Agilent Part Number E4401-60224
Digital Demod RF

Reference Designator	Agilent Part Number	Qty	Description	Mgr Code	Mfr Part Number
R479	0699-3970	1	RESISTOR 10K +-1% .063W TKF TC0+-200	09891	RK73H1J1002F
R480	0699-3970	1	RESISTOR 10K +-1% .063W TKF TC0+-200	09891	RK73H1J1002F
R481	0699-3970	1	RESISTOR 10K +-1% .063W TKF TC0+-200	09891	RK73H1J1002F
R482	0699-3970	1	RESISTOR 10K +-1% .063W TKF TC0+-200	09891	RK73H1J1002F
R484	0699-3964	1	RESISTOR 5.11K +-1% .063W TKF TC0+-200	09891	RK73H1J5111F
R485	0699-3964	1	RESISTOR 5.11K +-1% .063W TKF TC0+-200	09891	RK73H1J5111F
R486	0699-3964	1	RESISTOR 5.11K +-1% .063W TKF TC0+-200	09891	RK73H1J5111F
R487	0699-3963	1	RESISTOR 4.64K +-1% .063W TKF TC0+-200	09891	RK73H1J4641F
R488	0699-3961	1	RESISTOR 3.83K +-1% .063W TKF TC0+-200	09891	RK73H1J3831F
R489	0699-3960	1	RESISTOR 3.48K +-1% .063W TKF TC0+-200	09891	RK73H1J3481F
R490	0699-3960	1	RESISTOR 3.48K +-1% .063W TKF TC0+-200	09891	RK73H1J3481F
R491	0699-3955	1	RESISTOR 2.15K +-1% .063W TKF TC0+-200	09891	RK73H1J2151F
R492	0699-3955	1	RESISTOR 2.15K +-1% .063W TKF TC0+-200	09891	RK73H1J2151F
R493	0699-3955	1	RESISTOR 2.15K +-1% .063W TKF TC0+-200	09891	RK73H1J2151F
R494	0699-3959	1	RESISTOR 3.16K +-1% .063W TKF TC0+-200	00746	MCR03-F-3161
R495	0699-3953	1	RESISTOR 1.78K +-1% .063W TKF TC0+-200	00746	MCR03-F-1781
R496	0699-3955	1	RESISTOR 2.15K +-1% .063W TKF TC0+-200	09891	RK73H1J2151F
R497	0699-3955	1	RESISTOR 2.15K +-1% .063W TKF TC0+-200	09891	RK73H1J2151F
R498	0699-3955	1	RESISTOR 2.15K +-1% .063W TKF TC0+-200	09891	RK73H1J2151F
R499	0699-3955	1	RESISTOR 2.15K +-1% .063W TKF TC0+-200	09891	RK73H1J2151F
R500	0699-3955	1	RESISTOR 2.15K +-1% .063W TKF TC0+-200	09891	RK73H1J2151F
R502	0699-3952	1	RESISTOR 1.62K +-1% .063W TKF TC0+-200	09891	RK73H1J1621F
R503	0699-3580	1	RESISTOR 249 +-0.1% .125W TF TC0+-25	02499	W1206R03-2490B
R504	0699-3951	1	RESISTOR 1.47K +-1% .063W TKF TC0+-200	00746	MCR03-F-1471
R505	0699-3972	1	RESISTOR 12.1K +-1% .063W TKF TC0+-200	09891	RK73H1J1212F
R506	0699-3947	1	RESISTOR 1K +-1% .063W TKF TC0+-200	00746	MCR03-F-1001
R507	0699-3947	1	RESISTOR 1K +-1% .063W TKF TC0+-200	00746	MCR03-F-1001
R508	0699-3947	1	RESISTOR 1K +-1% .063W TKF TC0+-200	00746	MCR03-F-1001
R510	0699-3947	1	RESISTOR 1K +-1% .063W TKF TC0+-200	00746	MCR03-F-1001
R511	0699-3945	1	RESISTOR 825 +-1% .063W TKF TC0+-200	00746	MCR03-F-8250

Agilent Part Number E4401-60224
Digital Demod RF

Reference Designator	Agilent Part Number	Qty	Description	Mgr Code	Mfr Part Number
R512	0699-3933	1	RESISTOR 237 +-1% .063W TKF TC0+-200	00746	MCR03-F-2370
R513	0699-3941	1	RESISTOR 511 +-1% .063W TKF TC0+-200	00746	MCR03-F-5110
R514	0699-3941	1	RESISTOR 511 +-1% .063W TKF TC0+-200	00746	MCR03-F-5110
R515	0699-3940	1	RESISTOR 464 +-1% .063W TKF TC0+-200	09891	RK73H1J4640F
R516	0699-3940	1	RESISTOR 464 +-1% .063W TKF TC0+-200	09891	RK73H1J4640F
R517	0699-3939	1	RESISTOR 422 +-1% .063W TKF TC0+-200	09891	RK73H1J4220F
R518	0699-3938	1	RESISTOR 383 +-1% .063W TKF TC0+-200	00746	MCR03-F-3830
R519	0699-3938	1	RESISTOR 383 +-1% .063W TKF TC0+-200	00746	MCR03-F-3830
R520	0699-3938	1	RESISTOR 383 +-1% .063W TKF TC0+-200	00746	MCR03-F-3830
R521	0699-3933	1	RESISTOR 237 +-1% .063W TKF TC0+-200	00746	MCR03-F-2370
R522	0699-3933	1	RESISTOR 237 +-1% .063W TKF TC0+-200	00746	MCR03-F-2370
R523	0699-3933	1	RESISTOR 237 +-1% .063W TKF TC0+-200	00746	MCR03-F-2370
R524	0699-3933	1	RESISTOR 237 +-1% .063W TKF TC0+-200	00746	MCR03-F-2370
R526	0699-3932	1	RESISTOR 215 +-1% .063W TKF TC0+-200	00746	MCR03-F-2150
R527	0699-3922	1	RESISTOR 82.5 +-1% .063W TKF TC0+-200	09891	RK73H1J82R5F
R529	0699-3921	1	RESISTOR 75 +-1% .063W TKF TC0+-200	00746	MCR03-F-75R0
R530	0699-3924	1	RESISTOR 100 +-1% .063W TKF TC0+-200	00746	MCR03-F-1000
R531	0699-3924	1	RESISTOR 100 +-1% .063W TKF TC0+-200	00746	MCR03-F-1000
R532	0699-3920	1	RESISTOR 68.1 +-1% .063W TKF TC0+-200	09891	RK73H1J68R1F
R533	0699-3918	1	RESISTOR 51.1 +-1% .063W TKF TC0+-200	00746	MCR03-F-51R1
R534	0699-3918	1	RESISTOR 51.1 +-1% .063W TKF TC0+-200	00746	MCR03-F-51R1
R535	0699-3918	1	RESISTOR 51.1 +-1% .063W TKF TC0+-200	00746	MCR03-F-51R1
R536	0699-3918	1	RESISTOR 51.1 +-1% .063W TKF TC0+-200	00746	MCR03-F-51R1
R537	0699-3918	1	RESISTOR 51.1 +-1% .063W TKF TC0+-200	00746	MCR03-F-51R1
R538	0699-3918	1	RESISTOR 51.1 +-1% .063W TKF TC0+-200	00746	MCR03-F-51R1
R539	0699-3918	1	RESISTOR 51.1 +-1% .063W TKF TC0+-200	00746	MCR03-F-51R1
R540	0699-3918	1	RESISTOR 51.1 +-1% .063W TKF TC0+-200	00746	MCR03-F-51R1
R542	0699-3918	1	RESISTOR 51.1 +-1% .063W TKF TC0+-200	00746	MCR03-F-51R1
R543	0699-3910	1	RESISTOR 23.7 +-1% .063W TKF TC0+-200	09891	RK73H1J23R7F
R545	0699-3901	1	RESISTOR 10 +-1% .063W TKF TC0+-200	00746	MCR03-F-10R0

 **Indicates factory-selected value*

Agilent Part Number E4401-60224
Digital Demod RF

Reference Designator	Agilent Part Number	Qty	Description	Mgr Code	Mfr Part Number
R546	0699-3901	1	RESISTOR 10 +-1% .063W TKF TC0+-200	00746	MCR03-F-10R0
R549	0699-3362	1	RESISTOR 3.3 +-5% .063W TKF TC0+-500	09891	RM73B1J3R3J
R551	0699-3362	1	RESISTOR 3.3 +-5% .063W TKF TC0+-500	09891	RM73B1J3R3J
R552	0699-3362	1	RESISTOR 3.3 +-5% .063W TKF TC0+-500	09891	RM73B1J3R3J
R553	0699-3362	1	RESISTOR 3.3 +-5% .063W TKF TC0+-500	09891	RM73B1J3R3J
R554	0699-2846	1	RESISTOR 5K +-0.1% .125W TF TC0+-25	02499	W1206R035001BT
R555	0699-2846	1	RESISTOR 5K +-0.1% .125W TF TC0+-25	02499	W1206R035001BT
R556	0699-2835	1	RESISTOR 500 +-0.1% .125W TF TC0+-25	02499	W1206R035000BT
R557	0699-2835	1	RESISTOR 500 +-0.1% .125W TF TC0+-25	02499	W1206R035000BT
R558	0699-2835	1	RESISTOR 500 +-0.1% .125W TF TC0+-25	02499	W1206R035000BT
R559	0699-2835	1	RESISTOR 500 +-0.1% .125W TF TC0+-25	02499	W1206R035000BT
R560	0699-2490	1	RESISTOR 1K +-0.1% .125W TF TC0+-25	01172	BLU-1206 1K .1% 25PPM
R561	0699-2490	1	RESISTOR 1K +-0.1% .125W TF TC0+-25	01172	BLU-1206 1K .1% 25PPM
R562	0699-2489	1	RESISTOR 10K +-0.1% .125W TF TC0+-25	01172	BLU-1206 10K .1% 25PPM
R563	0699-2489	1	RESISTOR 10K +-0.1% .125W TF TC0+-25	01172	BLU-1206 10K .1% 25PPM
R567	0699-1436	1	RESISTOR 750 +-1% .125W TKF TC0+-100	09891	RK73H2BT7500F
R568	0699-3938	1	RESISTOR 383 +-1% .063W TKF TC0+-200	00746	MCR03-F-3830
R569	0699-3938	1	RESISTOR 383 +-1% .063W TKF TC0+-200	00746	MCR03-F-3830
R570	0699-1422	1	RESISTOR 196 +-1% .125W TKF TC0+-100	09891	RK73H2BT1960F
R571	0699-1422	1	RESISTOR 196 +-1% .125W TKF TC0+-100	09891	RK73H2BT1960F
R572	0699-3961	1	RESISTOR 3.83K +-1% .063W TKF TC0+-200	09891	RK73H1J3831F
R575	0699-3947	1	RESISTOR 1K +-1% .063W TKF TC0+-200	00746	MCR03-F-1001
R579	0699-3932	1	RESISTOR 215 +-1% .063W TKF TC0+-200	00746	MCR03-F-2150
R581	0699-2890	1	RESISTOR 3.3 +-5% .125W TKF TC0+-300	00746	MCR18-J-3R3
R582	0699-1437	1	RESISTOR 825 +-1% .125W TKF TC0+-100	00746	MCR18-F-8250
R583	0699-1437	1	RESISTOR 825 +-1% .125W TKF TC0+-100	00746	MCR18-F-8250
R584	0699-1437	1	RESISTOR 825 +-1% .125W TKF TC0+-100	00746	MCR18-F-8250

Agilent Part Number E4401-60224
Digital Demod RF

Reference Designator	Agilent Part Number	Qty	Description	Mgr Code	Mfr Part Number
R588	0699-1366	1	RESISTOR 82.5 +-1% .125W TKF TC0+-100	05524	CRCW120682R5F
R589	0699-1366	1	RESISTOR 82.5 +-1% .125W TKF TC0+-100	05524	CRCW120682R5F
R590	1810-1940	1	NET-RES 4 220.0 OHM 8-PIN	00746	MNR34J221
R591	1810-1940	1	NET-RES 4 220.0 OHM 8-PIN	00746	MNR34J221
R592	0699-3914	1	RESISTOR 34.8 +-1% .063W TKF TC0+-200	00746	MCR03-F-34R8
R593	0699-3970	1	RESISTOR 10K +-1% .063W TKF TC0+-200	09891	RK73H1J1002F
R601	0699-3970	1	RESISTOR 10K +-1% .063W TKF TC0+-200	09891	RK73H1J1002F
R606	0699-3993	1	RESISTOR 100K +-1% .063W TKF TC0+-200	09891	RK73H1J1003F
R607	0699-3574	1	RESISTOR 0 .0625W TKF	09891	RM73Z1JT
R608	0699-3574	1	RESISTOR 0 .0625W TKF	09891	RM73Z1JT
R609	0699-3949	1	RESISTOR 1.21K +-1% .063W TKF TC0+-200	00746	MCR03-F-1211
R610	0699-3970	1	RESISTOR 10K +-1% .063W TKF TC0+-200	09891	RK73H1J1002F
R611	0699-3369	1	RESISTOR 562K +-1% .065W TKF TC0+-200	09891	RK73H1J5623F
R612	0699-3985	1	RESISTOR 42.2K +-1% .063W TKF TC0+-200	09891	RK73H1J4222F
R613	0699-3985	1	RESISTOR 42.2K +-1% .063W TKF TC0+-200	09891	RK73H1J4222F
R616	0699-3970	1	RESISTOR 10K +-1% .063W TKF TC0+-200	09891	RK73H1J1002F
R617	0699-3977	1	RESISTOR 19.6K +-1% .063W TKF TC0+-200	09891	RK73H1J1962F
R618	0699-3977	1	RESISTOR 19.6K +-1% .063W TKF TC0+-200	09891	RK73H1J1962F
R622	0699-3971	1	RESISTOR 11K +-1% .063W TKF TC0+-200	00746	MCR03-F-1102
R629	0699-3970	1	RESISTOR 10K +-1% .063W TKF TC0+-200	09891	RK73H1J1002F
R630	0699-3970	1	RESISTOR 10K +-1% .063W TKF TC0+-200	09891	RK73H1J1002F
R631	0699-3970	1	RESISTOR 10K +-1% .063W TKF TC0+-200	09891	RK73H1J1002F
R632	0699-3970	1	RESISTOR 10K +-1% .063W TKF TC0+-200	09891	RK73H1J1002F
R633	0699-3947	1	RESISTOR 1K +-1% .063W TKF TC0+-200	00746	MCR03-F-1001
R634	0699-2841	1	RESISTOR 9K +-0.1% .125W TF TC0+-25	02499	W1206R039001BT
R639	0699-3966	1	RESISTOR 6.81K +-1% .063W TKF TC0+-200	09891	RK73H1J6811F
R640	0699-3919	1	RESISTOR 61.9 +-1% .063W TKF TC0+-200	05524	CRCW060361R9F
R648	0699-3964	1	RESISTOR 5.11K +-1% .063W TKF TC0+-200	09891	RK73H1J5111F
R649	0699-3964	1	RESISTOR 5.11K +-1% .063W TKF TC0+-200	09891	RK73H1J5111F
R650	0699-3964	1	RESISTOR 5.11K +-1% .063W TKF TC0+-200	09891	RK73H1J5111F

 **Indicates factory-selected value*

Agilent Part Number E4401-60224
Digital Demod RF

Reference Designator	Agilent Part Number	Qty	Description	Mgr Code	Mfr Part Number
R653	0699-3959	1	RESISTOR 3.16K +-1% .063W TKF TC0+-200	00746	MCR03-F-3161
R654	0699-3959	1	RESISTOR 3.16K +-1% .063W TKF TC0+-200	00746	MCR03-F-3161
R656	0699-3970	1	RESISTOR 10K +-1% .063W TKF TC0+-200	09891	RK73H1J1002F
R657	0699-3954	1	RESISTOR 1.96K +-1% .063W TKF TC0+-200	09891	RK73H1J1961F
R658	0699-3957	1	RESISTOR 2.61K +-1% .063W TKF TC0+-200	09891	RK73H1J2611F
R660	0699-3955	1	RESISTOR 2.15K +-1% .063W TKF TC0+-200	09891	RK73H1J2151F
R661	0699-3955	1	RESISTOR 2.15K +-1% .063W TKF TC0+-200	09891	RK73H1J2151F
R662	0699-3954	1	RESISTOR 1.96K +-1% .063W TKF TC0+-200	09891	RK73H1J1961F
R666	0699-3954	1	RESISTOR 1.96K +-1% .063W TKF TC0+-200	09891	RK73H1J1961F
R667	0699-2847	1	RESISTOR 2K +-0.1% .125W TF TC0+-25	01172	BLU-1206 2K .1% 25PPM
R668	0699-2831	1	RESISTOR 150 +-0.1% .125W TF TC0+-25	02499	W1206R031500BT
R670	0699-3965	1	RESISTOR 6.19K +-1% .063W TKF TC0+-200	09891	RK73H1J6191F
R671	0699-3970	1	RESISTOR 10K +-1% .063W TKF TC0+-200	09891	RK73H1J1002F
R672	0699-3950	1	RESISTOR 1.33K +-1% .063W TKF TC0+-200	09891	RK73H1J1331F
R673	0699-3950	1	RESISTOR 1.33K +-1% .063W TKF TC0+-200	09891	RK73H1J1331F
R674	0699-3950	1	RESISTOR 1.33K +-1% .063W TKF TC0+-200	09891	RK73H1J1331F
R676	0699-3947	1	RESISTOR 1K +-1% .063W TKF TC0+-200	00746	MCR03-F-1001
R677	0699-3947	1	RESISTOR 1K +-1% .063W TKF TC0+-200	00746	MCR03-F-1001
R678	0699-3947	1	RESISTOR 1K +-1% .063W TKF TC0+-200	00746	MCR03-F-1001
R679	0699-3972	1	RESISTOR 12.1K +-1% .063W TKF TC0+-200	09891	RK73H1J1212F
R683	0699-3972	1	RESISTOR 12.1K +-1% .063W TKF TC0+-200	09891	RK73H1J1212F
R684	0699-3937	1	RESISTOR 348 +-1% .063W TKF TC0+-200	00746	MCR03-F-3480
R686	0699-3947	1	RESISTOR 1K +-1% .063W TKF TC0+-200	00746	MCR03-F-1001
R688	0699-3929	1	RESISTOR 162 +-1% .063W TKF TC0+-200	09891	RK73H1J1620F
R690	0699-3947	1	RESISTOR 1K +-1% .063W TKF TC0+-200	00746	MCR03-F-1001
R692	0699-3947	1	RESISTOR 1K +-1% .063W TKF TC0+-200	00746	MCR03-F-1001
R693	0699-3949	1	RESISTOR 1.21K +-1% .063W TKF TC0+-200	00746	MCR03-F-1211
R697	0699-3924	1	RESISTOR 100 +-1% .063W TKF TC0+-200	00746	MCR03-F-1000
R700	0699-3933	1	RESISTOR 237 +-1% .063W TKF TC0+-200	00746	MCR03-F-2370

Agilent Part Number E4401-60224
Digital Demod RF

Reference Designator	Agilent Part Number	Qty	Description	Mgr Code	Mfr Part Number
R701	0699-3933	1	RESISTOR 237 +-1% .063W TKF TC0+-200	00746	MCR03-F-2370
R702	0699-3941	1	RESISTOR 511 +-1% .063W TKF TC0+-200	00746	MCR03-F-5110
R703	0699-3941	1	RESISTOR 511 +-1% .063W TKF TC0+-200	00746	MCR03-F-5110
R705	0699-3939	1	RESISTOR 422 +-1% .063W TKF TC0+-200	09891	RK73H1J4220F
R706	0699-3939	1	RESISTOR 422 +-1% .063W TKF TC0+-200	09891	RK73H1J4220F
R707	0699-3938	1	RESISTOR 383 +-1% .063W TKF TC0+-200	00746	MCR03-F-3830
R708	0699-3938	1	RESISTOR 383 +-1% .063W TKF TC0+-200	00746	MCR03-F-3830
R709	0699-3938	1	RESISTOR 383 +-1% .063W TKF TC0+-200	00746	MCR03-F-3830
R710	0699-3938	1	RESISTOR 383 +-1% .063W TKF TC0+-200	00746	MCR03-F-3830
R711	0699-3941	1	RESISTOR 511 +-1% .063W TKF TC0+-200	00746	MCR03-F-5110
R712	0699-3942	1	RESISTOR 619 +-1% .063W TKF TC0+-200	00746	MCR03-F-6190
R718	0699-3934	1	RESISTOR 261 +-1% .063W TKF TC0+-200	09891	RK73H1J2610F
R719	0699-3936	1	RESISTOR 316 +-1% .063W TKF TC0+-200	00746	MCR03-F-3160
R720	0699-3925	1	RESISTOR 110 +-1% .063W TKF TC0+-200	00746	MCR03-F-1100
R721	0699-3935	1	RESISTOR 287 +-1% .063W TKF TC0+-200	00746	MCR03-F-2870
R722	0699-3935	1	RESISTOR 287 +-1% .063W TKF TC0+-200	00746	MCR03-F-2870
R723	0699-3924	1	RESISTOR 100 +-1% .063W TKF TC0+-200	00746	MCR03-F-1000
R724	0699-3924	1	RESISTOR 100 +-1% .063W TKF TC0+-200	00746	MCR03-F-1000
R725	0699-3921	1	RESISTOR 75 +-1% .063W TKF TC0+-200	00746	MCR03-F-75R0
R726	0699-3918	1	RESISTOR 51.1 +-1% .063W TKF TC0+-200	00746	MCR03-F-51R1
R727	0699-3918	1	RESISTOR 51.1 +-1% .063W TKF TC0+-200	00746	MCR03-F-51R1
R728	0699-3918	1	RESISTOR 51.1 +-1% .063W TKF TC0+-200	00746	MCR03-F-51R1
R729	0699-3918	1	RESISTOR 51.1 +-1% .063W TKF TC0+-200	00746	MCR03-F-51R1
R730	0699-3918	1	RESISTOR 51.1 +-1% .063W TKF TC0+-200	00746	MCR03-F-51R1
R732	0699-3918	1	RESISTOR 51.1 +-1% .063W TKF TC0+-200	00746	MCR03-F-51R1
R734	0699-3910	1	RESISTOR 23.7 +-1% .063W TKF TC0+-200	09891	RK73H1J23R7F
R735	0699-3910	1	RESISTOR 23.7 +-1% .063W TKF TC0+-200	09891	RK73H1J23R7F
R736	0699-3910	1	RESISTOR 23.7 +-1% .063W TKF TC0+-200	09891	RK73H1J23R7F
R744	0699-3907	1	RESISTOR 17.8 +-1% .063W TKF TC0+-200	09891	RK73H1J17R8F
R747	0699-3574	1	RESISTOR 0 .0625W TKF	09891	RM73Z1JT

 **Indicates factory-selected value*

Agilent Part Number E4401-60224
Digital Demod RF

Reference Designator	Agilent Part Number	Qty	Description	Mgr Code	Mfr Part Number
R749	0699-3901	1	RESISTOR 10 +-1% .063W TKF TC0+-200	00746	MCR03-F-10R0
R750	0699-3901	1	RESISTOR 10 +-1% .063W TKF TC0+-200	00746	MCR03-F-10R0
R754	0699-3365	1	RESISTOR 56.2 +-1% .065W TKF TC0+-200	09891	RK73H1J56R2F
R757	0699-2840	1	RESISTOR 2.5K +-0.1% .125W TF TC0+-25	02499	W1206R032501BT
R758	0699-2840	1	RESISTOR 2.5K +-0.1% .125W TF TC0+-25	02499	W1206R032501BT
R759	0699-2840	1	RESISTOR 2.5K +-0.1% .125W TF TC0+-25	02499	W1206R032501BT
R760	0699-2840	1	RESISTOR 2.5K +-0.1% .125W TF TC0+-25	02499	W1206R032501BT
R761	0699-2835	1	RESISTOR 500 +-0.1% .125W TF TC0+-25	02499	W1206R035000BT
R762	0699-2835	1	RESISTOR 500 +-0.1% .125W TF TC0+-25	02499	W1206R035000BT
R763	0699-2835	1	RESISTOR 500 +-0.1% .125W TF TC0+-25	02499	W1206R035000BT
R764	0699-2835	1	RESISTOR 500 +-0.1% .125W TF TC0+-25	02499	W1206R035000BT
R765	0699-2835	1	RESISTOR 500 +-0.1% .125W TF TC0+-25	02499	W1206R035000BT
R766	0699-2835	1	RESISTOR 500 +-0.1% .125W TF TC0+-25	02499	W1206R035000BT
R767	0699-2835	1	RESISTOR 500 +-0.1% .125W TF TC0+-25	02499	W1206R035000BT
R768	0699-2835	1	RESISTOR 500 +-0.1% .125W TF TC0+-25	02499	W1206R035000BT
R769	0699-2490	1	RESISTOR 1K +-0.1% .125W TF TC0+-25	01172	BLU-1206 1K .1% 25PPM
R770	0699-4364	1	RESISTOR 4.7 +-5% .063W TKF TC0+-500	09891	RM73B1J4R7J
R771	0699-2490	1	RESISTOR 1K +-0.1% .125W TF TC0+-25	01172	BLU-1206 1K .1% 25PPM
R772	0699-4364	1	RESISTOR 4.7 +-5% .063W TKF TC0+-500	09891	RM73B1J4R7J
R786	0699-3924	1	RESISTOR 100 +-1% .063W TKF TC0+-200	00746	MCR03-F-1000
R787	0699-3978	1	RESISTOR 21.5K +-1% .063W TKF TC0+-200	09891	RK73H1J2152F
R788	0699-3978	1	RESISTOR 21.5K +-1% .063W TKF TC0+-200	09891	RK73H1J2152F
R790	0699-3970	1	RESISTOR 10K +-1% .063W TKF TC0+-200	09891	RK73H1J1002F
R792	0699-3970	1	RESISTOR 10K +-1% .063W TKF TC0+-200	09891	RK73H1J1002F
R793	0699-3970	1	RESISTOR 10K +-1% .063W TKF TC0+-200	09891	RK73H1J1002F
R794	0699-3963	1	RESISTOR 4.64K +-1% .063W TKF TC0+-200	09891	RK73H1J4641F
R795	0699-3963	1	RESISTOR 4.64K +-1% .063W TKF TC0+-200	09891	RK73H1J4641F
R796	0699-3963	1	RESISTOR 4.64K +-1% .063W TKF TC0+-200	09891	RK73H1J4641F

Agilent Part Number E4401-60224
Digital Demod RF

Reference Designator	Agilent Part Number	Qty	Description	Mgr Code	Mfr Part Number
R797	0699-3961	1	RESISTOR 3.83K +-1% .063W TKF TC0+-200	09891	RK73H1J3831F
R798	0699-3952	1	RESISTOR 1.62K +-1% .063W TKF TC0+-200	09891	RK73H1J1621F
R799	0699-3952	1	RESISTOR 1.62K +-1% .063W TKF TC0+-200	09891	RK73H1J1621F
R800	0699-3947	1	RESISTOR 1K +-1% .063W TKF TC0+-200	00746	MCR03-F-1001
R805	0699-3924	1	RESISTOR 100 +-1% .063W TKF TC0+-200	00746	MCR03-F-1000
R809	0699-3924	1	RESISTOR 100 +-1% .063W TKF TC0+-200	00746	MCR03-F-1000
R813	0699-1358	1	RESISTOR 38.3 +-1% .125W TKF TC0+-100	09891	RK73H2BT38R3F
R814	0699-1359	1	RESISTOR 42.2 +-1% .125W TKF TC0+-100	05524	CRCW120642R2F
R815	0699-1358	1	RESISTOR 38.3 +-1% .125W TKF TC0+-100	09891	RK73H2BT38R3F
R816	0699-1359	1	RESISTOR 42.2 +-1% .125W TKF TC0+-100	05524	CRCW120642R2F
R817	0699-3928	1	RESISTOR 147 +-1% .063W TKF TC0+-200	00746	MCR03-F-1470
R819	0699-3970	1	RESISTOR 10K +-1% .063W TKF TC0+-200	09891	RK73H1J1002F
R820	0699-3970	1	RESISTOR 10K +-1% .063W TKF TC0+-200	09891	RK73H1J1002F
R821	0699-3970	1	RESISTOR 10K +-1% .063W TKF TC0+-200	09891	RK73H1J1002F
R822	0699-3970	1	RESISTOR 10K +-1% .063W TKF TC0+-200	09891	RK73H1J1002F
R823	0699-3970	1	RESISTOR 10K +-1% .063W TKF TC0+-200	09891	RK73H1J1002F
R824	0699-3970	1	RESISTOR 10K +-1% .063W TKF TC0+-200	09891	RK73H1J1002F
R825	0699-3970	1	RESISTOR 10K +-1% .063W TKF TC0+-200	09891	RK73H1J1002F
R826	0699-3970	1	RESISTOR 10K +-1% .063W TKF TC0+-200	09891	RK73H1J1002F
R827	0699-3970	1	RESISTOR 10K +-1% .063W TKF TC0+-200	09891	RK73H1J1002F
R828	0699-3970	1	RESISTOR 10K +-1% .063W TKF TC0+-200	09891	RK73H1J1002F
R829	0699-3970	1	RESISTOR 10K +-1% .063W TKF TC0+-200	09891	RK73H1J1002F
R833	0699-3970	1	RESISTOR 10K +-1% .063W TKF TC0+-200	09891	RK73H1J1002F
R834	0699-3970	1	RESISTOR 10K +-1% .063W TKF TC0+-200	09891	RK73H1J1002F
R835	0699-3984	1	RESISTOR 38.3K +-1% .063W TKF TC0+-200	09891	RK73H1J3832F
R837	0699-3970	1	RESISTOR 10K +-1% .063W TKF TC0+-200	09891	RK73H1J1002F
R839	0699-3955	1	RESISTOR 2.15K +-1% .063W TKF TC0+-200	09891	RK73H1J2151F
R840	0699-3955	1	RESISTOR 2.15K +-1% .063W TKF TC0+-200	09891	RK73H1J2151F
R841	0699-3955	1	RESISTOR 2.15K +-1% .063W TKF TC0+-200	09891	RK73H1J2151F
R842	0699-3955	1	RESISTOR 2.15K +-1% .063W TKF TC0+-200	09891	RK73H1J2151F

 **Indicates factory-selected value*

Agilent Part Number E4401-60224
Digital Demod RF

Reference Designator	Agilent Part Number	Qty	Description	Mgr Code	Mfr Part Number
R843	0699-3933	1	RESISTOR 237 +-1% .063W TKF TC0+-200	00746	MCR03-F-2370
R844	0699-3933	1	RESISTOR 237 +-1% .063W TKF TC0+-200	00746	MCR03-F-2370
R845	0699-3921	1	RESISTOR 75 +-1% .063W TKF TC0+-200	00746	MCR03-F-75R0
R846	0699-3921	1	RESISTOR 75 +-1% .063W TKF TC0+-200	00746	MCR03-F-75R0
R847	0699-3918	1	RESISTOR 51.1 +-1% .063W TKF TC0+-200	00746	MCR03-F-51R1
R848	0699-3918	1	RESISTOR 51.1 +-1% .063W TKF TC0+-200	00746	MCR03-F-51R1
R849	0699-3918	1	RESISTOR 51.1 +-1% .063W TKF TC0+-200	00746	MCR03-F-51R1
R850	0699-3918	1	RESISTOR 51.1 +-1% .063W TKF TC0+-200	00746	MCR03-F-51R1
R854	0699-3954	1	RESISTOR 1.96K +-1% .063W TKF TC0+-200	09891	RK73H1J1961F
R855	0699-3947	1	RESISTOR 1K +-1% .063W TKF TC0+-200	00746	MCR03-F-1001
R856	0699-3947	1	RESISTOR 1K +-1% .063W TKF TC0+-200	00746	MCR03-F-1001
R857	0699-3947	1	RESISTOR 1K +-1% .063W TKF TC0+-200	00746	MCR03-F-1001
R858	0699-3947	1	RESISTOR 1K +-1% .063W TKF TC0+-200	00746	MCR03-F-1001
R859	0699-3947	1	RESISTOR 1K +-1% .063W TKF TC0+-200	00746	MCR03-F-1001
R860	0699-3947	1	RESISTOR 1K +-1% .063W TKF TC0+-200	00746	MCR03-F-1001
R861	0699-3947	1	RESISTOR 1K +-1% .063W TKF TC0+-200	00746	MCR03-F-1001
R862	0699-3947	1	RESISTOR 1K +-1% .063W TKF TC0+-200	00746	MCR03-F-1001
R863	0699-3947	1	RESISTOR 1K +-1% .063W TKF TC0+-200	00746	MCR03-F-1001
R864	0699-3947	1	RESISTOR 1K +-1% .063W TKF TC0+-200	00746	MCR03-F-1001
R865	0699-3947	1	RESISTOR 1K +-1% .063W TKF TC0+-200	00746	MCR03-F-1001
R866	0699-3947	1	RESISTOR 1K +-1% .063W TKF TC0+-200	00746	MCR03-F-1001
R867	0699-3947	1	RESISTOR 1K +-1% .063W TKF TC0+-200	00746	MCR03-F-1001
R868	0699-3947	1	RESISTOR 1K +-1% .063W TKF TC0+-200	00746	MCR03-F-1001
R869	0699-3947	1	RESISTOR 1K +-1% .063W TKF TC0+-200	00746	MCR03-F-1001
R870	0699-3947	1	RESISTOR 1K +-1% .063W TKF TC0+-200	00746	MCR03-F-1001
R871	0699-3947	1	RESISTOR 1K +-1% .063W TKF TC0+-200	00746	MCR03-F-1001
R872	0699-3947	1	RESISTOR 1K +-1% .063W TKF TC0+-200	00746	MCR03-F-1001
R873	0699-3947	1	RESISTOR 1K +-1% .063W TKF TC0+-200	00746	MCR03-F-1001
R874	0699-3947	1	RESISTOR 1K +-1% .063W TKF TC0+-200	00746	MCR03-F-1001
R875	0699-3947	1	RESISTOR 1K +-1% .063W TKF TC0+-200	00746	MCR03-F-1001

Agilent Part Number E4401-60224
Digital Demod RF

Reference Designator	Agilent Part Number	Qty	Description	Mgr Code	Mfr Part Number
R876	0699-3947	1	RESISTOR 1K +-1% .063W TKF TC0+-200	00746	MCR03-F-1001
R877	0699-3947	1	RESISTOR 1K +-1% .063W TKF TC0+-200	00746	MCR03-F-1001
R878	0699-3947	1	RESISTOR 1K +-1% .063W TKF TC0+-200	00746	MCR03-F-1001
R879	0699-3947	1	RESISTOR 1K +-1% .063W TKF TC0+-200	00746	MCR03-F-1001
R880	0699-3947	1	RESISTOR 1K +-1% .063W TKF TC0+-200	00746	MCR03-F-1001
R881	0699-3947	1	RESISTOR 1K +-1% .063W TKF TC0+-200	00746	MCR03-F-1001
R882	0699-3947	1	RESISTOR 1K +-1% .063W TKF TC0+-200	00746	MCR03-F-1001
R883	0699-3914	1	RESISTOR 34.8 +-1% .063W TKF TC0+-200	00746	MCR03-F-34R8
R884	0699-3927	1	RESISTOR 133 +-1% .063W TKF TC0+-200	00746	MCR03-F-1330
R887	0699-3927	1	RESISTOR 133 +-1% .063W TKF TC0+-200	00746	MCR03-F-1330
R888	0699-3935	1	RESISTOR 287 +-1% .063W TKF TC0+-200	00746	MCR03-F-2870
R889	0699-3913	1	RESISTOR 31.6 +-1% .063W TKF TC0+-200	09891	RK73H1J31R6F
R890	0699-3924	1	RESISTOR 100 +-1% .063W TKF TC0+-200	00746	MCR03-F-1000
R891	0699-3924	1	RESISTOR 100 +-1% .063W TKF TC0+-200	00746	MCR03-F-1000
R892	0699-3924	1	RESISTOR 100 +-1% .063W TKF TC0+-200	00746	MCR03-F-1000
R893	0699-3924	1	RESISTOR 100 +-1% .063W TKF TC0+-200	00746	MCR03-F-1000
R894	0699-3918	1	RESISTOR 51.1 +-1% .063W TKF TC0+-200	00746	MCR03-F-51R1
R895	0699-3918	1	RESISTOR 51.1 +-1% .063W TKF TC0+-200	00746	MCR03-F-51R1
R896	0699-3918	1	RESISTOR 51.1 +-1% .063W TKF TC0+-200	00746	MCR03-F-51R1
R897	0699-3918	1	RESISTOR 51.1 +-1% .063W TKF TC0+-200	00746	MCR03-F-51R1
R900	0699-3918	1	RESISTOR 51.1 +-1% .063W TKF TC0+-200	00746	MCR03-F-51R1
R903	0699-3970	1	RESISTOR 10K +-1% .063W TKF TC0+-200	09891	RK73H1J1002F
R904	0699-3970	1	RESISTOR 10K +-1% .063W TKF TC0+-200	09891	RK73H1J1002F
R905	0699-3918	1	RESISTOR 51.1 +-1% .063W TKF TC0+-200	00746	MCR03-F-51R1
R906	0699-3915	1	RESISTOR 38.3 +-1% .063W TKF TC0+-200	09891	RK73H1J38R3F
R907	0699-3928	1	RESISTOR 147 +-1% .063W TKF TC0+-200	00746	MCR03-F-1470
R908	0699-3928	1	RESISTOR 147 +-1% .063W TKF TC0+-200	00746	MCR03-F-1470
R909	0699-3918	1	RESISTOR 51.1 +-1% .063W TKF TC0+-200	00746	MCR03-F-51R1
R911	0699-3914	1	RESISTOR 34.8 +-1% .063W TKF TC0+-200	00746	MCR03-F-34R8
R912	0699-3955	1	RESISTOR 2.15K +-1% .063W TKF TC0+-200	09891	RK73H1J2151F

 **Indicates factory-selected value*

Agilent Part Number E4401-60224
Digital Demod RF

Reference Designator	Agilent Part Number	Qty	Description	Mgr Code	Mfr Part Number
R914	0699-3987	1	RESISTOR 51.1K +-1% .063W TKF TC0+-200	09891	RK73H1J5112F
R915	0699-3993	1	RESISTOR 100K +-1% .063W TKF TC0+-200	09891	RK73H1J1003F
R916	0699-3970	1	RESISTOR 10K +-1% .063W TKF TC0+-200	09891	RK73H1J1002F
R917	0699-3987	1	RESISTOR 51.1K +-1% .063W TKF TC0+-200	09891	RK73H1J5112F
R918	0699-3987	1	RESISTOR 51.1K +-1% .063W TKF TC0+-200	09891	RK73H1J5112F
R919	0699-3980	1	RESISTOR 26.1K +-1% .063W TKF TC0+-100	09891	RK73H1J2612F
R920	0699-3970	1	RESISTOR 10K +-1% .063W TKF TC0+-200	09891	RK73H1J1002F
R921	0699-3970	1	RESISTOR 10K +-1% .063W TKF TC0+-200	09891	RK73H1J1002F
R922	0699-3970	1	RESISTOR 10K +-1% .063W TKF TC0+-200	09891	RK73H1J1002F
R923	0699-3970	1	RESISTOR 10K +-1% .063W TKF TC0+-200	09891	RK73H1J1002F
R924	0699-3985	1	RESISTOR 42.2K +-1% .063W TKF TC0+-200	09891	RK73H1J4222F
R926	0699-3970	1	RESISTOR 10K +-1% .063W TKF TC0+-200	09891	RK73H1J1002F
R927	0699-3964	1	RESISTOR 5.11K +-1% .063W TKF TC0+-200	09891	RK73H1J5111F
R928	0699-3955	1	RESISTOR 2.15K +-1% .063W TKF TC0+-200	09891	RK73H1J2151F
R929	0699-3955	1	RESISTOR 2.15K +-1% .063W TKF TC0+-200	09891	RK73H1J2151F
R930	0699-3954	1	RESISTOR 1.96K +-1% .063W TKF TC0+-200	09891	RK73H1J1961F
R931	0699-3947	1	RESISTOR 1K +-1% .063W TKF TC0+-200	00746	MCR03-F-1001
R932	0699-3941	1	RESISTOR 511 +-1% .063W TKF TC0+-200	00746	MCR03-F-5110
R933	0699-3924	1	RESISTOR 100 +-1% .063W TKF TC0+-200	00746	MCR03-F-1000
R934	0699-3924	1	RESISTOR 100 +-1% .063W TKF TC0+-200	00746	MCR03-F-1000
R935	0699-3901	1	RESISTOR 10 +-1% .063W TKF TC0+-200	00746	MCR03-F-10R0
R936	0699-3901	1	RESISTOR 10 +-1% .063W TKF TC0+-200	00746	MCR03-F-10R0
R937	0699-3901	1	RESISTOR 10 +-1% .063W TKF TC0+-200	00746	MCR03-F-10R0
R938	0699-3901	1	RESISTOR 10 +-1% .063W TKF TC0+-200	00746	MCR03-F-10R0
R939	0699-3574	1	RESISTOR 0 .0625W TKF	09891	RM73Z1JT
R941	0699-3935	1	RESISTOR 287 +-1% .063W TKF TC0+-200	00746	MCR03-F-2870
R942	0699-3935	1	RESISTOR 287 +-1% .063W TKF TC0+-200	00746	MCR03-F-2870
R943	0699-3935	1	RESISTOR 287 +-1% .063W TKF TC0+-200	00746	MCR03-F-2870
R944	0699-3935	1	RESISTOR 287 +-1% .063W TKF TC0+-200	00746	MCR03-F-2870
R945	0699-3918	1	RESISTOR 51.1 +-1% .063W TKF TC0+-200	00746	MCR03-F-51R1

Agilent Part Number E4401-60224
Digital Demod RF

Reference Designator	Agilent Part Number	Qty	Description	Mgr Code	Mfr Part Number
R946	0699-3918	1	RESISTOR 51.1 +-1% .063W TKF TC0+-200	00746	MCR03-F-51R1
R947	0699-3947	1	RESISTOR 1K +-1% .063W TKF TC0+-200	00746	MCR03-F-1001
R948	0699-3947	1	RESISTOR 1K +-1% .063W TKF TC0+-200	00746	MCR03-F-1001
R949	0699-3947	1	RESISTOR 1K +-1% .063W TKF TC0+-200	00746	MCR03-F-1001
R950	0699-4016	1	RESISTOR 1M +-1% .063W TKF TC0+-200	00746	MCR03-F-1004
R951	0699-4016	1	RESISTOR 1M +-1% .063W TKF TC0+-200	00746	MCR03-F-1004
R952	0699-4016	1	RESISTOR 1M +-1% .063W TKF TC0+-200	00746	MCR03-F-1004
R953	0699-3993	1	RESISTOR 100K +-1% .063W TKF TC0+-200	09891	RK73H1J1003F
R954	0699-3987	1	RESISTOR 51.1K +-1% .063W TKF TC0+-200	09891	RK73H1J5112F
R955	0699-3986	1	RESISTOR 46.4K +-1% .063W TKF TC0+-200	09891	RK73H1J4642F
R956	0699-3936	1	RESISTOR 316 +-1% .063W TKF TC0+-200	00746	MCR03-F-3160
R957	0699-3970	1	RESISTOR 10K +-1% .063W TKF TC0+-200	09891	RK73H1J1002F
R958	0699-3970	1	RESISTOR 10K +-1% .063W TKF TC0+-200	09891	RK73H1J1002F
R959	0699-3964	1	RESISTOR 5.11K +-1% .063W TKF TC0+-200	09891	RK73H1J5111F
R960	0699-3964	1	RESISTOR 5.11K +-1% .063W TKF TC0+-200	09891	RK73H1J5111F
R961	0699-3968	1	RESISTOR 8.25K +-1% .063W TKF TC0+-200	09891	RK73H1J8251F
R962	0699-3931	1	RESISTOR 196 +-1% .063W TKF TC0+-200	09891	RK73H1J1960F
R963	0699-3941	1	RESISTOR 511 +-1% .063W TKF TC0+-200	00746	MCR03-F-5110
R964	0699-4016	1	RESISTOR 1M +-1% .063W TKF TC0+-200	00746	MCR03-F-1004
R965	0699-3970	1	RESISTOR 10K +-1% .063W TKF TC0+-200	09891	RK73H1J1002F
R966	0699-3970	1	RESISTOR 10K +-1% .063W TKF TC0+-200	09891	RK73H1J1002F
R967	0699-3970	1	RESISTOR 10K +-1% .063W TKF TC0+-200	09891	RK73H1J1002F
R968	0699-3961	1	RESISTOR 3.83K +-1% .063W TKF TC0+-200	09891	RK73H1J3831F
R969	0699-3947	1	RESISTOR 1K +-1% .063W TKF TC0+-200	00746	MCR03-F-1001
R970	0699-3947	1	RESISTOR 1K +-1% .063W TKF TC0+-200	00746	MCR03-F-1001
R971	0699-3947	1	RESISTOR 1K +-1% .063W TKF TC0+-200	00746	MCR03-F-1001
R972	0699-3947	1	RESISTOR 1K +-1% .063W TKF TC0+-200	00746	MCR03-F-1001
R973	0699-3935	1	RESISTOR 287 +-1% .063W TKF TC0+-200	00746	MCR03-F-2870
R974	0699-3918	1	RESISTOR 51.1 +-1% .063W TKF TC0+-200	00746	MCR03-F-51R1
R975	0699-3970	1	RESISTOR 10K +-1% .063W TKF TC0+-200	09891	RK73H1J1002F

 **Indicates factory-selected value*

Agilent Part Number E4401-60224
Digital Demod RF

Reference Designator	Agilent Part Number	Qty	Description	Mgr Code	Mfr Part Number
R976	0699-3909	1	RESISTOR 21.5 +-1% .063W TKF TC0+-200	09891	RK73H1J21R5F
R977	0699-3574	1	RESISTOR 0 .0625W TKF	09891	RM73Z1JT
R978	0699-2932	1	RESISTOR 3.6K +-0.1% TF TC0+-25	02499	W1206R033601BT
R979	0699-2932	1	RESISTOR 3.6K +-0.1% TF TC0+-25	02499	W1206R033601BT
R980	0699-2932	1	RESISTOR 3.6K +-0.1% TF TC0+-25	02499	W1206R033601BT
T1	9100-5555	1	TRANSFORMER-PULSE; PRI IND: 155 nH	12396	TTH-13
U409	E4401-80104	1		28480	E4401-80104
U411	1826-1912	1	IC OP AMP H-SLEW-RATE DUAL 8 PIN	36633	MC34072DR2
U412	1826-1912	1	IC OP AMP H-SLEW-RATE DUAL 8 PIN	36633	MC34072DR2
U415	1826-2147	1	ANALOG MULTIPLEXER 8 CHNL 16 -P-SOIC	05524	DG408DY
U416	1826-1985	1	ANALOG SWITCH 4 SPST 16 -P-SOIC	05524	DG411DY
U417	1826-1925	1	IC OP AMP LOW-NOISE SINGLE 8 PIN	03285	OP-27GS
U418	1826-1925	1	IC OP AMP LOW-NOISE SINGLE 8 PIN	03285	OP-27GS
U419	1826-1912	1	IC OP AMP H-SLEW-RATE DUAL 8 PIN	36633	MC34072DR2
U420	1826-1838	1	IC PWR MGT-V-REF-FXD 4.95/5.05V 8 PINS	10858	LT1021DCS8-5
U422	1821-1821	1	IC-ASIC GT-ARY 60K GATES CMOS 60081	08779	M60081L-0124FP
U424	1820-7246	1	IC CNTR CMOS/AC BIN SYNC/ASYNC	02237	74AC161SCX.
U425	1821-2431	1	IC GATE CMOS NAND QUAD	02237	74VHC00MX
U427	1821-2431	1	IC GATE CMOS NAND QUAD	02237	74VHC00MX
U428	1821-2431	1	IC GATE CMOS NAND QUAD	02237	74VHC00MX
U430	1821-2431	1	IC GATE CMOS NAND QUAD	02237	74VHC00MX
U434	1821-2432	1	IC FF CMOS D-TYPE DUAL	02237	74VHC74MX
U435	1821-2432	1	IC FF CMOS D-TYPE DUAL	02237	74VHC74MX
U436	1820-5935	1	IC CNTR CMOS/AC BIN UP/DOWN SYNCHR 16-SO	02237	74AC169SC
U437	1820-5935	1	IC CNTR CMOS/AC BIN UP/DOWN SYNCHR 16-SO	02237	74AC169SC
U444	E4401-80103	1		28480	E4401-80103
U447	1826-3303	1	MICROWAVE SWITCH SP4T 24 -P-SOIC	02788	SW-419PIN

Agilent Part Number E4401-60224
Digital Demod RF

Reference Designator	Agilent Part Number	Qty	Description	Mgr Code	Mfr Part Number
U448	1826-3303	1	MICROWAVE SWITCH SP4T 24 -P-SOIC	02788	SW-419PIN
U449	1826-1912	1	IC OP AMP H-SLEW-RATE DUAL 8 PIN	36633	MC34072DR2
U457	1826-4308	1	MICROWAVE SWITCH SPDT 8-PIN SOIC	02788	SW-239
U464	1826-1985	1	ANALOG SWITCH 4 SPST 16 -P-SOIC	05524	DG411DY
U465	1826-1985	1	ANALOG SWITCH 4 SPST 16 -P-SOIC	05524	DG411DY
U467	1826-1925	1	IC OP AMP LOW-NOISE SINGLE 8 PIN	03285	OP-27GS
U468	1826-3985	1	IC OP AMP PRCN SINGLE 8 PIN PLSTC-SOIC	03285	OP184FS
U469	1826-1925	1	IC OP AMP LOW-NOISE SINGLE 8 PIN	03285	OP-27GS
U470	1826-1925	1	IC OP AMP LOW-NOISE SINGLE 8 PIN	03285	OP-27GS
U471	1826-1912	1	IC OP AMP H-SLEW-RATE DUAL 8 PIN	36633	MC34072DR2
U472	1826-1912	1	IC OP AMP H-SLEW-RATE DUAL 8 PIN	36633	MC34072DR2
U474	1826-1912	1	IC OP AMP H-SLEW-RATE DUAL 8 PIN	36633	MC34072DR2
U477	1821-2446	1	IC-INTERFACE DRVR CMOS	02788	SWD-119PIN
U479	1821-2446	1	IC-INTERFACE DRVR CMOS	02788	SWD-119PIN
U481	1821-1821	1	IC-ASIC GT-ARY 60K GATES CMOS 60081	08779	M60081L-0124FP
U482	1821-1821	1	IC-ASIC GT-ARY 60K GATES CMOS 60081	08779	M60081L-0124FP
U483	1820-7246	1	IC CNTR CMOS/AC BIN SYNC/ASYNC	02237	74AC161SCX.
U484	1820-7246	1	IC CNTR CMOS/AC BIN SYNC/ASYNC	02237	74AC161SCX.
U485	1821-2431	1	IC GATE CMOS NAND QUAD	02237	74VHC00MX
U486	1821-2431	1	IC GATE CMOS NAND QUAD	02237	74VHC00MX
U487	1821-2431	1	IC GATE CMOS NAND QUAD	02237	74VHC00MX
U488	1821-2431	1	IC GATE CMOS NAND QUAD	02237	74VHC00MX
U489	1821-2431	1	IC GATE CMOS NAND QUAD	02237	74VHC00MX
U490	1821-2431	1	IC GATE CMOS NAND QUAD	02237	74VHC00MX
U491	1821-2431	1	IC GATE CMOS NAND QUAD	02237	74VHC00MX
U492	1821-2432	1	IC FF CMOS D-TYPE DUAL	02237	74VHC74MX
U493	1821-2432	1	IC FF CMOS D-TYPE DUAL	02237	74VHC74MX
U494	1821-2432	1	IC FF CMOS D-TYPE DUAL	02237	74VHC74MX
U495	1821-2432	1	IC FF CMOS D-TYPE DUAL	02237	74VHC74MX

 **Indicates factory-selected value*

Agilent Part Number E4401-60224
Digital Demod RF

Reference Designator	Agilent Part Number	Qty	Description	Mgr Code	Mfr Part Number
U496	1820-5935	1	IC CNTR CMOS/AC BIN UP/DOWN SYNCHR 16-SO	02237	74AC169SC
U497	1820-5935	1	IC CNTR CMOS/AC BIN UP/DOWN SYNCHR 16-SO	02237	74AC169SC
U498	1821-2432	1	IC FF CMOS D-TYPE DUAL	02237	74VHC74MX
U503	1826-4308	1	MICROWAVE SWITCH SPDT 8-PIN SOIC	02788	SW-239
U504	1826-4308	1	MICROWAVE SWITCH SPDT 8-PIN SOIC	02788	SW-239
U505	1826-3345	1	D/A 8-BIT 16-P-SOIC BPLR	03285	AD8803AR
U506	1826-3034	1	IC OP AMP V-FOLR SINGLE 8 PIN PLSTC-SOIC	03285	AD603AR
U507	1826-3034	1	IC OP AMP V-FOLR SINGLE 8 PIN PLSTC-SOIC	03285	AD603AR
U508	1826-3034	1	IC OP AMP V-FOLR SINGLE 8 PIN PLSTC-SOIC	03285	AD603AR
U510	1826-2133	1	IC RF/IF AMPL WB 4 PIN U-WAVE-PILL	01542	MSA-1105
U511	1821-2432	1	IC FF CMOS D-TYPE DUAL	02237	74VHC74MX
U512	1826-1912	1	IC OP AMP H-SLEW-RATE DUAL 8 PIN	36633	MC34072DR2
U514	1826-4308	1	MICROWAVE SWITCH SPDT 8-PIN SOIC	02788	SW-239
U515	1826-4308	1	MICROWAVE SWITCH SPDT 8-PIN SOIC	02788	SW-239
U516	1826-4308	1	MICROWAVE SWITCH SPDT 8-PIN SOIC	02788	SW-239
U517	1826-3433	1	IC OP AMP WB 8 PIN PLSTC-SOIC	03285	AD9631AR
U518	1826-3433	1	IC OP AMP WB 8 PIN PLSTC-SOIC	03285	AD9631AR
U519	1826-3433	1	IC OP AMP WB 8 PIN PLSTC-SOIC	03285	AD9631AR
U520	1821-2446	1	IC-INTERFACE DRVR CMOS	02788	SWD-119PIN
U522	1826-3985	1	IC OP AMP PRCN SINGLE 8 PIN PLSTC-SOIC	03285	OP184FS
U523	1826-3034	1	IC OP AMP V-FOLR SINGLE 8 PIN PLSTC-SOIC	03285	AD603AR
U524	1826-3034	1	IC OP AMP V-FOLR SINGLE 8 PIN PLSTC-SOIC	03285	AD603AR
U525	1826-2926	1	ANALOG SWITCH SPST 8 -P-SOIC	05524	DG419DY
U526	1826-1912	1	IC OP AMP H-SLEW-RATE DUAL 8 PIN	36633	MC34072DR2
U527	1826-1594	1	IC COMPARATOR GP SINGLE 8 PIN PLSTC-SOIC	03406	LM311M
U528	1826-1572	1	IC COMPARATOR PRCN DUAL 8 PIN PLSTC-SOIC	02910	LM393D
U529	1826-3433	1	IC OP AMP WB 8 PIN PLSTC-SOIC	03285	AD9631AR

Agilent Part Number E4401-60224
Digital Demod RF

Reference Designator	Agilent Part Number	Qty	Description	Mgr Code	Mfr Part Number
U530	1826-3433	1	IC OP AMP WB 8 PIN PLSTC-SOIC	03285	AD9631AR
U531	1826-1572	1	IC COMPARATOR PRCN DUAL 8 PIN PLSTC-SOIC	02910	LM393D
U532	1826-1572	1	IC COMPARATOR PRCN DUAL 8 PIN PLSTC-SOIC	02910	LM393D
U533	1826-3433	1	IC OP AMP WB 8 PIN PLSTC-SOIC	03285	AD9631AR
U534	1826-1912	1	IC OP AMP H-SLEW-RATE DUAL 8 PIN	36633	MC34072DR2
Y1	0410-0405	1	PRECISION BULK MODE-AT CRYSTAL QUARTZ	04458	BK3-1B-10MHZ
Z1	0955-0230	1	U-WAVE MIXER 500 MHZ MAX	11171	CMP-201

 **Indicates factory-selected value*

D-E4401-60224-2

SYM	REVISIONS	APPROVED	DATE
A	AS ISSUED PER ECO 53-15124 /DD		
B	CHANGED PER CO 63825 /LN		

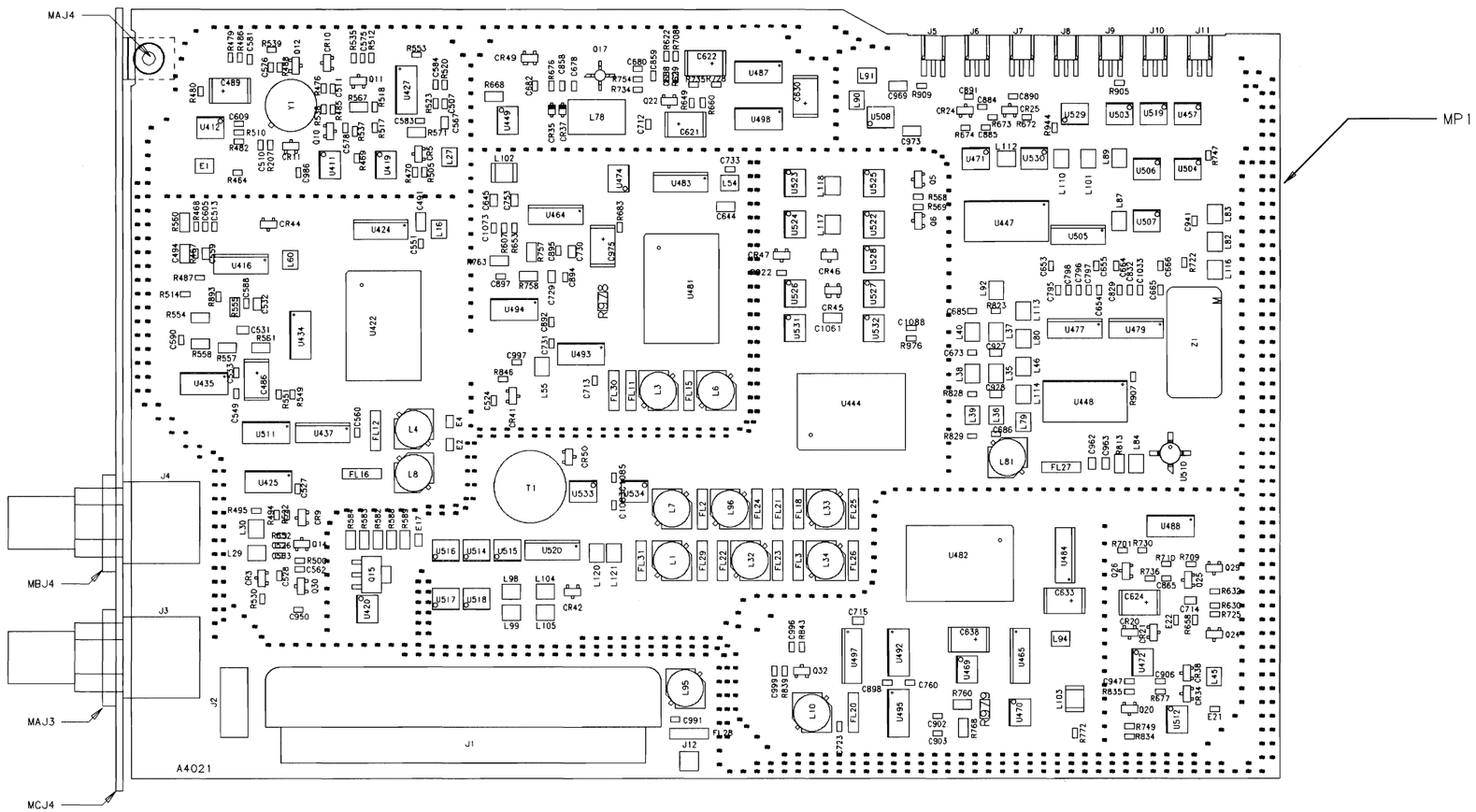

NOTES: UNLESS OTHERWISE SPECIFIED

1. SEE MATERIAL LIST: E4401-60224
2. THIS ASSEMBLY USES RAW BOARD NUMBER: E4401-20224
3. THIS BOARD CONTAINS .010" VIAS IN PADS: ☐ YES ☒ NO
4. THIS BOARD CONTAINS CROSSHATCHED COMPONENTS WHICH ARE NOT LOADED: ☐ YES ☒ NO
5. Y1 AND Z1 MUST NOT BE SPACED OFF THE BOARD.
6. CONNECTORS J5-11, EXCESS SOLDER ON AND AROUND CONNECTORS IS ACCEPTABLE
7. MAJ3 AND MBJ4, TORQUE TO 20 IN LB.
8. MAJ4 TORQUE TO 5 IN LB

TOP SIDE

AGILENT TECHNOLOGIES RESTRICTED
THIS DOCUMENT CONTAINS CONFIDENTIAL, PROPRIETARY INFORMATION THAT IS AGILENT TECHNOLOGIES PROPERTY. DO NOT DISCLOSE TO OR DUPLICATE FOR OTHERS EXCEPT AS AUTHORIZED BY AGILENT TECHNOLOGIES.

UNLESS OTHERWISE SPECIFIED, DIMENSIONS ARE IN INCHES.
TOLERANCES: XX.XXX ±.010, XX.XX ±.02
THIRD ANGLE PROJECTION
DO NOT SCALE THIS DRAWING

DRAWN BY | DATE
ENGINEER/CHECKER | DATE
RELEASE TO PROD. | DATE
SUPERSEDES DWG.

ASSEMBLY, PWB
DIGITAL DEMOD RF
TITLE

MENTOR FILENAME
SCALE NONE
SHEET 1 OF 2
PART NUMBER E4401-60224
D-E4401-60224-2

Agilent

D-E4401-60224-2

SYM	REVISIONS	APPROVED	DATE
	SEE SHEET 1		

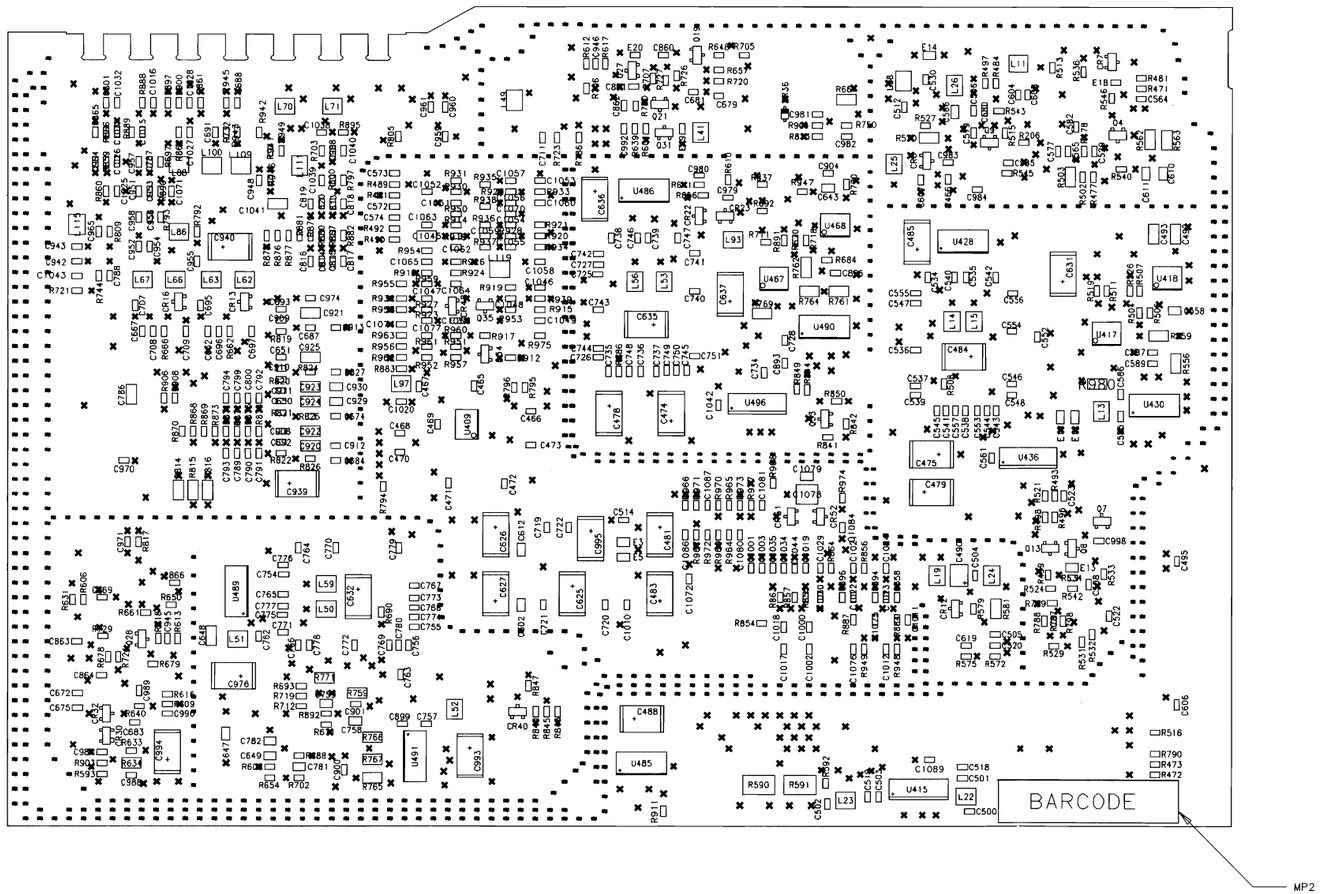

BOTTOM SIDE

AGILENT TECHNOLOGIES
RESTRICTED
THIS DOCUMENT CONTAINS CONFIDENTIAL, PROPRIETARY INFORMATION THAT IS AGILENT TECHNOLOGIES PROPERTY. DO NOT DISCLOSE TO OR DUPLICATE FOR OTHERS EXCEPT AS AUTHORIZED BY AGILENT TECHNOLOGIES.

UNLESS OTHERWISE SPECIFIED, DIMENSIONS ARE IN INCHES.
TOLERANCES: XX.XXX .010, XX.XX .02
THIRD ANGLE PROJECTION
DO NOT SCALE THIS DRAWING

DRAWN BY	DATE
ENGINEER/CHECKER	DATE
RELEASE TO PROD.	DATE
SUPERSEDES DWG	

ASSEMBLY, PWB
DIGITAL DEMOD RF
TITLE

MENTOR FILENAME
SCALE NONE
SHEET 2 OF 2
E4401-60224
PART NUMBER
D-E4401-60224-2

Agilent

D-E4401-60224-1

REV	INFORMATION	APPROVED	DATE
A	AS ISSUED ECO 53-15124 /DD		
B	CHANGED PER CO 63825 /LN		

1A CARD CAGE INTERFACE AND SEQUENCE GENERATOR

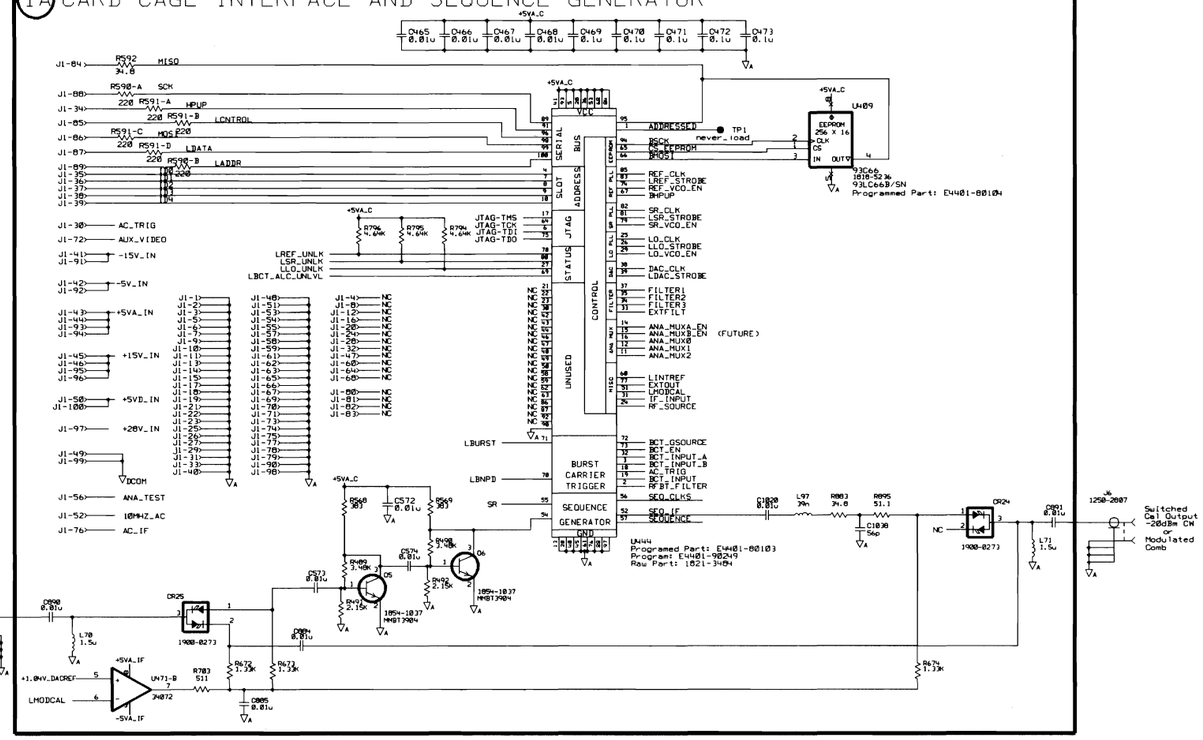

1B POWER SUPPLY FILTERS

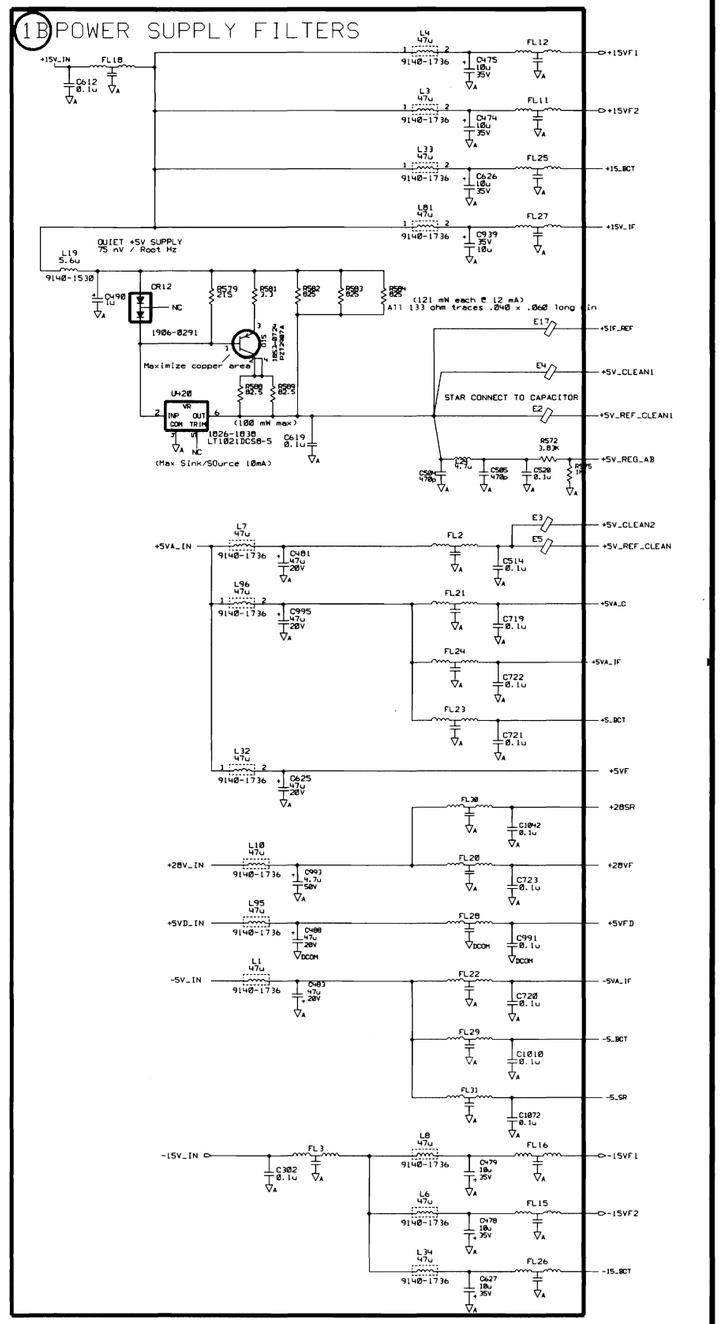

1C JTAG INTERFACE

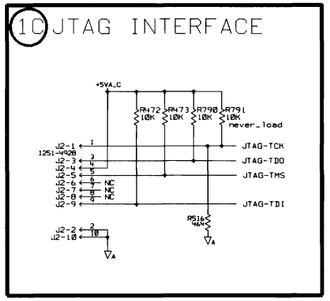

1D ANALOG INTERFACE

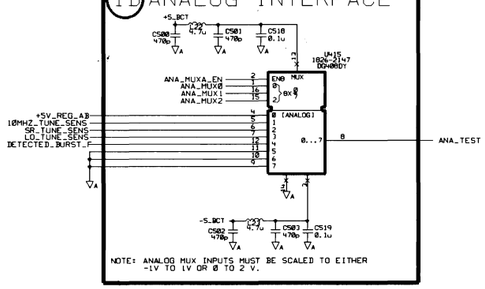

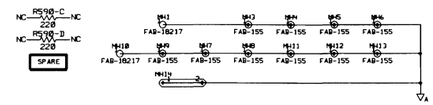

AGILENT TECHNOLOGIES RESTRICTED
THIS DOCUMENT CONTAINS CONFIDENTIAL. PROPRIETARY INFORMATION THAT IS AGILENT TECHNOLOGIES PROPERTY. DO NOT DISCLOSE TO OR DUPLICATE FOR OTHERS EXCEPT AS AUTHORIZED BY AGILENT TECHNOLOGIES.

LAST CHECKED	DATE	SCHEMATIC, PWA Digital Demod RF Board Control	A
ENGINEER	SHEET 1 OF 7	TITLE	
DRAWN BY	SIZE D	PATHNAME map_E4401/2022+/A4040_2/top sheet1	E4401-60224 PART NUMBER
	BA4040 ASSY. REV	A4040 MLB REV / 1 PAGE / 8 OF	D-E4401-60224-1 DWG. NO.

REVISIONS
SEE PAGE 1 FOR REVISION HISTORY

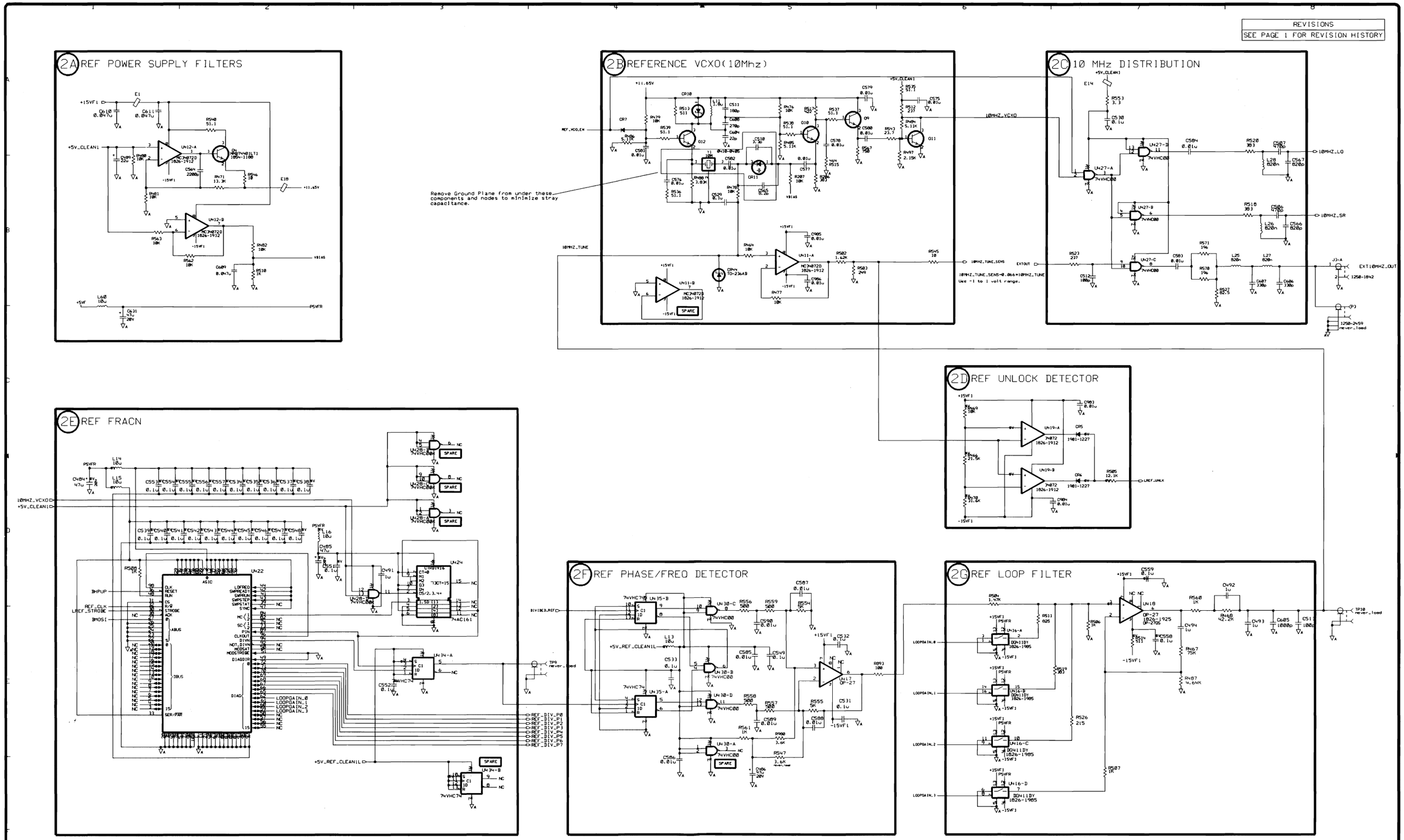

AGILENT TECHNOLOGIES RESTRICTED	LAST CHECKED	DATE	SCHEMATIC, PWA Digital Demod RF Board Reference PLL	A
THIS DOCUMENT CONTAINS CONFIDENTIAL. PROPRIETARY INFORMATION THAT IS AGILENT TECHNOLOGIES PROPERTY. DO NOT DISCLOSE TO OR DUPLICATE FOR OTHERS EXCEPT AS AUTHORIZED BY AGILENT TECHNOLOGIES.	ENGINEER	SHEET 2 OF 7	TITLE	E4401-60224 PART NUMBER
	DRAWN BY	SIZE D	PATHNAME: ep_E4401/20224/A040.2/top sheet2	
		BA4040 ASSY REV	A4040 BRD REV	2 8 PAGE OF	D-E4401-60224-1 DWG NO

REVISIONS
SEE PAGE 1 FOR REVISION HISTORY

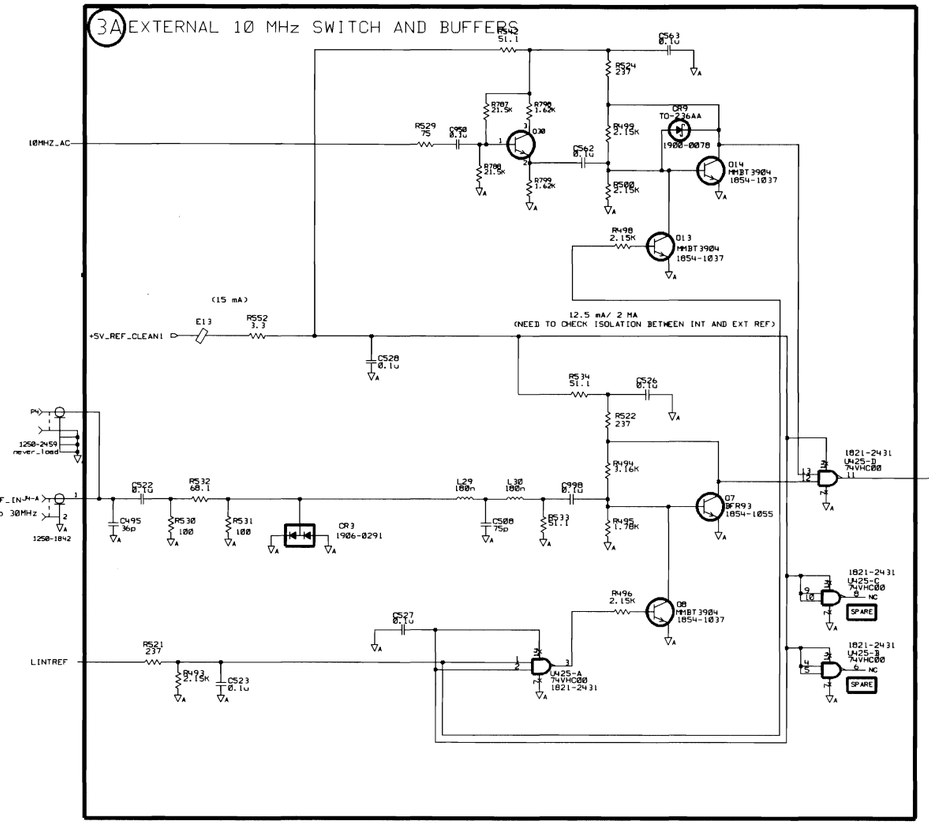

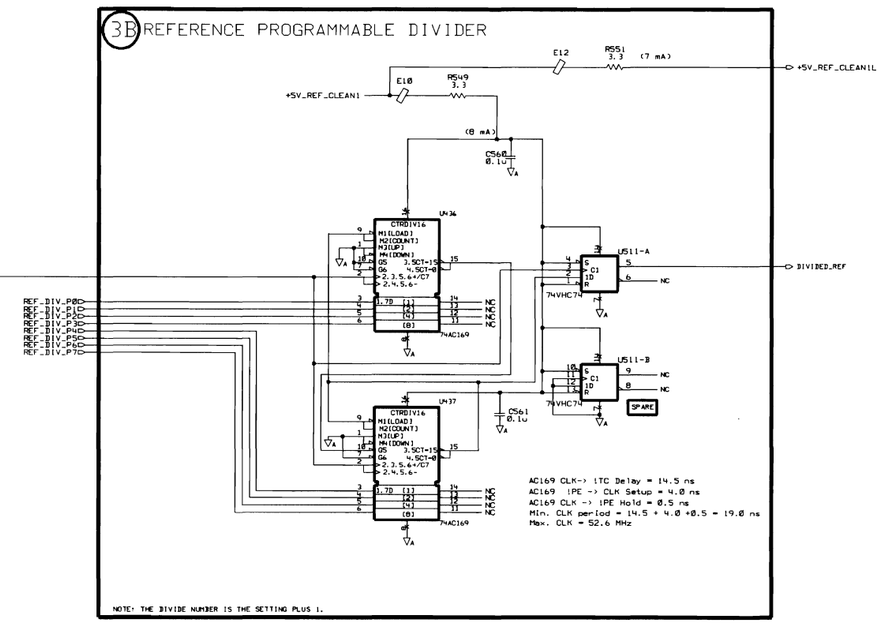

AGILENT TECHNOLOGIES
RESTRICTED
THIS DOCUMENT CONTAINS CONFIDENTIAL. PROPRIETARY INFORMATION THAT IS AGILENT TECHNOLOGIES PROPERTY. DO NOT DISCLOSE TO OR DUPLICATE FOR OTHERS EXCEPT AS AUTHORIZED BY AGILENT TECHNOLOGIES.

LAST CHECKED	DATE	SCHEMATIC, PWA Digital Demod RF Board Control	A
ENGINEER	SHEET 3 OF 7	TITLE	E4401-60224 PART NUMBER
DRAWN BY	SIZE D	PATHNAME BRP_E4401/20224/AN040_2/top sheet	
	BA4040 ASSY REV	A4040 BRD REV	3 PAGE 8 OF	D-E4401-60224-1 DWG NO

REVISIONS
SEE PAGE 1 FOR REVISION HISTORY

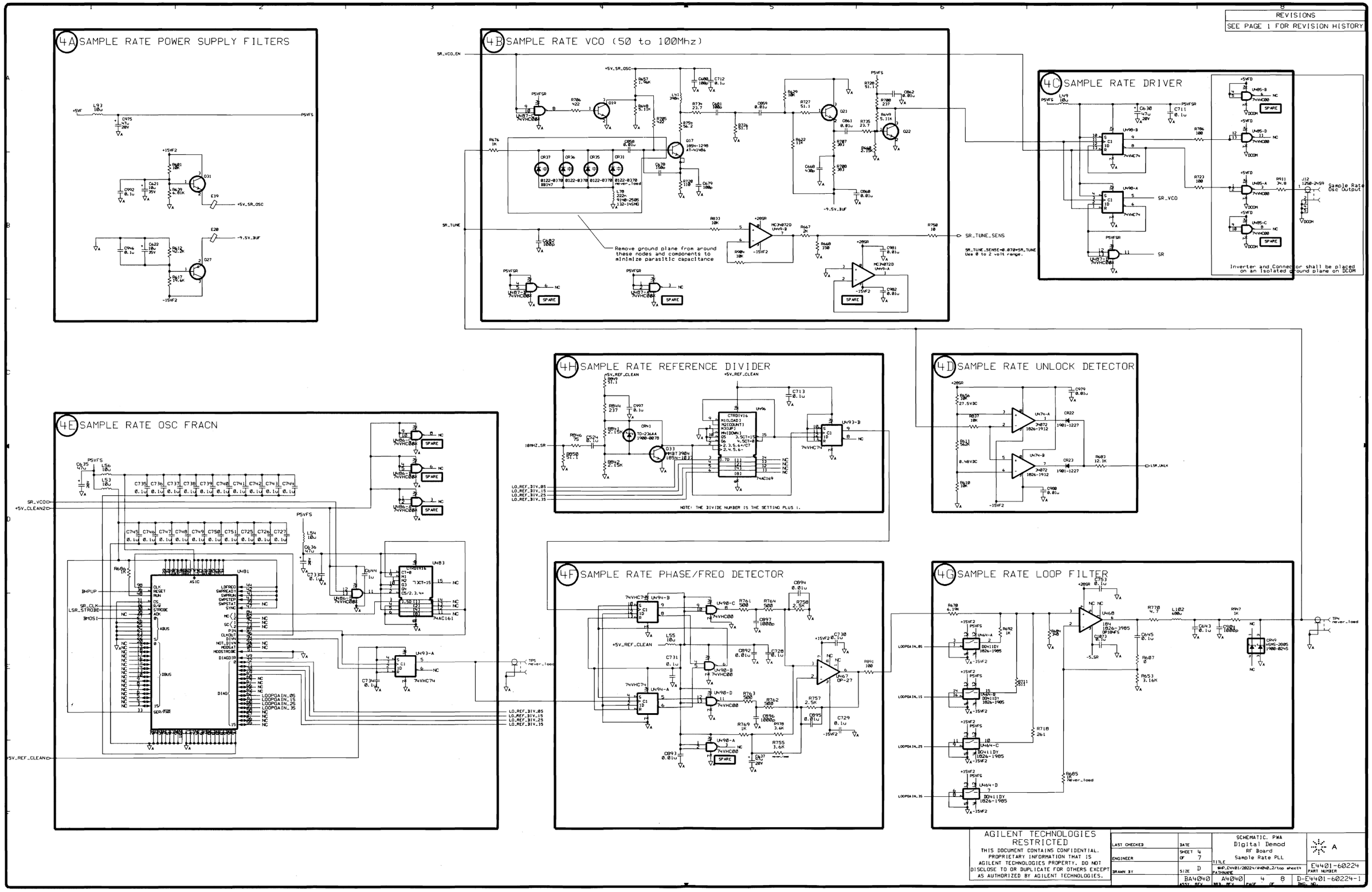

AGILENT TECHNOLOGIES RESTRICTED
THIS DOCUMENT CONTAINS CONFIDENTIAL, PROPRIETARY INFORMATION THAT IS AGILENT TECHNOLOGIES PROPERTY. DO NOT DISCLOSE TO OR DUPLICATE FOR OTHERS EXCEPT AS AUTHORIZED BY AGILENT TECHNOLOGIES.

LAST CHECKED	DATE	SCHEMATIC, PWA Digital Demod RF Board Sample Rate PLL	A
ENGINEER	SHEET 4 OF 7	TITLE	E4401-60224
DRAWN BY	SIZE D	PATHNAME: BMP_E4401/20224/A4040_2/top sheet4	PART NUMBER
	A4040 ASSY REV	A4040 BOM REV	4 PAGE 8 OF	D-E4401-60224-1 DWG NO

REVISIONS
SEE PAGE 1 FOR REVISION HISTORY

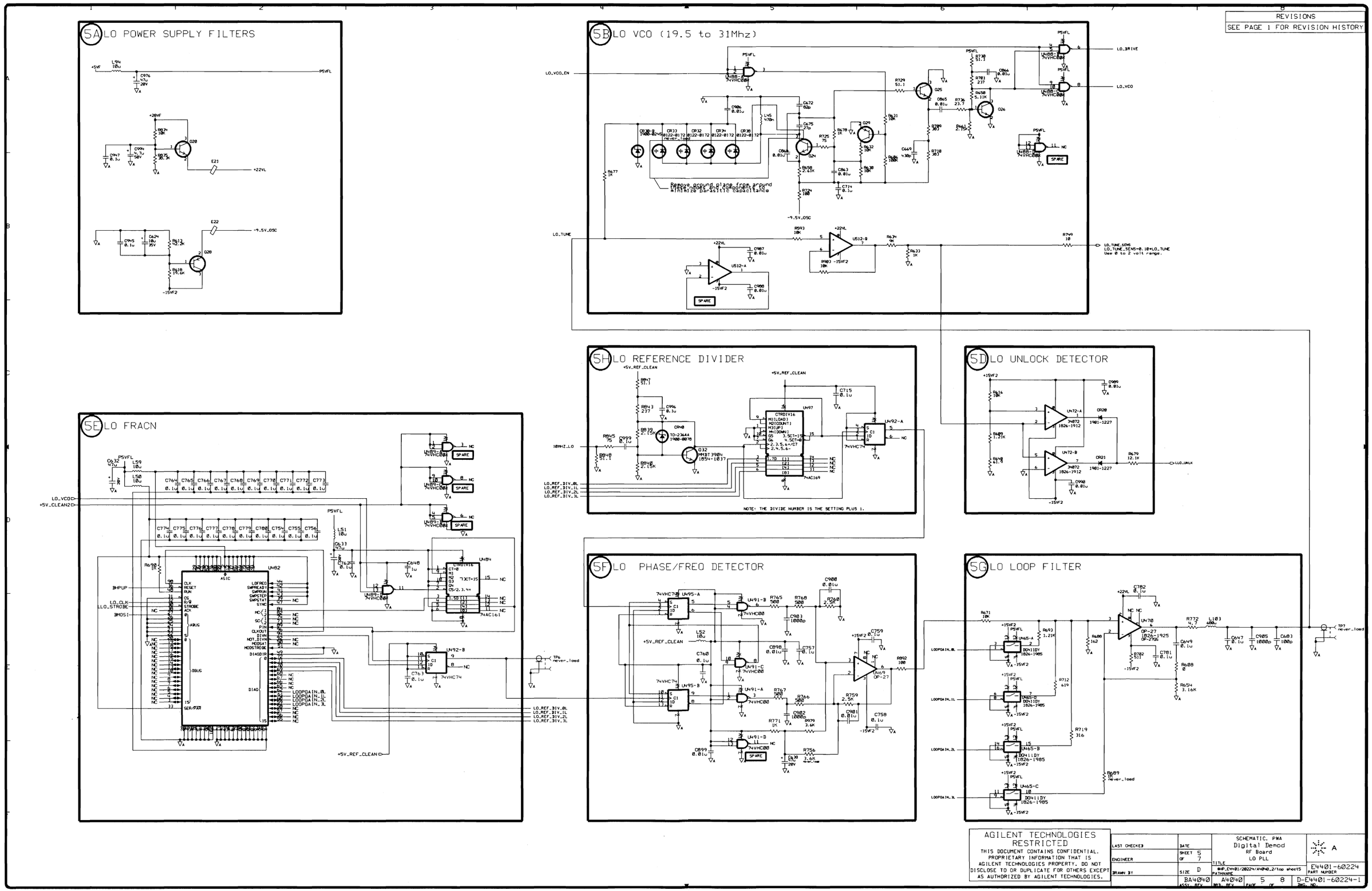

AGILENT TECHNOLOGIES RESTRICTED THIS DOCUMENT CONTAINS CONFIDENTIAL. PROPRIETARY INFORMATION THAT IS AGILENT TECHNOLOGIES PROPERTY. DO NOT DISCLOSE TO OR DUPLICATE FOR OTHERS EXCEPT AS AUTHORIZED BY AGILENT TECHNOLOGIES.	LAST CHECKED	DATE	SCHEMATIC, PWA Digital Demod RF Board LO PLL
	ENGINEER	SHEET 5 OF 7	TITLE RF_EN401/20224/AN@0_2/top sheet5
	DRAWN BY	SIZE D	PATHNAME
	BA4040 ASSY REV	A4040 MFG REV	5 PAGE OF 8

A

E4401-60224
PART NUMBER

D-E4401-60224-1
DWG NO

REVISIONS
SEE PAGE 1 FOR REVISION HISTORY

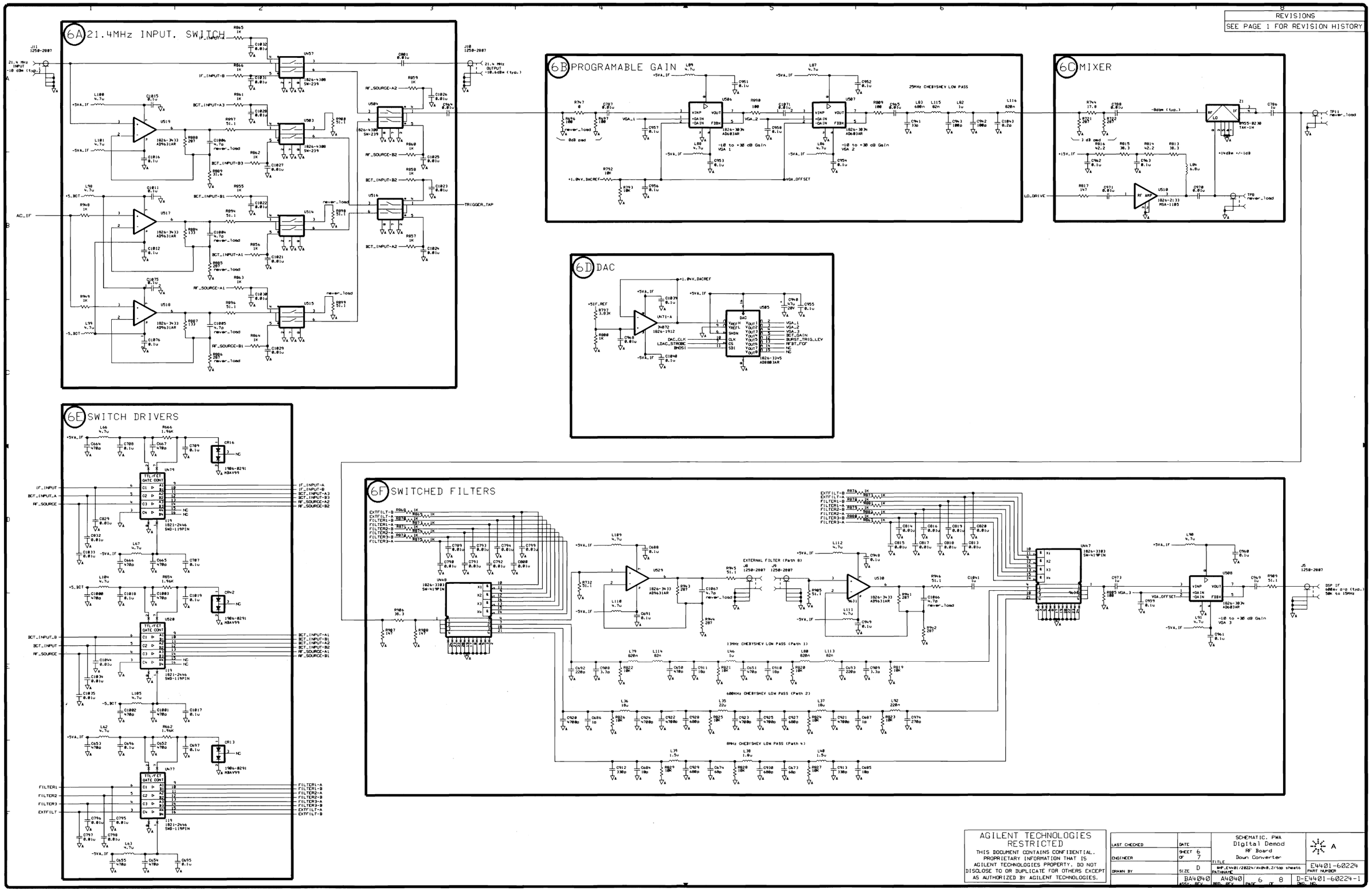

AGILENT TECHNOLOGIES
RESTRICTED
THIS DOCUMENT CONTAINS CONFIDENTIAL, PROPRIETARY INFORMATION THAT IS AGILENT TECHNOLOGIES PROPERTY. DO NOT DISCLOSE TO OR DUPLICATE FOR OTHERS EXCEPT AS AUTHORIZED BY AGILENT TECHNOLOGIES.

LAST CHECKED	DATE	SCHEMATIC, PWA Digital Demod RF Board Down Converter	A
ENGINEER	SHEET 6 OF 7	TITLE	E4401-60224
DRAWN BY	SIZE D	PATHNAME BHP_EN4B1/2822K/AN4B_2/top sheet6	PART NUMBER
	ASSY. REV. B4040	REV. A4040 PAGE 6 OF 8	DWG. NO. D-E4401-60224-1

REVISIONS
SEE PAGE 1 FOR REVISION HISTORY

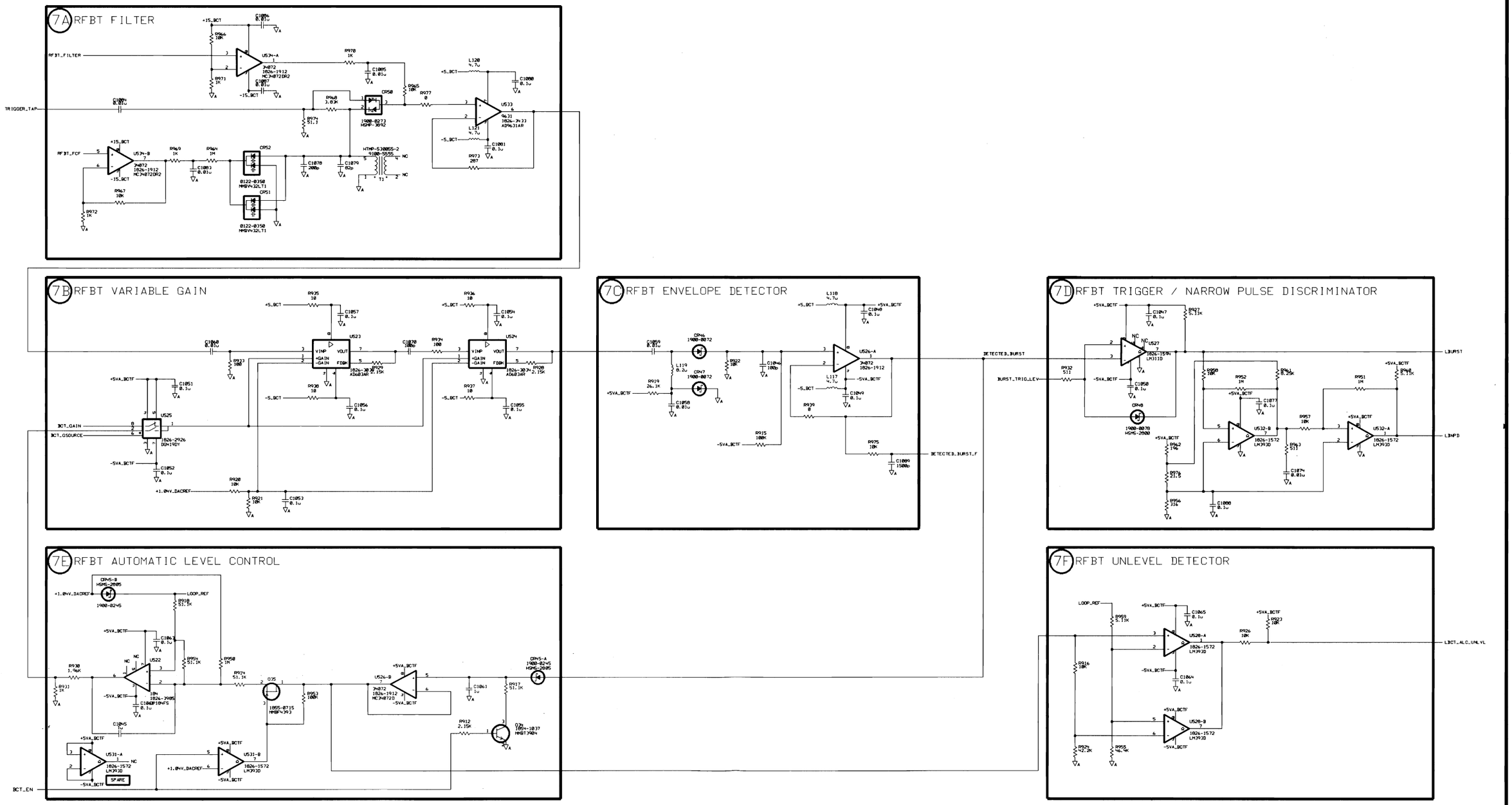

AGILENT TECHNOLOGIES
RESTRICTED
THIS DOCUMENT CONTAINS CONFIDENTIAL. PROPRIETARY INFORMATION THAT IS AGILENT TECHNOLOGIES PROPERTY. DO NOT DISCLOSE TO OR DUPLICATE FOR OTHERS EXCEPT AS AUTHORIZED BY AGILENT TECHNOLOGIES.

LAST CHECKED	DATE	SCHEMATIC. PWA Digital Demod RF Board RF Burst Trigger	A
ENGINEER	SHEET 7 OF 7	TITLE	E4401-60224 PART NUMBER
DRAWN BY	SIZE D	PATHNAME 84P_E4401/20224/A4040_2/top sheet7	
	BA4040 ASSY. REV	A4040 WRB. REV	7 PAGE 8 OF	D-E4401-60224-1 DWG. NO.

REVISIONS
SEE PAGE 1 FOR REVISION HISTORY

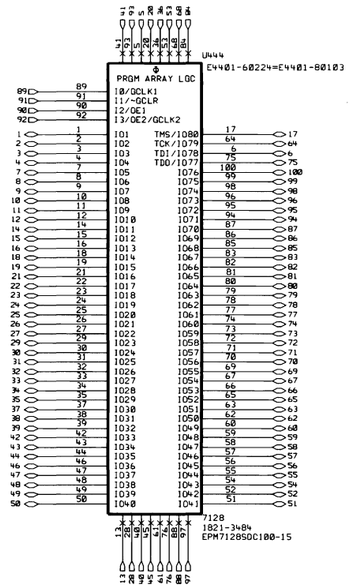

AGILENT TECHNOLOGIES
RESTRICTED
THIS DOCUMENT CONTAINS CONFIDENTIAL. PROPRIETARY INFORMATION THAT IS AGILENT TECHNOLOGIES PROPERTY. DO NOT DISCLOSE TO OR DUPLICATE FOR OTHERS EXCEPT AS AUTHORIZED BY AGILENT TECHNOLOGIES.

LAST CHECKED	DATE	SCHEMATIC, PWA Digital Demod RF Board Control	A
ENGINEER	SHEET 1 OF 1	TITLE	
DRAWN BY	SIZE C	$HP_E4401/20224/A4040_2/top/pal sheet1 PATHNAME	E4401-60224 PART NUMBER
	BA4040 ASSY. REV	A4040 BRD. REV	8 PAGE 8 OF 8	C-E4401-60224-1 DWG. NO.

Component-Level Information Packet for E7401-60003

Quasi Peak Detector

Agilent Technologies

Agilent Part Number: E7401-90045
Printed in Malaysia April 2001

Notice

The information contained in this document is subject to change without notice. Agilent Technologies makes no warranty of any kind with regard to this material, including but not limited to, the implied warranties of merchantability and fitness for a particular purpose. Agilent Technologies shall not be liable for errors contained herein or for incidental or consequential damages in connection with the furnishing, performance, or use of this material.

© Copyright Agilent Technologies Inc. 2000, 2001
All Rights Reserved. Reproduction, adaptation, or translation without prior written permission is prohibited, except as allowed under the copyright laws.

Agilent Part Number E7401-60003
Quasi Peak Detector

Reference Designator	Agilent Part Number	Qty	Description	Mgr Code	Mfr Part Number
C1	0160-5972	1	CAP-FXD 5.6pF 50 V CER C0G	06352	C2012COG1H5R6D
C2	0160-5959	1	CAP-FXD 33pF +-5% 50 V CER C0G	02010	08055A330JATA
C3	0160-5956	1	CAP-FXD 56pF +-5% 50 V CER C0G	02010	08055A560JATA
C4	0160-5956	1	CAP-FXD 56pF +-5% 50 V CER C0G	02010	08055A560JATA
C5	0160-6734	1	CAP-FXD 0.047uF +-10% 50 V CER X7R	02010	12065C473KATA
C6	0160-7217	1	CAP-FXD 20pF +-5% 50 V CER C0G	12340	C0805C200J5GAC
C7	0160-6097	1	CAP-FXD 560pF +-5% 50 V CER C0G	02010	12061A561JATA
C8	0160-7217	1	CAP-FXD 20pF +-5% 50 V CER C0G	12340	C0805C200J5GAC
C9	0160-6097	1	CAP-FXD 560pF +-5% 50 V CER C0G	02010	12061A561JATA
C10	0160-5962	1	CAP-FXD 15pF +-5% 50 V CER C0G	02010	08055A150JATA
C11	0160-6100	1	CAP-FXD 1000pF +-5% 50 V CER C0G	02010	12065A102JATA
C12	0180-4228	1	CAP-FXD 47uF +-20% 10 V TA	02010	TAJD476M010
C13	0160-6734	1	CAP-FXD 0.047uF +-10% 50 V CER X7R	02010	12065C473KATA
C14	0160-5963	1	CAP-FXD 18pF +-5% 50 V CER C0G	02010	08055A180JATA
C15	0160-5968	1	CAP-FXD 82pF +-5% 50 V CER C0G	02010	08051A820JATA
C16	0160-5963	1	CAP-FXD 18pF +-5% 50 V CER C0G	02010	08055A180JATA
C17	0160-5968	1	CAP-FXD 82pF +-5% 50 V CER C0G	02010	08051A820JATA
C18	0160-7385	1	CAP-FXD 130pF +-5% 50 V CER C0G	06352	C2012C0G1H131JT
C19	0160-7390	1	CAP-FXD 360pF +-5% 50 V CER C0G	06352	C2012C0G1H361JT
C20	0160-6734	1	CAP-FXD 0.047uF +-10% 50 V CER X7R	02010	12065C473KATA
C21	0160-6734	1	CAP-FXD 0.047uF +-10% 50 V CER X7R	02010	12065C473KATA
C22	0160-6734	1	CAP-FXD 0.047uF +-10% 50 V CER X7R	02010	12065C473KATA
C23	0160-6734	1	CAP-FXD 0.047uF +-10% 50 V CER X7R	02010	12065C473KATA
C24	0160-6734	1	CAP-FXD 0.047uF +-10% 50 V CER X7R	02010	12065C473KATA
C25	0160-6734	1	CAP-FXD 0.047uF +-10% 50 V CER X7R	02010	12065C473KATA
C26	0160-6734	1	CAP-FXD 0.047uF +-10% 50 V CER X7R	02010	12065C473KATA
C27	0160-6734	1	CAP-FXD 0.047uF +-10% 50 V CER X7R	02010	12065C473KATA
C28	0160-6734	1	CAP-FXD 0.047uF +-10% 50 V CER X7R	02010	12065C473KATA

**Indicates factory-selected value*

Agilent Part Number E7401-60003
Quasi Peak Detector

Reference Designator	Agilent Part Number	Qty	Description	Mgr Code	Mfr Part Number
C29	0160-6734	1	CAP-FXD 0.047uF +-10% 50 V CER X7R	02010	12065C473KATA
C30	0160-5962	1	CAP-FXD 15pF +-5% 50 V CER C0G	02010	08055A150JATA
C31	0160-7516	1	CAP-FXD 330pF +-5% 50 V CER C0G	06352	C1608COG1H331J
C36	0160-7798	1	CAP-FXD 0.1uF +-10% 50 V CER X7R	06352	C2012X7R1H104K
C37	0160-7798	1	CAP-FXD 0.1uF +-10% 50 V CER X7R	06352	C2012X7R1H104K
C38	0160-7798	1	CAP-FXD 0.1uF +-10% 50 V CER X7R	06352	C2012X7R1H104K
C39	0180-4228	1	CAP-FXD 47uF +-20% 10 V TA	02010	TAJD476M010
C40	0160-6734	1	CAP-FXD 0.047uF +-10% 50 V CER X7R	02010	12065C473KATA
C41	0160-6099	1	CAP-FXD 820pF +-5% 50 V CER C0G	02010	12065A821JATA
C42	0160-6734	1	CAP-FXD 0.047uF +-10% 50 V CER X7R	02010	12065C473KATA
C43	0160-6734	1	CAP-FXD 0.047uF +-10% 50 V CER X7R	02010	12065C473KATA
C44	0160-6734	1	CAP-FXD 0.047uF +-10% 50 V CER X7R	02010	12065C473KATA
C45	0160-6734	1	CAP-FXD 0.047uF +-10% 50 V CER X7R	02010	12065C473KATA
C46	0160-5953	1	CAP-FXD 270pF +-5% 50 V CER C0G	02010	08055C271JATA
C47	0160-6734	1	CAP-FXD 0.047uF +-10% 50 V CER X7R	02010	12065C473KATA
C49	0160-6734	1	CAP-FXD 0.047uF +-10% 50 V CER X7R	02010	12065C473KATA
C50	0160-6734	1	CAP-FXD 0.047uF +-10% 50 V CER X7R	02010	12065C473KATA
C51	0160-6734	1	CAP-FXD 0.047uF +-10% 50 V CER X7R	02010	12065C473KATA
C52	0160-7382	1	CAP-FXD 91pF +-5% 50 V CER C0G	06352	C2012C0G1H910JT
C53	0160-5959	1	CAP-FXD 33pF +-5% 50 V CER C0G	02010	08055A330JATA
C54	0160-6734	1	CAP-FXD 0.047uF +-10% 50 V CER X7R	02010	12065C473KATA
C55	0160-6734	1	CAP-FXD 0.047uF +-10% 50 V CER X7R	02010	12065C473KATA
C56	0160-6734	1	CAP-FXD 0.047uF +-10% 50 V CER X7R	02010	12065C473KATA
C60	0160-6734	1	CAP-FXD 0.047uF +-10% 50 V CER X7R	02010	12065C473KATA
C61	0160-6734	1	CAP-FXD 0.047uF +-10% 50 V CER X7R	02010	12065C473KATA
C65	0160-7798	1	CAP-FXD 0.1uF +-10% 50 V CER X7R	06352	C2012X7R1H104K
C66	0160-7798	1	CAP-FXD 0.1uF +-10% 50 V CER X7R	06352	C2012X7R1H104K
C67	0160-7798	1	CAP-FXD 0.1uF +-10% 50 V CER X7R	06352	C2012X7R1H104K
C68	0160-7798	1	CAP-FXD 0.1uF +-10% 50 V CER X7R	06352	C2012X7R1H104K
C69	0160-7798	1	CAP-FXD 0.1uF +-10% 50 V CER X7R	06352	C2012X7R1H104K

 **Indicates factory-selected value*

Agilent Part Number E7401-60003
Quasi Peak Detector

Reference Designator	Agilent Part Number	Qty	Description	Mgr Code	Mfr Part Number
C70	0160-7798	1	CAP-FXD 0.1uF +-10% 50 V CER X7R	06352	C2012X7R1H104K
C71	0160-7798	1	CAP-FXD 0.1uF +-10% 50 V CER X7R	06352	C2012X7R1H104K
C72	0160-7798	1	CAP-FXD 0.1uF +-10% 50 V CER X7R	06352	C2012X7R1H104K
C73	0160-7798	1	CAP-FXD 0.1uF +-10% 50 V CER X7R	06352	C2012X7R1H104K
C74	0160-7798	1	CAP-FXD 0.1uF +-10% 50 V CER X7R	06352	C2012X7R1H104K
C75	0160-7798	1	CAP-FXD 0.1uF +-10% 50 V CER X7R	06352	C2012X7R1H104K
C76	0160-7798	1	CAP-FXD 0.1uF +-10% 50 V CER X7R	06352	C2012X7R1H104K
C77	0160-7798	1	CAP-FXD 0.1uF +-10% 50 V CER X7R	06352	C2012X7R1H104K
C78	0180-3755	1	CAP-FXD 33uF +-20% 10 V TA	02010	TAJD336M010
C79	0160-7798	1	CAP-FXD 0.1uF +-10% 50 V CER X7R	06352	C2012X7R1H104K
C80	0160-7798	1	CAP-FXD 0.1uF +-10% 50 V CER X7R	06352	C2012X7R1H104K
C81	0160-7798	1	CAP-FXD 0.1uF +-10% 50 V CER X7R	06352	C2012X7R1H104K
C82	0160-7798	1	CAP-FXD 0.1uF +-10% 50 V CER X7R	06352	C2012X7R1H104K
C85	0160-7798	1	CAP-FXD 0.1uF +-10% 50 V CER X7R	06352	C2012X7R1H104K
C86	0160-7798	1	CAP-FXD 0.1uF +-10% 50 V CER X7R	06352	C2012X7R1H104K
C87	0180-4287	1	CAP-FXD 10uF +-20% 35 V TA	02010	TAJD106M035
C88	0160-7798	1	CAP-FXD 0.1uF +-10% 50 V CER X7R	06352	C2012X7R1H104K
C89	0160-7798	1	CAP-FXD 0.1uF +-10% 50 V CER X7R	06352	C2012X7R1H104K
C90	0180-4287	1	CAP-FXD 10uF +-20% 35 V TA	02010	TAJD106M035
C91	0160-7798	1	CAP-FXD 0.1uF +-10% 50 V CER X7R	06352	C2012X7R1H104K
C92	0160-7798	1	CAP-FXD 0.1uF +-10% 50 V CER X7R	06352	C2012X7R1H104K
C93	0160-7798	1	CAP-FXD 0.1uF +-10% 50 V CER X7R	06352	C2012X7R1H104K
C94	0160-7798	1	CAP-FXD 0.1uF +-10% 50 V CER X7R	06352	C2012X7R1H104K
C95	0180-3749	1	CAP-FXD 0.22uF +-20% 35 V TA	00039	NRA224M35R8
C96	0160-7798	1	CAP-FXD 0.1uF +-10% 50 V CER X7R	06352	C2012X7R1H104K
C97	0160-7798	1	CAP-FXD 0.1uF +-10% 50 V CER X7R	06352	C2012X7R1H104K
C98	0180-3749	1	CAP-FXD 0.22uF +-20% 35 V TA	00039	NRA224M35R8
C99	0160-7798	1	CAP-FXD 0.1uF +-10% 50 V CER X7R	06352	C2012X7R1H104K
C105	0160-6734	1	CAP-FXD 0.047uF +-10% 50 V CER X7R	02010	12065C473KATA
C106	0160-6734	1	CAP-FXD 0.047uF +-10% 50 V CER X7R	02010	12065C473KATA

**Indicates factory-selected value*

Agilent Part Number E7401-60003
Quasi Peak Detector

Reference Designator	Agilent Part Number	Qty	Description	Mgr Code	Mfr Part Number
C107	0160-5967	1	CAP-FXD 100pF +-5% 50 V CER C0G	06352	C2012COG1H101J
C108	0160-6734	1	CAP-FXD 0.047uF +-10% 50 V CER X7R	02010	12065C473KATA
C109	0160-6734	1	CAP-FXD 0.047uF +-10% 50 V CER X7R	02010	12065C473KATA
C110	0160-6734	1	CAP-FXD 0.047uF +-10% 50 V CER X7R	02010	12065C473KATA
C111	0180-3753	1	CAP-FXD 6.8uF +-20% 35 V TA	00039	NRD685M35R12
C112	0180-4116	1	CAP-FXD 22uF +-20% 20 V TA	02010	TAJD226M020
C116	0180-3753	1	CAP-FXD 6.8uF +-20% 35 V TA	00039	NRD685M35R12
C117	0180-3753	1	CAP-FXD 6.8uF +-20% 35 V TA	00039	NRD685M35R12
C118	0180-3753	1	CAP-FXD 6.8uF +-20% 35 V TA	00039	NRD685M35R12
C120	0160-7798	1	CAP-FXD 0.1uF +-10% 50 V CER X7R	06352	C2012X7R1H104K
C121	0160-7751	1	CAP-FXD 0.01uF +-10% 50 V CER X7R	02010	06035C103KAT
C125	0160-7516	1	CAP-FXD 330pF +-5% 50 V CER C0G	06352	C1608COG1H331J
C126	0160-7516	1	CAP-FXD 330pF +-5% 50 V CER C0G	06352	C1608COG1H331J
C127	0160-7516	1	CAP-FXD 330pF +-5% 50 V CER C0G	06352	C1608COG1H331J
C128	0160-7516	1	CAP-FXD 330pF +-5% 50 V CER C0G	06352	C1608COG1H331J
C129	0160-7516	1	CAP-FXD 330pF +-5% 50 V CER C0G	06352	C1608COG1H331J
C130	0160-7516	1	CAP-FXD 330pF +-5% 50 V CER C0G	06352	C1608COG1H331J
C131	0160-7516	1	CAP-FXD 330pF +-5% 50 V CER C0G	06352	C1608COG1H331J
C132	0160-7516	1	CAP-FXD 330pF +-5% 50 V CER C0G	06352	C1608COG1H331J
C133	0160-7798	1	CAP-FXD 0.1uF +-10% 50 V CER X7R	06352	C2012X7R1H104K
C134	0160-7798	1	CAP-FXD 0.1uF +-10% 50 V CER X7R	06352	C2012X7R1H104K
C150	0160-7798	1	CAP-FXD 0.1uF +-10% 50 V CER X7R	06352	C2012X7R1H104K
C151	0160-7798	1	CAP-FXD 0.1uF +-10% 50 V CER X7R	06352	C2012X7R1H104K
C152	0160-7798	1	CAP-FXD 0.1uF +-10% 50 V CER X7R	06352	C2012X7R1H104K
C153	0160-7798	1	CAP-FXD 0.1uF +-10% 50 V CER X7R	06352	C2012X7R1H104K
C170	0160-7798	1	CAP-FXD 0.1uF +-10% 50 V CER X7R	06352	C2012X7R1H104K
C171	0160-7798	1	CAP-FXD 0.1uF +-10% 50 V CER X7R	06352	C2012X7R1H104K
C172	0180-4287	1	CAP-FXD 10uF +-20% 35 V TA	02010	TAJD106M035
C173	0160-7798	1	CAP-FXD 0.1uF +-10% 50 V CER X7R	06352	C2012X7R1H104K
C174	0160-7798	1	CAP-FXD 0.1uF +-10% 50 V CER X7R	06352	C2012X7R1H104K

 **Indicates factory-selected value*

Agilent Part Number E7401-60003
Quasi Peak Detector

Reference Designator	Agilent Part Number	Qty	Description	Mgr Code	Mfr Part Number
C175	0180-4287	1	CAP-FXD 10uF +-20% 35 V TA	02010	TAJD106M035
C200	0180-3753	1	CAP-FXD 6.8uF +-20% 35 V TA	00039	NRD685M35R12
C201	0180-3753	1	CAP-FXD 6.8uF +-20% 35 V TA	00039	NRD685M35R12
C202	0180-3753	1	CAP-FXD 6.8uF +-20% 35 V TA	00039	NRD685M35R12
CR1	1901-1227	1	DIODE-SWITCHING 75V 200MA 6NS TO-236	02910	BAS16
CR2	1901-1227	1	DIODE-SWITCHING 75V 200MA 6NS TO-236	02910	BAS16
CR3	1901-1227	1	DIODE-SWITCHING 75V 200MA 6NS TO-236	02910	BAS16
CR4	1906-0334	1	DIODE-DUAL 200V 200MA T0-236AA	02237	MMBD1503
CR5	1901-1227	1	DIODE-SWITCHING 75V 200MA 6NS TO-236	02910	BAS16
E1	9170-1421	1	CORE-SHIELDING BEAD	06352	HF50ACB-322513
FL1	9135-0461	1	FILTER-SUPPRESSION EMI; SMT; WORKING	09939	NFM61R10T102M0 0-621
J1	1252-5906	1	CONN-RECT MICRORBN 100-CKT 100-CONT	01380	2-557101-5
J2	1252-5906	1	CONN-RECT MICRORBN 100-CKT 100-CONT	01380	2-557101-5
J3	1253-0531	1	CONN-RECT D-SUBMIN 9-CKT 9-CONT	03746	842900-9
L1	9100-1640	1	INDUCTOR RF-CH-MLD 160uH +-5%	05826	1537-86
L2	9100-1640	1	INDUCTOR RF-CH-MLD 160uH +-5%	05826	1537-86
L3	9140-0237	1	INDUCTOR RF-CH-MLD 200uH +-5%	05826	1537-90
L4	9140-1110	1	INDUCTOR 5.6uH +-5% 3.4W-mmX4.8LG-mm	28480	9140-1110
L5	9140-1110	1	INDUCTOR 5.6uH +-5% 3.4W-mmX4.8LG-mm	28480	9140-1110
L6	9140-1121	1	INDUCTOR 100uH +-5% 3.4W-mmX4.8LG-mm	06352	NL453232T-101J
L7	9140-1122	1	INDUCTOR 150uH +-5% 3.4W-mmX4.8LG-mm	28480	9140-1122
L8	85650-80004	1	INDUCTOR 8.25 MH	28480	85650-80004
L9	9100-1655	1	INDUCTOR RF-CH-MLD 1.2mH +-5%	05524	IM-8 1200UH 5%
L11	9140-1736	1	INDUCTOR 47uH +20% -20% 7.3W-mmX7.3LG-mm	06353	E636CY-470M-P3
L12	9140-1736	1	INDUCTOR 47uH +20% -20% 7.3W-mmX7.3LG-mm	06353	E636CY-470M-P3
L13	9140-1736	1	INDUCTOR 47uH +20% -20% 7.3W-mmX7.3LG-mm	06353	E636CY-470M-P3
L14	9140-1736	1	INDUCTOR 47uH +20% -20% 7.3W-mmX7.3LG-mm	06353	E636CY-470M-P3

**Indicates factory-selected value*

Agilent Part Number E7401-60003
Quasi Peak Detector

Reference Designator	Agilent Part Number	Qty	Description	Mgr Code	Mfr Part Number
L15	9140-1736	1	INDUCTOR 47uH +20% -20% 7.3W-mmX7.3LG-mm	06353	E636CY-470M-P3
MP2	7100-1317	1	CAN-SQ	01932	HU 4532-.437 + TABS
MP3	7100-1316	1	CAN-SQ	01932	HU 4280-.437 + TABS
MP4	5040-6843	1	EXTRACTOR RING	28480	5040-6843
MP5	5000-9043	1	EXTR PIN .062 BD	28480	5000-9043
MP6	E7401-00001	1	BRACKET-QPD	28480	E7401-00001
MP7	8160-0513	1	RFI GASKET .6-IN-WD .03-IN-THK	03746	572019-00100-70
MP8	1251-2942	1	SCREW LOCK KIT-SUBMIN D CONN	02121	ST9422-36
MP9	1251-2942	1	SCREW LOCK KIT-SUBMIN D CONN	02121	ST9422-36
MP10	0515-1934	1	SCREW-MACHINE ASSEMBLY M2.5 X 0.45	05610	0515-1934
MP11	0515-1934	1	SCREW-MACHINE ASSEMBLY M2.5 X 0.45	05610	0515-1934
Q1	1854-1037	1	TRANSISTOR NPN SI TO-236AA PD350MW	00746	SST3904T116
Q3	1855-0680	1	TRANSISTOR J-FET N-CHAN D-MODE SOT-23	36633	MMBF4391LT1
Q4	1853-0567	1	TRANSISTOR PNP SI SOT-23 (TO-236AB)	00746	SST3906T116
Q101	1855-0734	1	TRANSISTOR MOSFET 2N7002 N-CHAN E-MODE	02910	2N7002
Q102	1855-0734	1	TRANSISTOR MOSFET 2N7002 N-CHAN E-MODE	02910	2N7002
Q103	1855-0734	1	TRANSISTOR MOSFET 2N7002 N-CHAN E-MODE	02910	2N7002
Q105	1855-0734	1	TRANSISTOR MOSFET 2N7002 N-CHAN E-MODE	02910	2N7002
Q106	1855-0734	1	TRANSISTOR MOSFET 2N7002 N-CHAN E-MODE	02910	2N7002
R1	0699-1385	1	RESISTOR 5.11K +-1% .125W TKF TC0+-100	05524	CRCW12065111F
R2	0699-1379	1	RESISTOR 2.87K +-1% .125W TKF TC0+-100	00746	MCR18-F-2871
R3	0699-1318	1	RESISTOR 1K +-1% .125W TKF TC0+-100	00746	MCR18-F-1001
R4	0699-1904	1	RESISTOR 1.62K +-1% .125W TKF TC0+-100	05524	CRCW12061621F
R6	0699-1904	1	RESISTOR 1.62K +-1% .125W TKF TC0+-100	05524	CRCW12061621F

 **Indicates factory-selected value*

Agilent Part Number E7401-60003
Quasi Peak Detector

Reference Designator	Agilent Part Number	Qty	Description	Mgr Code	Mfr Part Number
R7	0699-1318	1	RESISTOR 1K +-1% .125W TKF TC0+-100	00746	MCR18-F-1001
R8	0699-1360	1	RESISTOR 46.4 +-1% .125W TKF TC0+-100	05524	CRCW120646R4F
R9	0699-2846	1	RESISTOR 5K +-0.1% .125W TF TC0+-25	02499	W1206R035001BT
R10	0699-1318	1	RESISTOR 1K +-1% .125W TKF TC0+-100	00746	MCR18-F-1001
R11	0699-1318	1	RESISTOR 1K +-1% .125W TKF TC0+-100	00746	MCR18-F-1001
R12	0699-2889	1	RESISTOR 4.7 +-5% .125W TKF TC0+-500	00746	MCR18-J-4R7
R13	0699-2846	1	RESISTOR 5K +-0.1% .125W TF TC0+-25	02499	W1206R035001BT
R14	0699-2489	1	RESISTOR 10K +-0.1% .125W TF TC0+-25	01172	BLU-1206 10K .1% 25PPM
R15	0699-1427	1	RESISTOR 316 +-1% .125W TKF TC0+-100	09891	RK73H2BT3160F
R16	0699-1427	1	RESISTOR 316 +-1% .125W TKF TC0+-100	09891	RK73H2BT3160F
R17	0699-2827	1	RESISTOR 900 +-0.1% .125W TF TC0+-25	02499	W1206R039000BT
R18	0699-2490	1	RESISTOR 1K +-0.1% .125W TF TC0+-25	01172	BLU-1206 1K .1% 25PPM
R19	0699-2848	1	RESISTOR 18K +-0.1% .125W TF TC0+-25	01172	BLU-1206 18K .1% 25PPM
R20	0699-2840	1	RESISTOR 2.5K +-0.1% .125W TF TC0+-25	02499	W1206R032501BT
R21	0699-2840	1	RESISTOR 2.5K +-0.1% .125W TF TC0+-25	02499	W1206R032501BT
R22	0699-2840	1	RESISTOR 2.5K +-0.1% .125W TF TC0+-25	02499	W1206R032501BT
R23	0699-2489	1	RESISTOR 10K +-0.1% .125W TF TC0+-25	01172	BLU-1206 10K .1% 25PPM
R24	0699-1366	1	RESISTOR 82.5 +-1% .125W TKF TC0+-100	05524	CRCW120682R5F
R25	0699-1400	1	RESISTOR 26.1K +-1% .125W TKF TC0+-100	05524	CRCW12062612F
R26	0699-1344	1	RESISTOR 10 +-1% .125W TKF TC0+-100	09891	RK73H2BT10R0F
R27	0699-2489	1	RESISTOR 10K +-0.1% .125W TF TC0+-25	01172	BLU-1206 10K .1% 25PPM
R28	0699-1400	1	RESISTOR 26.1K +-1% .125W TKF TC0+-100	05524	CRCW12062612F
R29	0699-2840	1	RESISTOR 2.5K +-0.1% .125W TF TC0+-25	02499	W1206R032501BT
R30	0699-1432	1	RESISTOR 511 +-1% .125W TKF TC0+-100	00746	MCR18-F-5110
R31	0699-1379	1	RESISTOR 2.87K +-1% .125W TKF TC0+-100	00746	MCR18-F-2871
R32	0699-0073	1	RESISTOR 10M +-1% .125W TF TC0+-100	05524	CMF-551005FT-1
R33	0699-1327	1	RESISTOR 1M +-1% .125W TKF TC0+-100	09891	RK73H2BT1004F

**Indicates factory-selected value*

Agilent Part Number E7401-60003
Quasi Peak Detector

Reference Designator	Agilent Part Number	Qty	Description	Mgr Code	Mfr Part Number
R34	0699-1330	1	RESISTOR 100K +-1% .125W TKF TC0+-100	00746	MCR18-F-1003
R35	0699-1400	1	RESISTOR 26.1K +-1% .125W TKF TC0+-100	05524	CRCW12062612F
R36	0699-3931	1	RESISTOR 196 +-1% .063W TKF TC0+-200	09891	RK73H1J1960F
R37	0699-3947	1	RESISTOR 1K +-1% .063W TKF TC0+-200	00746	MCR03-F-1001
R38	0699-1440	1	RESISTOR 121K +-1% .125W TKF TC0+-100	05524	CRCW12061213F
R39	0699-1443	1	RESISTOR 147K +-1% .125W TKF TC0+-100	09891	RK73H2BT1473F
R40	0699-1460	1	RESISTOR 825K +-1% .125W TKF TC0+-100	09891	RK73H2BT8253F
R41	0699-2847	1	RESISTOR 2K +-0.1% .125W TF TC0+-25	01172	BLU-1206 2K .1% 25PPM
R42	0699-2483	1	RESISTOR 4K +-0.1% .125W TF TC0+-25	02499	W1206R034001BT
R43	0699-1330	1	RESISTOR 100K +-1% .125W TKF TC0+-100	00746	MCR18-F-1003
R45	0699-1391	1	RESISTOR 10K +-1% .125W TKF TC0+-100	05524	CRCW12061002F
R46	0699-1391	1	RESISTOR 10K +-1% .125W TKF TC0+-100	05524	CRCW12061002F
R47	0699-1503	1	RESISTOR 0 CWM	05524	CRCW1206000
R48	0699-1391	1	RESISTOR 10K +-1% .125W TKF TC0+-100	05524	CRCW12061002F
R49	0699-1385	1	RESISTOR 5.11K +-1% .125W TKF TC0+-100	05524	CRCW12065111F
R50	0699-1318	1	RESISTOR 1K +-1% .125W TKF TC0+-100	00746	MCR18-F-1001
R51	0699-1318	1	RESISTOR 1K +-1% .125W TKF TC0+-100	00746	MCR18-F-1001
R52	0699-1318	1	RESISTOR 1K +-1% .125W TKF TC0+-100	00746	MCR18-F-1001
R53	0699-1385	1	RESISTOR 5.11K +-1% .125W TKF TC0+-100	05524	CRCW12065111F
R54	0699-1318	1	RESISTOR 1K +-1% .125W TKF TC0+-100	00746	MCR18-F-1001
R55	0699-1448	1	RESISTOR 316K +-1% .125W TKF TC0+-100	05524	CRCW12063163F
R56	0699-2837	1	RESISTOR 30K +-0.1% .125W TF TC0+-25	02499	W1206R033002BT
R57	0699-2491	1	RESISTOR 20K +-0.1% .125W TF TC0+-25	02499	W1206R032002BT
R58	0699-2834	1	RESISTOR 400 +-0.1% .125W TF TC0+-25	02499	W1206R034000BT
R59	0699-1391	1	RESISTOR 10K +-1% .125W TKF TC0+-100	05524	CRCW12061002F
R60	0699-1410	1	RESISTOR 61.9K +-1% .125W TKF TC0+-100	05524	CRCW12066192F
R61	0699-1448	1	RESISTOR 316K +-1% .125W TKF TC0+-100	05524	CRCW12063163F
R62	0699-2491	1	RESISTOR 20K +-0.1% .125W TF TC0+-25	02499	W1206R032002BT

 **Indicates factory-selected value*

Agilent Part Number E7401-60003
Quasi Peak Detector

Reference Designator	Agilent Part Number	Qty	Description	Mgr Code	Mfr Part Number
R63	0699-2838	1	RESISTOR 40K +-0.1% .125W TF TC0+-25	01172	BLU-1206 40K .1% 25PPM
R64	0699-2834	1	RESISTOR 400 +-0.1% .125W TF TC0+-25	02499	W1206R034000BT
R65	0699-2847	1	RESISTOR 2K +-0.1% .125W TF TC0+-25	01172	BLU-1206 2K .1% 25PPM
R66	0699-2823	1	RESISTOR 8K +-0.1% .125W TF TC0+-25	02499	W1206R038001BT
R67	0699-2827	1	RESISTOR 900 +-0.1% .125W TF TC0+-25	02499	W1206R039000BT
R69	0699-1391	1	RESISTOR 10K +-1% .125W TKF TC0+-100	05524	CRCW12061002F
R70	0699-1327	1	RESISTOR 1M +-1% .125W TKF TC0+-100	09891	RK73H2BT1004F
R71	0699-1391	1	RESISTOR 10K +-1% .125W TKF TC0+-100	05524	CRCW12061002F
R72	1810-1360	1	NET-RES 8 10.0K OHM 16-PIN	05524	SOMC-1603-103G
R75	0699-3947	1	RESISTOR 1K +-1% .063W TKF TC0+-200	00746	MCR03-F-1001
R76	0699-3947	1	RESISTOR 1K +-1% .063W TKF TC0+-200	00746	MCR03-F-1001
R77	0699-3970	1	RESISTOR 10K +-1% .063W TKF TC0+-200	09891	RK73H1J1002F
R78	0699-3970	1	RESISTOR 10K +-1% .063W TKF TC0+-200	09891	RK73H1J1002F
R79	0699-3978	1	RESISTOR 21.5K +-1% .063W TKF TC0+-200	09891	RK73H1J2152F
R81	0699-3947	1	RESISTOR 1K +-1% .063W TKF TC0+-200	00746	MCR03-F-1001
R82	0699-3947	1	RESISTOR 1K +-1% .063W TKF TC0+-200	00746	MCR03-F-1001
R83	0699-3947	1	RESISTOR 1K +-1% .063W TKF TC0+-200	00746	MCR03-F-1001
R84	0699-3947	1	RESISTOR 1K +-1% .063W TKF TC0+-200	00746	MCR03-F-1001
R85	1810-1940	1	NET-RES 4 220.0 OHM 8-PIN	00746	MNR34J221
R86	1810-1940	1	NET-RES 4 220.0 OHM 8-PIN	00746	MNR34J221
R87	1810-1940	1	NET-RES 4 220.0 OHM 8-PIN	00746	MNR34J221
R88	1810-1360	1	NET-RES 8 10.0K OHM 16-PIN	05524	SOMC-1603-103G
R89	1810-1581	1	NET-RES 4 33.0 OHM 8-PIN	00746	MNR34K5AWJ330
R90	1810-1581	1	NET-RES 4 33.0 OHM 8-PIN	00746	MNR34K5AWJ330
R91	0699-3933	1	RESISTOR 237 +-1% .063W TKF TC0+-200	00746	MCR03-F-2370
R92	0699-1376	1	RESISTOR 2.15K +-1% .125W TKF TC0+-100	09891	RK73H2BT2151F
R93	0699-1503	1	RESISTOR 0 CWM	05524	CRCW1206000
R94	1810-1360	1	NET-RES 8 10.0K OHM 16-PIN	05524	SOMC-1603-103G

Agilent Part Number E7401-60003
Quasi Peak Detector

Reference Designator	Agilent Part Number	Qty	Description	Mgr Code	Mfr Part Number
R96	0699-1327	1	RESISTOR 1M +-1% .125W TKF TC0+-100	09891	RK73H2BT1004F
R97	0699-1391	1	RESISTOR 10K +-1% .125W TKF TC0+-100	05524	CRCW12061002F
R98	0699-3970	1	RESISTOR 10K +-1% .063W TKF TC0+-200	09891	RK73H1J1002F
R99	0699-1356	1	RESISTOR 31.6 +-1% .25W TKF TC0+-100	09891	RK73H2BT31R6F
R100	0699-1375	1	RESISTOR 1.96K +-1% .125W TKF TC0+-100	09891	RK73H2BT1961F
R101	0699-2840	1	RESISTOR 2.5K +-0.1% .125W TF TC0+-25	02499	W1206R032501BT
R102	0699-1365	1	RESISTOR 75 +-1% .125W TKF TC0+-100	05524	CRCW120675R0F
R103	0699-1398	1	RESISTOR 21.5K +-1% .125W TKF TC0+-100	05524	CRCW12062152F
R104	0699-1904	1	RESISTOR 1.62K +-1% .125W TKF TC0+-100	05524	CRCW12061621F
R105	0699-1406	1	RESISTOR 42.2K +-1% .125W TKF TC0+-100	00746	MCR18-F-4222
R106	0699-1382	1	RESISTOR 3.83K +-1% .125W TKF TC0+-100	05524	CRCW12063831F
R107	0699-1453	1	RESISTOR 464K +-1% .125W TKF TC0+-100	00746	MCR18-F-4643
R108	0699-1398	1	RESISTOR 21.5K +-1% .125W TKF TC0+-100	05524	CRCW12062152F
R109	0699-1408	1	RESISTOR 51.1K +-1% .125W TKF TC0+-100	05524	CRCW12065112F
R110	0699-1367	1	RESISTOR 90.9 +-1% .125W TKF TC0+-100	05524	CRCW120690R9F
R112	0699-2846	1	RESISTOR 5K +-0.1% .125W TF TC0+-25	02499	W1206R035001BT
R113	0699-1437	1	RESISTOR 825 +-1% .125W TKF TC0+-100	00746	MCR18-F-8250
R114	0699-2488	1	RESISTOR 100 +-0.1% .125W TF TC0+-25	09891	RN73E2BTE1000B
R115	0699-1369	1	RESISTOR 1.1K +-1% .125W TKF TC0+-100	05524	CRCW12061101F
R116	0699-2489	1	RESISTOR 10K +-0.1% .125W TF TC0+-25	01172	BLU-1206 10K .1% 25PPM
R117	0699-1387	1	RESISTOR 6.81K +-1% .125W TKF TC0+-100	05524	CRCW12066811F
R118	0699-1319	1	RESISTOR 12.1K +-1% .125W TKF TC0+-100	09891	RK73H2BT1212F
R119	0699-1405	1	RESISTOR 38.3K +-1% .125W TKF TC0+-100	05524	CRCW12063832F
R120	0699-1412	1	RESISTOR 75K +-1% .125W TKF TC0+-100	00746	MCR18-F-7502
R122	0699-1362	1	RESISTOR 56.2 +-1% .125W TKF TC0+-100	00746	MCR18-F-56R2
R123	0699-1391	1	RESISTOR 10K +-1% .125W TKF TC0+-100	05524	CRCW12061002F
R124	0699-3935	1	RESISTOR 287 +-1% .063W TKF TC0+-200	00746	MCR03-F-2870
R125	0699-3956	1	RESISTOR 2.37K +-1% .063W TKF TC0+-200	09891	RK73H1J2371F
R127	0699-3932	1	RESISTOR 215 +-1% .063W TKF TC0+-200	00746	MCR03-F-2150

 **Indicates factory-selected value*

Agilent Part Number E7401-60003
Quasi Peak Detector

Reference Designator	Agilent Part Number	Qty	Description	Mgr Code	Mfr Part Number
R128	0699-3913	1	RESISTOR 31.6 +-1% .063W TKF TC0+-200	09891	RK73H1J31R6F
R129	0699-1391	1	RESISTOR 10K +-1% .125W TKF TC0+-100	05524	CRCW12061002F
R130	0699-1412	1	RESISTOR 75K +-1% .125W TKF TC0+-100	00746	MCR18-F-7502
R131	0699-1386	1	RESISTOR 5.62K +-1% .125W TKF TC0+-100	09891	RK73H2BT5621F
R132	0699-1785	1	RESISTOR 13.3K +-1% .125W TKF TC0+-100	05524	CRCW12061332F
R133	0699-1428	1	RESISTOR 348 +-1% .125W TKF TC0+-100	05524	CRCW12063480F
R134	0699-1441	1	RESISTOR 133K +-1% .125W TKF TC0+-100	00746	MCR18-F-1333
R135	0699-1398	1	RESISTOR 21.5K +-1% .125W TKF TC0+-100	05524	CRCW12062152F
R136	0699-1374	1	RESISTOR 1.78K +-1% .125W TKF TC0+-100	09891	RK73H2BT1781F
R137	0699-1396	1	RESISTOR 17.8K +-1% .125W TKF TC0+-100	05524	CRCW12061782F
R138	0699-1435	1	RESISTOR 681 +-1% .125W TKF TC0+-100	09891	RK73H2BT6810F
R139	0699-1394	1	RESISTOR 14.7K +-1% .125W TKF TC0+-100	09891	RK73H2BT1472F
R140	0699-1344	1	RESISTOR 10 +-1% .125W TKF TC0+-100	09891	RK73H2BT10R0F
R141	0699-1344	1	RESISTOR 10 +-1% .125W TKF TC0+-100	09891	RK73H2BT10R0F
R142	0699-1362	1	RESISTOR 56.2 +-1% .125W TKF TC0+-100	00746	MCR18-F-56R2
R143	0699-1391	1	RESISTOR 10K +-1% .125W TKF TC0+-100	05524	CRCW12061002F
R144	0699-1369	1	RESISTOR 1.1K +-1% .125W TKF TC0+-100	05524	CRCW12061101F
R145	0699-2489	1	RESISTOR 10K +-0.1% .125W TF TC0+-25	01172	BLU-1206 10K .1% 25PPM
R147	0699-1391	1	RESISTOR 10K +-1% .125W TKF TC0+-100	05524	CRCW12061002F
R148	0699-1415	1	RESISTOR 100 +-1% .125W TKF TC0+-100	05524	CRCW12061000F
R149	0699-1344	1	RESISTOR 10 +-1% .125W TKF TC0+-100	09891	RK73H2BT10R0F
R150	0699-1344	1	RESISTOR 10 +-1% .125W TKF TC0+-100	09891	RK73H2BT10R0F
R160	1810-1581	1	NET-RES 4 33.0 OHM 8-PIN	00746	MNR34K5AWJ330
R161	1810-1581	1	NET-RES 4 33.0 OHM 8-PIN	00746	MNR34K5AWJ330
R162	1810-1581	1	NET-RES 4 33.0 OHM 8-PIN	00746	MNR34K5AWJ330
R163	1810-1581	1	NET-RES 4 33.0 OHM 8-PIN	00746	MNR34K5AWJ330
R164	1810-1581	1	NET-RES 4 33.0 OHM 8-PIN	00746	MNR34K5AWJ330
R165	1810-1581	1	NET-RES 4 33.0 OHM 8-PIN	00746	MNR34K5AWJ330
R166	1810-1581	1	NET-RES 4 33.0 OHM 8-PIN	00746	MNR34K5AWJ330

Agilent Part Number E7401-60003
Quasi Peak Detector

Reference Designator	Agilent Part Number	Qty	Description	Mgr Code	Mfr Part Number
R167	1810-1581	1	NET-RES 4 33.0 OHM 8-PIN	00746	MNR34K5AWJ330
TP1	1460-2594	1	CONNECTOR-SGL CONT SPR .01-IN-BSC-SZ REC	12965	TP-108
TP2	1460-2594	1	CONNECTOR-SGL CONT SPR .01-IN-BSC-SZ REC	12965	TP-108
TP3	1460-2594	1	CONNECTOR-SGL CONT SPR .01-IN-BSC-SZ REC	12965	TP-108
TP4	1460-2594	1	CONNECTOR-SGL CONT SPR .01-IN-BSC-SZ REC	12965	TP-108
TP5	1460-2594	1	CONNECTOR-SGL CONT SPR .01-IN-BSC-SZ REC	12965	TP-108
TP6	1460-2594	1	CONNECTOR-SGL CONT SPR .01-IN-BSC-SZ REC	12965	TP-108
TP7	1460-2594	1	CONNECTOR-SGL CONT SPR .01-IN-BSC-SZ REC	12965	TP-108
TP8	1460-2594	1	CONNECTOR-SGL CONT SPR .01-IN-BSC-SZ REC	12965	TP-108
TP9	1460-2594	1	CONNECTOR-SGL CONT SPR .01-IN-BSC-SZ REC	12965	TP-108
TP10	1460-2594	1	CONNECTOR-SGL CONT SPR .01-IN-BSC-SZ REC	12965	TP-108
TP11	1460-2594	1	CONNECTOR-SGL CONT SPR .01-IN-BSC-SZ REC	12965	TP-108
TP12	1460-2594	1	CONNECTOR-SGL CONT SPR .01-IN-BSC-SZ REC	12965	TP-108
TP13	1460-2594	1	CONNECTOR-SGL CONT SPR .01-IN-BSC-SZ REC	12965	TP-108
TP14	1460-2594	1	CONNECTOR-SGL CONT SPR .01-IN-BSC-SZ REC	12965	TP-108
TP15	1460-2594	1	CONNECTOR-SGL CONT SPR .01-IN-BSC-SZ REC	12965	TP-108
TP16	1460-2594	1	CONNECTOR-SGL CONT SPR .01-IN-BSC-SZ REC	12965	TP-108
TP17	1460-2594	1	CONNECTOR-SGL CONT SPR .01-IN-BSC-SZ REC	12965	TP-108
TP18	1460-2594	1	CONNECTOR-SGL CONT SPR .01-IN-BSC-SZ REC	12965	TP-108

 **Indicates factory-selected value*

Agilent Part Number E7401-60003
Quasi Peak Detector

Reference Designator	Agilent Part Number	Qty	Description	Mgr Code	Mfr Part Number
TP19	1460-2594	1	CONNECTOR-SGL CONT SPR .01-IN-BSC-SZ REC	12965	TP-108
TP20	1460-2594	1	CONNECTOR-SGL CONT SPR .01-IN-BSC-SZ REC	12965	TP-108
TP21	1460-2594	1	CONNECTOR-SGL CONT SPR .01-IN-BSC-SZ REC	12965	TP-108
U1	1826-8519	1	IC-OP AMPAUDIO SP.FUNCT QUAD 14-PIN SOT	01698	OPA4134UA
U2	1826-1931	1	IC OSC DBL-BAL SINGLE 8 PIN PLSTC-SOIC	02910	SA602AD
U3	1826-2211	1	IC RF/IF AMPL SINGLE 8 PIN PLSTC-SOIC	28480	1826-2211
U4	1820-6391	1	IC GATE CMOS/AC EXCL-OR QUAD 2-INP	02237	74AC86SCX.
U5	1826-1838	1	IC PWR MGT-V-REF-FXD 4.95/5.05V 8 PINS	10858	LT1021DCS8-5
U6	1826-1899	1	D/A 12-BIT 28-PLCC CMOS	03285	AD7547JP
U7	1826-8519	1	IC-OP AMPAUDIO SP.FUNCT QUAD 14-PIN SOT	01698	OPA4134UA
U8	1826-8519	1	IC-OP AMPAUDIO SP.FUNCT QUAD 14-PIN SOT	01698	OPA4134UA
U9	1826-1458	1	D/A 8-DGT 16-P-SOIC	02910	DAC-08ED
U10	1826-1985	1	ANALOG SWITCH 4 SPST 16 -P-SOIC	05524	DG411DY
U12	1826-2211	1	IC RF/IF AMPL SINGLE 8 PIN PLSTC-SOIC	28480	1826-2211
U13	1826-2167	1	ANALOG MULTIPLEXER 8 CHNL 16-SOIC	05524	DG409DY
U14	1820-4692	1	IC GATE CMOS/HC NAND QUAD 2-INP	01698	SN74HC00D
U15	1820-6277	1	IC SHF-RGTR CMOS/HC SYNC/ASYNC SERIAL-IN	02237	MM74HC595M
U16	1820-6277	1	IC SHF-RGTR CMOS/HC SYNC/ASYNC SERIAL-IN	02237	MM74HC595M
U17	1813-0710	1	CLK-OSC-XTAL STD 24.0-MHZ 0.01%	12768	SG-615-24.000MC
U18	1820-5763	1	IC GATE TTL/F NOR TPL 3-INP	02910	74F27D
U19	1821-1144	1	IC-SUPER I/O; DUAL UARTs; IEEE 1284; IDE	03406	PC87332VLJ
U21	1820-7796	1	IC DRVR BICMOS/ABT LINE OCTL	02910	74ABT244D
U22	1821-0787	1	IC-INTERFACE XCVR CMOS RS-232C	10858	LT1137ACS
U23	E4401-80009	1	IO ADDRESS PAL	28480	E4401-80009
U24	1826-1826	1	IC PWR MGT-V-REG-ADJ-POS 1.2/37V 8 PINS	03406	LM317LM
U99	1820-8770	1	IC BFR CMOS/ACT NON-INV QUAD	02237	74ACT125SCX.

**Indicates factory-selected value*

Agilent Part Number E7401-60003
Quasi Peak Detector

Reference Designator	Agilent Part Number	Qty	Description	Mgr Code	Mfr Part Number
U100	E7401-80002	1	PROM PAL U100	28480	E7401-80002
U101	E7401-80003	1		28480	E7401-80003
U102	1820-6277	1	IC SHF-RGTR CMOS/HC SYNC/ASYNC SERIAL-IN	02237	MM74HC595M
U103	1820-6277	1	IC SHF-RGTR CMOS/HC SYNC/ASYNC SERIAL-IN	02237	MM74HC595M
U104	1820-6277	1	IC SHF-RGTR CMOS/HC SYNC/ASYNC SERIAL-IN	02237	MM74HC595M
U105	1820-6277	1	IC SHF-RGTR CMOS/HC SYNC/ASYNC SERIAL-IN	02237	MM74HC595M
U107	1826-1952	1	ANALOG SWITCH 4 SPST 16 -P-SOIC	05524	DG412DY
U109	1826-2230	1	IC OP AMP LOW-OFS QUAD 16 PIN PLSTC-SOIC	03285	OP-400GS
U110	1826-1458	1	D/A 8-DGT 16-P-SOIC	02910	DAC-08ED
U111	1826-1952	1	ANALOG SWITCH 4 SPST 16 -P-SOIC	05524	DG412DY
U112	1826-1952	1	ANALOG SWITCH 4 SPST 16 -P-SOIC	05524	DG412DY
U113	1826-2981	1	IC OP AMP PRCN DUAL 8 PIN PLSTC-SOIC	10858	LT1124CS8
U117	1826-2147	1	ANALOG MULTIPLEXER 8 CHNL 16 -P-SOIC	05524	DG408DY
U118	1826-2147	1	ANALOG MULTIPLEXER 8 CHNL 16 -P-SOIC	05524	DG408DY
U120	1826-1952	1	ANALOG SWITCH 4 SPST 16 -P-SOIC	05524	DG412DY
U121	1820-4966	1	IC FF CMOS/HC D-TYPE POS-EDGE-TRIG	01698	SN74HC74D
U123	1826-1594	1	IC COMPARATOR GP SINGLE 8 PIN PLSTC-SOIC	03406	LM311M
VR1	1902-1574	1	DIODE-ZNR 6.8V 5% TO-236 (SOT-23)	02910	BZX84C6V8
VR100	1902-1646	1	DIODE-ZNR 9.1V PD.225W IR500NA	36633	BZX84C9V1LT1
VR101	1902-1646	1	DIODE-ZNR 9.1V PD.225W IR500NA	36633	BZX84C9V1LT1
XU100	1200-1577	1	SOCKET-IC-PLCC 68-CONT SQUARE J-LEAD	01380	3-822472-6
Y1	0410-2134	1	CRYSTAL-QUARTZ 18.432	09620	0410-2134

 **Indicates factory-selected value*

5300 D-E7401-60003-2

SYM	REVISIONS	APPROVED	DATE
A	AS ISSUED, ECO 53-14161 /LN		

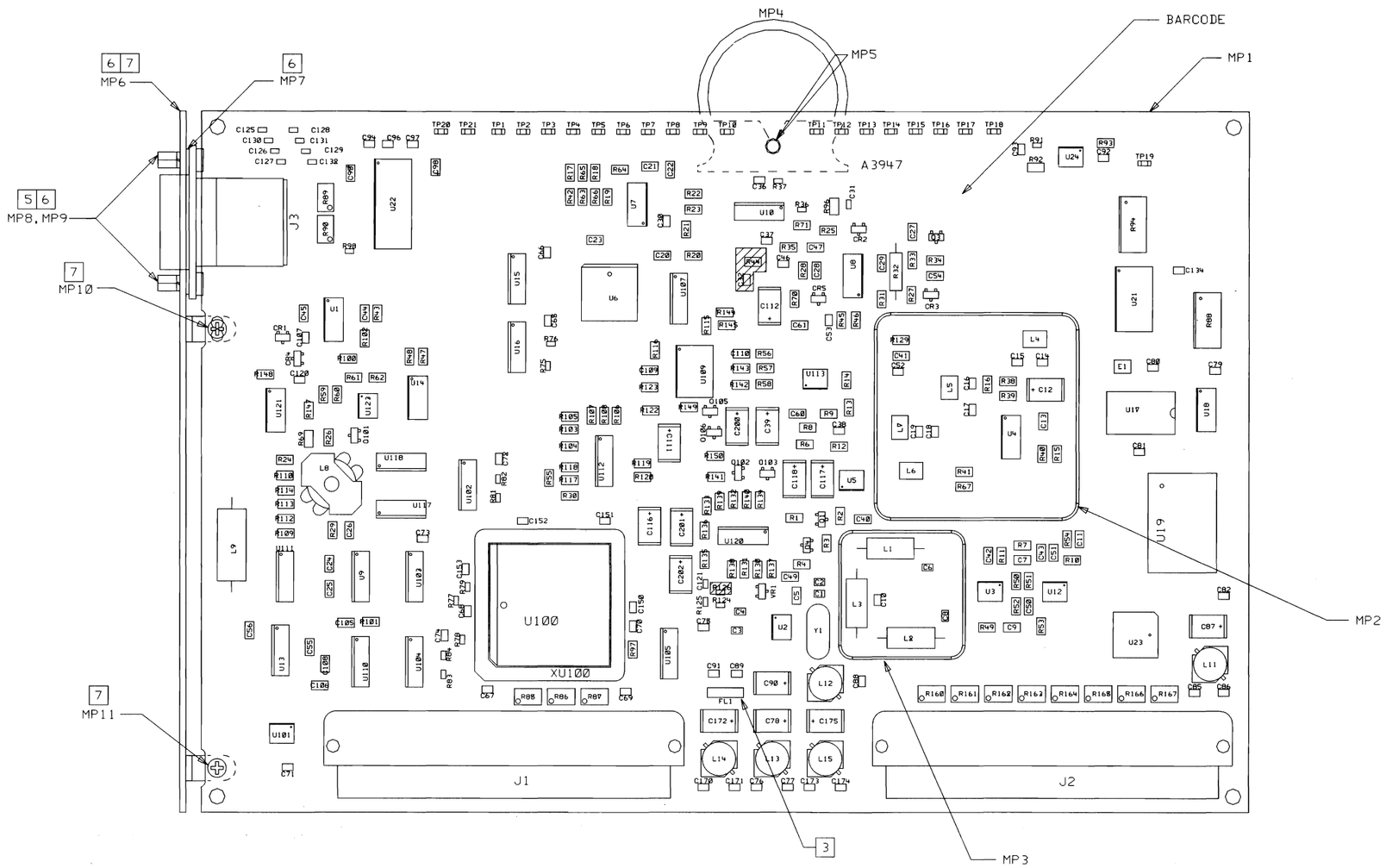

NOTES: UNLESS OTHERWISE SPECIFIED

1. USE RAW BOARD PART NUMBER E7401-20003.
2. THERE IS ONE FINE PITCH PART.
3. FL1 MUST NOT BE EXPOSED TO HALIDE CONTAINING ACID FLUXES.
4. CROSS HATCHED PARTS ARE NOT LOADED AT THIS TIME.
5. USE LOCK WASHER ONLY, DO NOT INSTALL FLAT WASHER ON MP8 AND MP9.
6. PLACE MP7 OVER J3, THEN MP6 AND RETAIN WITH MP8 & MP9 USING THREAD LOCKER (0470-0532) AND TORQUE PER MATRIX.
7. ATTACH MP6 TO MP1 WITH MP10 & MP11 AND TORQUE PER MATRIX.

TORQUE MATRIX	
REF DES	TORQUE VALUE
MP8	7 IN-LBS
MP9	7 IN-LBS
MP10	5 IN-LBS
MP11	5 IN-LBS

SEE E7401 60003 MATERIAL LIST

TOP SIDE

AGILENT TECHNOLOGIES RESTRICTED
THIS DOCUMENT CONTAINS CONFIDENTIAL, PROPRIETARY INFORMATION THAT IS AGILENT TECHNOLOGIES PROPERTY. DO NOT DISCLOSE TO OR DUPLICATE FOR OTHERS EXCEPT AS AUTHORIZED BY AGILENT TECHNOLOGIES.

UNLESS OTHERWISE SPECIFIED, DIMENSIONS ARE IN INCHES.
TOLERANCES: XX.XXX ±.010, XX.XX ±.02
THIRD ANGLE PROJECTION
DO NOT SCALE THIS DRAWING

DRAWN BY | DATE
ENGINEER/CHECKER | DATE
RELEASE TO PROD. | DATE
SUPERSEDES DWG.

ASSEMBLY, PWB OPD & SERIAL
TITLE

FILENAME a1agc003
SCALE NONE
SHEET 1 OF 2
PART NUMBER E7401-60003
D-E7401-60003-2

Agilent Technologies

5300 D-E7401-60003-2

SYM	REVISIONS	APPROVED	DATE
A	AS ISSUED, ECO 53-14161 /LN		

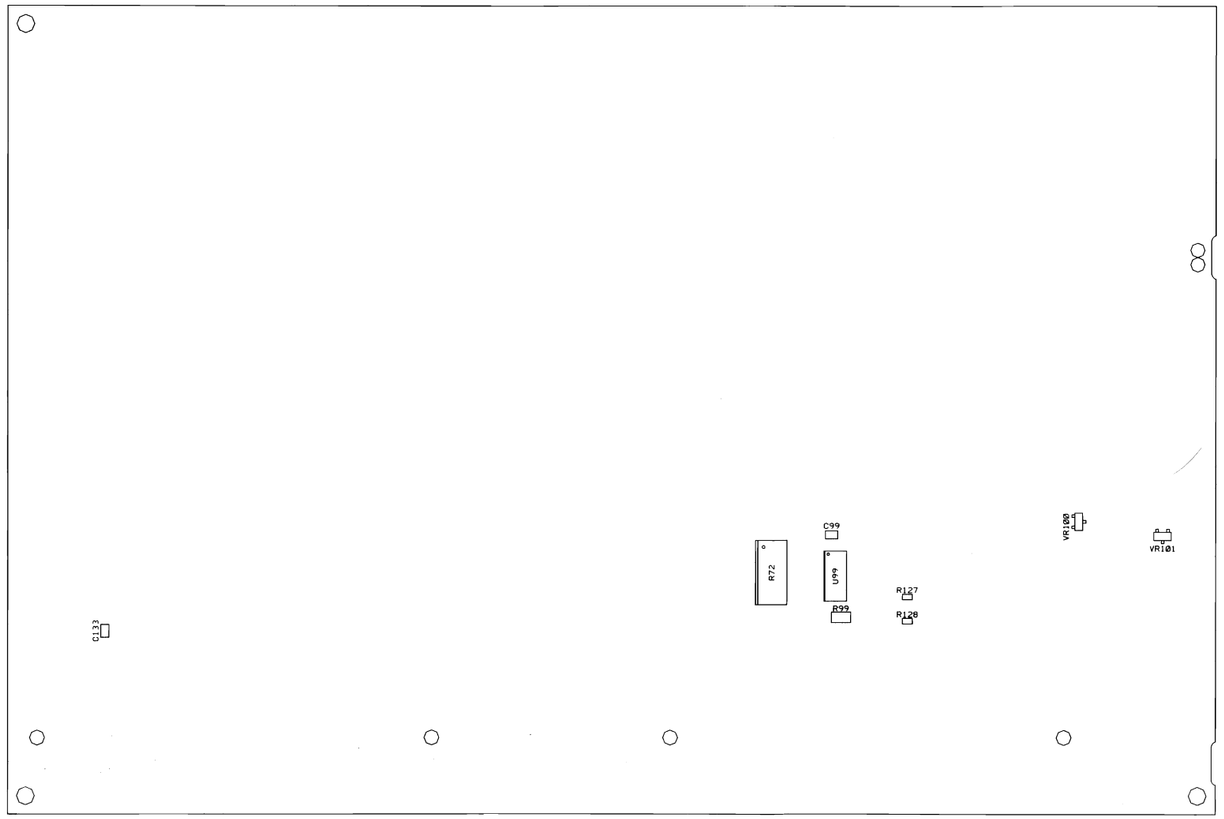

BOTTOM SIDE

AGILENT TECHNOLOGIES RESTRICTED
THIS DOCUMENT CONTAINS CONFIDENTIAL, PROPRIETARY INFORMATION THAT IS AGILENT TECHNOLOGIES PROPERTY. DO NOT DISCLOSE TO OR DUPLICATE FOR OTHERS EXCEPT AS AUTHORIZED BY AGILENT TECHNOLOGIES.

UNLESS OTHERWISE SPECIFIED, DIMENSIONS ARE IN INCHES.
TOLERANCES: XX.XXX ±.010, XX.XX ±.02
THIRD ANGLE PROJECTION
DO NOT SCALE THIS DRAWING

DRAWN BY — DATE
ENGINEER/CHECKER — DATE
RELEASE TO PROD. — DATE
SUPERSEDES DWG.

TITLE: ASSEMBLY, PWB OPD & SERIAL

FILENAME: a6agc003
SCALE: NONE
SHEET 2 OF 2
PART NUMBER: E7401-60003
D-E7401-60003-2

Agilent Technologies

5300	CA3947		D-E7401-60003-1
SYM	REVISIONS	APPROVED	DATE
A	AS ISSUED, ECO 53-14161 /LN		11-17-99
B	CHANGED PER ECO 53-14552 /LN		12-14-99
C	CHANGED PER ECO 53-15780 /N		10-30-00

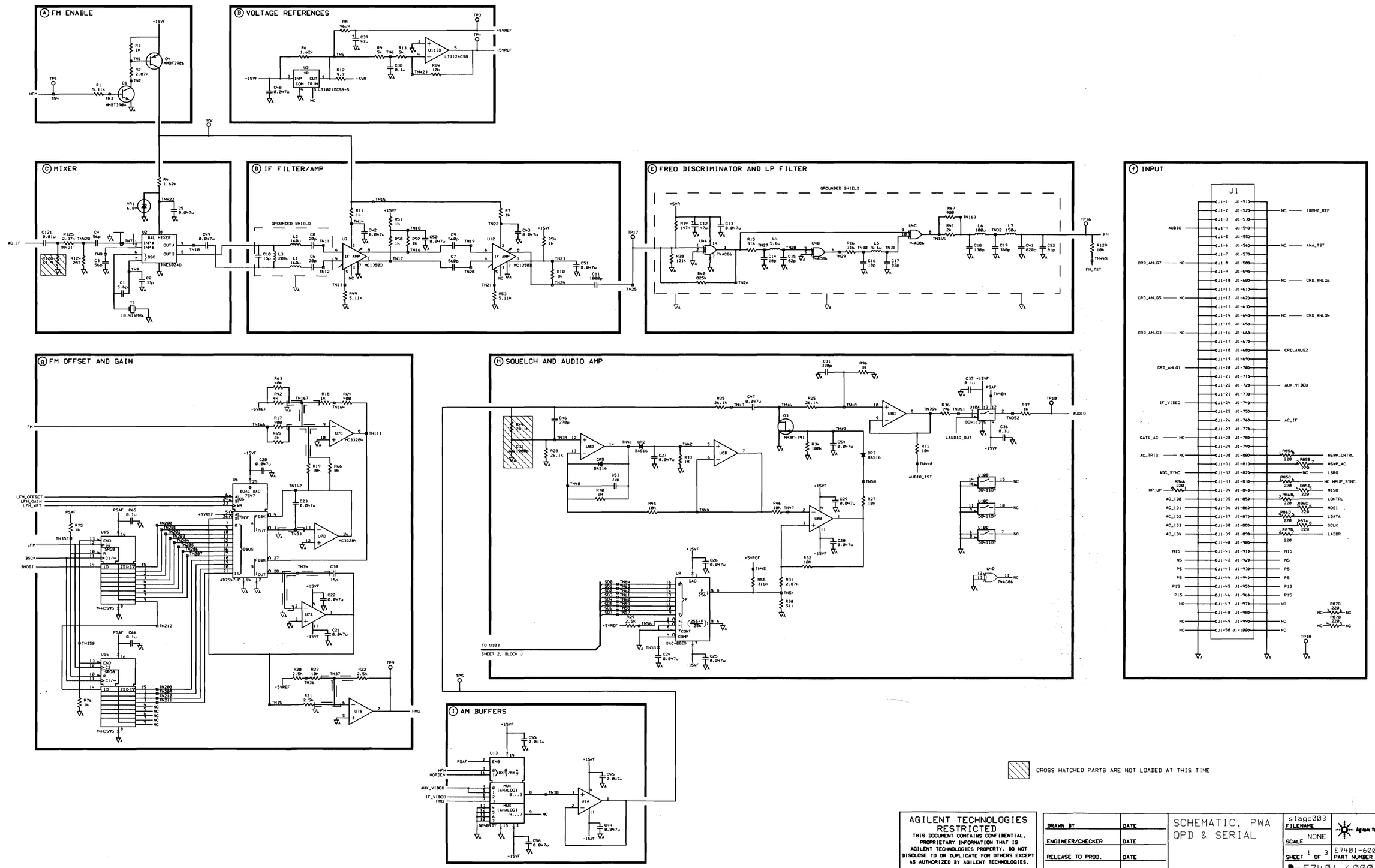

CROSS HATCHED PARTS ARE NOT LOADED AT THIS TIME

AGILENT TECHNOLOGIES RESTRICTED
THIS DOCUMENT CONTAINS CONFIDENTIAL, PROPRIETARY INFORMATION THAT IS AGILENT TECHNOLOGIES PROPERTY. DO NOT DISCLOSE TO OR DUPLICATE FOR OTHERS EXCEPT AS AUTHORIZED BY AGILENT TECHNOLOGIES.

DRAWN BY	DATE	SCHEMATIC, PWA OPD & SERIAL	slagc003 FILENAME
ENGINEER/CHECKER	DATE		SCALE NONE
RELEASE TO PROD.	DATE		SHEET 1 OF 3
SUPERSEDES DWG.		TITLE	E7401-60003 PART NUMBER
			D-E7401-60003-1

5300 CA3947 D-E7401-60003-1

SYM	REVISIONS	APPROVED	DATE
A	AS ISSUED, ECO 53-14161 /LN		11-17-99
B	CHANGED PER ECO 53-14552 /LN		12-14-99
C	CHANGED PER ECO 53-15780 /N		10-30-00

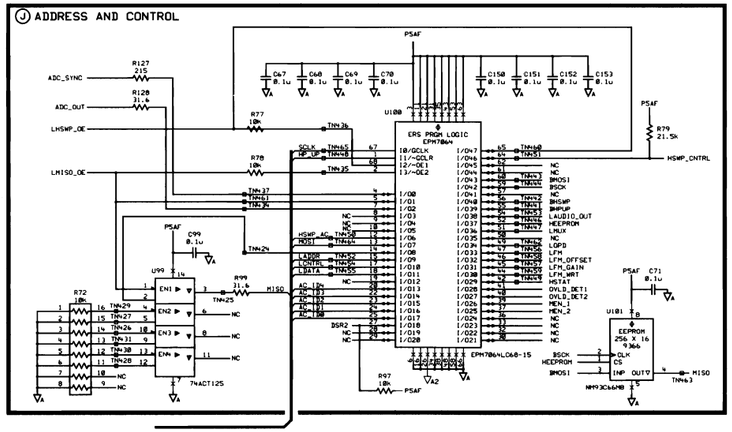

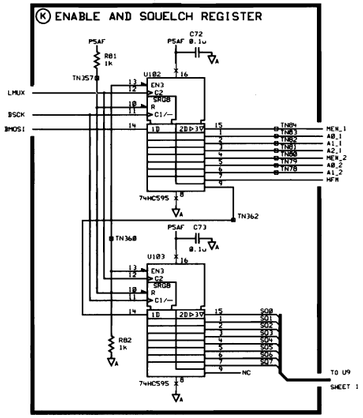

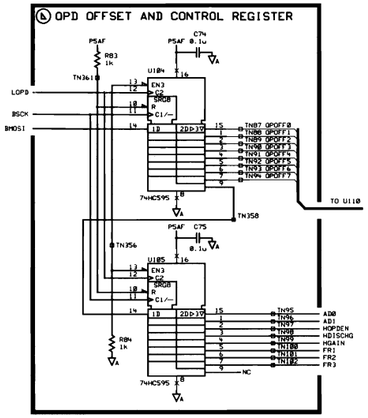

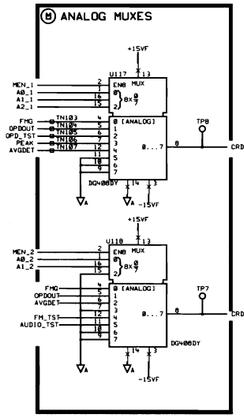

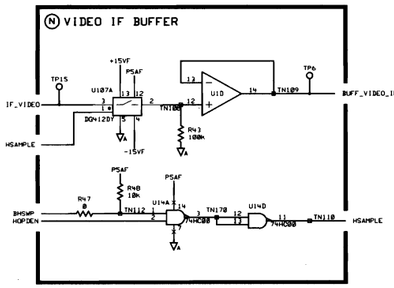

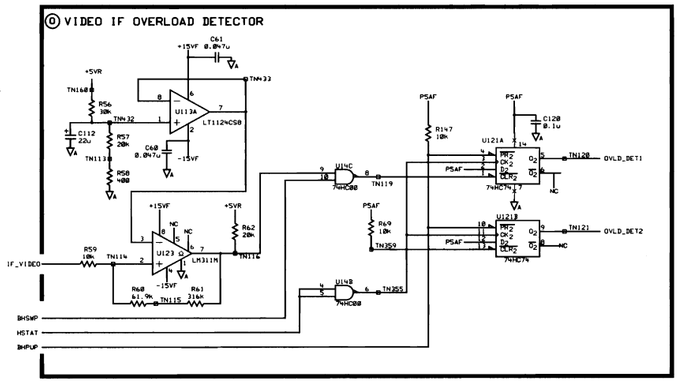

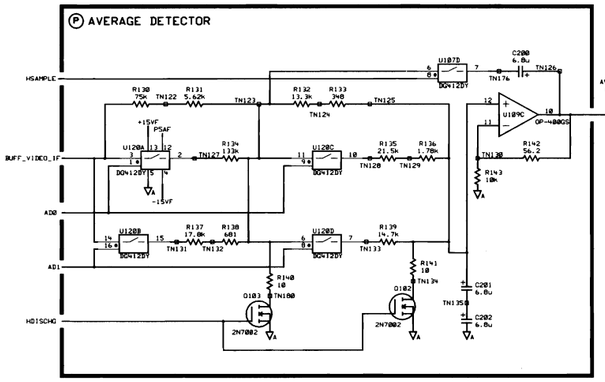

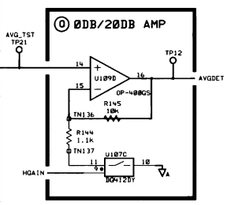

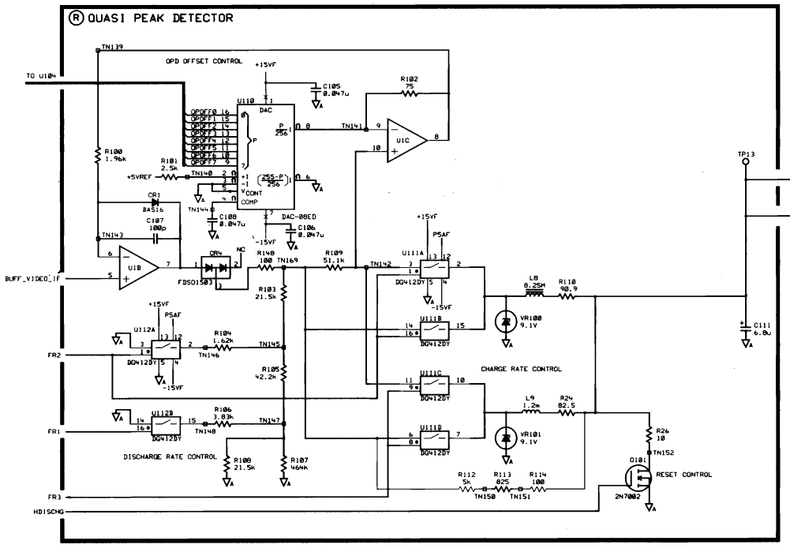

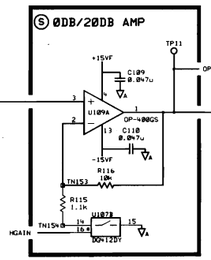

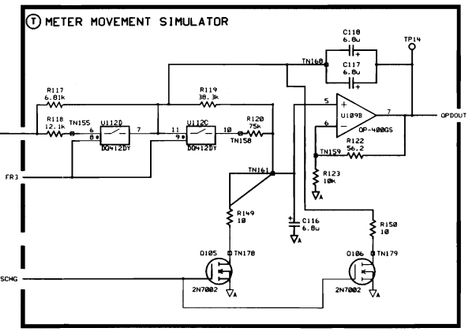

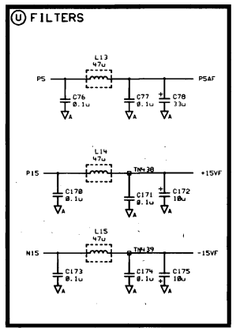

AGILENT TECHNOLOGIES
RESTRICTED
THIS DOCUMENT CONTAINS CONFIDENTIAL, PROPRIETARY INFORMATION THAT IS AGILENT TECHNOLOGIES PROPERTY. DO NOT DISCLOSE TO OR DUPLICATE FOR OTHERS EXCEPT AS AUTHORIZED BY AGILENT TECHNOLOGIES.

DRAWN BY	DATE	SCHEMATIC, PWA OPD & SERIAL	s2agc003 FILENAME
ENGINEER/CHECKER	DATE		SCALE NONE
RELEASE TO PROD.	DATE		SHEET 2 OF 3
SUPERSEDES DWG.		TITLE	E7401-60003 PART NUMBER

Agilent Technologies

D-E7401-60003-1

5300 CA3947 ■-E7401-60003-1

SYM	REVISIONS	APPROVED	DATE
A	AS ISSUED, ECO 53-14161 /LN		11-17-99
B	CHANGED PER ECO 53-14552 /LN		12-14-99
C	CHANGED PER ECO 53-15780 /N		10-30-00

V INPUT

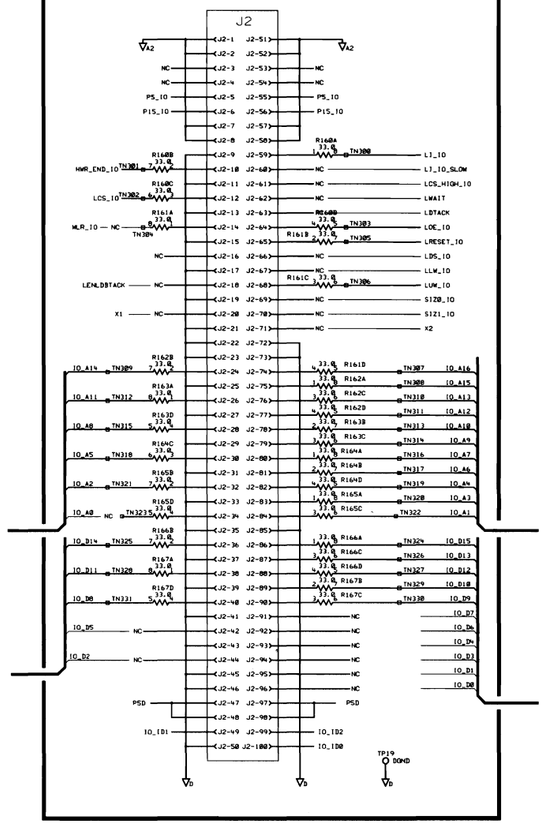

W SUPER I/O

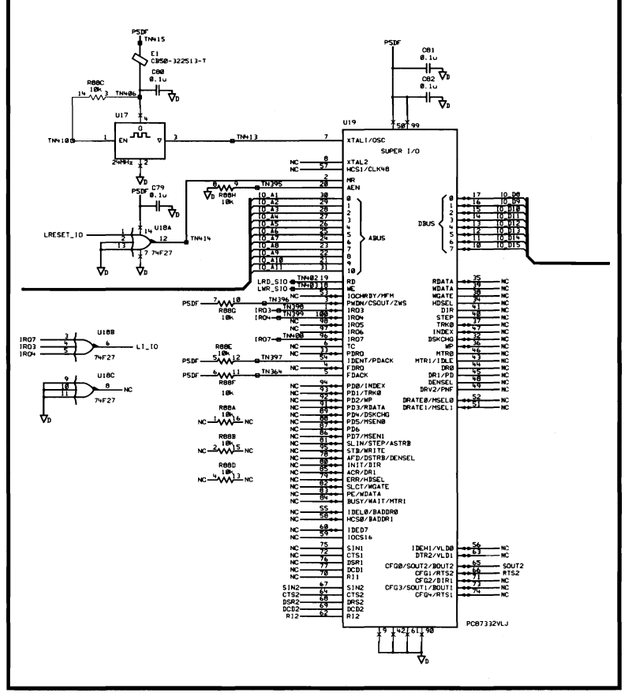

X CONTROL AND ID

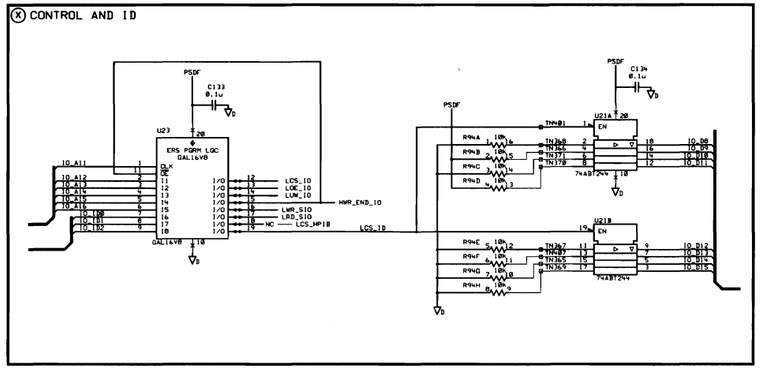

Y POWER SUPPLY

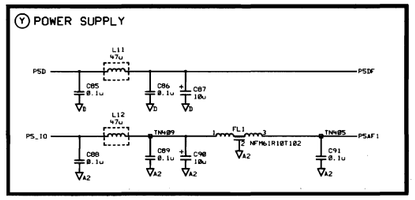

Z COM B (SERIAL PORT)

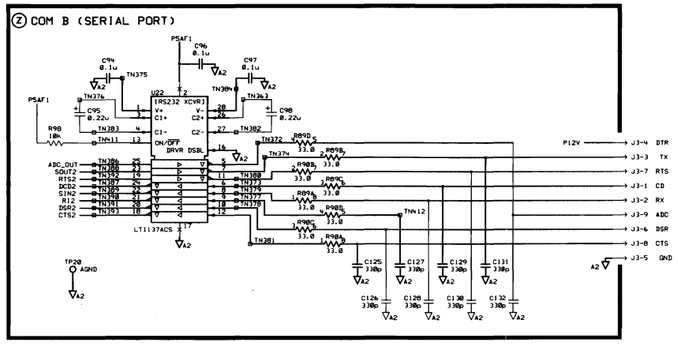

AA P12

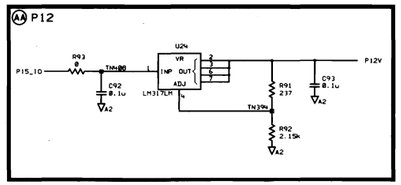

AGILENT TECHNOLOGIES RESTRICTED
THIS DOCUMENT CONTAINS CONFIDENTIAL, PROPRIETARY INFORMATION THAT IS AGILENT TECHNOLOGIES PROPERTY. DO NOT DISCLOSE TO OR DUPLICATE FOR OTHERS EXCEPT AS AUTHORIZED BY AGILENT TECHNOLOGIES.

DRAWN BY	DATE	SCHEMATIC, PWA OPD & SERIAL	s3agc003 FILENAME
ENGINEER/CHECKER	DATE		SCALE NONE
RELEASE TO PROD.	DATE		SHEET 3 OF 3
SUPERSEDES DWG.		TITLE	E7401-60003 PART NUMBER

■-E7401-60003-1

Component-Level Information Packet for E4401-60203

1.5 GHz RF (50 Ohm)

Agilent Technologies

Agilent Part Number: E4401-90291
Printed in Malaysia April 2001

Notice

The information contained in this document is subject to change without notice. Agilent Technologies makes no warranty of any kind with regard to this material, including but not limited to, the implied warranties of merchantability and fitness for a particular purpose. Agilent Technologies shall not be liable for errors contained herein or for incidental or consequential damages in connection with the furnishing, performance, or use of this material.

© Copyright Agilent Technologies Inc. 2000, 2001
All Rights Reserved. Reproduction, adaptation, or translation without prior written permission is prohibited, except as allowed under the copyright laws.

Agilent Part Number E4401-60203
1.5 GHz RF (50 Ohm)

Reference Designator	Agilent Part Number	Qty	Description	Mgr Code	Mfr Part Number
C1	0160-7798	1	CAP-FXD 0.1uF +-10% 50 V CER X7R	06352	C2012X7R1H104K
C2	0160-7798	1	CAP-FXD 0.1uF +-10% 50 V CER X7R	06352	C2012X7R1H104K
C3	0160-7862	1	CAP-FXD 470pF +-10% 50 V CER X7R	02010	06035C471KAT
C4	0160-8149	1	CAP-FXD 1uF +-20% 100 V CER X7R	03553	ATC900C105MW100
C5	0160-7862	1	CAP-FXD 470pF +-10% 50 V CER X7R	02010	06035C471KAT
C6	0160-7798	1	CAP-FXD 0.1uF +-10% 50 V CER X7R	06352	C2012X7R1H104K
C7	0160-7862	1	CAP-FXD 470pF +-10% 50 V CER X7R	02010	06035C471KAT
C8	0160-7856	1	CAP-FXD 330pF +-10% 50 V CER X7R	02010	06035C331KAT
C9	0160-7856	1	CAP-FXD 330pF +-10% 50 V CER X7R	02010	06035C331KAT
C10	0160-7856	1	CAP-FXD 330pF +-10% 50 V CER X7R	02010	06035C331KAT
C11	0160-7856	1	CAP-FXD 330pF +-10% 50 V CER X7R	02010	06035C331KAT
C12	0160-7798	1	CAP-FXD 0.1uF +-10% 50 V CER X7R	06352	C2012X7R1H104K
C13	0160-7860	1	CAP-FXD 4.7pF +-5.31% 50 V CER C0G	02010	06035A4R7CAT
C14	0160-7798	1	CAP-FXD 0.1uF +-10% 50 V CER X7R	06352	C2012X7R1H104K
C15	0160-7798	1	CAP-FXD 0.1uF +-10% 50 V CER X7R	06352	C2012X7R1H104K
C16	0160-7798	1	CAP-FXD 0.1uF +-10% 50 V CER X7R	06352	C2012X7R1H104K
C17	0160-7833	1	CAP-FXD 1.8pF +-13.89% 50 V CER C0G	02010	06035A1R8CAT
C18	0160-7798	1	CAP-FXD 0.1uF +-10% 50 V CER X7R	06352	C2012X7R1H104K
C19	0160-7830	1	CAP-FXD 1pF +-25% 50 V CER C0G	12340	C0603C109C5GAC
C20	0160-7856	1	CAP-FXD 330pF +-10% 50 V CER X7R	02010	06035C331KAT
C21	0160-7856	1	CAP-FXD 330pF +-10% 50 V CER X7R	02010	06035C331KAT
C22	0160-7856	1	CAP-FXD 330pF +-10% 50 V CER X7R	02010	06035C331KAT
C23	0160-7856	1	CAP-FXD 330pF +-10% 50 V CER X7R	02010	06035C331KAT
C24	0160-7856	1	CAP-FXD 330pF +-10% 50 V CER X7R	02010	06035C331KAT
C25	0160-7856	1	CAP-FXD 330pF +-10% 50 V CER X7R	02010	06035C331KAT
C26	0160-7856	1	CAP-FXD 330pF +-10% 50 V CER X7R	02010	06035C331KAT
C27	0160-7856	1	CAP-FXD 330pF +-10% 50 V CER X7R	02010	06035C331KAT
C28	0160-7856	1	CAP-FXD 330pF +-10% 50 V CER X7R	02010	06035C331KAT

**Indicates factory-selected value*

Agilent Part Number E4401-60203
1.5 GHz RF (50 Ohm)

Reference Designator	Agilent Part Number	Qty	Description	Mgr Code	Mfr Part Number
C29	0160-7856	1	CAP-FXD 330pF +-10% 50 V CER X7R	02010	06035C331KAT
C30	0160-7861	1	CAP-FXD 47pF +-5% 50 V CER C0G	02010	06035A470JAT
C31	0180-3751	1	CAP-FXD 1uF +-20% 35 V TA	02010	TAJB105M035
C32	0160-7751	1	CAP-FXD 0.01uF +-10% 50 V CER X7R	02010	06035C103KAT
C33	0160-7798	1	CAP-FXD 0.1uF +-10% 50 V CER X7R	06352	C2012X7R1H104K
C34	0160-7751	1	CAP-FXD 0.01uF +-10% 50 V CER X7R	02010	06035C103KAT
C35	0160-7798	1	CAP-FXD 0.1uF +-10% 50 V CER X7R	06352	C2012X7R1H104K
C36	0160-7798	1	CAP-FXD 0.1uF +-10% 50 V CER X7R	06352	C2012X7R1H104K
C37	0160-7798	1	CAP-FXD 0.1uF +-10% 50 V CER X7R	06352	C2012X7R1H104K
C38	0160-7835	1	CAP-FXD 100pF +-5% 50 V CER C0G	02010	06035A101JAT
C39	0160-7835	1	CAP-FXD 100pF +-5% 50 V CER C0G	02010	06035A101JAT
C40	0160-7835	1	CAP-FXD 100pF +-5% 50 V CER C0G	02010	06035A101JAT
C41	0160-7835	1	CAP-FXD 100pF +-5% 50 V CER C0G	02010	06035A101JAT
C42	0160-7835	1	CAP-FXD 100pF +-5% 50 V CER C0G	02010	06035A101JAT
C43	0160-7835	1	CAP-FXD 100pF +-5% 50 V CER C0G	02010	06035A101JAT
C44	0160-7835	1	CAP-FXD 100pF +-5% 50 V CER C0G	02010	06035A101JAT
C45	0160-7835	1	CAP-FXD 100pF +-5% 50 V CER C0G	02010	06035A101JAT
C46	0160-7835	1	CAP-FXD 100pF +-5% 50 V CER C0G	02010	06035A101JAT
C47	0160-7830	1	CAP-FXD 1pF +-25% 50 V CER C0G	12340	C0603C109C5GAC
C48	0160-7830	1	CAP-FXD 1pF +-25% 50 V CER C0G	12340	C0603C109C5GAC
C49	0160-7830	1	CAP-FXD 1pF +-25% 50 V CER C0G	12340	C0603C109C5GAC
C50	0160-7830	1	CAP-FXD 1pF +-25% 50 V CER C0G	12340	C0603C109C5GAC
C51	0160-7835	1	CAP-FXD 100pF +-5% 50 V CER C0G	02010	06035A101JAT
C52	0160-7798	1	CAP-FXD 0.1uF +-10% 50 V CER X7R	06352	C2012X7R1H104K
C53	0160-7751	1	CAP-FXD 0.01uF +-10% 50 V CER X7R	02010	06035C103KAT
C54	0160-7751	1	CAP-FXD 0.01uF +-10% 50 V CER X7R	02010	06035C103KAT
C55	0160-7748	1	CAP-FXD 1000pF +-10% 50 V CER X7R	02010	06035C102KAT
C56	0160-7835	1	CAP-FXD 100pF +-5% 50 V CER C0G	02010	06035A101JAT
C57	0160-7835	1	CAP-FXD 100pF +-5% 50 V CER C0G	02010	06035A101JAT
C58	0160-7798	1	CAP-FXD 0.1uF +-10% 50 V CER X7R	06352	C2012X7R1H104K

 **Indicates factory-selected value*

Agilent Part Number E4401-60203
1.5 GHz RF (50 Ohm)

Reference Designator	Agilent Part Number	Qty	Description	Mgr Code	Mfr Part Number
C59	0160-7835	1	CAP-FXD 100pF +-5% 50 V CER C0G	02010	06035A101JAT
C60	0160-7751	1	CAP-FXD 0.01uF +-10% 50 V CER X7R	02010	06035C103KAT
C61	0160-7751	1	CAP-FXD 0.01uF +-10% 50 V CER X7R	02010	06035C103KAT
C62	0160-7835	1	CAP-FXD 100pF +-5% 50 V CER C0G	02010	06035A101JAT
C63	0160-7835	1	CAP-FXD 100pF +-5% 50 V CER C0G	02010	06035A101JAT
C64	0160-7798	1	CAP-FXD 0.1uF +-10% 50 V CER X7R	06352	C2012X7R1H104K
C65	0160-7748	1	CAP-FXD 1000pF +-10% 50 V CER X7R	02010	06035C102KAT
C66	0160-7835	1	CAP-FXD 100pF +-5% 50 V CER C0G	02010	06035A101JAT
C67	0160-7751	1	CAP-FXD 0.01uF +-10% 50 V CER X7R	02010	06035C103KAT
C68	0160-7751	1	CAP-FXD 0.01uF +-10% 50 V CER X7R	02010	06035C103KAT
C69	0160-7835	1	CAP-FXD 100pF +-5% 50 V CER C0G	02010	06035A101JAT
C70	0160-7835	1	CAP-FXD 100pF +-5% 50 V CER C0G	02010	06035A101JAT
C71	0160-7748	1	CAP-FXD 1000pF +-10% 50 V CER X7R	02010	06035C102KAT
C72	0160-7835	1	CAP-FXD 100pF +-5% 50 V CER C0G	02010	06035A101JAT
C73	0160-7835	1	CAP-FXD 100pF +-5% 50 V CER C0G	02010	06035A101JAT
C74	0160-7751	1	CAP-FXD 0.01uF +-10% 50 V CER X7R	02010	06035C103KAT
C75	0160-7798	1	CAP-FXD 0.1uF +-10% 50 V CER X7R	06352	C2012X7R1H104K
C76	0160-7751	1	CAP-FXD 0.01uF +-10% 50 V CER X7R	02010	06035C103KAT
C77	0160-7748	1	CAP-FXD 1000pF +-10% 50 V CER X7R	02010	06035C102KAT
C78	0160-7835	1	CAP-FXD 100pF +-5% 50 V CER C0G	02010	06035A101JAT
C79	0160-7835	1	CAP-FXD 100pF +-5% 50 V CER C0G	02010	06035A101JAT
C80	0160-7835	1	CAP-FXD 100pF +-5% 50 V CER C0G	02010	06035A101JAT
C81	0160-7835	1	CAP-FXD 100pF +-5% 50 V CER C0G	02010	06035A101JAT
C82	0160-7835	1	CAP-FXD 100pF +-5% 50 V CER C0G	02010	06035A101JAT
C83	0160-7835	1	CAP-FXD 100pF +-5% 50 V CER C0G	02010	06035A101JAT
C84	0160-7835	1	CAP-FXD 100pF +-5% 50 V CER C0G	02010	06035A101JAT
C85	0160-7835	1	CAP-FXD 100pF +-5% 50 V CER C0G	02010	06035A101JAT
C86	0160-7748	1	CAP-FXD 1000pF +-10% 50 V CER X7R	02010	06035C102KAT
C87	0160-7751	1	CAP-FXD 0.01uF +-10% 50 V CER X7R	02010	06035C103KAT
C88	0160-7798	1	CAP-FXD 0.1uF +-10% 50 V CER X7R	06352	C2012X7R1H104K

**Indicates factory-selected value*

Agilent Part Number E4401-60203
1.5 GHz RF (50 Ohm)

Reference Designator	Agilent Part Number	Qty	Description	Mgr Code	Mfr Part Number
C89	0160-7751	1	CAP-FXD 0.01uF +-10% 50 V CER X7R	02010	06035C103KAT
C90	0160-7832	1	CAP-FXD 1.5pF +-16.67% 50 V CER C0G	02010	06035A1R5CAT
C91	0160-7832	1	CAP-FXD 1.5pF +-16.67% 50 V CER C0G	02010	06035A1R5CAT
C95	0160-7835	1	CAP-FXD 100pF +-5% 50 V CER C0G	02010	06035A101JAT
C97	0160-7835	1	CAP-FXD 100pF +-5% 50 V CER C0G	02010	06035A101JAT
C98	0160-7835	1	CAP-FXD 100pF +-5% 50 V CER C0G	02010	06035A101JAT
C99	0180-4228	1	CAP-FXD 47uF +-20% 10 V TA	02010	TAJD476M010
C100	0160-7751	1	CAP-FXD 0.01uF +-10% 50 V CER X7R	02010	06035C103KAT
C101	0160-7751	1	CAP-FXD 0.01uF +-10% 50 V CER X7R	02010	06035C103KAT
C102	0160-7751	1	CAP-FXD 0.01uF +-10% 50 V CER X7R	02010	06035C103KAT
C103	0160-7830	1	CAP-FXD 1pF +-25% 50 V CER C0G	12340	C0603C109C5GAC
C104	0160-7830	1	CAP-FXD 1pF +-25% 50 V CER C0G	12340	C0603C109C5GAC
C105	0160-7751	1	CAP-FXD 0.01uF +-10% 50 V CER X7R	02010	06035C103KAT
C106	0160-7751	1	CAP-FXD 0.01uF +-10% 50 V CER X7R	02010	06035C103KAT
C107	0160-7751	1	CAP-FXD 0.01uF +-10% 50 V CER X7R	02010	06035C103KAT
C109	0160-7798	1	CAP-FXD 0.1uF +-10% 50 V CER X7R	06352	C2012X7R1H104K
C110	0160-7798	1	CAP-FXD 0.1uF +-10% 50 V CER X7R	06352	C2012X7R1H104K
C112	0160-7750	1	CAP-FXD 1800pF +-10% 50 V CER X7R	02010	06035C182KAT
C113	0160-7835	1	CAP-FXD 100pF +-5% 50 V CER C0G	02010	06035A101JAT
C114	0160-7835	1	CAP-FXD 100pF +-5% 50 V CER C0G	02010	06035A101JAT
C120	0160-7835	1	CAP-FXD 100pF +-5% 50 V CER C0G	02010	06035A101JAT
C121	0160-7798	1	CAP-FXD 0.1uF +-10% 50 V CER X7R	06352	C2012X7R1H104K
C122	0160-7798	1	CAP-FXD 0.1uF +-10% 50 V CER X7R	06352	C2012X7R1H104K
C123	0160-7835	1	CAP-FXD 100pF +-5% 50 V CER C0G	02010	06035A101JAT
C124	0160-7835	1	CAP-FXD 100pF +-5% 50 V CER C0G	02010	06035A101JAT
C127	0160-7835	1	CAP-FXD 100pF +-5% 50 V CER C0G	02010	06035A101JAT
C128	0160-7835	1	CAP-FXD 100pF +-5% 50 V CER C0G	02010	06035A101JAT
C129	0180-3751	1	CAP-FXD 1uF +-20% 35 V TA	02010	TAJB105M035
C130	0160-7835	1	CAP-FXD 100pF +-5% 50 V CER C0G	02010	06035A101JAT
C131	0160-7835	1	CAP-FXD 100pF +-5% 50 V CER C0G	02010	06035A101JAT

 **Indicates factory-selected value*

Agilent Part Number E4401-60203
1.5 GHz RF (50 Ohm)

Reference Designator	Agilent Part Number	Qty	Description	Mgr Code	Mfr Part Number
C132	0160-7751	1	CAP-FXD 0.01uF +-10% 50 V CER X7R	02010	06035C103KAT
C133	0160-7835	1	CAP-FXD 100pF +-5% 50 V CER C0G	02010	06035A101JAT
C134	0180-3751	1	CAP-FXD 1uF +-20% 35 V TA	02010	TAJB105M035
C135	0160-7835	1	CAP-FXD 100pF +-5% 50 V CER C0G	02010	06035A101JAT
C136	0160-7830	1	CAP-FXD 1pF +-25% 50 V CER C0G	12340	C0603C109C5GAC
C137	0160-7835	1	CAP-FXD 100pF +-5% 50 V CER C0G	02010	06035A101JAT
C138	0160-7835	1	CAP-FXD 100pF +-5% 50 V CER C0G	02010	06035A101JAT
C139	0160-7847	1	CAP-FXD 2.2pF +-11.36% 50 V CER C0G	02010	06035A2R2CAT
C140	0160-7860	1	CAP-FXD 4.7pF +-5.31% 50 V CER C0G	02010	06035A4R7CAT
C141	0160-7835	1	CAP-FXD 100pF +-5% 50 V CER C0G	02010	06035A101JAT
C142	0160-7835	1	CAP-FXD 100pF +-5% 50 V CER C0G	02010	06035A101JAT
C143	0160-7835	1	CAP-FXD 100pF +-5% 50 V CER C0G	02010	06035A101JAT
C144	0160-7853	1	CAP-FXD 3.3pF +-7.6% 50 V CER C0G	02010	06035A3R3CAT
C145	0160-7982	1	CAP-FXD 200pF +-5% 50 V CER C0G	02010	06035A201JAT
C146	0160-7984	1	CAP-FXD 300pF +-5% 50 V CER C0G	02010	06035A301JATA
C147	0160-7751	1	CAP-FXD 0.01uF +-10% 50 V CER X7R	02010	06035C103KAT
C148	0160-7751	1	CAP-FXD 0.01uF +-10% 50 V CER X7R	02010	06035C103KAT
C149	0160-7976	1	CAP-FXD 62pF +-5% 50 V CER C0G	06352	C1608COG1H620J
C150	0160-7751	1	CAP-FXD 0.01uF +-10% 50 V CER X7R	02010	06035C103KAT
C151	0160-7984	1	CAP-FXD 300pF +-5% 50 V CER C0G	02010	06035A301JATA
C152	0160-7751	1	CAP-FXD 0.01uF +-10% 50 V CER X7R	02010	06035C103KAT
C153	0160-7981	1	CAP-FXD 160pF +-5% 50 V CER C0G	06352	C1608COG1H161J
C154	0160-7751	1	CAP-FXD 0.01uF +-10% 50 V CER X7R	02010	06035C103KAT
C155	0160-7751	1	CAP-FXD 0.01uF +-10% 50 V CER X7R	02010	06035C103KAT
C156	0160-7751	1	CAP-FXD 0.01uF +-10% 50 V CER X7R	02010	06035C103KAT
C157	0160-7751	1	CAP-FXD 0.01uF +-10% 50 V CER X7R	02010	06035C103KAT
C158	0160-7751	1	CAP-FXD 0.01uF +-10% 50 V CER X7R	02010	06035C103KAT
C159	0160-7751	1	CAP-FXD 0.01uF +-10% 50 V CER X7R	02010	06035C103KAT
C160	0160-7748	1	CAP-FXD 1000pF +-10% 50 V CER X7R	02010	06035C102KAT
C161	0160-7835	1	CAP-FXD 100pF +-5% 50 V CER C0G	02010	06035A101JAT

**Indicates factory-selected value*

Agilent Part Number E4401-60203
1.5 GHz RF (50 Ohm)

Reference Designator	Agilent Part Number	Qty	Description	Mgr Code	Mfr Part Number
C162	0160-7751	1	CAP-FXD 0.01uF +-10% 50 V CER X7R	02010	06035C103KAT
C163	0160-7751	1	CAP-FXD 0.01uF +-10% 50 V CER X7R	02010	06035C103KAT
C164	0160-7751	1	CAP-FXD 0.01uF +-10% 50 V CER X7R	02010	06035C103KAT
C165	0160-7751	1	CAP-FXD 0.01uF +-10% 50 V CER X7R	02010	06035C103KAT
C166	0160-7751	1	CAP-FXD 0.01uF +-10% 50 V CER X7R	02010	06035C103KAT
C167	0160-7751	1	CAP-FXD 0.01uF +-10% 50 V CER X7R	02010	06035C103KAT
C168	0160-7751	1	CAP-FXD 0.01uF +-10% 50 V CER X7R	02010	06035C103KAT
C169	0160-7751	1	CAP-FXD 0.01uF +-10% 50 V CER X7R	02010	06035C103KAT
C170	0160-7751	1	CAP-FXD 0.01uF +-10% 50 V CER X7R	02010	06035C103KAT
C171	0160-7845	1	CAP-FXD 180pF +-5% 50 V CER C0G	02010	06035A181JAT
C172	0160-5953	1	CAP-FXD 270pF +-5% 50 V CER C0G	02010	08055C271JAT A
C173	0160-7749	1	CAP-FXD 22pF +-5% 50 V CER C0G	02010	06035A220JAT
C174	0160-7751	1	CAP-FXD 0.01uF +-10% 50 V CER X7R	02010	06035C103KAT
C175	0160-7837	1	CAP-FXD 12pF +-5% 50 V CER C0G	02010	06035A120JAT
C176	0160-7798	1	CAP-FXD 0.1uF +-10% 50 V CER X7R	06352	C2012X7R1H104K
C177	0160-7853	1	CAP-FXD 3.3pF +-7.6% 50 V CER C0G	02010	06035A3R3CAT
C178	0160-7751	1	CAP-FXD 0.01uF +-10% 50 V CER X7R	02010	06035C103KAT
C179	0160-7798	1	CAP-FXD 0.1uF +-10% 50 V CER X7R	06352	C2012X7R1H104K
C180	0160-7751	1	CAP-FXD 0.01uF +-10% 50 V CER X7R	02010	06035C103KAT
C181	0160-7751	1	CAP-FXD 0.01uF +-10% 50 V CER X7R	02010	06035C103KAT
C182	0160-7751	1	CAP-FXD 0.01uF +-10% 50 V CER X7R	02010	06035C103KAT
C183	0160-7751	1	CAP-FXD 0.01uF +-10% 50 V CER X7R	02010	06035C103KAT
C184	0160-7798	1	CAP-FXD 0.1uF +-10% 50 V CER X7R	06352	C2012X7R1H104K
C185	0160-7798	1	CAP-FXD 0.1uF +-10% 50 V CER X7R	06352	C2012X7R1H104K
C186	0160-7751	1	CAP-FXD 0.01uF +-10% 50 V CER X7R	02010	06035C103KAT
C187	0160-7751	1	CAP-FXD 0.01uF +-10% 50 V CER X7R	02010	06035C103KAT
C188	0160-7751	1	CAP-FXD 0.01uF +-10% 50 V CER X7R	02010	06035C103KAT
C189	0160-7751	1	CAP-FXD 0.01uF +-10% 50 V CER X7R	02010	06035C103KAT
C190	0160-7798	1	CAP-FXD 0.1uF +-10% 50 V CER X7R	06352	C2012X7R1H104K
C191	0160-7751	1	CAP-FXD 0.01uF +-10% 50 V CER X7R	02010	06035C103KAT

 **Indicates factory-selected value*

Agilent Part Number E4401-60203
1.5 GHz RF (50 Ohm)

Reference Designator	Agilent Part Number	Qty	Description	Mgr Code	Mfr Part Number
C192	0160-7751	1	CAP-FXD 0.01uF +-10% 50 V CER X7R	02010	06035C103KAT
C193	0160-7751	1	CAP-FXD 0.01uF +-10% 50 V CER X7R	02010	06035C103KAT
C194	0160-7405	1	CAP-FXD 560pF +-5% 50 V CER C0G	06352	C2012C0G1H561J
C195	0160-7798	1	CAP-FXD 0.1uF +-10% 50 V CER X7R	06352	C2012X7R1H104K
C196	0180-4228	1	CAP-FXD 47uF +-20% 10 V TA	02010	TAJD476M010
C197	0160-7988	1	CAP-FXD 470pF +-5% 50 V CER C0G	06352	C1608COG1H471J
C198	0160-7751	1	CAP-FXD 0.01uF +-10% 50 V CER X7R	02010	06035C103KAT
C199	0160-7751	1	CAP-FXD 0.01uF +-10% 50 V CER X7R	02010	06035C103KAT
C200	0160-7798	1	CAP-FXD 0.1uF +-10% 50 V CER X7R	06352	C2012X7R1H104K
C201	0160-7751	1	CAP-FXD 0.01uF +-10% 50 V CER X7R	02010	06035C103KAT
C202	0160-7751	1	CAP-FXD 0.01uF +-10% 50 V CER X7R	02010	06035C103KAT
C203	0160-7798	1	CAP-FXD 0.1uF +-10% 50 V CER X7R	06352	C2012X7R1H104K
C204	0160-7751	1	CAP-FXD 0.01uF +-10% 50 V CER X7R	02010	06035C103KAT
C205	0160-7751	1	CAP-FXD 0.01uF +-10% 50 V CER X7R	02010	06035C103KAT
C206	0160-7751	1	CAP-FXD 0.01uF +-10% 50 V CER X7R	02010	06035C103KAT
C207	0160-7798	1	CAP-FXD 0.1uF +-10% 50 V CER X7R	06352	C2012X7R1H104K
C208	0160-7751	1	CAP-FXD 0.01uF +-10% 50 V CER X7R	02010	06035C103KAT
C209	0160-7751	1	CAP-FXD 0.01uF +-10% 50 V CER X7R	02010	06035C103KAT
C210	0160-7751	1	CAP-FXD 0.01uF +-10% 50 V CER X7R	02010	06035C103KAT
C211	0160-7798	1	CAP-FXD 0.1uF +-10% 50 V CER X7R	06352	C2012X7R1H104K
C212	0160-7751	1	CAP-FXD 0.01uF +-10% 50 V CER X7R	02010	06035C103KAT
C213	0160-7798	1	CAP-FXD 0.1uF +-10% 50 V CER X7R	06352	C2012X7R1H104K
C214	0160-7798	1	CAP-FXD 0.1uF +-10% 50 V CER X7R	06352	C2012X7R1H104K
C215	0160-7751	1	CAP-FXD 0.01uF +-10% 50 V CER X7R	02010	06035C103KAT
C216	0160-7751	1	CAP-FXD 0.01uF +-10% 50 V CER X7R	02010	06035C103KAT
C217	0160-7798	1	CAP-FXD 0.1uF +-10% 50 V CER X7R	06352	C2012X7R1H104K
C218	0180-4287	1	CAP-FXD 10uF +-20% 35 V TA	02010	TAJD106M035
C219	0160-7781	1	CAP-FXD 2200pF +-10% 50 V CER X7R	02010	06035C222KAT
C220	0160-7798	1	CAP-FXD 0.1uF +-10% 50 V CER X7R	06352	C2012X7R1H104K
C221	0160-7781	1	CAP-FXD 2200pF +-10% 50 V CER X7R	02010	06035C222KAT

**Indicates factory-selected value*

Agilent Part Number E4401-60203
1.5 GHz RF (50 Ohm)

Reference Designator	Agilent Part Number	Qty	Description	Mgr Code	Mfr Part Number
C222	0160-7798	1	CAP-FXD 0.1uF +-10% 50 V CER X7R	06352	C2012X7R1H104K
C223	0160-7751	1	CAP-FXD 0.01uF +-10% 50 V CER X7R	02010	06035C103KAT
C224	0160-7751	1	CAP-FXD 0.01uF +-10% 50 V CER X7R	02010	06035C103KAT
C225	0160-7751	1	CAP-FXD 0.01uF +-10% 50 V CER X7R	02010	06035C103KAT
C226	0160-7798	1	CAP-FXD 0.1uF +-10% 50 V CER X7R	06352	C2012X7R1H104K
C227	0160-7751	1	CAP-FXD 0.01uF +-10% 50 V CER X7R	02010	06035C103KAT
C228	0160-7835	1	CAP-FXD 100pF +-5% 50 V CER C0G	02010	06035A101JAT
C229	0160-7835	1	CAP-FXD 100pF +-5% 50 V CER C0G	02010	06035A101JAT
C230	0160-7751	1	CAP-FXD 0.01uF +-10% 50 V CER X7R	02010	06035C103KAT
C231	0180-4287	1	CAP-FXD 10uF +-20% 35 V TA	02010	TAJD106M035
C232	0160-7798	1	CAP-FXD 0.1uF +-10% 50 V CER X7R	06352	C2012X7R1H104K
C233	0160-7751	1	CAP-FXD 0.01uF +-10% 50 V CER X7R	02010	06035C103KAT
C234	0160-7988	1	CAP-FXD 470pF +-5% 50 V CER C0G	06352	C1608COG1H471J
C235	0160-7988	1	CAP-FXD 470pF +-5% 50 V CER C0G	06352	C1608COG1H471J
C236	0160-7711	1	CAP-FXD 4700pF +-10% 50 V CER X7R	02010	06035C472KATRA
C237	0160-7798	1	CAP-FXD 0.1uF +-10% 50 V CER X7R	06352	C2012X7R1H104K
C238	0160-7751	1	CAP-FXD 0.01uF +-10% 50 V CER X7R	02010	06035C103KAT
C239	0160-7711	1	CAP-FXD 4700pF +-10% 50 V CER X7R	02010	06035C472KATRA
C240	0160-7988	1	CAP-FXD 470pF +-5% 50 V CER C0G	06352	C1608COG1H471J
C241	0160-7798	1	CAP-FXD 0.1uF +-10% 50 V CER X7R	06352	C2012X7R1H104K
C242	0160-7798	1	CAP-FXD 0.1uF +-10% 50 V CER X7R	06352	C2012X7R1H104K
C243	0160-7798	1	CAP-FXD 0.1uF +-10% 50 V CER X7R	06352	C2012X7R1H104K
C244	0160-7798	1	CAP-FXD 0.1uF +-10% 50 V CER X7R	06352	C2012X7R1H104K
C245	0160-7798	1	CAP-FXD 0.1uF +-10% 50 V CER X7R	06352	C2012X7R1H104K
C246	0160-7835	1	CAP-FXD 100pF +-5% 50 V CER C0G	02010	06035A101JAT
C247	0160-7798	1	CAP-FXD 0.1uF +-10% 50 V CER X7R	06352	C2012X7R1H104K
C248	0160-7809	1	CAP-FXD 0.015uF +-10% 50 V CER X7R	12340	C0603C153K5RAC
C249	0160-7748	1	CAP-FXD 1000pF +-10% 50 V CER X7R	02010	06035C102KAT
C250	0160-7835	1	CAP-FXD 100pF +-5% 50 V CER C0G	02010	06035A101JAT
C251	0160-7855	1	CAP-FXD 33pF +-5% 50 V CER C0G	02010	06035A330JAT

 **Indicates factory-selected value*

Agilent Part Number E4401-60203
1.5 GHz RF (50 Ohm)

Reference Designator	Agilent Part Number	Qty	Description	Mgr Code	Mfr Part Number
C252	0160-7855	1	CAP-FXD 33pF +-5% 50 V CER C0G	02010	06035A330JAT
C253	0160-7835	1	CAP-FXD 100pF +-5% 50 V CER C0G	02010	06035A101JAT
C254	0160-7835	1	CAP-FXD 100pF +-5% 50 V CER C0G	02010	06035A101JAT
C255	0180-4287	1	CAP-FXD 10uF +-20% 35 V TA	02010	TAJD106M035
C256	0160-7712	1	CAP-FXD 1500pF +-10% 50 V CER X7R	02010	06035C152KATRA
C257	0160-7858	1	CAP-FXD 390pF +-10% 50 V CER X7R	02010	06035C391KAT
C258	0160-7835	1	CAP-FXD 100pF +-5% 50 V CER C0G	02010	06035A101JAT
C259	0180-3751	1	CAP-FXD 1uF +-20% 35 V TA	02010	TAJB105M035
C260	0160-7712	1	CAP-FXD 1500pF +-10% 50 V CER X7R	02010	06035C152KATRA
C261	0160-7712	1	CAP-FXD 1500pF +-10% 50 V CER X7R	02010	06035C152KATRA
C262	0160-7712	1	CAP-FXD 1500pF +-10% 50 V CER X7R	02010	06035C152KATRA
C263	0160-7986	1	CAP-FXD 390pF +-5% 50 V CER C0G	06352	C1608COG1H391J
C264	0160-7986	1	CAP-FXD 390pF +-5% 50 V CER C0G	06352	C1608COG1H391J
C265	0160-7712	1	CAP-FXD 1500pF +-10% 50 V CER X7R	02010	06035C152KATRA
C266	0160-7858	1	CAP-FXD 390pF +-10% 50 V CER X7R	02010	06035C391KAT
C267	0160-7835	1	CAP-FXD 100pF +-5% 50 V CER C0G	02010	06035A101JAT
C268	0160-7835	1	CAP-FXD 100pF +-5% 50 V CER C0G	02010	06035A101JAT
C269	0160-7858	1	CAP-FXD 390pF +-10% 50 V CER X7R	02010	06035C391KAT
C270	0160-7858	1	CAP-FXD 390pF +-10% 50 V CER X7R	02010	06035C391KAT
C271	0160-7835	1	CAP-FXD 100pF +-5% 50 V CER C0G	02010	06035A101JAT
C272	0160-7835	1	CAP-FXD 100pF +-5% 50 V CER C0G	02010	06035A101JAT
C273	0180-4287	1	CAP-FXD 10uF +-20% 35 V TA	02010	TAJD106M035
C274	0160-7835	1	CAP-FXD 100pF +-5% 50 V CER C0G	02010	06035A101JAT
C275	0180-4287	1	CAP-FXD 10uF +-20% 35 V TA	02010	TAJD106M035
C276	0160-7986	1	CAP-FXD 390pF +-5% 50 V CER C0G	06352	C1608COG1H391J
C277	0160-7986	1	CAP-FXD 390pF +-5% 50 V CER C0G	06352	C1608COG1H391J
C278	0160-7986	1	CAP-FXD 390pF +-5% 50 V CER C0G	06352	C1608COG1H391J
C279	0160-7798	1	CAP-FXD 0.1uF +-10% 50 V CER X7R	06352	C2012X7R1H104K
C280	0160-7798	1	CAP-FXD 0.1uF +-10% 50 V CER X7R	06352	C2012X7R1H104K
C281	0160-7986	1	CAP-FXD 390pF +-5% 50 V CER C0G	06352	C1608COG1H391J

**Indicates factory-selected value*

Agilent Part Number E4401-60203
1.5 GHz RF (50 Ohm)

Reference Designator	Agilent Part Number	Qty	Description	Mgr Code	Mfr Part Number
C282	0160-7986	1	CAP-FXD 390pF +-5% 50 V CER C0G	06352	C1608COG1H391J
C283	0160-7986	1	CAP-FXD 390pF +-5% 50 V CER C0G	06352	C1608COG1H391J
C284	0160-7751	1	CAP-FXD 0.01uF +-10% 50 V CER X7R	02010	06035C103KAT
C285	0160-7751	1	CAP-FXD 0.01uF +-10% 50 V CER X7R	02010	06035C103KAT
C286	0160-7856	1	CAP-FXD 330pF +-10% 50 V CER X7R	02010	06035C331KAT
C287	0160-7751	1	CAP-FXD 0.01uF +-10% 50 V CER X7R	02010	06035C103KAT
C288	0160-7751	1	CAP-FXD 0.01uF +-10% 50 V CER X7R	02010	06035C103KAT
C289	0160-7798	1	CAP-FXD 0.1uF +-10% 50 V CER X7R	06352	C2012X7R1H104K
C290	0160-7751	1	CAP-FXD 0.01uF +-10% 50 V CER X7R	02010	06035C103KAT
C291	0160-7751	1	CAP-FXD 0.01uF +-10% 50 V CER X7R	02010	06035C103KAT
C292	0160-7798	1	CAP-FXD 0.1uF +-10% 50 V CER X7R	06352	C2012X7R1H104K
C293	0160-7751	1	CAP-FXD 0.01uF +-10% 50 V CER X7R	02010	06035C103KAT
C294	0160-7749	1	CAP-FXD 22pF +-5% 50 V CER C0G	02010	06035A220JAT
C295	0160-7748	1	CAP-FXD 1000pF +-10% 50 V CER X7R	02010	06035C102KAT
C296	0160-7751	1	CAP-FXD 0.01uF +-10% 50 V CER X7R	02010	06035C103KAT
C297	0160-7856	1	CAP-FXD 330pF +-10% 50 V CER X7R	02010	06035C331KAT
C298	0160-7856	1	CAP-FXD 330pF +-10% 50 V CER X7R	02010	06035C331KAT
C299	0180-3755	1	CAP-FXD 33uF +-20% 10 V TA	02010	TAJD336M010
C300	0160-7798	1	CAP-FXD 0.1uF +-10% 50 V CER X7R	06352	C2012X7R1H104K
C301	0160-7751	1	CAP-FXD 0.01uF +-10% 50 V CER X7R	02010	06035C103KAT
C302	0160-7798	1	CAP-FXD 0.1uF +-10% 50 V CER X7R	06352	C2012X7R1H104K
C303	0160-7751	1	CAP-FXD 0.01uF +-10% 50 V CER X7R	02010	06035C103KAT
C304	0180-3755	1	CAP-FXD 33uF +-20% 10 V TA	02010	TAJD336M010
C305	0160-7798	1	CAP-FXD 0.1uF +-10% 50 V CER X7R	06352	C2012X7R1H104K
C306	0160-7798	1	CAP-FXD 0.1uF +-10% 50 V CER X7R	06352	C2012X7R1H104K
C307	0160-7798	1	CAP-FXD 0.1uF +-10% 50 V CER X7R	06352	C2012X7R1H104K
C308	0160-7798	1	CAP-FXD 0.1uF +-10% 50 V CER X7R	06352	C2012X7R1H104K
C309	0160-7798	1	CAP-FXD 0.1uF +-10% 50 V CER X7R	06352	C2012X7R1H104K
C310	0160-7798	1	CAP-FXD 0.1uF +-10% 50 V CER X7R	06352	C2012X7R1H104K
C311	0160-7798	1	CAP-FXD 0.1uF +-10% 50 V CER X7R	06352	C2012X7R1H104K

 **Indicates factory-selected value*

Agilent Part Number E4401-60203
1.5 GHz RF (50 Ohm)

Reference Designator	Agilent Part Number	Qty	Description	Mgr Code	Mfr Part Number
C312	0160-7798	1	CAP-FXD 0.1uF +-10% 50 V CER X7R	06352	C2012X7R1H104K
C313	0160-7855	1	CAP-FXD 33pF +-5% 50 V CER C0G	02010	06035A330JAT
C314	0160-7855	1	CAP-FXD 33pF +-5% 50 V CER C0G	02010	06035A330JAT
C315	0160-7855	1	CAP-FXD 33pF +-5% 50 V CER C0G	02010	06035A330JAT
C316	0160-7855	1	CAP-FXD 33pF +-5% 50 V CER C0G	02010	06035A330JAT
C317	0160-7855	1	CAP-FXD 33pF +-5% 50 V CER C0G	02010	06035A330JAT
C318	0160-7855	1	CAP-FXD 33pF +-5% 50 V CER C0G	02010	06035A330JAT
C319	0160-7855	1	CAP-FXD 33pF +-5% 50 V CER C0G	02010	06035A330JAT
C320	0160-7855	1	CAP-FXD 33pF +-5% 50 V CER C0G	02010	06035A330JAT
C321	0160-7855	1	CAP-FXD 33pF +-5% 50 V CER C0G	02010	06035A330JAT
C322	0160-7855	1	CAP-FXD 33pF +-5% 50 V CER C0G	02010	06035A330JAT
C323	0160-7748	1	CAP-FXD 1000pF +-10% 50 V CER X7R	02010	06035C102KAT
C324	0160-7835	1	CAP-FXD 100pF +-5% 50 V CER C0G	02010	06035A101JAT
C325	0160-7835	1	CAP-FXD 100pF +-5% 50 V CER C0G	02010	06035A101JAT
C326	0160-7835	1	CAP-FXD 100pF +-5% 50 V CER C0G	02010	06035A101JAT
C327	0160-7835	1	CAP-FXD 100pF +-5% 50 V CER C0G	02010	06035A101JAT
C328	0160-7835	1	CAP-FXD 100pF +-5% 50 V CER C0G	02010	06035A101JAT
C329	0160-7835	1	CAP-FXD 100pF +-5% 50 V CER C0G	02010	06035A101JAT
C330	0180-3755	1	CAP-FXD 33uF +-20% 10 V TA	02010	TAJD336M010
C331	0160-7835	1	CAP-FXD 100pF +-5% 50 V CER C0G	02010	06035A101JAT
C332	0180-4287	1	CAP-FXD 10uF +-20% 35 V TA	02010	TAJD106M035
C333	0180-4287	1	CAP-FXD 10uF +-20% 35 V TA	02010	TAJD106M035
C334	0160-7835	1	CAP-FXD 100pF +-5% 50 V CER C0G	02010	06035A101JAT
C335	0160-7798	1	CAP-FXD 0.1uF +-10% 50 V CER X7R	06352	C2012X7R1H104K
C336	0180-4287	1	CAP-FXD 10uF +-20% 35 V TA	02010	TAJD106M035
C337	0160-7798	1	CAP-FXD 0.1uF +-10% 50 V CER X7R	06352	C2012X7R1H104K
C338	0160-7781	1	CAP-FXD 2200pF +-10% 50 V CER X7R	02010	06035C222KAT
C339	0160-7798	1	CAP-FXD 0.1uF +-10% 50 V CER X7R	06352	C2012X7R1H104K
C340	0160-7798	1	CAP-FXD 0.1uF +-10% 50 V CER X7R	06352	C2012X7R1H104K
C341	0160-7986	1	CAP-FXD 390pF +-5% 50 V CER C0G	06352	C1608COG1H391J

**Indicates factory-selected value*

Agilent Part Number E4401-60203
1.5 GHz RF (50 Ohm)

Reference Designator	Agilent Part Number	Qty	Description	Mgr Code	Mfr Part Number
C342	0160-7751	1	CAP-FXD 0.01uF +-10% 50 V CER X7R	02010	06035C103KAT
C343	0160-7986	1	CAP-FXD 390pF +-5% 50 V CER C0G	06352	C1608COG1H391J
C344	0160-7986	1	CAP-FXD 390pF +-5% 50 V CER C0G	06352	C1608COG1H391J
C345	0160-7798	1	CAP-FXD 0.1uF +-10% 50 V CER X7R	06352	C2012X7R1H104K
C346	0160-7986	1	CAP-FXD 390pF +-5% 50 V CER C0G	06352	C1608COG1H391J
C347	0160-7831	1	CAP-FXD 1.2pF +-20.83% 50 V CER C0G	02010	06035A1R2CAT
C348	0160-7986	1	CAP-FXD 390pF +-5% 50 V CER C0G	06352	C1608COG1H391J
C349	0160-7832	1	CAP-FXD 1.5pF +-16.67% 50 V CER C0G	02010	06035A1R5CAT
C350	0160-7834	1	CAP-FXD 10pF +-5% 50 V CER C0G	02010	06035A100JAT
C351	0160-7986	1	CAP-FXD 390pF +-5% 50 V CER C0G	06352	C1608COG1H391J
C352	0160-7834	1	CAP-FXD 10pF +-5% 50 V CER C0G	02010	06035A100JAT
C353	0160-7986	1	CAP-FXD 390pF +-5% 50 V CER C0G	06352	C1608COG1H391J
C354	0160-7986	1	CAP-FXD 390pF +-5% 50 V CER C0G	06352	C1608COG1H391J
C355	0160-7751	1	CAP-FXD 0.01uF +-10% 50 V CER X7R	02010	06035C103KAT
C356	0160-7986	1	CAP-FXD 390pF +-5% 50 V CER C0G	06352	C1608COG1H391J
C357	0160-7751	1	CAP-FXD 0.01uF +-10% 50 V CER X7R	02010	06035C103KAT
C358	0160-7986	1	CAP-FXD 390pF +-5% 50 V CER C0G	06352	C1608COG1H391J
C359	0180-4287	1	CAP-FXD 10uF +-20% 35 V TA	02010	TAJD106M035
C360	0160-7798	1	CAP-FXD 0.1uF +-10% 50 V CER X7R	06352	C2012X7R1H104K
C361	0160-7986	1	CAP-FXD 390pF +-5% 50 V CER C0G	06352	C1608COG1H391J
C362	0160-7831	1	CAP-FXD 1.2pF +-20.83% 50 V CER C0G	02010	06035A1R2CAT
C363	0160-7986	1	CAP-FXD 390pF +-5% 50 V CER C0G	06352	C1608COG1H391J
C364	0160-7834	1	CAP-FXD 10pF +-5% 50 V CER C0G	02010	06035A100JAT
C365	0160-7798	1	CAP-FXD 0.1uF +-10% 50 V CER X7R	06352	C2012X7R1H104K
C366	0160-7986	1	CAP-FXD 390pF +-5% 50 V CER C0G	06352	C1608COG1H391J
C367	0160-7834	1	CAP-FXD 10pF +-5% 50 V CER C0G	02010	06035A100JAT
C368	0160-7986	1	CAP-FXD 390pF +-5% 50 V CER C0G	06352	C1608COG1H391J
C369	0160-7986	1	CAP-FXD 390pF +-5% 50 V CER C0G	06352	C1608COG1H391J
C370	0160-7751	1	CAP-FXD 0.01uF +-10% 50 V CER X7R	02010	06035C103KAT
C371	0160-7986	1	CAP-FXD 390pF +-5% 50 V CER C0G	06352	C1608COG1H391J

 **Indicates factory-selected value*

Agilent Part Number E4401-60203
1.5 GHz RF (50 Ohm)

Reference Designator	Agilent Part Number	Qty	Description	Mgr Code	Mfr Part Number
C372	0160-7986	1	CAP-FXD 390pF +-5% 50 V CER C0G	06352	C1608COG1H391J
C373	0160-7798	1	CAP-FXD 0.1uF +-10% 50 V CER X7R	06352	C2012X7R1H104K
C374	0160-7986	1	CAP-FXD 390pF +-5% 50 V CER C0G	06352	C1608COG1H391J
C375	0160-7831	1	CAP-FXD 1.2pF +-20.83% 50 V CER C0G	02010	06035A1R2CAT
C376	0160-7986	1	CAP-FXD 390pF +-5% 50 V CER C0G	06352	C1608COG1H391J
C378	0160-7834	1	CAP-FXD 10pF +-5% 50 V CER C0G	02010	06035A100JAT
C379	0160-7986	1	CAP-FXD 390pF +-5% 50 V CER C0G	06352	C1608COG1H391J
C380	0160-7834	1	CAP-FXD 10pF +-5% 50 V CER C0G	02010	06035A100JAT
C381	0160-7986	1	CAP-FXD 390pF +-5% 50 V CER C0G	06352	C1608COG1H391J
C382	0160-7986	1	CAP-FXD 390pF +-5% 50 V CER C0G	06352	C1608COG1H391J
C383	0160-7834	1	CAP-FXD 10pF +-5% 50 V CER C0G	02010	06035A100JAT
C384	0160-7751	1	CAP-FXD 0.01uF +-10% 50 V CER X7R	02010	06035C103KAT
C385	0160-7798	1	CAP-FXD 0.1uF +-10% 50 V CER X7R	06352	C2012X7R1H104K
C386	0160-7798	1	CAP-FXD 0.1uF +-10% 50 V CER X7R	06352	C2012X7R1H104K
C387	0160-7986	1	CAP-FXD 390pF +-5% 50 V CER C0G	06352	C1608COG1H391J
C388	0160-7860	1	CAP-FXD 4.7pF +-5.31% 50 V CER C0G	02010	06035A4R7CAT
C389	0180-4287	1	CAP-FXD 10uF +-20% 35 V TA	02010	TAJD106M035
C390	0160-7834	1	CAP-FXD 10pF +-5% 50 V CER C0G	02010	06035A100JAT
C391	0180-4287	1	CAP-FXD 10uF +-20% 35 V TA	02010	TAJD106M035
C392	0160-7835	1	CAP-FXD 100pF +-5% 50 V CER C0G	02010	06035A101JAT
C393	0180-3751	1	CAP-FXD 1uF +-20% 35 V TA	02010	TAJB105M035
C394	0160-7867	1	CAP-FXD 6.8pF +-3.68% 50 V CER C0G	02010	06035A6R8CAT
C395	0160-7867	1	CAP-FXD 6.8pF +-3.68% 50 V CER C0G	02010	06035A6R8CAT
C396	0160-8216	1	CAP-FXD 8.2pF 50 V MOS	02010	08055J8R2CAW
C397	0160-7712	1	CAP-FXD 1500pF +-10% 50 V CER X7R	02010	06035C152KATRA
C398	0160-7835	1	CAP-FXD 100pF +-5% 50 V CER C0G	02010	06035A101JAT
C399	0160-7986	1	CAP-FXD 390pF +-5% 50 V CER C0G	06352	C1608COG1H391J
C400	0160-7986	1	CAP-FXD 390pF +-5% 50 V CER C0G	06352	C1608COG1H391J
C401	0160-7712	1	CAP-FXD 1500pF +-10% 50 V CER X7R	02010	06035C152KATRA
C402	0160-7835	1	CAP-FXD 100pF +-5% 50 V CER C0G	02010	06035A101JAT

Agilent Part Number E4401-60203
1.5 GHz RF (50 Ohm)

Reference Designator	Agilent Part Number	Qty	Description	Mgr Code	Mfr Part Number
C403	0160-7835	1	CAP-FXD 100pF +-5% 50 V CER C0G	02010	06035A101JAT
C404	0160-7835	1	CAP-FXD 100pF +-5% 50 V CER C0G	02010	06035A101JAT
C405	0160-7986	1	CAP-FXD 390pF +-5% 50 V CER C0G	06352	C1608COG1H391J
C406	0160-7986	1	CAP-FXD 390pF +-5% 50 V CER C0G	06352	C1608COG1H391J
C407	0180-4287	1	CAP-FXD 10uF +-20% 35 V TA	02010	TAJD106M035
C408	0160-7835	1	CAP-FXD 100pF +-5% 50 V CER C0G	02010	06035A101JAT
C409	0180-4287	1	CAP-FXD 10uF +-20% 35 V TA	02010	TAJD106M035
C410	0160-7986	1	CAP-FXD 390pF +-5% 50 V CER C0G	06352	C1608COG1H391J
C411	0160-7986	1	CAP-FXD 390pF +-5% 50 V CER C0G	06352	C1608COG1H391J
C412	0160-7986	1	CAP-FXD 390pF +-5% 50 V CER C0G	06352	C1608COG1H391J
C413	0160-7798	1	CAP-FXD 0.1uF +-10% 50 V CER X7R	06352	C2012X7R1H104K
C414	0160-7798	1	CAP-FXD 0.1uF +-10% 50 V CER X7R	06352	C2012X7R1H104K
C415	0160-7986	1	CAP-FXD 390pF +-5% 50 V CER C0G	06352	C1608COG1H391J
C416	0160-7986	1	CAP-FXD 390pF +-5% 50 V CER C0G	06352	C1608COG1H391J
C417	0160-7986	1	CAP-FXD 390pF +-5% 50 V CER C0G	06352	C1608COG1H391J
C418	0160-7986	1	CAP-FXD 390pF +-5% 50 V CER C0G	06352	C1608COG1H391J
C419	0160-7835	1	CAP-FXD 100pF +-5% 50 V CER C0G	02010	06035A101JAT
C420	0160-7751	1	CAP-FXD 0.01uF +-10% 50 V CER X7R	02010	06035C103KAT
C421	0160-7835	1	CAP-FXD 100pF +-5% 50 V CER C0G	02010	06035A101JAT
C422	0160-6104	1	CAP-FXD 2200pF +-5% 50 V CER C0G	02010	12065A222JATRA
C423	0160-7751	1	CAP-FXD 0.01uF +-10% 50 V CER X7R	02010	06035C103KAT
C424	0160-6104	1	CAP-FXD 2200pF +-5% 50 V CER C0G	02010	12065A222JATRA
C425	0160-7861	1	CAP-FXD 47pF +-5% 50 V CER C0G	02010	06035A470JAT
C426	0160-7798	1	CAP-FXD 0.1uF +-10% 50 V CER X7R	06352	C2012X7R1H104K
C427	0160-7798	1	CAP-FXD 0.1uF +-10% 50 V CER X7R	06352	C2012X7R1H104K
C428	0160-7861	1	CAP-FXD 47pF +-5% 50 V CER C0G	02010	06035A470JAT
C429	0160-7798	1	CAP-FXD 0.1uF +-10% 50 V CER X7R	06352	C2012X7R1H104K
C430	0160-7798	1	CAP-FXD 0.1uF +-10% 50 V CER X7R	06352	C2012X7R1H104K
C431	0160-7798	1	CAP-FXD 0.1uF +-10% 50 V CER X7R	06352	C2012X7R1H104K
C432	0160-7798	1	CAP-FXD 0.1uF +-10% 50 V CER X7R	06352	C2012X7R1H104K

 **Indicates factory-selected value*

Agilent Part Number E4401-60203
1.5 GHz RF (50 Ohm)

Reference Designator	Agilent Part Number	Qty	Description	Mgr Code	Mfr Part Number
C433	0160-7798	1	CAP-FXD 0.1uF +-10% 50 V CER X7R	06352	C2012X7R1H104K
C434	0160-7798	1	CAP-FXD 0.1uF +-10% 50 V CER X7R	06352	C2012X7R1H104K
C435	0160-7835	1	CAP-FXD 100pF +-5% 50 V CER C0G	02010	06035A101JAT
C436	0160-7835	1	CAP-FXD 100pF +-5% 50 V CER C0G	02010	06035A101JAT
C437	0160-7986	1	CAP-FXD 390pF +-5% 50 V CER C0G	06352	C1608COG1H391J
C438	0160-7798	1	CAP-FXD 0.1uF +-10% 50 V CER X7R	06352	C2012X7R1H104K
C439	0160-7835	1	CAP-FXD 100pF +-5% 50 V CER C0G	02010	06035A101JAT
C440	0160-7751	1	CAP-FXD 0.01uF +-10% 50 V CER X7R	02010	06035C103KAT
C441	0160-7798	1	CAP-FXD 0.1uF +-10% 50 V CER X7R	06352	C2012X7R1H104K
C442	0160-7835	1	CAP-FXD 100pF +-5% 50 V CER C0G	02010	06035A101JAT
C443	0160-7835	1	CAP-FXD 100pF +-5% 50 V CER C0G	02010	06035A101JAT
C444	0160-7798	1	CAP-FXD 0.1uF +-10% 50 V CER X7R	06352	C2012X7R1H104K
C445	0160-7835	1	CAP-FXD 100pF +-5% 50 V CER C0G	02010	06035A101JAT
C446	0160-7835	1	CAP-FXD 100pF +-5% 50 V CER C0G	02010	06035A101JAT
C447	0160-7751	1	CAP-FXD 0.01uF +-10% 50 V CER X7R	02010	06035C103KAT
C448	0160-7985	1	CAP-FXD 360pF +-5% 50 V CER C0G	12340	C0603C361J5GAC
C449	0160-7798	1	CAP-FXD 0.1uF +-10% 50 V CER X7R	06352	C2012X7R1H104K
C450	0160-7835	1	CAP-FXD 100pF +-5% 50 V CER C0G	02010	06035A101JAT
C451	0160-7835	1	CAP-FXD 100pF +-5% 50 V CER C0G	02010	06035A101JAT
C452	0160-7855	1	CAP-FXD 33pF +-5% 50 V CER C0G	02010	06035A330JAT
C453	0160-7798	1	CAP-FXD 0.1uF +-10% 50 V CER X7R	06352	C2012X7R1H104K
C454	0160-7986	1	CAP-FXD 390pF +-5% 50 V CER C0G	06352	C1608COG1H391J
C455	0180-4287	1	CAP-FXD 10uF +-20% 35 V TA	02010	TAJD106M035
C456	0160-7798	1	CAP-FXD 0.1uF +-10% 50 V CER X7R	06352	C2012X7R1H104K
C457	0180-4287	1	CAP-FXD 10uF +-20% 35 V TA	02010	TAJD106M035
C458	0160-7798	1	CAP-FXD 0.1uF +-10% 50 V CER X7R	06352	C2012X7R1H104K
C459	0180-4287	1	CAP-FXD 10uF +-20% 35 V TA	02010	TAJD106M035
C460	0160-7751	1	CAP-FXD 0.01uF +-10% 50 V CER X7R	02010	06035C103KAT
C461	0180-4287	1	CAP-FXD 10uF +-20% 35 V TA	02010	TAJD106M035
C462	0160-7798	1	CAP-FXD 0.1uF +-10% 50 V CER X7R	06352	C2012X7R1H104K

Agilent Part Number E4401-60203
1.5 GHz RF (50 Ohm)

Reference Designator	Agilent Part Number	Qty	Description	Mgr Code	Mfr Part Number
C463	0160-7781	1	CAP-FXD 2200pF +-10% 50 V CER X7R	02010	06035C222KAT
C464	0160-7798	1	CAP-FXD 0.1uF +-10% 50 V CER X7R	06352	C2012X7R1H104K
C465	0160-7798	1	CAP-FXD 0.1uF +-10% 50 V CER X7R	06352	C2012X7R1H104K
C466	0160-7835	1	CAP-FXD 100pF +-5% 50 V CER C0G	02010	06035A101JAT
C467	0160-7835	1	CAP-FXD 100pF +-5% 50 V CER C0G	02010	06035A101JAT
C468	0160-7749	1	CAP-FXD 22pF +-5% 50 V CER C0G	02010	06035A220JAT
C469	0160-7751	1	CAP-FXD 0.01uF +-10% 50 V CER X7R	02010	06035C103KAT
C470	0160-7748	1	CAP-FXD 1000pF +-10% 50 V CER X7R	02010	06035C102KAT
C471	0160-7748	1	CAP-FXD 1000pF +-10% 50 V CER X7R	02010	06035C102KAT
C472	0160-7748	1	CAP-FXD 1000pF +-10% 50 V CER X7R	02010	06035C102KAT
C473	0160-7751	1	CAP-FXD 0.01uF +-10% 50 V CER X7R	02010	06035C103KAT
C474	0160-7835	1	CAP-FXD 100pF +-5% 50 V CER C0G	02010	06035A101JAT
C475	0160-7835	1	CAP-FXD 100pF +-5% 50 V CER C0G	02010	06035A101JAT
C476	0160-7835	1	CAP-FXD 100pF +-5% 50 V CER C0G	02010	06035A101JAT
C477	0160-7835	1	CAP-FXD 100pF +-5% 50 V CER C0G	02010	06035A101JAT
C478	0160-7751	1	CAP-FXD 0.01uF +-10% 50 V CER X7R	02010	06035C103KAT
C479	0160-7853	1	CAP-FXD 3.3pF +-7.6% 50 V CER C0G	02010	06035A3R3CAT
C480	0160-7751	1	CAP-FXD 0.01uF +-10% 50 V CER X7R	02010	06035C103KAT
C481	0160-7835	1	CAP-FXD 100pF +-5% 50 V CER C0G	02010	06035A101JAT
C482	0160-7835	1	CAP-FXD 100pF +-5% 50 V CER C0G	02010	06035A101JAT
C483	0160-7835	1	CAP-FXD 100pF +-5% 50 V CER C0G	02010	06035A101JAT
C484	0160-7751	1	CAP-FXD 0.01uF +-10% 50 V CER X7R	02010	06035C103KAT
C485	0160-7751	1	CAP-FXD 0.01uF +-10% 50 V CER X7R	02010	06035C103KAT
C486	0160-7751	1	CAP-FXD 0.01uF +-10% 50 V CER X7R	02010	06035C103KAT
C487	0160-7751	1	CAP-FXD 0.01uF +-10% 50 V CER X7R	02010	06035C103KAT
C488	0160-7751	1	CAP-FXD 0.01uF +-10% 50 V CER X7R	02010	06035C103KAT
C489	0160-7751	1	CAP-FXD 0.01uF +-10% 50 V CER X7R	02010	06035C103KAT
C490	0160-7751	1	CAP-FXD 0.01uF +-10% 50 V CER X7R	02010	06035C103KAT
C491	0180-4228	1	CAP-FXD 47uF +-20% 10 V TA	02010	TAJD476M010
C492	0160-7405	1	CAP-FXD 560pF +-5% 50 V CER C0G	06352	C2012C0G1H561J

 **Indicates factory-selected value*

Agilent Part Number E4401-60203
1.5 GHz RF (50 Ohm)

Reference Designator	Agilent Part Number	Qty	Description	Mgr Code	Mfr Part Number
C493	0160-7873	1	CAP-FXD 820pF +-10% 50 V CER X7R	02010	06035C821KAT
C494	0160-7873	1	CAP-FXD 820pF +-10% 50 V CER X7R	02010	06035C821KAT
C495	0160-7842	1	CAP-FXD 150pF +-5% 50 V CER C0G	02010	06035A151JAT
C496	0160-7899	1	CAP-FXD 0.047uF +-10% 16 V CER X7R	06352	C1608X7R1C473K
C497	0160-7864	1	CAP-FXD 56pF +-5% 50 V CER C0G	02010	06035A560JAT
C498	0160-7987	1	CAP-FXD 430pF +-5% 50 V CER C0G	06352	C1608COG1H431J
C499	0160-7988	1	CAP-FXD 470pF +-5% 50 V CER C0G	06352	C1608COG1H471J
C500	0160-7988	1	CAP-FXD 470pF +-5% 50 V CER C0G	06352	C1608COG1H471J
C501	0160-7708	1	CAP-FXD 1000pF +-5% 50 V CER C0G	02010	08055A102JATRA
C502	0160-7766	1	CAP-FXD 820pF +-5% 50 V CER C0G	06352	C2012C0G1H821JT
C503	0160-7766	1	CAP-FXD 820pF +-5% 50 V CER C0G	06352	C2012C0G1H821JT
C504	0160-7798	1	CAP-FXD 0.1uF +-10% 50 V CER X7R	06352	C2012X7R1H104K
C505	0160-7798	1	CAP-FXD 0.1uF +-10% 50 V CER X7R	06352	C2012X7R1H104K
C506	0160-7798	1	CAP-FXD 0.1uF +-10% 50 V CER X7R	06352	C2012X7R1H104K
C507	0160-7798	1	CAP-FXD 0.1uF +-10% 50 V CER X7R	06352	C2012X7R1H104K
C508	0160-7798	1	CAP-FXD 0.1uF +-10% 50 V CER X7R	06352	C2012X7R1H104K
C509	0160-7798	1	CAP-FXD 0.1uF +-10% 50 V CER X7R	06352	C2012X7R1H104K
C510	0160-7798	1	CAP-FXD 0.1uF +-10% 50 V CER X7R	06352	C2012X7R1H104K
C511	0160-7798	1	CAP-FXD 0.1uF +-10% 50 V CER X7R	06352	C2012X7R1H104K
C512	0160-7798	1	CAP-FXD 0.1uF +-10% 50 V CER X7R	06352	C2012X7R1H104K
C513	0160-7798	1	CAP-FXD 0.1uF +-10% 50 V CER X7R	06352	C2012X7R1H104K
C514	0160-7798	1	CAP-FXD 0.1uF +-10% 50 V CER X7R	06352	C2012X7R1H104K
C515	0160-7798	1	CAP-FXD 0.1uF +-10% 50 V CER X7R	06352	C2012X7R1H104K
C516	0160-7986	1	CAP-FXD 390pF +-5% 50 V CER C0G	06352	C1608COG1H391J
C517	0160-7855	1	CAP-FXD 33pF +-5% 50 V CER C0G	02010	06035A330JAT
C518	0160-7855	1	CAP-FXD 33pF +-5% 50 V CER C0G	02010	06035A330JAT
C519	0160-7855	1	CAP-FXD 33pF +-5% 50 V CER C0G	02010	06035A330JAT
C520	0160-7751	1	CAP-FXD 0.01uF +-10% 50 V CER X7R	02010	06035C103KAT
C521	0160-7751	1	CAP-FXD 0.01uF +-10% 50 V CER X7R	02010	06035C103KAT
C522	0160-7835	1	CAP-FXD 100pF +-5% 50 V CER C0G	02010	06035A101JAT

Agilent Part Number E4401-60203
1.5 GHz RF (50 Ohm)

Reference Designator	Agilent Part Number	Qty	Description	Mgr Code	Mfr Part Number
C523	0160-7835	1	CAP-FXD 100pF +-5% 50 V CER C0G	02010	06035A101JAT
C524	0160-7835	1	CAP-FXD 100pF +-5% 50 V CER C0G	02010	06035A101JAT
C525	0160-7835	1	CAP-FXD 100pF +-5% 50 V CER C0G	02010	06035A101JAT
C526	0160-7835	1	CAP-FXD 100pF +-5% 50 V CER C0G	02010	06035A101JAT
C527	0160-7835	1	CAP-FXD 100pF +-5% 50 V CER C0G	02010	06035A101JAT
C528	0160-7798	1	CAP-FXD 0.1uF +-10% 50 V CER X7R	06352	C2012X7R1H104K
C529	0160-7835	1	CAP-FXD 100pF +-5% 50 V CER C0G	02010	06035A101JAT
C530	0160-7832	1	CAP-FXD 1.5pF +-16.67% 50 V CER C0G	02010	06035A1R5CAT
C531	0160-7798	1	CAP-FXD 0.1uF +-10% 50 V CER X7R	06352	C2012X7R1H104K
C532	0160-7798	1	CAP-FXD 0.1uF +-10% 50 V CER X7R	06352	C2012X7R1H104K
C537	0160-7835	1	CAP-FXD 100pF +-5% 50 V CER C0G	02010	06035A101JAT
C538	0160-7835	1	CAP-FXD 100pF +-5% 50 V CER C0G	02010	06035A101JAT
C539	0160-7835	1	CAP-FXD 100pF +-5% 50 V CER C0G	02010	06035A101JAT
C540	0160-7835	1	CAP-FXD 100pF +-5% 50 V CER C0G	02010	06035A101JAT
C541	0160-7835	1	CAP-FXD 100pF +-5% 50 V CER C0G	02010	06035A101JAT
C542	0160-7830	1	CAP-FXD 1pF +-25% 50 V CER C0G	12340	C0603C109C5GAC
C543	0160-7830	1	CAP-FXD 1pF +-25% 50 V CER C0G	12340	C0603C109C5GAC
CR1	1900-0264	1	DIODE-SCHOTTKY SM SIG	20057	HSMS-2822
CR2	1900-0273	1	DIODE-PIN	01542	HSMP-3892-BLK
CR3	1900-0273	1	DIODE-PIN	01542	HSMP-3892-BLK
CR4	1900-0273	1	DIODE-PIN	01542	HSMP-3892-BLK
CR5	1902-1543	1	DIODE-ZNR 3.6V 5% TO-236 (SOT-23)	02910	BZX84C3V6
CR6	1900-0264	1	DIODE-SCHOTTKY SM SIG	20057	HSMS-2822
CR7	1902-1543	1	DIODE-ZNR 3.6V 5% TO-236 (SOT-23)	02910	BZX84C3V6
CR8	0122-0175	1	DIODE-VVC 1.8PF 10% C 1/C28-TYP9.7	02910	BBY31
CR9	0122-0175	1	DIODE-VVC 1.8PF 10% C 1/C28-TYP9.7	02910	BBY31
CR10	1900-0308	1	DIODE-PIN	01542	HSMP-4810
CR11	1901-1227	1	DIODE-SWITCHING 75V 200MA 6NS TO-236	02910	BAS16
CR12	1902-1646	1	DIODE-ZNR 9.1V PD.225W IR500NA	36633	BZX84C9V1LT1
CR15	1900-0308	1	DIODE-PIN	01542	HSMP-4810

 **Indicates factory-selected value*

Agilent Part Number E4401-60203
1.5 GHz RF (50 Ohm)

Reference Designator	Agilent Part Number	Qty	Description	Mgr Code	Mfr Part Number
CR16	1902-1543	1	DIODE-ZNR 3.6V 5% TO-236 (SOT-23)	02910	BZX84C3V6
CR17	1902-1543	1	DIODE-ZNR 3.6V 5% TO-236 (SOT-23)	02910	BZX84C3V6
CR21	1900-0270	1	DIODE-PIN	01542	HSMP-3822
CR22	1900-0270	1	DIODE-PIN	01542	HSMP-3822
CR23	1900-0270	1	DIODE-PIN	01542	HSMP-3822
CR24	1900-0072	1	DIODE-SCHOTTKY SM SIG	37793	HSMS-2820
CR25	0122-0172	1	DIODE-VVC 29PF 10% C 3/C25-MIN5	02910	BBY40
CR26	0122-0172	1	DIODE-VVC 29PF 10% C 3/C25-MIN5	02910	BBY40
CR27	1906-0291	1	DIODE-DUAL 70V 100MA T0-236AA	02910	BAV99
CR28	1906-0291	1	DIODE-DUAL 70V 100MA T0-236AA	02910	BAV99
CR30	1906-0291	1	DIODE-DUAL 70V 100MA T0-236AA	02910	BAV99
CR32	1990-1267	1	LED-LAMP LUM-INT8MCD IF30MA-MAX	14139	AM23ID-F
CR33	1990-1267	1	LED-LAMP LUM-INT8MCD IF30MA-MAX	14139	AM23ID-F
CR34	0122-0345	1	DIODE-VVC 2.1PF 10% C 1/C28-MIN8.2	36393	BB535
CR35	0122-0345	1	DIODE-VVC 2.1PF 10% C 1/C28-MIN8.2	36393	BB535
CR36	0122-0345	1	DIODE-VVC 2.1PF 10% C 1/C28-MIN8.2	36393	BB535
CR37	0122-0345	1	DIODE-VVC 2.1PF 10% C 1/C28-MIN8.2	36393	BB535
CR38	0122-0345	1	DIODE-VVC 2.1PF 10% C 1/C28-MIN8.2	36393	BB535
CR39	0122-0345	1	DIODE-VVC 2.1PF 10% C 1/C28-MIN8.2	36393	BB535
CR40	0122-0345	1	DIODE-VVC 2.1PF 10% C 1/C28-MIN8.2	36393	BB535
CR41	0122-0345	1	DIODE-VVC 2.1PF 10% C 1/C28-MIN8.2	36393	BB535
CR42	1900-0273	1	DIODE-PIN	01542	HSMP-3892-BLK
CR43	1901-1227	1	DIODE-SWITCHING 75V 200MA 6NS TO-236	02910	BAS16
CR44	1900-0309	1	DIODE-SCHOTTKY SM SIG	01542	HSMS-2827
CR45	1901-1227	1	DIODE-SWITCHING 75V 200MA 6NS TO-236	02910	BAS16
CR46	1900-0273	1	DIODE-PIN	01542	HSMP-3892-BLK
CR47	1902-1592	1	DIODE-ZNR 5.1V 5% TO-236 (SOT-23)	02910	BZX84C5V1
CR48	1900-0273	1	DIODE-PIN	01542	HSMP-3892-BLK
CR49	1901-1227	1	DIODE-SWITCHING 75V 200MA 6NS TO-236	02910	BAS16
CR50	1902-1544	1	DIODE-ZNR 10V 5% TO-236 (SOT-23) PD.35W	02910	BZX84C10

**Indicates factory-selected value*

Agilent Part Number E4401-60203
1.5 GHz RF (50 Ohm)

Reference Designator	Agilent Part Number	Qty	Description	Mgr Code	Mfr Part Number
CR51	1900-0309	1	DIODE-SCHOTTKY SM SIG	01542	HSMS-2827
CR52	1901-1227	1	DIODE-SWITCHING 75V 200MA 6NS TO-236	02910	BAS16
CR53	1900-0273	1	DIODE-PIN	01542	HSMP-3892-BLK
CR54	1900-0273	1	DIODE-PIN	01542	HSMP-3892-BLK
CR55	1900-0309	1	DIODE-SCHOTTKY SM SIG	01542	HSMS-2827
CR56	1901-1227	1	DIODE-SWITCHING 75V 200MA 6NS TO-236	02910	BAS16
CR57	1900-0273	1	DIODE-PIN	01542	HSMP-3892-BLK
CR58	1902-1592	1	DIODE-ZNR 5.1V 5% TO-236 (SOT-23)	02910	BZX84C5V1
CR59	1902-1544	1	DIODE-ZNR 10V 5% TO-236 (SOT-23) PD.35W	02910	BZX84C10
CR60	0122-0345	1	DIODE-VVC 2.1PF 10% C 1/C28-MIN8.2	36393	BB535
CR61	0122-0345	1	DIODE-VVC 2.1PF 10% C 1/C28-MIN8.2	36393	BB535
CR62	1901-1227	1	DIODE-SWITCHING 75V 200MA 6NS TO-236	02910	BAS16
CR63	1900-0309	1	DIODE-SCHOTTKY SM SIG	01542	HSMS-2827
CR64	1901-1227	1	DIODE-SWITCHING 75V 200MA 6NS TO-236	02910	BAS16
CR65	1901-1227	1	DIODE-SWITCHING 75V 200MA 6NS TO-236	02910	BAS16
E1	9170-1421	1	CORE-SHIELDING BEAD	06352	HF50ACB-322513
E2	9170-1421	1	CORE-SHIELDING BEAD	06352	HF50ACB-322513
E3	9170-1584	1	CORE-SHIELDING BEAD	06352	MMZ2012Y102B
E4	9170-1584	1	CORE-SHIELDING BEAD	06352	MMZ2012Y102B
E5	9170-1584	1	CORE-SHIELDING BEAD	06352	MMZ2012Y102B
E6	9170-1421	1	CORE-SHIELDING BEAD	06352	HF50ACB-322513
E7	9170-1421	1	CORE-SHIELDING BEAD	06352	HF50ACB-322513
FL1	9135-0461	1	FILTER-SUPPRESSION EMI; SMT; WORKING	09939	NFM61R10T102M00-621
FL2	9135-0461	1	FILTER-SUPPRESSION EMI; SMT; WORKING	09939	NFM61R10T102M00-621
FL3	9135-0461	1	FILTER-SUPPRESSION EMI; SMT; WORKING	09939	NFM61R10T102M00-621
FL4	9135-0461	1	FILTER-SUPPRESSION EMI; SMT; WORKING	09939	NFM61R10T102M00-621
FL5	9135-0461	1	FILTER-SUPPRESSION EMI; SMT; WORKING	09939	NFM61R10T102M00-621

 **Indicates factory-selected value*

Agilent Part Number E4401-60203
1.5 GHz RF (50 Ohm)

Reference Designator	Agilent Part Number	Qty	Description	Mgr Code	Mfr Part Number
FL6	9135-0461	1	FILTER-SUPPRESSION EMI; SMT; WORKING	09939	NFM61R10T102M00-621
FL7	9135-0461	1	FILTER-SUPPRESSION EMI; SMT; WORKING	09939	NFM61R10T102M00-621
FL8	9135-0461	1	FILTER-SUPPRESSION EMI; SMT; WORKING	09939	NFM61R10T102M00-621
FL9	9135-0461	1	FILTER-SUPPRESSION EMI; SMT; WORKING	09939	NFM61R10T102M00-621
FL10	9135-0461	1	FILTER-SUPPRESSION EMI; SMT; WORKING	09939	NFM61R10T102M00-621
FL11	9135-0461	1	FILTER-SUPPRESSION EMI; SMT; WORKING	09939	NFM61R10T102M00-621
FL12	9135-0461	1	FILTER-SUPPRESSION EMI; SMT; WORKING	09939	NFM61R10T102M00-621
FL13	9135-0461	1	FILTER-SUPPRESSION EMI; SMT; WORKING	09939	NFM61R10T102M00-621
FL14	9135-0461	1	FILTER-SUPPRESSION EMI; SMT; WORKING	09939	NFM61R10T102M00-621
FL15	9135-0461	1	FILTER-SUPPRESSION EMI; SMT; WORKING	09939	NFM61R10T102M00-621
FL16	9135-0461	1	FILTER-SUPPRESSION EMI; SMT; WORKING	09939	NFM61R10T102M00-621
FL17	9135-0461	1	FILTER-SUPPRESSION EMI; SMT; WORKING	09939	NFM61R10T102M00-621
FL18	9135-0461	1	FILTER-SUPPRESSION EMI; SMT; WORKING	09939	NFM61R10T102M00-621
FL19	9135-0461	1	FILTER-SUPPRESSION EMI; SMT; WORKING	09939	NFM61R10T102M00-621
FL20	9135-0461	1	FILTER-SUPPRESSION EMI; SMT; WORKING	09939	NFM61R10T102M00-621
FL21	9135-0461	1	FILTER-SUPPRESSION EMI; SMT; WORKING	09939	NFM61R10T102M00-621
FL22	9135-0461	1	FILTER-SUPPRESSION EMI; SMT; WORKING	09939	NFM61R10T102M00-621
FL23	9135-0461	1	FILTER-SUPPRESSION EMI; SMT; WORKING	09939	NFM61R10T102M00-621
FL24	9135-0461	1	FILTER-SUPPRESSION EMI; SMT; WORKING	09939	NFM61R10T102M00-621

Agilent Part Number E4401-60203
1.5 GHz RF (50 Ohm)

Reference Designator	Agilent Part Number	Qty	Description	Mgr Code	Mfr Part Number
FL25	9135-0461	1	FILTER-SUPPRESSION EMI; SMT; WORKING	09939	NFM61R10T102M00-621
FL26	9135-0461	1	FILTER-SUPPRESSION EMI; SMT; WORKING	09939	NFM61R10T102M00-621
FL27	9135-0461	1	FILTER-SUPPRESSION EMI; SMT; WORKING	09939	NFM61R10T102M00-621
FL28	9135-0461	1	FILTER-SUPPRESSION EMI; SMT; WORKING	09939	NFM61R10T102M00-621
FL29	9135-0461	1	FILTER-SUPPRESSION EMI; SMT; WORKING	09939	NFM61R10T102M00-621
FL30	9135-0461	1	FILTER-SUPPRESSION EMI; SMT; WORKING	09939	NFM61R10T102M00-621
FL31	9135-0461	1	FILTER-SUPPRESSION EMI; SMT; WORKING	09939	NFM61R10T102M00-621
J1	1252-7020	1	CONN-RECT MICRORBN 40-CKT 40-CONT	01380	557102-5
J2	1252-1543	1	CONN-POST TYPE.100-PIN-SPCG-MTG-END	01380	641215-6
J3	1250-0257	1	CONNECTOR-RF SMB MALE PC-W-STDFS 50-OHM	01380	413990-3
J4	1250-0257	1	CONNECTOR-RF SMB MALE PC-W-STDFS 50-OHM	01380	413990-3
J5	1250-0257	1	CONNECTOR-RF SMB MALE PC-W-STDFS 50-OHM	01380	413990-3
J6	1250-0257	1	CONNECTOR-RF SMB MALE PC-W-STDFS 50-OHM	01380	413990-3
J8	1250-2485	1	CONNECTOR-RF OSMT MALE PC-W/O-STDF	01380	1055688-1
J9	1250-2485	1	CONNECTOR-RF OSMT MALE PC-W/O-STDF	01380	1055688-1
J10	1250-2514	1	CONNECTOR-RF N FEMALE 4-HOLE-FLG-FR	05879	82-97-RFX
J11	1250-2747	1	CONNECTOR-RF BNC FEMALE 4-HOLE-FLG-FR	05879	31-105
J12	1250-2747	1	CONNECTOR-RF BNC FEMALE 4-HOLE-FLG-FR	05879	31-105
J13	1250-2487	1	CONNECTOR-RF SM-SNP MALE THD-HOLE 50-OHM	01380	414895-1
K1	0490-1884	1	RELAY 2C 5VDC	03264	432-7530
K2	0490-1884	1	RELAY 2C 5VDC	03264	432-7530

 **Indicates factory-selected value*

Agilent Part Number E4401-60203
1.5 GHz RF (50 Ohm)

Reference Designator	Agilent Part Number	Qty	Description	Mgr Code	Mfr Part Number
K3	0490-1884	1	RELAY 2C 5VDC	03264	432-7530
K4	0490-1884	1	RELAY 2C 5VDC	03264	432-7530
K5	0490-1884	1	RELAY 2C 5VDC	03264	432-7530
K6	0490-1884	1	RELAY 2C 5VDC	03264	432-7530
K7	0490-1884	1	RELAY 2C 5VDC	03264	432-7530
L1	9140-0738	1	INDUCTOR 100uH .6W-INX.7LG-IN	01869	52405
L2	9140-0738	1	INDUCTOR 100uH .6W-INX.7LG-IN	01869	52405
L3	9140-0738	1	INDUCTOR 100uH .6W-INX.7LG-IN	01869	52405
L4	9140-0736	1	INDUCTOR 200uH .3W-INX.4LG-IN	05524	ITP-1031-32
L5	9140-0736	1	INDUCTOR 200uH .3W-INX.4LG-IN	05524	ITP-1031-32
L6	9140-2055	1	INDUCTOR 3.9nH +10% -10%	06353	LL2012-F3N9K
L7	9140-2055	1	INDUCTOR 3.9nH +10% -10%	06353	LL2012-F3N9K
L8	9140-1944	1	INDUCTOR 6.8nH +5% -5% 1.27W-mmX2.2LG-mm	06353	LL2012-F6N8J
L9	9140-1425	1	INDUCTOR 270nH +-5% 2.8W-mmX3.4LG-mm	06352	NL322522T-R27J
L10	9140-1104	1	INDUCTOR 820nH +-5% 2.8W-mmX3.4LG-mm	09891	KL32TER82J
L11	9140-1424	1	INDUCTOR 180nH +-5% 2.8W-mmX3.4LG-mm	06352	NL322522T-R18J
L12	9140-1424	1	INDUCTOR 180nH +-5% 2.8W-mmX3.4LG-mm	06352	NL322522T-R18J
L13	9140-1099	1	INDUCTOR 220nH +-5% 2.8W-mmX3.4LG-mm	09891	KL32TER22J
L14	9140-1430	1	INDUCTOR 12uH +-5% 3.4W-mmX4.8LG-mm Q50	28480	9140-1430
L15	9140-1430	1	INDUCTOR 12uH +-5% 3.4W-mmX4.8LG-mm Q50	28480	9140-1430
L16	9140-1430	1	INDUCTOR 12uH +-5% 3.4W-mmX4.8LG-mm Q50	28480	9140-1430
L17	9140-1101	1	INDUCTOR 470nH +-5% 2.8W-mmX3.4LG-mm	09891	KL32TER47J
L18	9140-1101	1	INDUCTOR 470nH +-5% 2.8W-mmX3.4LG-mm	09891	KL32TER47J
L19	9140-1430	1	INDUCTOR 12uH +-5% 3.4W-mmX4.8LG-mm Q50	28480	9140-1430
L20	9140-1430	1	INDUCTOR 12uH +-5% 3.4W-mmX4.8LG-mm Q50	28480	9140-1430
L21	9140-1422	1	INDUCTOR 1.8uH +-5% 3.4W-mmX4.8LG-mm	28480	9140-1422

**Indicates factory-selected value*

Agilent Part Number E4401-60203
1.5 GHz RF (50 Ohm)

Reference Designator	Agilent Part Number	Qty	Description	Mgr Code	Mfr Part Number
L22	9140-1238	1	INDUCTOR 10uH +-5% 2.8W-mmX3.4LG-mm Q30	06352	NL322522T-100J
L23	9140-2055	1	INDUCTOR 3.9nH +10% -10%	06353	LL2012-F3N9K
L24	9140-1109	1	INDUCTOR 4.7uH +-5% 3.4W-mmX4.8LG-mm	06352	NL453232-4R7J
L25	9140-1109	1	INDUCTOR 4.7uH +-5% 3.4W-mmX4.8LG-mm	06352	NL453232-4R7J
L26	9140-1508	1	INDUCTOR 100uH +-5% 2.8W-mmX3.4LG-mm	06352	NL322522T-101J
L27	9140-1206	1	INDUCTOR 100nH +-5% 2.8W-mmX3.4LG-mm	06352	NL322522T-R10J
L28	9140-1206	1	INDUCTOR 100nH +-5% 2.8W-mmX3.4LG-mm	06352	NL322522T-R10J
L29	9140-1205	1	INDUCTOR 82nH +-5% 2.8W-mmX3.4LG-mm Q27	09891	KL32TE082J
L30	9140-1205	1	INDUCTOR 82nH +-5% 2.8W-mmX3.4LG-mm Q27	09891	KL32TE082J
L31	9140-1206	1	INDUCTOR 100nH +-5% 2.8W-mmX3.4LG-mm	06352	NL322522T-R10J
L32	9140-1206	1	INDUCTOR 100nH +-5% 2.8W-mmX3.4LG-mm	06352	NL322522T-R10J
L33	9140-1206	1	INDUCTOR 100nH +-5% 2.8W-mmX3.4LG-mm	06352	NL322522T-R10J
L34	9140-1200	1	INDUCTOR 33nH +-5% 2.8W-mmX3.4LG-mm Q25	09891	KL32TE033J
L36	9140-1113	1	INDUCTOR 10uH +-5% 3.4W-mmX4.8LG-mm Q50	28480	9140-1113
L37	9140-1113	1	INDUCTOR 10uH +-5% 3.4W-mmX4.8LG-mm Q50	28480	9140-1113
L38	9140-1206	1	INDUCTOR 100nH +-5% 2.8W-mmX3.4LG-mm	06352	NL322522T-R10J
L39	9140-1206	1	INDUCTOR 100nH +-5% 2.8W-mmX3.4LG-mm	06352	NL322522T-R10J
L40	9140-1206	1	INDUCTOR 100nH +-5% 2.8W-mmX3.4LG-mm	06352	NL322522T-R10J
L44	9140-1206	1	INDUCTOR 100nH +-5% 2.8W-mmX3.4LG-mm	06352	NL322522T-R10J
L45	9140-1206	1	INDUCTOR 100nH +-5% 2.8W-mmX3.4LG-mm	06352	NL322522T-R10J
L46	9140-1206	1	INDUCTOR 100nH +-5% 2.8W-mmX3.4LG-mm	06352	NL322522T-R10J
L49	9140-1206	1	INDUCTOR 100nH +-5% 2.8W-mmX3.4LG-mm	06352	NL322522T-R10J
L50	9140-1206	1	INDUCTOR 100nH +-5% 2.8W-mmX3.4LG-mm	06352	NL322522T-R10J
L51	9140-1206	1	INDUCTOR 100nH +-5% 2.8W-mmX3.4LG-mm	06352	NL322522T-R10J
L55	9140-1425	1	INDUCTOR 270nH +-5% 2.8W-mmX3.4LG-mm	06352	NL322522T-R27J
L56	9140-1206	1	INDUCTOR 100nH +-5% 2.8W-mmX3.4LG-mm	06352	NL322522T-R10J

 **Indicates factory-selected value*

Agilent Part Number E4401-60203
1.5 GHz RF (50 Ohm)

Reference Designator	Agilent Part Number	Qty	Description	Mgr Code	Mfr Part Number
L57	9140-1206	1	INDUCTOR 100nH +-5% 2.8W-mmX3.4LG-mm	06352	NL322522T-R10J
L58	9140-1206	1	INDUCTOR 100nH +-5% 2.8W-mmX3.4LG-mm	06352	NL322522T-R10J
L59	9140-1206	1	INDUCTOR 100nH +-5% 2.8W-mmX3.4LG-mm	06352	NL322522T-R10J
L60	9135-0069	1	INDUCTOR 30nH +-5% 2.6D-mmX6.6LG-mm Q60	03273	10M030X-1
L61	9140-1206	1	INDUCTOR 100nH +-5% 2.8W-mmX3.4LG-mm	06352	NL322522T-R10J
L62	9140-1206	1	INDUCTOR 100nH +-5% 2.8W-mmX3.4LG-mm	06352	NL322522T-R10J
L63	9140-1206	1	INDUCTOR 100nH +-5% 2.8W-mmX3.4LG-mm	06352	NL322522T-R10J
L64	9140-1238	1	INDUCTOR 10uH +-5% 2.8W-mmX3.4LG-mm Q30	06352	NL322522T-100J
L65	9140-1418	1	INDUCTOR 2.7uH +-5% 3.4W-mmX4.8LG-mm	28480	9140-1418
L66	9140-1238	1	INDUCTOR 10uH +-5% 2.8W-mmX3.4LG-mm Q30	06352	NL322522T-100J
L67	9140-1194	1	INDUCTOR 10nH +-10% 2.8W-mmX3.4LG-mm	09891	KL32TE010K
L68	9140-1194	1	INDUCTOR 10nH +-10% 2.8W-mmX3.4LG-mm	09891	KL32TE010K
L69	9140-1104	1	INDUCTOR 820nH +-5% 2.8W-mmX3.4LG-mm	09891	KL32TER82J
L70	9140-1104	1	INDUCTOR 820nH +-5% 2.8W-mmX3.4LG-mm	09891	KL32TER82J
L71	9140-1104	1	INDUCTOR 820nH +-5% 2.8W-mmX3.4LG-mm	09891	KL32TER82J
L72	9140-1104	1	INDUCTOR 820nH +-5% 2.8W-mmX3.4LG-mm	09891	KL32TER82J
MP10	E4401-20047	1	SHLD-RF FRAME	28480	E4401-20047
MP11	E4401-60048	1	SHLD AY-RF TOP	28480	E4401-60048
MP13	E4401-20053	1	CAV BLK-BPF CAST	28480	E4401-20053
MP14	E4401-20034	1	BPF CAVITY COVER	28480	E4401-20034
MP15	E4401-00021	1	COVER-INPUT CONN	28480	E4401-00021
MP20	E4401-00014	1	BPF CPLG LOOP	28480	E4401-00014
MP21	E4401-00020	1	BPF CPLNG LP#2	28480	E4401-00020

Agilent Part Number E4401-60203
1.5 GHz RF (50 Ohm)

Reference Designator	Agilent Part Number	Qty	Description	Mgr Code	Mfr Part Number
MP22	E4401-40017	1	GUIDE-CPLNG LP#2	28480	E4401-40017
MP25	E4401-60098	1	SHLD AY-RF BTM	28480	E4401-60098
MP26	0515-0366	1	SCREW-MACH M2.5 X 0.45 6MM-LG PAN-HD	05610	0515-0366
MP27	0515-0366	1	SCREW-MACH M2.5 X 0.45 6MM-LG PAN-HD	05610	0515-0366
MP28	0515-0366	1	SCREW-MACH M2.5 X 0.45 6MM-LG PAN-HD	05610	0515-0366
MP29	0515-0366	1	SCREW-MACH M2.5 X 0.45 6MM-LG PAN-HD	05610	0515-0366
MP30	0515-0366	1	SCREW-MACH M2.5 X 0.45 6MM-LG PAN-HD	05610	0515-0366
MP31	0515-0366	1	SCREW-MACH M2.5 X 0.45 6MM-LG PAN-HD	05610	0515-0366
MP32	0515-0366	1	SCREW-MACH M2.5 X 0.45 6MM-LG PAN-HD	05610	0515-0366
MP33	0515-0366	1	SCREW-MACH M2.5 X 0.45 6MM-LG PAN-HD	05610	0515-0366
MP34	0515-0372	1	SCREW-MACHINE ASSEMBLY M3 X 0.5 8MM-LG	05610	0515-0372
MP35	0515-0372	1	SCREW-MACHINE ASSEMBLY M3 X 0.5 8MM-LG	05610	0515-0372
MP36	0515-0372	1	SCREW-MACHINE ASSEMBLY M3 X 0.5 8MM-LG	05610	0515-0372
MP37	0515-0372	1	SCREW-MACHINE ASSEMBLY M3 X 0.5 8MM-LG	05610	0515-0372
MP38	0515-0372	1	SCREW-MACHINE ASSEMBLY M3 X 0.5 8MM-LG	05610	0515-0372
MP39	0515-0372	1	SCREW-MACHINE ASSEMBLY M3 X 0.5 8MM-LG	05610	0515-0372
MP40	0515-0372	1	SCREW-MACHINE ASSEMBLY M3 X 0.5 8MM-LG	05610	0515-0372
MP41	0515-0372	1	SCREW-MACHINE ASSEMBLY M3 X 0.5 8MM-LG	05610	0515-0372
MP42	0515-0372	1	SCREW-MACHINE ASSEMBLY M3 X 0.5 8MM-LG	05610	0515-0372
MP43	0515-0372	1	SCREW-MACHINE ASSEMBLY M3 X 0.5 8MM-LG	05610	0515-0372
MP44	0515-0372	1	SCREW-MACHINE ASSEMBLY M3 X 0.5 8MM-LG	05610	0515-0372

 **Indicates factory-selected value*

Agilent Part Number E4401-60203
1.5 GHz RF (50 Ohm)

Reference Designator	Agilent Part Number	Qty	Description	Mgr Code	Mfr Part Number
MP45	0515-0372	1	SCREW-MACHINE ASSEMBLY M3 X 0.5 8MM-LG	05610	0515-0372
MP46	0515-0372	1	SCREW-MACHINE ASSEMBLY M3 X 0.5 8MM-LG	05610	0515-0372
MP47	0515-0372	1	SCREW-MACHINE ASSEMBLY M3 X 0.5 8MM-LG	05610	0515-0372
MP48	0515-0372	1	SCREW-MACHINE ASSEMBLY M3 X 0.5 8MM-LG	05610	0515-0372
MP49	0515-0372	1	SCREW-MACHINE ASSEMBLY M3 X 0.5 8MM-LG	05610	0515-0372
MP50	0515-0372	1	SCREW-MACHINE ASSEMBLY M3 X 0.5 8MM-LG	05610	0515-0372
MP51	0515-0372	1	SCREW-MACHINE ASSEMBLY M3 X 0.5 8MM-LG	05610	0515-0372
MP52	0515-0372	1	SCREW-MACHINE ASSEMBLY M3 X 0.5 8MM-LG	05610	0515-0372
MP53	0515-0372	1	SCREW-MACHINE ASSEMBLY M3 X 0.5 8MM-LG	05610	0515-0372
MP54	0515-0372	1	SCREW-MACHINE ASSEMBLY M3 X 0.5 8MM-LG	05610	0515-0372
MP55	0515-0372	1	SCREW-MACHINE ASSEMBLY M3 X 0.5 8MM-LG	05610	0515-0372
MP56	0515-0372	1	SCREW-MACHINE ASSEMBLY M3 X 0.5 8MM-LG	05610	0515-0372
MP57	0515-0372	1	SCREW-MACHINE ASSEMBLY M3 X 0.5 8MM-LG	05610	0515-0372
MP58	0515-0372	1	SCREW-MACHINE ASSEMBLY M3 X 0.5 8MM-LG	05610	0515-0372
MP59	0515-0372	1	SCREW-MACHINE ASSEMBLY M3 X 0.5 8MM-LG	05610	0515-0372
MP60	0515-0372	1	SCREW-MACHINE ASSEMBLY M3 X 0.5 8MM-LG	05610	0515-0372
MP61	0515-0372	1	SCREW-MACHINE ASSEMBLY M3 X 0.5 8MM-LG	05610	0515-0372
MP62	0515-0372	1	SCREW-MACHINE ASSEMBLY M3 X 0.5 8MM-LG	05610	0515-0372
MP63	0515-0372	1	SCREW-MACHINE ASSEMBLY M3 X 0.5 8MM-LG	05610	0515-0372

**Indicates factory-selected value*

Agilent Part Number E4401-60203
1.5 GHz RF (50 Ohm)

Reference Designator	Agilent Part Number	Qty	Description	Mgr Code	Mfr Part Number
MP64	0515-0372	1	SCREW-MACHINE ASSEMBLY M3 X 0.5 8MM-LG	05610	0515-0372
MP65	0515-0372	1	SCREW-MACHINE ASSEMBLY M3 X 0.5 8MM-LG	05610	0515-0372
MP66	0515-0372	1	SCREW-MACHINE ASSEMBLY M3 X 0.5 8MM-LG	05610	0515-0372
MP67	0515-0372	1	SCREW-MACHINE ASSEMBLY M3 X 0.5 8MM-LG	05610	0515-0372
MP68	0515-0372	1	SCREW-MACHINE ASSEMBLY M3 X 0.5 8MM-LG	05610	0515-0372
MP69	0515-0372	1	SCREW-MACHINE ASSEMBLY M3 X 0.5 8MM-LG	05610	0515-0372
MP70	0515-0372	1	SCREW-MACHINE ASSEMBLY M3 X 0.5 8MM-LG	05610	0515-0372
MP71	0515-0372	1	SCREW-MACHINE ASSEMBLY M3 X 0.5 8MM-LG	05610	0515-0372
MP72	0515-0372	1	SCREW-MACHINE ASSEMBLY M3 X 0.5 8MM-LG	05610	0515-0372
MP73	0515-0372	1	SCREW-MACHINE ASSEMBLY M3 X 0.5 8MM-LG	05610	0515-0372
MP74	0515-0372	1	SCREW-MACHINE ASSEMBLY M3 X 0.5 8MM-LG	05610	0515-0372
MP75	0515-0372	1	SCREW-MACHINE ASSEMBLY M3 X 0.5 8MM-LG	05610	0515-0372
MP76	0515-0372	1	SCREW-MACHINE ASSEMBLY M3 X 0.5 8MM-LG	05610	0515-0372
MP77	0515-0372	1	SCREW-MACHINE ASSEMBLY M3 X 0.5 8MM-LG	05610	0515-0372
MP78	0515-0372	1	SCREW-MACHINE ASSEMBLY M3 X 0.5 8MM-LG	05610	0515-0372
MP79	0515-2994	1	SCREW-MACHINE ASSEMBLY M3 X 0.5 14MM-LG	05610	0515-2994
MP80	0515-2994	1	SCREW-MACHINE ASSEMBLY M3 X 0.5 14MM-LG	05610	0515-2994
MP81	0515-2994	1	SCREW-MACHINE ASSEMBLY M3 X 0.5 14MM-LG	05610	0515-2994
MP82	0515-2994	1	SCREW-MACHINE ASSEMBLY M3 X 0.5 14MM-LG	05610	0515-2994

 **Indicates factory-selected value*

Agilent Part Number E4401-60203
1.5 GHz RF (50 Ohm)

Reference Designator	Agilent Part Number	Qty	Description	Mgr Code	Mfr Part Number
MP83	0515-2994	1	SCREW-MACHINE ASSEMBLY M3 X 0.5 14MM-LG	05610	0515-2994
MP84	0515-2994	1	SCREW-MACHINE ASSEMBLY M3 X 0.5 14MM-LG	05610	0515-2994
MP85	0515-2994	1	SCREW-MACHINE ASSEMBLY M3 X 0.5 14MM-LG	05610	0515-2994
MP86	0515-2994	1	SCREW-MACHINE ASSEMBLY M3 X 0.5 14MM-LG	05610	0515-2994
MP87	0515-2994	1	SCREW-MACHINE ASSEMBLY M3 X 0.5 14MM-LG	05610	0515-2994
MP88	0515-2994	1	SCREW-MACHINE ASSEMBLY M3 X 0.5 14MM-LG	05610	0515-2994
MP89	0515-2994	1	SCREW-MACHINE ASSEMBLY M3 X 0.5 14MM-LG	05610	0515-2994
MP90	0515-2994	1	SCREW-MACHINE ASSEMBLY M3 X 0.5 14MM-LG	05610	0515-2994
MP91	0515-2994	1	SCREW-MACHINE ASSEMBLY M3 X 0.5 14MM-LG	05610	0515-2994
MP92	0515-2994	1	SCREW-MACHINE ASSEMBLY M3 X 0.5 14MM-LG	05610	0515-2994
MP93	0515-2994	1	SCREW-MACHINE ASSEMBLY M3 X 0.5 14MM-LG	05610	0515-2994
MP94	0515-2994	1	SCREW-MACHINE ASSEMBLY M3 X 0.5 14MM-LG	05610	0515-2994
MP95	0515-2994	1	SCREW-MACHINE ASSEMBLY M3 X 0.5 14MM-LG	05610	0515-2994
MP96	0515-2994	1	SCREW-MACHINE ASSEMBLY M3 X 0.5 14MM-LG	05610	0515-2994
MP97	0515-2994	1	SCREW-MACHINE ASSEMBLY M3 X 0.5 14MM-LG	05610	0515-2994
MP98	0515-2994	1	SCREW-MACHINE ASSEMBLY M3 X 0.5 14MM-LG	05610	0515-2994
MP99	0515-2994	1	SCREW-MACHINE ASSEMBLY M3 X 0.5 14MM-LG	05610	0515-2994
MP100	0515-2994	1	SCREW-MACHINE ASSEMBLY M3 X 0.5 14MM-LG	05610	0515-2994
MP101	0515-2994	1	SCREW-MACHINE ASSEMBLY M3 X 0.5 14MM-LG	05610	0515-2994

Agilent Part Number E4401-60203
1.5 GHz RF (50 Ohm)

Reference Designator	Agilent Part Number	Qty	Description	Mgr Code	Mfr Part Number
MP102	0515-2994	1	SCREW-MACHINE ASSEMBLY M3 X 0.5 14MM-LG	05610	0515-2994
MP103	0515-2994	1	SCREW-MACHINE ASSEMBLY M3 X 0.5 14MM-LG	05610	0515-2994
MP104	0515-2994	1	SCREW-MACHINE ASSEMBLY M3 X 0.5 14MM-LG	05610	0515-2994
MP105	0515-2994	1	SCREW-MACHINE ASSEMBLY M3 X 0.5 14MM-LG	05610	0515-2994
MP106	0515-2994	1	SCREW-MACHINE ASSEMBLY M3 X 0.5 14MM-LG	05610	0515-2994
MP107	0515-2994	1	SCREW-MACHINE ASSEMBLY M3 X 0.5 14MM-LG	05610	0515-2994
MP108	0515-2994	1	SCREW-MACHINE ASSEMBLY M3 X 0.5 14MM-LG	05610	0515-2994
MP109	0515-2994	1	SCREW-MACHINE ASSEMBLY M3 X 0.5 14MM-LG	05610	0515-2994
MP110	0515-2994	1	SCREW-MACHINE ASSEMBLY M3 X 0.5 14MM-LG	05610	0515-2994
MP111	0515-2994	1	SCREW-MACHINE ASSEMBLY M3 X 0.5 14MM-LG	05610	0515-2994
MP112	0515-2994	1	SCREW-MACHINE ASSEMBLY M3 X 0.5 14MM-LG	05610	0515-2994
MP113	0515-2994	1	SCREW-MACHINE ASSEMBLY M3 X 0.5 14MM-LG	05610	0515-2994
MP114	0515-2994	1	SCREW-MACHINE ASSEMBLY M3 X 0.5 14MM-LG	05610	0515-2994
MP115	0515-2994	1	SCREW-MACHINE ASSEMBLY M3 X 0.5 14MM-LG	05610	0515-2994
MP116	0515-2994	1	SCREW-MACHINE ASSEMBLY M3 X 0.5 14MM-LG	05610	0515-2994
MP117	0515-2994	1	SCREW-MACHINE ASSEMBLY M3 X 0.5 14MM-LG	05610	0515-2994
MP118	0515-2994	1	SCREW-MACHINE ASSEMBLY M3 X 0.5 14MM-LG	05610	0515-2994
MP119	0515-2994	1	SCREW-MACHINE ASSEMBLY M3 X 0.5 14MM-LG	05610	0515-2994
MP120	0515-1042	1	SCREW-SKT-HD-CAP M1.6 X 0.35 3MM-LG	06691	0515-1042

 **Indicates factory-selected value*

Agilent Part Number E4401-60203
1.5 GHz RF (50 Ohm)

Reference Designator	Agilent Part Number	Qty	Description	Mgr Code	Mfr Part Number
MP121	0515-1042	1	SCREW-SKT-HD-CAP M1.6 X 0.35 3MM-LG	06691	0515-1042
MP122	0515-2487	1	SCREW-MACH M2.5 X 0.45 8MM-LG	12384	0515-2487
MP123	0515-2487	1	SCREW-MACH M2.5 X 0.45 8MM-LG	12384	0515-2487
MP124	0515-2487	1	SCREW-MACH M2.5 X 0.45 8MM-LG	12384	0515-2487
MP125	0515-2487	1	SCREW-MACH M2.5 X 0.45 8MM-LG	12384	0515-2487
MP126	8160-0448		RFI ROUND STRIP BE-CU SN-PL .062-IN-OD	10840	SS-04
Q1	1855-0734	1	TRANSISTOR MOSFET 2N7002 N-CHAN E-MODE	02910	2N7002
Q2	1855-0734	1	TRANSISTOR MOSFET 2N7002 N-CHAN E-MODE	02910	2N7002
Q3	1855-0734	1	TRANSISTOR MOSFET 2N7002 N-CHAN E-MODE	02910	2N7002
Q4	1854-1037	1	TRANSISTOR NPN SI TO-236AA PD350MW	00746	SST3904T116
Q5	1853-0567	1	TRANSISTOR PNP SI SOT-23 (TO-236AB)	00746	SST3906T116
Q6	1855-0935	1	TRANSISTOR GAAS FET N-CHAN D-MODE	28480	1855-0935
Q7	1855-0935	1	TRANSISTOR GAAS FET N-CHAN D-MODE	28480	1855-0935
Q8	1853-0567	1	TRANSISTOR PNP SI SOT-23 (TO-236AB)	00746	SST3906T116
Q9	1855-0935	1	TRANSISTOR GAAS FET N-CHAN D-MODE	28480	1855-0935
Q10	1853-0567	1	TRANSISTOR PNP SI SOT-23 (TO-236AB)	00746	SST3906T116
Q11	1855-0935	1	TRANSISTOR GAAS FET N-CHAN D-MODE	28480	1855-0935
Q12	1853-0567	1	TRANSISTOR PNP SI SOT-23 (TO-236AB)	00746	SST3906T116
Q13	1855-0935	1	TRANSISTOR GAAS FET N-CHAN D-MODE	28480	1855-0935
Q14	1853-0567	1	TRANSISTOR PNP SI SOT-23 (TO-236AB)	00746	SST3906T116
Q15	1855-0935	1	TRANSISTOR GAAS FET N-CHAN D-MODE	28480	1855-0935
Q16	1855-0935	1	TRANSISTOR GAAS FET N-CHAN D-MODE	28480	1855-0935
Q17	1853-0567	1	TRANSISTOR PNP SI SOT-23 (TO-236AB)	00746	SST3906T116
Q19	1826-4171	1	IC RF/IF AMPL GP SINGLE 4 PIN PLASTIC	02686	AM1
Q20	1855-0991	1	TRANSISTOR MOSFET N-CHAN E-MODE SOT-223	36633	MMFT960T1
Q23	1855-0935	1	TRANSISTOR GAAS FET N-CHAN D-MODE	28480	1855-0935
Q24	1855-0935	1	TRANSISTOR GAAS FET N-CHAN D-MODE	28480	1855-0935

Agilent Part Number E4401-60203
1.5 GHz RF (50 Ohm)

Reference Designator	Agilent Part Number	Qty	Description	Mgr Code	Mfr Part Number
Q25	1855-0935	1	TRANSISTOR GAAS FET N-CHAN D-MODE	28480	1855-0935
Q26	1853-0567	1	TRANSISTOR PNP SI SOT-23 (TO-236AB)	00746	SST3906T116
Q27	1854-1270	1	TRANSISTOR NPN SI TO-261AA (SOT-223)	02910	PZT2222A
Q28	1854-1037	1	TRANSISTOR NPN SI TO-236AA PD350MW	00746	SST3904T116
Q29	1854-1037	1	TRANSISTOR NPN SI TO-236AA PD350MW	00746	SST3904T116
Q30	1854-1037	1	TRANSISTOR NPN SI TO-236AA PD350MW	00746	SST3904T116
Q31	1854-1037	1	TRANSISTOR NPN SI TO-236AA PD350MW	00746	SST3904T116
Q32	1854-1037	1	TRANSISTOR NPN SI TO-236AA PD350MW	00746	SST3904T116
Q33	1853-0567	1	TRANSISTOR PNP SI SOT-23 (TO-236AB)	00746	SST3906T116
Q34	1854-1037	1	TRANSISTOR NPN SI TO-236AA PD350MW	00746	SST3904T116
Q35	1853-0567	1	TRANSISTOR PNP SI SOT-23 (TO-236AB)	00746	SST3906T116
Q36	1854-1037	1	TRANSISTOR NPN SI TO-236AA PD350MW	00746	SST3904T116
Q37	1853-0567	1	TRANSISTOR PNP SI SOT-23 (TO-236AB)	00746	SST3906T116
Q38	1853-0567	1	TRANSISTOR PNP SI SOT-23 (TO-236AB)	00746	SST3906T116
Q39	1854-1037	1	TRANSISTOR NPN SI TO-236AA PD350MW	00746	SST3904T116
Q40	1853-0567	1	TRANSISTOR PNP SI SOT-23 (TO-236AB)	00746	SST3906T116
Q41	1854-1037	1	TRANSISTOR NPN SI TO-236AA PD350MW	00746	SST3904T116
Q42	1854-1037	1	TRANSISTOR NPN SI TO-236AA PD350MW	00746	SST3904T116
Q44	1854-1037	1	TRANSISTOR NPN SI TO-236AA PD350MW	00746	SST3904T116
Q45	1853-0580	1	TRANSISTOR PNP SI SOT-23 (TO-236AB)	00746	SST4403
Q46	1854-1188	1	TRANSISTOR NPN SI SOT-23 (TO-236AB)	11699	CMPT4401
Q47	1853-0567	1	TRANSISTOR PNP SI SOT-23 (TO-236AB)	00746	SST3906T116
Q48	1853-0567	1	TRANSISTOR PNP SI SOT-23 (TO-236AB)	00746	SST3906T116
Q49	1853-0567	1	TRANSISTOR PNP SI SOT-23 (TO-236AB)	00746	SST3906T116
Q50	1853-0567	1	TRANSISTOR PNP SI SOT-23 (TO-236AB)	00746	SST3906T116
Q51	1853-0568	1	TRANSISTOR PNP SI TO-236AA PD350MW	36633	MMBT5087LT1
Q52	1854-1270	1	TRANSISTOR NPN SI TO-261AA (SOT-223)	02910	PZT2222A
Q53	1854-1298	1	TRANSISTOR NPN SI PD500MW	01542	AT-41486
Q54	1853-0580	1	TRANSISTOR PNP SI SOT-23 (TO-236AB)	00746	SST4403
Q55	1853-0567	1	TRANSISTOR PNP SI SOT-23 (TO-236AB)	00746	SST3906T116

 **Indicates factory-selected value*

Agilent Part Number E4401-60203
1.5 GHz RF (50 Ohm)

Reference Designator	Agilent Part Number	Qty	Description	Mgr Code	Mfr Part Number
Q56	1854-1037	1	TRANSISTOR NPN SI TO-236AA PD350MW	00746	SST3904T116
Q57	1854-1083	1	TRANSISTOR NPN SI SOT-23 (TO-236AB)	11699	CMPT5179
Q58	1854-1270	1	TRANSISTOR NPN SI TO-261AA (SOT-223)	02910	PZT2222A
Q59	1854-1037	1	TRANSISTOR NPN SI TO-236AA PD350MW	00746	SST3904T116
Q60	1853-0580	1	TRANSISTOR PNP SI SOT-23 (TO-236AB)	00746	SST4403
Q61	1854-1037	1	TRANSISTOR NPN SI TO-236AA PD350MW	00746	SST3904T116
Q62	1853-0580	1	TRANSISTOR PNP SI SOT-23 (TO-236AB)	00746	SST4403
Q63	1854-1037	1	TRANSISTOR NPN SI TO-236AA PD350MW	00746	SST3904T116
Q64	1853-0580	1	TRANSISTOR PNP SI SOT-23 (TO-236AB)	00746	SST4403
Q65	1853-0567	1	TRANSISTOR PNP SI SOT-23 (TO-236AB)	00746	SST3906T116
Q66	1853-0567	1	TRANSISTOR PNP SI SOT-23 (TO-236AB)	00746	SST3906T116
Q67	1854-1270	1	TRANSISTOR NPN SI TO-261AA (SOT-223)	02910	PZT2222A
Q68	1853-0568	1	TRANSISTOR PNP SI TO-236AA PD350MW	36633	MMBT5087LT1
Q69	1854-1298	1	TRANSISTOR NPN SI PD500MW	01542	AT-41486
Q70	1853-0580	1	TRANSISTOR PNP SI SOT-23 (TO-236AB)	00746	SST4403
Q71	1854-1037	1	TRANSISTOR NPN SI TO-236AA PD350MW	00746	SST3904T116
Q72	1854-1083	1	TRANSISTOR NPN SI SOT-23 (TO-236AB)	11699	CMPT5179
Q73	1854-1270	1	TRANSISTOR NPN SI TO-261AA (SOT-223)	02910	PZT2222A
Q74	1854-1037	1	TRANSISTOR NPN SI TO-236AA PD350MW	00746	SST3904T116
Q75	1854-1270	1	TRANSISTOR NPN SI TO-261AA (SOT-223)	02910	PZT2222A
Q76	1854-1188	1	TRANSISTOR NPN SI SOT-23 (TO-236AB)	11699	CMPT4401
Q77	1855-0734	1	TRANSISTOR MOSFET 2N7002 N-CHAN E-MODE	02910	2N7002
Q78	1854-1037	1	TRANSISTOR NPN SI TO-236AA PD350MW	00746	SST3904T116
Q79	1854-1188	1	TRANSISTOR NPN SI SOT-23 (TO-236AB)	11699	CMPT4401
Q80	1854-1188	1	TRANSISTOR NPN SI SOT-23 (TO-236AB)	11699	CMPT4401
Q81	1854-1188	1	TRANSISTOR NPN SI SOT-23 (TO-236AB)	11699	CMPT4401
Q82	1854-1188	1	TRANSISTOR NPN SI SOT-23 (TO-236AB)	11699	CMPT4401
Q83	1854-1037	1	TRANSISTOR NPN SI TO-236AA PD350MW	00746	SST3904T116
Q84	1853-0567	1	TRANSISTOR PNP SI SOT-23 (TO-236AB)	00746	SST3906T116

Agilent Part Number E4401-60203
1.5 GHz RF (50 Ohm)

Reference Designator	Agilent Part Number	Qty	Description	Mgr Code	Mfr Part Number
Q85	1826-4171	1	IC RF/IF AMPL GP SINGLE 4 PIN PLASTIC	02686	AM1
Q86	1826-4171	1	IC RF/IF AMPL GP SINGLE 4 PIN PLASTIC	02686	AM1
R1	0699-3993	1	RESISTOR 100K +-1% .063W TKF TC0+-200	09891	RK73H1J1003F
R2	1810-1906	1	NET-RES 4 10.0K OHM	09891	CN2B4103F
R3	0699-1441	1	RESISTOR 133K +-1% .125W TKF TC0+-100	00746	MCR18-F-1333
R4	1810-1907	1	NET-RES 4 100.0K OHM	09891	CN2B4104F
R5	0699-3993	1	RESISTOR 100K +-1% .063W TKF TC0+-200	09891	RK73H1J1003F
R6	0811-3587	1	RESISTOR 0 CWM	03123	104
R7	0811-3587	1	RESISTOR 0 CWM	03123	104
R8	0699-3953	1	RESISTOR 1.78K +-1% .063W TKF TC0+-200	00746	MCR03-F-1781
R10	0699-3970	1	RESISTOR 10K +-1% .063W TKF TC0+-200	09891	RK73H1J1002F
R11	0699-3953	1	RESISTOR 1.78K +-1% .063W TKF TC0+-200	00746	MCR03-F-1781
R12	0699-3932	1	RESISTOR 215 +-1% .063W TKF TC0+-200	00746	MCR03-F-2150
R13	0699-1453	1	RESISTOR 464K +-1% .125W TKF TC0+-100	00746	MCR18-F-4643
R14	0699-1453	1	RESISTOR 464K +-1% .125W TKF TC0+-100	00746	MCR18-F-4643
R15	0699-3932	1	RESISTOR 215 +-1% .063W TKF TC0+-200	00746	MCR03-F-2150
R16	0699-1432	1	RESISTOR 511 +-1% .125W TKF TC0+-100	00746	MCR18-F-5110
R17	0699-1432	1	RESISTOR 511 +-1% .125W TKF TC0+-100	00746	MCR18-F-5110
R18	0699-3970	1	RESISTOR 10K +-1% .063W TKF TC0+-200	09891	RK73H1J1002F
R19	0699-3955	1	RESISTOR 2.15K +-1% .063W TKF TC0+-200	09891	RK73H1J2151F
R20	0699-3970	1	RESISTOR 10K +-1% .063W TKF TC0+-200	09891	RK73H1J1002F
R21	0699-3964	1	RESISTOR 5.11K +-1% .063W TKF TC0+-200	09891	RK73H1J5111F
R22	0699-1360	1	RESISTOR 46.4 +-1% .125W TKF TC0+-100	05524	CRCW120646R4F
R23	0699-1360	1	RESISTOR 46.4 +-1% .125W TKF TC0+-100	05524	CRCW120646R4F
R24	0699-1350	1	RESISTOR 17.8 +-1% .125W TKF TC0+-100	00746	MCR18-F-17R8
R25	0699-1360	1	RESISTOR 46.4 +-1% .125W TKF TC0+-100	05524	CRCW120646R4F
R26	0699-1360	1	RESISTOR 46.4 +-1% .125W TKF TC0+-100	05524	CRCW120646R4F
R27	0699-3910	1	RESISTOR 23.7 +-1% .063W TKF TC0+-200	09891	RK73H1J23R7F
R28	0699-1348	1	RESISTOR 14.7 +-1% .125W TKF TC0+-100	05524	CRCW120614R7F
R29	0699-1344	1	RESISTOR 10 +-1% .125W TKF TC0+-100	09891	RK73H2BT10R0F

 **Indicates factory-selected value*

Agilent Part Number E4401-60203
1.5 GHz RF (50 Ohm)

Reference Designator	Agilent Part Number	Qty	Description	Mgr Code	Mfr Part Number
R30	0699-1423	1	RESISTOR 215 +-1% .125W TKF TC0+-100	05524	CRCW12062150F
R31	0699-1432	1	RESISTOR 511 +-1% .125W TKF TC0+-100	00746	MCR18-F-5110
R32	0699-1366	1	RESISTOR 82.5 +-1% .125W TKF TC0+-100	05524	CRCW120682R5F
R33	0699-1419	1	RESISTOR 147 +-1% .125W TKF TC0+-100	05524	CRCW12061470F
R34	0699-1419	1	RESISTOR 147 +-1% .125W TKF TC0+-100	05524	CRCW12061470F
R35	0699-1367	1	RESISTOR 90.9 +-1% .125W TKF TC0+-100	05524	CRCW120690R9F
R36	0699-1363	1	RESISTOR 61.9 +-1% .125W TKF TC0+-100	05524	CRCW120661R9F
R37	0699-1367	1	RESISTOR 90.9 +-1% .125W TKF TC0+-100	05524	CRCW120690R9F
R38	0699-1415	1	RESISTOR 100 +-1% .125W TKF TC0+-100	05524	CRCW12061000F
R39	0699-1421	1	RESISTOR 178 +-1% .125W TKF TC0+-100	09891	RK73H2BT1780F
R40	0699-1356	1	RESISTOR 31.6 +-1% .25W TKF TC0+-100	09891	RK73H2BT31R6F
R41	0699-1421	1	RESISTOR 178 +-1% .125W TKF TC0+-100	09891	RK73H2BT1780F
R42	0699-3927	1	RESISTOR 133 +-1% .063W TKF TC0+-200	00746	MCR03-F-1330
R43	0699-3921	1	RESISTOR 75 +-1% .063W TKF TC0+-200	00746	MCR03-F-75R0
R44	0699-3921	1	RESISTOR 75 +-1% .063W TKF TC0+-200	00746	MCR03-F-75R0
R45	0699-3927	1	RESISTOR 133 +-1% .063W TKF TC0+-200	00746	MCR03-F-1330
R46	0699-3921	1	RESISTOR 75 +-1% .063W TKF TC0+-200	00746	MCR03-F-75R0
R47	0699-3921	1	RESISTOR 75 +-1% .063W TKF TC0+-200	00746	MCR03-F-75R0
R48	0699-1350	1	RESISTOR 17.8 +-1% .125W TKF TC0+-100	00746	MCR18-F-17R8
R49	0699-3941	1	RESISTOR 511 +-1% .063W TKF TC0+-200	00746	MCR03-F-5110
R50	0699-3977	1	RESISTOR 19.6K +-1% .063W TKF TC0+-200	09891	RK73H1J1962F
R51	0699-2846	1	RESISTOR 5K +-0.1% .125W TF TC0+-25	02499	W1206R035001BT
R52	0699-2846	1	RESISTOR 5K +-0.1% .125W TF TC0+-25	02499	W1206R035001BT
R53	0699-2846	1	RESISTOR 5K +-0.1% .125W TF TC0+-25	02499	W1206R035001BT
R54	0699-2846	1	RESISTOR 5K +-0.1% .125W TF TC0+-25	02499	W1206R035001BT
R55	0699-3952	1	RESISTOR 1.62K +-1% .063W TKF TC0+-200	09891	RK73H1J1621F
R56	0699-3924	1	RESISTOR 100 +-1% .063W TKF TC0+-200	00746	MCR03-F-1000
R57	0699-3965	1	RESISTOR 6.19K +-1% .063W TKF TC0+-200	09891	RK73H1J6191F
R58	0699-3948	1	RESISTOR 1.1K +-1% .063W TKF TC0+-200	00746	MCR03-F-1101
R59	0699-3966	1	RESISTOR 6.81K +-1% .063W TKF TC0+-200	09891	RK73H1J6811F

Agilent Part Number E4401-60203
1.5 GHz RF (50 Ohm)

Reference Designator	Agilent Part Number	Qty	Description	Mgr Code	Mfr Part Number
R60	0699-3964	1	RESISTOR 5.11K +-1% .063W TKF TC0+-200	09891	RK73H1J5111F
R61	0699-3964	1	RESISTOR 5.11K +-1% .063W TKF TC0+-200	09891	RK73H1J5111F
R62	0699-3964	1	RESISTOR 5.11K +-1% .063W TKF TC0+-200	09891	RK73H1J5111F
R63	0699-3924	1	RESISTOR 100 +-1% .063W TKF TC0+-200	00746	MCR03-F-1000
R64	0699-3924	1	RESISTOR 100 +-1% .063W TKF TC0+-200	00746	MCR03-F-1000
R65	0699-3924	1	RESISTOR 100 +-1% .063W TKF TC0+-200	00746	MCR03-F-1000
R66	0699-3918	1	RESISTOR 51.1 +-1% .063W TKF TC0+-200	00746	MCR03-F-51R1
R67	0699-3918	1	RESISTOR 51.1 +-1% .063W TKF TC0+-200	00746	MCR03-F-51R1
R68	0699-3918	1	RESISTOR 51.1 +-1% .063W TKF TC0+-200	00746	MCR03-F-51R1
R69	0699-3931	1	RESISTOR 196 +-1% .063W TKF TC0+-200	09891	RK73H1J1960F
R70	0699-3931	1	RESISTOR 196 +-1% .063W TKF TC0+-200	09891	RK73H1J1960F
R71	0699-1364	1	RESISTOR 68.1 +-1% .125W TKF TC0+-100	05524	CRCW120668R1F
R72	0699-3931	1	RESISTOR 196 +-1% .063W TKF TC0+-200	09891	RK73H1J1960F
R73	0699-3931	1	RESISTOR 196 +-1% .063W TKF TC0+-200	09891	RK73H1J1960F
R74	0699-3919	1	RESISTOR 61.9 +-1% .063W TKF TC0+-200	05524	CRCW060361R9F
R75	0699-3919	1	RESISTOR 61.9 +-1% .063W TKF TC0+-200	05524	CRCW060361R9F
R76	1810-1360	1	NET-RES 8 10.0K OHM 16-PIN	05524	SOMC-1603-103G
R77	0699-3919	1	RESISTOR 61.9 +-1% .063W TKF TC0+-200	05524	CRCW060361R9F
R78	0699-3919	1	RESISTOR 61.9 +-1% .063W TKF TC0+-200	05524	CRCW060361R9F
R79	0699-3919	1	RESISTOR 61.9 +-1% .063W TKF TC0+-200	05524	CRCW060361R9F
R80	0699-3919	1	RESISTOR 61.9 +-1% .063W TKF TC0+-200	05524	CRCW060361R9F
R81	0699-3963	1	RESISTOR 4.64K +-1% .063W TKF TC0+-200	09891	RK73H1J4641F
R82	0699-3941	1	RESISTOR 511 +-1% .063W TKF TC0+-200	00746	MCR03-F-5110
R83	0699-3924	1	RESISTOR 100 +-1% .063W TKF TC0+-200	00746	MCR03-F-1000
R84	0699-3924	1	RESISTOR 100 +-1% .063W TKF TC0+-200	00746	MCR03-F-1000
R85	0699-3924	1	RESISTOR 100 +-1% .063W TKF TC0+-200	00746	MCR03-F-1000
R86	0699-3924	1	RESISTOR 100 +-1% .063W TKF TC0+-200	00746	MCR03-F-1000
R87	0699-3941	1	RESISTOR 511 +-1% .063W TKF TC0+-200	00746	MCR03-F-5110
R88	0699-1362	1	RESISTOR 56.2 +-1% .125W TKF TC0+-100	00746	MCR18-F-56R2
R89	0699-1362	1	RESISTOR 56.2 +-1% .125W TKF TC0+-100	00746	MCR18-F-56R2

 **Indicates factory-selected value*

Agilent Part Number E4401-60203
1.5 GHz RF (50 Ohm)

Reference Designator	Agilent Part Number	Qty	Description	Mgr Code	Mfr Part Number
R90	0699-2064	1	RESISTOR 6.8 +-5% .125W TKF TC0+-500	00746	MCR18-J-6R8
R91	0699-2064	1	RESISTOR 6.8 +-5% .125W TKF TC0+-500	00746	MCR18-J-6R8
R92	0699-3941	1	RESISTOR 511 +-1% .063W TKF TC0+-200	00746	MCR03-F-5110
R93	0699-3918	1	RESISTOR 51.1 +-1% .063W TKF TC0+-200	00746	MCR03-F-51R1
R94	0699-3941	1	RESISTOR 511 +-1% .063W TKF TC0+-200	00746	MCR03-F-5110
R95	0699-3951	1	RESISTOR 1.47K +-1% .063W TKF TC0+-200	00746	MCR03-F-1471
R96	0699-3950	1	RESISTOR 1.33K +-1% .063W TKF TC0+-200	09891	RK73H1J1331F
R97	1810-1231	1	NET-RES 8 100.0 OHM 16-PIN	05524	SOMC16-03-101G
R98	0699-3951	1	RESISTOR 1.47K +-1% .063W TKF TC0+-200	00746	MCR03-F-1471
R99	1810-1580	1	NET-RES 4 10.0K OHM 8-PIN	00746	MNR34K5ABJ103
R100	0699-3924	1	RESISTOR 100 +-1% .063W TKF TC0+-200	00746	MCR03-F-1000
R101	0699-3924	1	RESISTOR 100 +-1% .063W TKF TC0+-200	00746	MCR03-F-1000
R102	0699-3924	1	RESISTOR 100 +-1% .063W TKF TC0+-200	00746	MCR03-F-1000
R103	0699-3951	1	RESISTOR 1.47K +-1% .063W TKF TC0+-200	00746	MCR03-F-1471
R104	0699-3950	1	RESISTOR 1.33K +-1% .063W TKF TC0+-200	09891	RK73H1J1331F
R105	0699-3951	1	RESISTOR 1.47K +-1% .063W TKF TC0+-200	00746	MCR03-F-1471
R106	0699-3924	1	RESISTOR 100 +-1% .063W TKF TC0+-200	00746	MCR03-F-1000
R107	0699-3924	1	RESISTOR 100 +-1% .063W TKF TC0+-200	00746	MCR03-F-1000
R108	0699-3924	1	RESISTOR 100 +-1% .063W TKF TC0+-200	00746	MCR03-F-1000
R109	0699-3951	1	RESISTOR 1.47K +-1% .063W TKF TC0+-200	00746	MCR03-F-1471
R110	0699-3951	1	RESISTOR 1.47K +-1% .063W TKF TC0+-200	00746	MCR03-F-1471
R111	0699-3950	1	RESISTOR 1.33K +-1% .063W TKF TC0+-200	09891	RK73H1J1331F
R112	1810-1231	1	NET-RES 8 100.0 OHM 16-PIN	05524	SOMC16-03-101G
R113	0699-3924	1	RESISTOR 100 +-1% .063W TKF TC0+-200	00746	MCR03-F-1000
R114	0699-3924	1	RESISTOR 100 +-1% .063W TKF TC0+-200	00746	MCR03-F-1000
R115	0699-3932	1	RESISTOR 215 +-1% .063W TKF TC0+-200	00746	MCR03-F-2150
R116	0699-3932	1	RESISTOR 215 +-1% .063W TKF TC0+-200	00746	MCR03-F-2150
R117	0699-3932	1	RESISTOR 215 +-1% .063W TKF TC0+-200	00746	MCR03-F-2150
R118	0699-3951	1	RESISTOR 1.47K +-1% .063W TKF TC0+-200	00746	MCR03-F-1471
R119	0699-3950	1	RESISTOR 1.33K +-1% .063W TKF TC0+-200	09891	RK73H1J1331F

**Indicates factory-selected value*

Agilent Part Number E4401-60203
1.5 GHz RF (50 Ohm)

Reference Designator	Agilent Part Number	Qty	Description	Mgr Code	Mfr Part Number
R120	0699-3951	1	RESISTOR 1.47K +-1% .063W TKF TC0+-200	00746	MCR03-F-1471
R121	0699-3924	1	RESISTOR 100 +-1% .063W TKF TC0+-200	00746	MCR03-F-1000
R122	0699-3924	1	RESISTOR 100 +-1% .063W TKF TC0+-200	00746	MCR03-F-1000
R123	0699-3924	1	RESISTOR 100 +-1% .063W TKF TC0+-200	00746	MCR03-F-1000
R124	0699-3924	1	RESISTOR 100 +-1% .063W TKF TC0+-200	00746	MCR03-F-1000
R125	0699-3924	1	RESISTOR 100 +-1% .063W TKF TC0+-200	00746	MCR03-F-1000
R126	0699-3924	1	RESISTOR 100 +-1% .063W TKF TC0+-200	00746	MCR03-F-1000
R127	0699-3951	1	RESISTOR 1.47K +-1% .063W TKF TC0+-200	00746	MCR03-F-1471
R128	0699-3951	1	RESISTOR 1.47K +-1% .063W TKF TC0+-200	00746	MCR03-F-1471
R129	0699-3950	1	RESISTOR 1.33K +-1% .063W TKF TC0+-200	09891	RK73H1J1331F
R137	1810-1230	1	NET-RES 8 4.7K OHM 16-PIN	05524	SOMC-16-03-472G
R138	0699-3936	1	RESISTOR 316 +-1% .063W TKF TC0+-200	00746	MCR03-F-3160
R140	0699-3937	1	RESISTOR 348 +-1% .063W TKF TC0+-200	00746	MCR03-F-3480
R141	1810-1380	1	NET-RES 8 1.0K OHM 16-PIN	05524	SOMC1603-102G
R142	1810-1231	1	NET-RES 8 100.0 OHM 16-PIN	05524	SOMC16-03-101G
R143	0699-1422	1	RESISTOR 196 +-1% .125W TKF TC0+-100	09891	RK73H2BT1960F
R151	0699-3907	1	RESISTOR 17.8 +-1% .063W TKF TC0+-200	09891	RK73H1J17R8F
R152	0699-3935	1	RESISTOR 287 +-1% .063W TKF TC0+-200	00746	MCR03-F-2870
R153	0699-3935	1	RESISTOR 287 +-1% .063W TKF TC0+-200	00746	MCR03-F-2870
R154	1810-1231	1	NET-RES 8 100.0 OHM 16-PIN	05524	SOMC16-03-101G
R155	1810-1360	1	NET-RES 8 10.0K OHM 16-PIN	05524	SOMC-1603-103G
R156	0699-1355	1	RESISTOR 28.7 +-1% .125W TKF TC0+-100	09891	RK73H2BT28R7F
R157	0699-3964	1	RESISTOR 5.11K +-1% .063W TKF TC0+-200	09891	RK73H1J5111F
R158	0699-3918	1	RESISTOR 51.1 +-1% .063W TKF TC0+-200	00746	MCR03-F-51R1
R159	0699-3955	1	RESISTOR 2.15K +-1% .063W TKF TC0+-200	09891	RK73H1J2151F
R160	0699-3948	1	RESISTOR 1.1K +-1% .063W TKF TC0+-200	00746	MCR03-F-1101
R161	0699-3961	1	RESISTOR 3.83K +-1% .063W TKF TC0+-200	09891	RK73H1J3831F
R162	0699-3964	1	RESISTOR 5.11K +-1% .063W TKF TC0+-200	09891	RK73H1J5111F
R163	0699-3918	1	RESISTOR 51.1 +-1% .063W TKF TC0+-200	00746	MCR03-F-51R1
R164	0699-1355	1	RESISTOR 28.7 +-1% .125W TKF TC0+-100	09891	RK73H2BT28R7F

 **Indicates factory-selected value*

Agilent Part Number E4401-60203
1.5 GHz RF (50 Ohm)

Reference Designator	Agilent Part Number	Qty	Description	Mgr Code	Mfr Part Number
R165	0699-1346	1	RESISTOR 12.1 +-1% .125W TKF TC0+-100	05524	CRCW120612R1F
R166	0699-1347	1	RESISTOR 13.3 +-1% .125W TKF TC0+-100	09891	RK73H2BT13R3F
R168	0699-3951	1	RESISTOR 1.47K +-1% .063W TKF TC0+-200	00746	MCR03-F-1471
R169	0699-3918	1	RESISTOR 51.1 +-1% .063W TKF TC0+-200	00746	MCR03-F-51R1
R170	0699-3574	1	RESISTOR 0 .0625W TKF	09891	RM73Z1JT
R171	0699-4016	1	RESISTOR 1M +-1% .063W TKF TC0+-200	00746	MCR03-F-1004
R172	0699-3924	1	RESISTOR 100 +-1% .063W TKF TC0+-200	00746	MCR03-F-1000
R173	0699-3924	1	RESISTOR 100 +-1% .063W TKF TC0+-200	00746	MCR03-F-1000
R174	0699-3947	1	RESISTOR 1K +-1% .063W TKF TC0+-200	00746	MCR03-F-1001
R175	1810-1578	1	NET-RES 4 1.0K OHM 8-PIN	00746	MNR34K5ABJ102
R179	0699-3947	1	RESISTOR 1K +-1% .063W TKF TC0+-200	00746	MCR03-F-1001
R180	0699-3947	1	RESISTOR 1K +-1% .063W TKF TC0+-200	00746	MCR03-F-1001
R181	0698-3624	1	RESISTOR 150 +-5% 2W MO TC0+-200	02499	GS-31500
R182	0699-3970	1	RESISTOR 10K +-1% .063W TKF TC0+-200	09891	RK73H1J1002F
R183	0699-3954	1	RESISTOR 1.96K +-1% .063W TKF TC0+-200	09891	RK73H1J1961F
R184	0699-3970	1	RESISTOR 10K +-1% .063W TKF TC0+-200	09891	RK73H1J1002F
R185	0699-4558	1	RESISTOR 80K +-0.1% .125W TF TC0+-25	05524	TNPW1206803BT-9
R186	0699-4558	1	RESISTOR 80K +-0.1% .125W TF TC0+-25	05524	TNPW1206803BT-9
R187	0699-4558	1	RESISTOR 80K +-0.1% .125W TF TC0+-25	05524	TNPW1206803BT-9
R188	0699-4558	1	RESISTOR 80K +-0.1% .125W TF TC0+-25	05524	TNPW1206803BT-9
R189	0699-3937	1	RESISTOR 348 +-1% .063W TKF TC0+-200	00746	MCR03-F-3480
R190	0699-3937	1	RESISTOR 348 +-1% .063W TKF TC0+-200	00746	MCR03-F-3480
R191	0699-3937	1	RESISTOR 348 +-1% .063W TKF TC0+-200	00746	MCR03-F-3480
R192	0699-3937	1	RESISTOR 348 +-1% .063W TKF TC0+-200	00746	MCR03-F-3480
R193	0699-3941	1	RESISTOR 511 +-1% .063W TKF TC0+-200	00746	MCR03-F-5110
R195	0699-3970	1	RESISTOR 10K +-1% .063W TKF TC0+-200	09891	RK73H1J1002F
R196	0699-3964	1	RESISTOR 5.11K +-1% .063W TKF TC0+-200	09891	RK73H1J5111F
R197	0699-3918	1	RESISTOR 51.1 +-1% .063W TKF TC0+-200	00746	MCR03-F-51R1
R198	0699-3918	1	RESISTOR 51.1 +-1% .063W TKF TC0+-200	00746	MCR03-F-51R1
R199	0699-3961	1	RESISTOR 3.83K +-1% .063W TKF TC0+-200	09891	RK73H1J3831F

Agilent Part Number E4401-60203
1.5 GHz RF (50 Ohm)

Reference Designator	Agilent Part Number	Qty	Description	Mgr Code	Mfr Part Number
R200	0699-3970	1	RESISTOR 10K +-1% .063W TKF TC0+-200	09891	RK73H1J1002F
R201	0699-3970	1	RESISTOR 10K +-1% .063W TKF TC0+-200	09891	RK73H1J1002F
R202	0699-3939	1	RESISTOR 422 +-1% .063W TKF TC0+-200	09891	RK73H1J4220F
R203	0699-3970	1	RESISTOR 10K +-1% .063W TKF TC0+-200	09891	RK73H1J1002F
R204	0699-3918	1	RESISTOR 51.1 +-1% .063W TKF TC0+-200	00746	MCR03-F-51R1
R205	0699-3964	1	RESISTOR 5.11K +-1% .063W TKF TC0+-200	09891	RK73H1J5111F
R206	0699-3938	1	RESISTOR 383 +-1% .063W TKF TC0+-200	00746	MCR03-F-3830
R207	0699-3970	1	RESISTOR 10K +-1% .063W TKF TC0+-200	09891	RK73H1J1002F
R208	0699-3970	1	RESISTOR 10K +-1% .063W TKF TC0+-200	09891	RK73H1J1002F
R209	0699-3970	1	RESISTOR 10K +-1% .063W TKF TC0+-200	09891	RK73H1J1002F
R210	0699-3918	1	RESISTOR 51.1 +-1% .063W TKF TC0+-200	00746	MCR03-F-51R1
R211	0699-1436	1	RESISTOR 750 +-1% .125W TKF TC0+-100	09891	RK73H2BT7500F
R212	0699-3940	1	RESISTOR 464 +-1% .063W TKF TC0+-200	09891	RK73H1J4640F
R213	0699-3918	1	RESISTOR 51.1 +-1% .063W TKF TC0+-200	00746	MCR03-F-51R1
R214	0699-3941	1	RESISTOR 511 +-1% .063W TKF TC0+-200	00746	MCR03-F-5110
R215	0699-3964	1	RESISTOR 5.11K +-1% .063W TKF TC0+-200	09891	RK73H1J5111F
R216	0699-3910	1	RESISTOR 23.7 +-1% .063W TKF TC0+-200	09891	RK73H1J23R7F
R217	0699-3955	1	RESISTOR 2.15K +-1% .063W TKF TC0+-200	09891	RK73H1J2151F
R218	0699-3947	1	RESISTOR 1K +-1% .063W TKF TC0+-200	00746	MCR03-F-1001
R219	0699-3901	1	RESISTOR 10 +-1% .063W TKF TC0+-200	00746	MCR03-F-10R0
R220	0699-3938	1	RESISTOR 383 +-1% .063W TKF TC0+-200	00746	MCR03-F-3830
R221	0699-3934	1	RESISTOR 261 +-1% .063W TKF TC0+-200	09891	RK73H1J2610F
R222	0699-3938	1	RESISTOR 383 +-1% .063W TKF TC0+-200	00746	MCR03-F-3830
R223	0699-3938	1	RESISTOR 383 +-1% .063W TKF TC0+-200	00746	MCR03-F-3830
R224	0699-3947	1	RESISTOR 1K +-1% .063W TKF TC0+-200	00746	MCR03-F-1001
R225	0699-3960	1	RESISTOR 3.48K +-1% .063W TKF TC0+-200	09891	RK73H1J3481F
R226	0699-3918	1	RESISTOR 51.1 +-1% .063W TKF TC0+-200	00746	MCR03-F-51R1
R227	0699-3921	1	RESISTOR 75 +-1% .063W TKF TC0+-200	00746	MCR03-F-75R0
R228	0699-3924	1	RESISTOR 100 +-1% .063W TKF TC0+-200	00746	MCR03-F-1000
R229	0699-3918	1	RESISTOR 51.1 +-1% .063W TKF TC0+-200	00746	MCR03-F-51R1

 **Indicates factory-selected value*

Agilent Part Number E4401-60203
1.5 GHz RF (50 Ohm)

Reference Designator	Agilent Part Number	Qty	Description	Mgr Code	Mfr Part Number
R230	0699-3921	1	RESISTOR 75 +-1% .063W TKF TC0+-200	00746	MCR03-F-75R0
R231	0699-3928	1	RESISTOR 147 +-1% .063W TKF TC0+-200	00746	MCR03-F-1470
R232	0699-3950	1	RESISTOR 1.33K +-1% .063W TKF TC0+-200	09891	RK73H1J1331F
R233	0699-3931	1	RESISTOR 196 +-1% .063W TKF TC0+-200	09891	RK73H1J1960F
R234	0699-3975	1	RESISTOR 16.2K +-1% .063W TKF TC0+-200	09891	RK73H1J1622F
R235	0699-3961	1	RESISTOR 3.83K +-1% .063W TKF TC0+-200	09891	RK73H1J3831F
R236	0699-3970	1	RESISTOR 10K +-1% .063W TKF TC0+-200	09891	RK73H1J1002F
R237	0699-3950	1	RESISTOR 1.33K +-1% .063W TKF TC0+-200	09891	RK73H1J1331F
R238	0699-3928	1	RESISTOR 147 +-1% .063W TKF TC0+-200	00746	MCR03-F-1470
R239	0699-3931	1	RESISTOR 196 +-1% .063W TKF TC0+-200	09891	RK73H1J1960F
R240	0699-3975	1	RESISTOR 16.2K +-1% .063W TKF TC0+-200	09891	RK73H1J1622F
R241	0699-3961	1	RESISTOR 3.83K +-1% .063W TKF TC0+-200	09891	RK73H1J3831F
R242	0699-3970	1	RESISTOR 10K +-1% .063W TKF TC0+-200	09891	RK73H1J1002F
R243	0699-3924	1	RESISTOR 100 +-1% .063W TKF TC0+-200	00746	MCR03-F-1000
R244	0699-3944	1	RESISTOR 750 +-1% .063W TKF TC0+-200	09891	RK73H1J7500F
R245	0699-3941	1	RESISTOR 511 +-1% .063W TKF TC0+-200	00746	MCR03-F-5110
R246	0699-3918	1	RESISTOR 51.1 +-1% .063W TKF TC0+-200	00746	MCR03-F-51R1
R247	0699-3941	1	RESISTOR 511 +-1% .063W TKF TC0+-200	00746	MCR03-F-5110
R248	0699-3918	1	RESISTOR 51.1 +-1% .063W TKF TC0+-200	00746	MCR03-F-51R1
R249	0699-3944	1	RESISTOR 750 +-1% .063W TKF TC0+-200	09891	RK73H1J7500F
R250	0699-3918	1	RESISTOR 51.1 +-1% .063W TKF TC0+-200	00746	MCR03-F-51R1
R251	0699-3941	1	RESISTOR 511 +-1% .063W TKF TC0+-200	00746	MCR03-F-5110
R252	0699-3964	1	RESISTOR 5.11K +-1% .063W TKF TC0+-200	09891	RK73H1J5111F
R253	0699-3910	1	RESISTOR 23.7 +-1% .063W TKF TC0+-200	09891	RK73H1J23R7F
R254	0699-3969	1	RESISTOR 9.09K +-1% .063W TKF TC0+-200	09891	RK73H1J9091F
R255	0699-3918	1	RESISTOR 51.1 +-1% .063W TKF TC0+-200	00746	MCR03-F-51R1
R256	0699-3967	1	RESISTOR 7.5K +-1% .063W TKF TC0+-200	09891	RK73H1J7501F
R257	0699-3918	1	RESISTOR 51.1 +-1% .063W TKF TC0+-200	00746	MCR03-F-51R1
R258	0699-3941	1	RESISTOR 511 +-1% .063W TKF TC0+-200	00746	MCR03-F-5110
R259	0699-3964	1	RESISTOR 5.11K +-1% .063W TKF TC0+-200	09891	RK73H1J5111F

Agilent Part Number E4401-60203
1.5 GHz RF (50 Ohm)

Reference Designator	Agilent Part Number	Qty	Description	Mgr Code	Mfr Part Number
R260	0699-3910	1	RESISTOR 23.7 +-1% .063W TKF TC0+-200	09891	RK73H1J23R7F
R261	0699-3969	1	RESISTOR 9.09K +-1% .063W TKF TC0+-200	09891	RK73H1J9091F
R262	0699-3941	1	RESISTOR 511 +-1% .063W TKF TC0+-200	00746	MCR03-F-5110
R263	0699-3954	1	RESISTOR 1.96K +-1% .063W TKF TC0+-200	09891	RK73H1J1961F
R264	0699-3964	1	RESISTOR 5.11K +-1% .063W TKF TC0+-200	09891	RK73H1J5111F
R265	0699-3970	1	RESISTOR 10K +-1% .063W TKF TC0+-200	09891	RK73H1J1002F
R266	0699-3947	1	RESISTOR 1K +-1% .063W TKF TC0+-200	00746	MCR03-F-1001
R267	0699-3970	1	RESISTOR 10K +-1% .063W TKF TC0+-200	09891	RK73H1J1002F
R268	0699-3955	1	RESISTOR 2.15K +-1% .063W TKF TC0+-200	09891	RK73H1J2151F
R269	0699-3970	1	RESISTOR 10K +-1% .063W TKF TC0+-200	09891	RK73H1J1002F
R270	0699-1415	1	RESISTOR 100 +-1% .125W TKF TC0+-100	05524	CRCW12061000F
R271	0699-3918	1	RESISTOR 51.1 +-1% .063W TKF TC0+-200	00746	MCR03-F-51R1
R272	0699-3970	1	RESISTOR 10K +-1% .063W TKF TC0+-200	09891	RK73H1J1002F
R273	0699-3970	1	RESISTOR 10K +-1% .063W TKF TC0+-200	09891	RK73H1J1002F
R275	0699-3955	1	RESISTOR 2.15K +-1% .063W TKF TC0+-200	09891	RK73H1J2151F
R277	0699-3901	1	RESISTOR 10 +-1% .063W TKF TC0+-200	00746	MCR03-F-10R0
R278	0699-3964	1	RESISTOR 5.11K +-1% .063W TKF TC0+-200	09891	RK73H1J5111F
R279	0699-3948	1	RESISTOR 1.1K +-1% .063W TKF TC0+-200	00746	MCR03-F-1101
R280	0699-3942	1	RESISTOR 619 +-1% .063W TKF TC0+-200	00746	MCR03-F-6190
R282	0699-3942	1	RESISTOR 619 +-1% .063W TKF TC0+-200	00746	MCR03-F-6190
R283	0699-3947	1	RESISTOR 1K +-1% .063W TKF TC0+-200	00746	MCR03-F-1001
R284	0699-3956	1	RESISTOR 2.37K +-1% .063W TKF TC0+-200	09891	RK73H1J2371F
R285	0699-3942	1	RESISTOR 619 +-1% .063W TKF TC0+-200	00746	MCR03-F-6190
R287	0699-3942	1	RESISTOR 619 +-1% .063W TKF TC0+-200	00746	MCR03-F-6190
R288	0699-3956	1	RESISTOR 2.37K +-1% .063W TKF TC0+-200	09891	RK73H1J2371F
R290	0699-3951	1	RESISTOR 1.47K +-1% .063W TKF TC0+-200	00746	MCR03-F-1471
R291	0699-3993	1	RESISTOR 100K +-1% .063W TKF TC0+-200	09891	RK73H1J1003F
R292	0699-3976	1	RESISTOR 17.8K +-1% .063W TKF TC0+-200	09891	RK73H1J1782F
R293	0699-3945	1	RESISTOR 825 +-1% .063W TKF TC0+-200	00746	MCR03-F-8250
R294	0699-3947	1	RESISTOR 1K +-1% .063W TKF TC0+-200	00746	MCR03-F-1001

 **Indicates factory-selected value*

Agilent Part Number E4401-60203
1.5 GHz RF (50 Ohm)

Reference Designator	Agilent Part Number	Qty	Description	Mgr Code	Mfr Part Number
R295	0699-3939	1	RESISTOR 422 +-1% .063W TKF TC0+-200	09891	RK73H1J4220F
R297	0699-3932	1	RESISTOR 215 +-1% .063W TKF TC0+-200	00746	MCR03-F-2150
R298	0699-3918	1	RESISTOR 51.1 +-1% .063W TKF TC0+-200	00746	MCR03-F-51R1
R299	0699-3918	1	RESISTOR 51.1 +-1% .063W TKF TC0+-200	00746	MCR03-F-51R1
R300	0699-3993	1	RESISTOR 100K +-1% .063W TKF TC0+-200	09891	RK73H1J1003F
R301	0699-3963	1	RESISTOR 4.64K +-1% .063W TKF TC0+-200	09891	RK73H1J4641F
R302	0699-3981	1	RESISTOR 28.7K +-1% .063W TKF TC0+-200	09891	RK73H1J2872F
R303	0699-3970	1	RESISTOR 10K +-1% .063W TKF TC0+-200	09891	RK73H1J1002F
R304	0699-3970	1	RESISTOR 10K +-1% .063W TKF TC0+-200	09891	RK73H1J1002F
R305	0699-3976	1	RESISTOR 17.8K +-1% .063W TKF TC0+-200	09891	RK73H1J1782F
R306	0699-3951	1	RESISTOR 1.47K +-1% .063W TKF TC0+-200	00746	MCR03-F-1471
R307	0699-3951	1	RESISTOR 1.47K +-1% .063W TKF TC0+-200	00746	MCR03-F-1471
R308	0699-3976	1	RESISTOR 17.8K +-1% .063W TKF TC0+-200	09891	RK73H1J1782F
R309	0699-3970	1	RESISTOR 10K +-1% .063W TKF TC0+-200	09891	RK73H1J1002F
R310	0699-3970	1	RESISTOR 10K +-1% .063W TKF TC0+-200	09891	RK73H1J1002F
R311	0699-3970	1	RESISTOR 10K +-1% .063W TKF TC0+-200	09891	RK73H1J1002F
R312	0699-3970	1	RESISTOR 10K +-1% .063W TKF TC0+-200	09891	RK73H1J1002F
R313	0699-3984	1	RESISTOR 38.3K +-1% .063W TKF TC0+-200	09891	RK73H1J3832F
R314	0699-3984	1	RESISTOR 38.3K +-1% .063W TKF TC0+-200	09891	RK73H1J3832F
R315	0699-3993	1	RESISTOR 100K +-1% .063W TKF TC0+-200	09891	RK73H1J1003F
R316	0699-3964	1	RESISTOR 5.11K +-1% .063W TKF TC0+-200	09891	RK73H1J5111F
R317	0699-3990	1	RESISTOR 75K +-1% .063W TKF TC0+-200	09891	RK73H1J7502F
R318	0699-3973	1	RESISTOR 13.3K +-1% .063W TKF TC0+-200	09891	RK73H1J1332F
R319	0699-4010	1	RESISTOR 511K +-1% .063W TKF TC0+-200	09891	RK73H1J5113F
R320	0699-3970	1	RESISTOR 10K +-1% .063W TKF TC0+-200	09891	RK73H1J1002F
R321	0699-3972	1	RESISTOR 12.1K +-1% .063W TKF TC0+-200	09891	RK73H1J1212F
R322	0699-1374	1	RESISTOR 1.78K +-1% .125W TKF TC0+-100	09891	RK73H2BT1781F
R323	0699-3951	1	RESISTOR 1.47K +-1% .063W TKF TC0+-200	00746	MCR03-F-1471
R324	0699-3932	1	RESISTOR 215 +-1% .063W TKF TC0+-200	00746	MCR03-F-2150
R325	0699-3924	1	RESISTOR 100 +-1% .063W TKF TC0+-200	00746	MCR03-F-1000

Agilent Part Number E4401-60203
1.5 GHz RF (50 Ohm)

Reference Designator	Agilent Part Number	Qty	Description	Mgr Code	Mfr Part Number
R326	0699-3964	1	RESISTOR 5.11K +-1% .063W TKF TC0+-200	09891	RK73H1J5111F
R327	0699-3970	1	RESISTOR 10K +-1% .063W TKF TC0+-200	09891	RK73H1J1002F
R328	0699-1365	1	RESISTOR 75 +-1% .125W TKF TC0+-100	05524	CRCW120675R0F
R329	0699-3922	1	RESISTOR 82.5 +-1% .063W TKF TC0+-200	09891	RK73H1J82R5F
R330	0699-3929	1	RESISTOR 162 +-1% .063W TKF TC0+-200	09891	RK73H1J1620F
R331	0699-3913	1	RESISTOR 31.6 +-1% .063W TKF TC0+-200	09891	RK73H1J31R6F
R332	0699-1367	1	RESISTOR 90.9 +-1% .125W TKF TC0+-100	05524	CRCW120690R9F
R333	0699-1367	1	RESISTOR 90.9 +-1% .125W TKF TC0+-100	05524	CRCW120690R9F
R334	0699-1367	1	RESISTOR 90.9 +-1% .125W TKF TC0+-100	05524	CRCW120690R9F
R335	0699-1367	1	RESISTOR 90.9 +-1% .125W TKF TC0+-100	05524	CRCW120690R9F
R336	0699-1367	1	RESISTOR 90.9 +-1% .125W TKF TC0+-100	05524	CRCW120690R9F
R337	0699-1364	1	RESISTOR 68.1 +-1% .125W TKF TC0+-100	05524	CRCW120668R1F
R338	0699-1364	1	RESISTOR 68.1 +-1% .125W TKF TC0+-100	05524	CRCW120668R1F
R339	0699-1364	1	RESISTOR 68.1 +-1% .125W TKF TC0+-100	05524	CRCW120668R1F
R340	0699-1364	1	RESISTOR 68.1 +-1% .125W TKF TC0+-100	05524	CRCW120668R1F
R341	0699-3935	1	RESISTOR 287 +-1% .063W TKF TC0+-200	00746	MCR03-F-2870
R342	0699-3908	1	RESISTOR 19.6 +-1% .063W TKF TC0+-200	09891	RK73H1J19R6F
R343	0699-3947	1	RESISTOR 1K +-1% .063W TKF TC0+-200	00746	MCR03-F-1001
R344	0699-3907	1	RESISTOR 17.8 +-1% .063W TKF TC0+-200	09891	RK73H1J17R8F
R345	0699-3935	1	RESISTOR 287 +-1% .063W TKF TC0+-200	00746	MCR03-F-2870
R346	0699-3941	1	RESISTOR 511 +-1% .063W TKF TC0+-200	00746	MCR03-F-5110
R347	0699-3918	1	RESISTOR 51.1 +-1% .063W TKF TC0+-200	00746	MCR03-F-51R1
R348	0699-3918	1	RESISTOR 51.1 +-1% .063W TKF TC0+-200	00746	MCR03-F-51R1
R349	0699-3934	1	RESISTOR 261 +-1% .063W TKF TC0+-200	09891	RK73H1J2610F
R350	0699-3926	1	RESISTOR 121 +-1% .063W TKF TC0+-200	00746	MCR03-F-1210
R351	0699-3926	1	RESISTOR 121 +-1% .063W TKF TC0+-200	00746	MCR03-F-1210
R352	0699-3918	1	RESISTOR 51.1 +-1% .063W TKF TC0+-200	00746	MCR03-F-51R1
R353	0699-3941	1	RESISTOR 511 +-1% .063W TKF TC0+-200	00746	MCR03-F-5110
R354	0699-1365	1	RESISTOR 75 +-1% .125W TKF TC0+-100	05524	CRCW120675R0F
R355	0699-1365	1	RESISTOR 75 +-1% .125W TKF TC0+-100	05524	CRCW120675R0F

 **Indicates factory-selected value*

Agilent Part Number E4401-60203
1.5 GHz RF (50 Ohm)

Reference Designator	Agilent Part Number	Qty	Description	Mgr Code	Mfr Part Number
R356	0699-1365	1	RESISTOR 75 +-1% .125W TKF TC0+-100	05524	CRCW120675R0F
R357	0699-1365	1	RESISTOR 75 +-1% .125W TKF TC0+-100	05524	CRCW120675R0F
R358	0699-3916	1	RESISTOR 42.2 +-1% .063W TKF TC0+-200	09891	RK73H1J42R2F
R359	0699-3927	1	RESISTOR 133 +-1% .063W TKF TC0+-200	00746	MCR03-F-1330
R360	0699-3941	1	RESISTOR 511 +-1% .063W TKF TC0+-200	00746	MCR03-F-5110
R361	0699-1365	1	RESISTOR 75 +-1% .125W TKF TC0+-100	05524	CRCW120675R0F
R362	0699-1365	1	RESISTOR 75 +-1% .125W TKF TC0+-100	05524	CRCW120675R0F
R363	0699-1365	1	RESISTOR 75 +-1% .125W TKF TC0+-100	05524	CRCW120675R0F
R364	0699-1365	1	RESISTOR 75 +-1% .125W TKF TC0+-100	05524	CRCW120675R0F
R365	0699-3941	1	RESISTOR 511 +-1% .063W TKF TC0+-200	00746	MCR03-F-5110
R366	0699-3927	1	RESISTOR 133 +-1% .063W TKF TC0+-200	00746	MCR03-F-1330
R367	0699-3970	1	RESISTOR 10K +-1% .063W TKF TC0+-200	09891	RK73H1J1002F
R368	0699-3970	1	RESISTOR 10K +-1% .063W TKF TC0+-200	09891	RK73H1J1002F
R369	0699-3959	1	RESISTOR 3.16K +-1% .063W TKF TC0+-200	00746	MCR03-F-3161
R370	0699-3964	1	RESISTOR 5.11K +-1% .063W TKF TC0+-200	09891	RK73H1J5111F
R371	0699-3955	1	RESISTOR 2.15K +-1% .063W TKF TC0+-200	09891	RK73H1J2151F
R372	0699-3947	1	RESISTOR 1K +-1% .063W TKF TC0+-200	00746	MCR03-F-1001
R373	0699-3918	1	RESISTOR 51.1 +-1% .063W TKF TC0+-200	00746	MCR03-F-51R1
R374	0699-3941	1	RESISTOR 511 +-1% .063W TKF TC0+-200	00746	MCR03-F-5110
R375	0699-3970	1	RESISTOR 10K +-1% .063W TKF TC0+-200	09891	RK73H1J1002F
R376	0699-2829	1	RESISTOR 50 +-0.1% .125W TF TC0+-25	02499	W1206R030500BT
R377	0699-2840	1	RESISTOR 2.5K +-0.1% .125W TF TC0+-25	02499	W1206R032501BT
R378	0699-2840	1	RESISTOR 2.5K +-0.1% .125W TF TC0+-25	02499	W1206R032501BT
R379	0699-2829	1	RESISTOR 50 +-0.1% .125W TF TC0+-25	02499	W1206R030500BT
R380	0699-1361	1	RESISTOR 51.1 +-1% .125W TKF TC0+-100	05524	CRCW120651R1F
R381	0699-3982	1	RESISTOR 31.6K +-1% .063W TKF TC0+-200	09891	RK73H1J3162F
R382	0699-3978	1	RESISTOR 21.5K +-1% .063W TKF TC0+-200	09891	RK73H1J2152F
R383	0699-3924	1	RESISTOR 100 +-1% .063W TKF TC0+-200	00746	MCR03-F-1000
R384	0699-3947	1	RESISTOR 1K +-1% .063W TKF TC0+-200	00746	MCR03-F-1001
R385	0699-3944	1	RESISTOR 750 +-1% .063W TKF TC0+-200	09891	RK73H1J7500F

Agilent Part Number E4401-60203
1.5 GHz RF (50 Ohm)

Reference Designator	Agilent Part Number	Qty	Description	Mgr Code	Mfr Part Number
R386	0699-3918	1	RESISTOR 51.1 +-1% .063W TKF TC0+-200	00746	MCR03-F-51R1
R387	0699-3918	1	RESISTOR 51.1 +-1% .063W TKF TC0+-200	00746	MCR03-F-51R1
R388	0699-1427	1	RESISTOR 316 +-1% .125W TKF TC0+-100	09891	RK73H2BT3160F
R389	0699-1427	1	RESISTOR 316 +-1% .125W TKF TC0+-100	09891	RK73H2BT3160F
R390	0699-1427	1	RESISTOR 316 +-1% .125W TKF TC0+-100	09891	RK73H2BT3160F
R391	0699-3956	1	RESISTOR 2.37K +-1% .063W TKF TC0+-200	09891	RK73H1J2371F
R392	0699-3947	1	RESISTOR 1K +-1% .063W TKF TC0+-200	00746	MCR03-F-1001
R393	0699-3964	1	RESISTOR 5.11K +-1% .063W TKF TC0+-200	09891	RK73H1J5111F
R394	0699-3930	1	RESISTOR 178 +-1% .063W TKF TC0+-200	00746	MCR03-F-1780
R395	0699-3961	1	RESISTOR 3.83K +-1% .063W TKF TC0+-200	09891	RK73H1J3831F
R396	0699-3974	1	RESISTOR 14.7K +-1% .063W TKF TC0+-200	00746	MCR03-F-1472
R397	0699-1358	1	RESISTOR 38.3 +-1% .125W TKF TC0+-100	09891	RK73H2BT38R3F
R398	0699-1358	1	RESISTOR 38.3 +-1% .125W TKF TC0+-100	09891	RK73H2BT38R3F
R399	0699-1358	1	RESISTOR 38.3 +-1% .125W TKF TC0+-100	09891	RK73H2BT38R3F
R400	0699-3974	1	RESISTOR 14.7K +-1% .063W TKF TC0+-200	00746	MCR03-F-1472
R401	0699-1358	1	RESISTOR 38.3 +-1% .125W TKF TC0+-100	09891	RK73H2BT38R3F
R402	0699-1358	1	RESISTOR 38.3 +-1% .125W TKF TC0+-100	09891	RK73H2BT38R3F
R403	0699-3968	1	RESISTOR 8.25K +-1% .063W TKF TC0+-200	09891	RK73H1J8251F
R404	0699-3367	1	RESISTOR 5.62K +-1% .0625W TKF TC0+-200	00746	MCR03-F-5621
R405	0699-3907	1	RESISTOR 17.8 +-1% .063W TKF TC0+-200	09891	RK73H1J17R8F
R406	0699-3924	1	RESISTOR 100 +-1% .063W TKF TC0+-200	00746	MCR03-F-1000
R407	0699-3913	1	RESISTOR 31.6 +-1% .063W TKF TC0+-200	09891	RK73H1J31R6F
R408	0699-3961	1	RESISTOR 3.83K +-1% .063W TKF TC0+-200	09891	RK73H1J3831F
R409	0699-3964	1	RESISTOR 5.11K +-1% .063W TKF TC0+-200	09891	RK73H1J5111F
R410	0699-3930	1	RESISTOR 178 +-1% .063W TKF TC0+-200	00746	MCR03-F-1780
R411	0699-3961	1	RESISTOR 3.83K +-1% .063W TKF TC0+-200	09891	RK73H1J3831F
R412	0699-3941	1	RESISTOR 511 +-1% .063W TKF TC0+-200	00746	MCR03-F-5110
R413	0699-3974	1	RESISTOR 14.7K +-1% .063W TKF TC0+-200	00746	MCR03-F-1472
R414	0699-1358	1	RESISTOR 38.3 +-1% .125W TKF TC0+-100	09891	RK73H2BT38R3F
R415	0699-3970	1	RESISTOR 10K +-1% .063W TKF TC0+-200	09891	RK73H1J1002F

 **Indicates factory-selected value*

Agilent Part Number E4401-60203
1.5 GHz RF (50 Ohm)

Reference Designator	Agilent Part Number	Qty	Description	Mgr Code	Mfr Part Number
R416	0699-1358	1	RESISTOR 38.3 +-1% .125W TKF TC0+-100	09891	RK73H2BT38R3F
R417	0699-3974	1	RESISTOR 14.7K +-1% .063W TKF TC0+-200	00746	MCR03-F-1472
R418	0699-1358	1	RESISTOR 38.3 +-1% .125W TKF TC0+-100	09891	RK73H2BT38R3F
R419	0699-1358	1	RESISTOR 38.3 +-1% .125W TKF TC0+-100	09891	RK73H2BT38R3F
R420	0699-1358	1	RESISTOR 38.3 +-1% .125W TKF TC0+-100	09891	RK73H2BT38R3F
R421	0699-3964	1	RESISTOR 5.11K +-1% .063W TKF TC0+-200	09891	RK73H1J5111F
R422	0699-3964	1	RESISTOR 5.11K +-1% .063W TKF TC0+-200	09891	RK73H1J5111F
R423	0699-3924	1	RESISTOR 100 +-1% .063W TKF TC0+-200	00746	MCR03-F-1000
R424	0699-3935	1	RESISTOR 287 +-1% .063W TKF TC0+-200	00746	MCR03-F-2870
R425	0699-3961	1	RESISTOR 3.83K +-1% .063W TKF TC0+-200	09891	RK73H1J3831F
R426	0699-3913	1	RESISTOR 31.6 +-1% .063W TKF TC0+-200	09891	RK73H1J31R6F
R427	0699-3930	1	RESISTOR 178 +-1% .063W TKF TC0+-200	00746	MCR03-F-1780
R428	0699-3961	1	RESISTOR 3.83K +-1% .063W TKF TC0+-200	09891	RK73H1J3831F
R429	0699-3964	1	RESISTOR 5.11K +-1% .063W TKF TC0+-200	09891	RK73H1J5111F
R430	0699-3974	1	RESISTOR 14.7K +-1% .063W TKF TC0+-200	00746	MCR03-F-1472
R431	0699-1358	1	RESISTOR 38.3 +-1% .125W TKF TC0+-100	09891	RK73H2BT38R3F
R432	0699-1358	1	RESISTOR 38.3 +-1% .125W TKF TC0+-100	09891	RK73H2BT38R3F
R433	0699-1358	1	RESISTOR 38.3 +-1% .125W TKF TC0+-100	09891	RK73H2BT38R3F
R434	0699-3974	1	RESISTOR 14.7K +-1% .063W TKF TC0+-200	00746	MCR03-F-1472
R435	0699-1358	1	RESISTOR 38.3 +-1% .125W TKF TC0+-100	09891	RK73H2BT38R3F
R436	0699-1358	1	RESISTOR 38.3 +-1% .125W TKF TC0+-100	09891	RK73H2BT38R3F
R437	0699-3964	1	RESISTOR 5.11K +-1% .063W TKF TC0+-200	09891	RK73H1J5111F
R438	0699-3964	1	RESISTOR 5.11K +-1% .063W TKF TC0+-200	09891	RK73H1J5111F
R439	0699-3924	1	RESISTOR 100 +-1% .063W TKF TC0+-200	00746	MCR03-F-1000
R440	0699-3935	1	RESISTOR 287 +-1% .063W TKF TC0+-200	00746	MCR03-F-2870
R441	0699-3913	1	RESISTOR 31.6 +-1% .063W TKF TC0+-200	09891	RK73H1J31R6F
R442	0699-3961	1	RESISTOR 3.83K +-1% .063W TKF TC0+-200	09891	RK73H1J3831F
R443	0699-3941	1	RESISTOR 511 +-1% .063W TKF TC0+-200	00746	MCR03-F-5110
R444	0699-3947	1	RESISTOR 1K +-1% .063W TKF TC0+-200	00746	MCR03-F-1001
R445	0699-3929	1	RESISTOR 162 +-1% .063W TKF TC0+-200	09891	RK73H1J1620F

Agilent Part Number E4401-60203
1.5 GHz RF (50 Ohm)

Reference Designator	Agilent Part Number	Qty	Description	Mgr Code	Mfr Part Number
R446	0699-3964	1	RESISTOR 5.11K +-1% .063W TKF TC0+-200	09891	RK73H1J5111F
R447	0699-3903	1	RESISTOR 12.1 +-1% .063W TKF TC0+-200	09891	RK7H1J12R1F
R448	0699-3939	1	RESISTOR 422 +-1% .063W TKF TC0+-200	09891	RK73H1J4220F
R449	0699-3964	1	RESISTOR 5.11K +-1% .063W TKF TC0+-200	09891	RK73H1J5111F
R450	0699-3939	1	RESISTOR 422 +-1% .063W TKF TC0+-200	09891	RK73H1J4220F
R451	0699-3970	1	RESISTOR 10K +-1% .063W TKF TC0+-200	09891	RK73H1J1002F
R452	0699-3956	1	RESISTOR 2.37K +-1% .063W TKF TC0+-200	09891	RK73H1J2371F
R453	0699-3924	1	RESISTOR 100 +-1% .063W TKF TC0+-200	00746	MCR03-F-1000
R454	0699-3990	1	RESISTOR 75K +-1% .063W TKF TC0+-200	09891	RK73H1J7502F
R455	0699-3970	1	RESISTOR 10K +-1% .063W TKF TC0+-200	09891	RK73H1J1002F
R456	0699-3950	1	RESISTOR 1.33K +-1% .063W TKF TC0+-200	09891	RK73H1J1331F
R457	0699-3972	1	RESISTOR 12.1K +-1% .063W TKF TC0+-200	09891	RK73H1J1212F
R458	0699-3990	1	RESISTOR 75K +-1% .063W TKF TC0+-200	09891	RK73H1J7502F
R459	0699-3924	1	RESISTOR 100 +-1% .063W TKF TC0+-200	00746	MCR03-F-1000
R460	0699-3950	1	RESISTOR 1.33K +-1% .063W TKF TC0+-200	09891	RK73H1J1331F
R461	0699-1374	1	RESISTOR 1.78K +-1% .125W TKF TC0+-100	09891	RK73H2BT1781F
R462	0699-3932	1	RESISTOR 215 +-1% .063W TKF TC0+-200	00746	MCR03-F-2150
R463	0699-3970	1	RESISTOR 10K +-1% .063W TKF TC0+-200	09891	RK73H1J1002F
R464	0699-3929	1	RESISTOR 162 +-1% .063W TKF TC0+-200	09891	RK73H1J1620F
R465	0699-1363	1	RESISTOR 61.9 +-1% .125W TKF TC0+-100	05524	CRCW120661R9F
R466	0699-1416	1	RESISTOR 110 +-1% .125W TKF TC0+-100	05524	CRCW12061100F
R467	0699-1416	1	RESISTOR 110 +-1% .125W TKF TC0+-100	05524	CRCW12061100F
R468	0699-3918	1	RESISTOR 51.1 +-1% .063W TKF TC0+-200	00746	MCR03-F-51R1
R469	0699-3913	1	RESISTOR 31.6 +-1% .063W TKF TC0+-200	09891	RK73H1J31R6F
R470	0699-1416	1	RESISTOR 110 +-1% .125W TKF TC0+-100	05524	CRCW12061100F
R471	0699-1416	1	RESISTOR 110 +-1% .125W TKF TC0+-100	05524	CRCW12061100F
R472	0699-1416	1	RESISTOR 110 +-1% .125W TKF TC0+-100	05524	CRCW12061100F
R473	0699-3908	1	RESISTOR 19.6 +-1% .063W TKF TC0+-200	09891	RK73H1J19R6F
R474	0699-1358	1	RESISTOR 38.3 +-1% .125W TKF TC0+-100	09891	RK73H2BT38R3F
R475	0699-3941	1	RESISTOR 511 +-1% .063W TKF TC0+-200	00746	MCR03-F-5110

 **Indicates factory-selected value*

Agilent Part Number E4401-60203
1.5 GHz RF (50 Ohm)

Reference Designator	Agilent Part Number	Qty	Description	Mgr Code	Mfr Part Number
R476	0699-1358	1	RESISTOR 38.3 +-1% .125W TKF TC0+-100	09891	RK73H2BT38R3F
R477	0699-1358	1	RESISTOR 38.3 +-1% .125W TKF TC0+-100	09891	RK73H2BT38R3F
R478	0699-1358	1	RESISTOR 38.3 +-1% .125W TKF TC0+-100	09891	RK73H2BT38R3F
R479	0699-3920	1	RESISTOR 68.1 +-1% .063W TKF TC0+-200	09891	RK73H1J68R1F
R480	0699-3947	1	RESISTOR 1K +-1% .063W TKF TC0+-200	00746	MCR03-F-1001
R481	0699-3901	1	RESISTOR 10 +-1% .063W TKF TC0+-200	00746	MCR03-F-10R0
R482	0699-3901	1	RESISTOR 10 +-1% .063W TKF TC0+-200	00746	MCR03-F-10R0
R483	0699-3930	1	RESISTOR 178 +-1% .063W TKF TC0+-200	00746	MCR03-F-1780
R484	0699-1357	1	RESISTOR 34.8 +-1% .125W TKF TC0+-100	09891	RK73H2BT34R8F
R485	0699-1415	1	RESISTOR 100 +-1% .125W TKF TC0+-100	05524	CRCW12061000F
R486	0699-1357	1	RESISTOR 34.8 +-1% .125W TKF TC0+-100	09891	RK73H2BT34R8F
R487	0699-1357	1	RESISTOR 34.8 +-1% .125W TKF TC0+-100	09891	RK73H2BT34R8F
R488	0699-1415	1	RESISTOR 100 +-1% .125W TKF TC0+-100	05524	CRCW12061000F
R489	0699-1415	1	RESISTOR 100 +-1% .125W TKF TC0+-100	05524	CRCW12061000F
R490	0699-3926	1	RESISTOR 121 +-1% .063W TKF TC0+-200	00746	MCR03-F-1210
R491	0699-3916	1	RESISTOR 42.2 +-1% .063W TKF TC0+-200	09891	RK73H1J42R2F
R492	0699-1357	1	RESISTOR 34.8 +-1% .125W TKF TC0+-100	09891	RK73H2BT34R8F
R493	0699-1357	1	RESISTOR 34.8 +-1% .125W TKF TC0+-100	09891	RK73H2BT34R8F
R494	0699-1415	1	RESISTOR 100 +-1% .125W TKF TC0+-100	05524	CRCW12061000F
R495	0699-3926	1	RESISTOR 121 +-1% .063W TKF TC0+-200	00746	MCR03-F-1210
R496	0699-3964	1	RESISTOR 5.11K +-1% .063W TKF TC0+-200	09891	RK73H1J5111F
R497	0699-3948	1	RESISTOR 1.1K +-1% .063W TKF TC0+-200	00746	MCR03-F-1101
R498	0699-3942	1	RESISTOR 619 +-1% .063W TKF TC0+-200	00746	MCR03-F-6190
R499	0699-3942	1	RESISTOR 619 +-1% .063W TKF TC0+-200	00746	MCR03-F-6190
R500	0699-3963	1	RESISTOR 4.64K +-1% .063W TKF TC0+-200	09891	RK73H1J4641F
R501	0699-3942	1	RESISTOR 619 +-1% .063W TKF TC0+-200	00746	MCR03-F-6190
R502	0699-3942	1	RESISTOR 619 +-1% .063W TKF TC0+-200	00746	MCR03-F-6190
R503	0699-3963	1	RESISTOR 4.64K +-1% .063W TKF TC0+-200	09891	RK73H1J4641F
R504	0699-3955	1	RESISTOR 2.15K +-1% .063W TKF TC0+-200	09891	RK73H1J2151F
R505	0699-3955	1	RESISTOR 2.15K +-1% .063W TKF TC0+-200	09891	RK73H1J2151F

Agilent Part Number E4401-60203
1.5 GHz RF (50 Ohm)

Reference Designator	Agilent Part Number	Qty	Description	Mgr Code	Mfr Part Number
R506	0699-3918	1	RESISTOR 51.1 +-1% .063W TKF TC0+-200	00746	MCR03-F-51R1
R507	0699-3952	1	RESISTOR 1.62K +-1% .063W TKF TC0+-200	09891	RK73H1J1621F
R508	0699-3928	1	RESISTOR 147 +-1% .063W TKF TC0+-200	00746	MCR03-F-1470
R509	0699-3919	1	RESISTOR 61.9 +-1% .063W TKF TC0+-200	05524	CRCW060361R9F
R510	0699-3918	1	RESISTOR 51.1 +-1% .063W TKF TC0+-200	00746	MCR03-F-51R1
R511	0699-3963	1	RESISTOR 4.64K +-1% .063W TKF TC0+-200	09891	RK73H1J4641F
R512	0699-3970	1	RESISTOR 10K +-1% .063W TKF TC0+-200	09891	RK73H1J1002F
R513	0699-3952	1	RESISTOR 1.62K +-1% .063W TKF TC0+-200	09891	RK73H1J1621F
R514	0699-3964	1	RESISTOR 5.11K +-1% .063W TKF TC0+-200	09891	RK73H1J5111F
R515	0699-3574	1	RESISTOR 0 .0625W TKF	09891	RM73Z1JT
R516	0699-3964	1	RESISTOR 5.11K +-1% .063W TKF TC0+-200	09891	RK73H1J5111F
R517	0699-3941	1	RESISTOR 511 +-1% .063W TKF TC0+-200	00746	MCR03-F-5110
R518	0699-3918	1	RESISTOR 51.1 +-1% .063W TKF TC0+-200	00746	MCR03-F-51R1
R519	0699-3941	1	RESISTOR 511 +-1% .063W TKF TC0+-200	00746	MCR03-F-5110
R520	0699-3955	1	RESISTOR 2.15K +-1% .063W TKF TC0+-200	09891	RK73H1J2151F
R521	0699-3955	1	RESISTOR 2.15K +-1% .063W TKF TC0+-200	09891	RK73H1J2151F
R522	0699-3918	1	RESISTOR 51.1 +-1% .063W TKF TC0+-200	00746	MCR03-F-51R1
R523	0699-2827	1	RESISTOR 900 +-0.1% .125W TF TC0+-25	02499	W1206R039000BT
R524	0699-3955	1	RESISTOR 2.15K +-1% .063W TKF TC0+-200	09891	RK73H1J2151F
R525	0699-2829	1	RESISTOR 50 +-0.1% .125W TF TC0+-25	02499	W1206R030500BT
R526	0699-3939	1	RESISTOR 422 +-1% .063W TKF TC0+-200	09891	RK73H1J4220F
R527	0699-3903	1	RESISTOR 12.1 +-1% .063W TKF TC0+-200	09891	RK7H1J12R1F
R528	0699-3939	1	RESISTOR 422 +-1% .063W TKF TC0+-200	09891	RK73H1J4220F
R529	1810-1360	1	NET-RES 8 10.0K OHM 16-PIN	05524	SOMC-1603-103G
R530	0699-1422	1	RESISTOR 196 +-1% .125W TKF TC0+-100	09891	RK73H2BT1960F
R531	0699-1422	1	RESISTOR 196 +-1% .125W TKF TC0+-100	09891	RK73H2BT1960F
R532	0699-1422	1	RESISTOR 196 +-1% .125W TKF TC0+-100	09891	RK73H2BT1960F
R533	0699-3970	1	RESISTOR 10K +-1% .063W TKF TC0+-200	09891	RK73H1J1002F
R534	0699-3977	1	RESISTOR 19.6K +-1% .063W TKF TC0+-200	09891	RK73H1J1962F
R535	0699-3984	1	RESISTOR 38.3K +-1% .063W TKF TC0+-200	09891	RK73H1J3832F

 **Indicates factory-selected value*

Agilent Part Number E4401-60203
1.5 GHz RF (50 Ohm)

Reference Designator	Agilent Part Number	Qty	Description	Mgr Code	Mfr Part Number
R536	0699-3944	1	RESISTOR 750 +-1% .063W TKF TC0+-200	09891	RK73H1J7500F
R537	0699-3993	1	RESISTOR 100K +-1% .063W TKF TC0+-200	09891	RK73H1J1003F
R538	0699-3901	1	RESISTOR 10 +-1% .063W TKF TC0+-200	00746	MCR03-F-10R0
R539	0699-3970	1	RESISTOR 10K +-1% .063W TKF TC0+-200	09891	RK73H1J1002F
R540	0699-3924	1	RESISTOR 100 +-1% .063W TKF TC0+-200	00746	MCR03-F-1000
R541	0699-3924	1	RESISTOR 100 +-1% .063W TKF TC0+-200	00746	MCR03-F-1000
R542	0699-3924	1	RESISTOR 100 +-1% .063W TKF TC0+-200	00746	MCR03-F-1000
R543	0699-3924	1	RESISTOR 100 +-1% .063W TKF TC0+-200	00746	MCR03-F-1000
R544	0699-3914	1	RESISTOR 34.8 +-1% .063W TKF TC0+-200	00746	MCR03-F-34R8
R545	0699-3914	1	RESISTOR 34.8 +-1% .063W TKF TC0+-200	00746	MCR03-F-34R8
R546	0699-3941	1	RESISTOR 511 +-1% .063W TKF TC0+-200	00746	MCR03-F-5110
R547	0699-3951	1	RESISTOR 1.47K +-1% .063W TKF TC0+-200	00746	MCR03-F-1471
R548	0699-3932	1	RESISTOR 215 +-1% .063W TKF TC0+-200	00746	MCR03-F-2150
R549	0699-3914	1	RESISTOR 34.8 +-1% .063W TKF TC0+-200	00746	MCR03-F-34R8
R550	1810-1659	1	NET-RES 4 220.0 OHM 8-PIN	00746	MNR34K5ABJ221
R551	1810-1659	1	NET-RES 4 220.0 OHM 8-PIN	00746	MNR34K5ABJ221
R552	0699-3941	1	RESISTOR 511 +-1% .063W TKF TC0+-200	00746	MCR03-F-5110
R553	0699-3941	1	RESISTOR 511 +-1% .063W TKF TC0+-200	00746	MCR03-F-5110
R554	0699-3928	1	RESISTOR 147 +-1% .063W TKF TC0+-200	00746	MCR03-F-1470
R555	0699-3928	1	RESISTOR 147 +-1% .063W TKF TC0+-200	00746	MCR03-F-1470
R556	0699-3928	1	RESISTOR 147 +-1% .063W TKF TC0+-200	00746	MCR03-F-1470
R557	0699-1430	1	RESISTOR 422 +-1% .125W TKF TC0+-100	05524	CRCW12064220F
R558	0699-1430	1	RESISTOR 422 +-1% .125W TKF TC0+-100	05524	CRCW12064220F
R559	0699-3970	1	RESISTOR 10K +-1% .063W TKF TC0+-200	09891	RK73H1J1002F
R560	0699-3977	1	RESISTOR 19.6K +-1% .063W TKF TC0+-200	09891	RK73H1J1962F
R561	0699-3970	1	RESISTOR 10K +-1% .063W TKF TC0+-200	09891	RK73H1J1002F
R562	0699-3999	1	RESISTOR 178K +-1% .063W TKF TC0+-200	09891	RK73H1J1783F
R563	0699-3954	1	RESISTOR 1.96K +-1% .063W TKF TC0+-200	09891	RK73H1J1961F
R564	0699-3954	1	RESISTOR 1.96K +-1% .063W TKF TC0+-200	09891	RK73H1J1961F
R565	0699-3909	1	RESISTOR 21.5 +-1% .063W TKF TC0+-200	09891	RK73H1J21R5F

Agilent Part Number E4401-60203
1.5 GHz RF (50 Ohm)

Reference Designator	Agilent Part Number	Qty	Description	Mgr Code	Mfr Part Number
R566	0699-1361	1	RESISTOR 51.1 +-1% .125W TKF TC0+-100	05524	CRCW120651R1F
R567	0699-3973	1	RESISTOR 13.3K +-1% .063W TKF TC0+-200	09891	RK73H1J1332F
R568	0699-3901	1	RESISTOR 10 +-1% .063W TKF TC0+-200	00746	MCR03-F-10R0
R569	0699-3970	1	RESISTOR 10K +-1% .063W TKF TC0+-200	09891	RK73H1J1002F
R570	0699-3970	1	RESISTOR 10K +-1% .063W TKF TC0+-200	09891	RK73H1J1002F
R571	0699-3970	1	RESISTOR 10K +-1% .063W TKF TC0+-200	09891	RK73H1J1002F
R572	0699-3928	1	RESISTOR 147 +-1% .063W TKF TC0+-200	00746	MCR03-F-1470
R573	0699-3930	1	RESISTOR 178 +-1% .063W TKF TC0+-200	00746	MCR03-F-1780
R574	0699-3947	1	RESISTOR 1K +-1% .063W TKF TC0+-200	00746	MCR03-F-1001
R575	0699-3909	1	RESISTOR 21.5 +-1% .063W TKF TC0+-200	09891	RK73H1J21R5F
R576	0699-3955	1	RESISTOR 2.15K +-1% .063W TKF TC0+-200	09891	RK73H1J2151F
R577	0699-3964	1	RESISTOR 5.11K +-1% .063W TKF TC0+-200	09891	RK73H1J5111F
R578	0699-3941	1	RESISTOR 511 +-1% .063W TKF TC0+-200	00746	MCR03-F-5110
R579	0699-3918	1	RESISTOR 51.1 +-1% .063W TKF TC0+-200	00746	MCR03-F-51R1
R580	0699-3908	1	RESISTOR 19.6 +-1% .063W TKF TC0+-200	09891	RK73H1J19R6F
R581	0699-1422	1	RESISTOR 196 +-1% .125W TKF TC0+-100	09891	RK73H2BT1960F
R582	1810-1659	1	NET-RES 4 220.0 OHM 8-PIN	00746	MNR34K5ABJ221
R583	0699-3947	1	RESISTOR 1K +-1% .063W TKF TC0+-200	00746	MCR03-F-1001
R584	0699-3941	1	RESISTOR 511 +-1% .063W TKF TC0+-200	00746	MCR03-F-5110
R585	0699-3947	1	RESISTOR 1K +-1% .063W TKF TC0+-200	00746	MCR03-F-1001
R586	0699-3947	1	RESISTOR 1K +-1% .063W TKF TC0+-200	00746	MCR03-F-1001
R587	0699-3947	1	RESISTOR 1K +-1% .063W TKF TC0+-200	00746	MCR03-F-1001
R588	0699-3947	1	RESISTOR 1K +-1% .063W TKF TC0+-200	00746	MCR03-F-1001
R589	0699-3947	1	RESISTOR 1K +-1% .063W TKF TC0+-200	00746	MCR03-F-1001
R590	0699-3909	1	RESISTOR 21.5 +-1% .063W TKF TC0+-200	09891	RK73H1J21R5F
R591	0699-3918	1	RESISTOR 51.1 +-1% .063W TKF TC0+-200	00746	MCR03-F-51R1
R592	0699-3955	1	RESISTOR 2.15K +-1% .063W TKF TC0+-200	09891	RK73H1J2151F
R593	0699-3953	1	RESISTOR 1.78K +-1% .063W TKF TC0+-200	00746	MCR03-F-1781
R594	0699-3964	1	RESISTOR 5.11K +-1% .063W TKF TC0+-200	09891	RK73H1J5111F
R596	0699-3918	1	RESISTOR 51.1 +-1% .063W TKF TC0+-200	00746	MCR03-F-51R1

 **Indicates factory-selected value*

Agilent Part Number E4401-60203
1.5 GHz RF (50 Ohm)

Reference Designator	Agilent Part Number	Qty	Description	Mgr Code	Mfr Part Number
R603	0699-3939	1	RESISTOR 422 +-1% .063W TKF TC0+-200	09891	RK73H1J4220F
R604	0699-3903	1	RESISTOR 12.1 +-1% .063W TKF TC0+-200	09891	RK7H1J12R1F
R605	0699-3939	1	RESISTOR 422 +-1% .063W TKF TC0+-200	09891	RK73H1J4220F
R606	1810-1660	1	NET-RES 4 3.3K OHM 8-PIN	00746	MNR34K5ABJ332
R607	0699-3960	1	RESISTOR 3.48K +-1% .063W TKF TC0+-200	09891	RK73H1J3481F
R608	0699-4016	1	RESISTOR 1M +-1% .063W TKF TC0+-200	00746	MCR03-F-1004
R609	0699-3939	1	RESISTOR 422 +-1% .063W TKF TC0+-200	09891	RK73H1J4220F
R610	0699-3907	1	RESISTOR 17.8 +-1% .063W TKF TC0+-200	09891	RK73H1J17R8F
R611	0699-3901	1	RESISTOR 10 +-1% .063W TKF TC0+-200	00746	MCR03-F-10R0
R612	0699-3574	1	RESISTOR 0 .0625W TKF	09891	RM73Z1JT
R613	0699-1422	1	RESISTOR 196 +-1% .125W TKF TC0+-100	09891	RK73H2BT1960F
U1	1826-1838	1	IC PWR MGT-V-REF-FXD 4.95/5.05V 8 PINS	10858	LT1021DCS8-5
U2	E4401-80030	1	RF CNTL PLD	28480	E4401-80030
U3	E4401-80091	1		28480	E4401-80091
U4	1820-5804	1	IC SHF-RGTR CMOS/HC SYNC/ASYNC	01698	SN74HC165D
U5	1820-6277	1	IC SHF-RGTR CMOS/HC SYNC/ASYNC SERIAL-IN	02237	MM74HC595M
U6	1820-6277	1	IC SHF-RGTR CMOS/HC SYNC/ASYNC SERIAL-IN	02237	MM74HC595M
U7	1820-6277	1	IC SHF-RGTR CMOS/HC SYNC/ASYNC SERIAL-IN	02237	MM74HC595M
U8	1820-6277	1	IC SHF-RGTR CMOS/HC SYNC/ASYNC SERIAL-IN	02237	MM74HC595M
U9	1820-6277	1	IC SHF-RGTR CMOS/HC SYNC/ASYNC SERIAL-IN	02237	MM74HC595M
U10	1820-6277	1	IC SHF-RGTR CMOS/HC SYNC/ASYNC SERIAL-IN	02237	MM74HC595M
U11	1820-6277	1	IC SHF-RGTR CMOS/HC SYNC/ASYNC SERIAL-IN	02237	MM74HC595M
U12	1858-0104	1	TRANSISTOR ARRAY 16-PIN PLSTC SURFACE	01698	ULN2003AD
U13	1826-1458	1	D/A 8-DGT 16-P-SOIC	02910	DAC-08ED

Agilent Part Number E4401-60203
1.5 GHz RF (50 Ohm)

Reference Designator	Agilent Part Number	Qty	Description	Mgr Code	Mfr Part Number
U14	1826-1458	1	D/A 8-DGT 16-P-SOIC	02910	DAC-08ED
U15	1826-1458	1	D/A 8-DGT 16-P-SOIC	02910	DAC-08ED
U16	1826-1458	1	D/A 8-DGT 16-P-SOIC	02910	DAC-08ED
U17	1826-1687	1	IC PWR MGT-V-REF-FXD 9.95/10.05V 8 PINS	10858	LT1021DCS8-10
U18	1826-1862	1	IC OP AMP LOW-BIAS-H-IMPD DUAL 8 PIN	04078	TL072CD
U19	1820-4966	1	IC FF CMOS/HC D-TYPE POS-EDGE-TRIG	01698	SN74HC74D
U20	1820-5562	1	IC GATE CMOS/HC NOR QUAD 2-INP	02910	74HC02D
U21	1826-2349	1	IC RF/IF AMPL LOW-NOISE 4 PIN	01542	INA-10386
U22	1826-1622	1	IC OP AMP LOW-BIAS-H-IMPD QUAD 14 PIN	01698	TL074CD
U23	1818-5997	1	IC 16K-BIT EEPROM 500-NS CMOS	13492	CAT35C116S (UNPRGMD)
U25	1826-1622	1	IC OP AMP LOW-BIAS-H-IMPD QUAD 14 PIN	01698	TL074CD
U26	1826-1458	1	D/A 8-DGT 16-P-SOIC	02910	DAC-08ED
U27	1826-1687	1	IC PWR MGT-V-REF-FXD 9.95/10.05V 8 PINS	10858	LT1021DCS8-10
U28	1826-1458	1	D/A 8-DGT 16-P-SOIC	02910	DAC-08ED
U29	1826-1862	1	IC OP AMP LOW-BIAS-H-IMPD DUAL 8 PIN	04078	TL072CD
U31	1826-1862	1	IC OP AMP LOW-BIAS-H-IMPD DUAL 8 PIN	04078	TL072CD
U33	1820-5753	1	IC MUXR/DATA-SEL 4-TO-1-LINE 16-SOIC	02910	74HC253D
U34	1820-5950	1	IC INV CMOS/AC HEX 14-SOIC	01698	SN74AC04AD
U35	1826-2513	1	D/A 8-BIT 20-P-SOIC CMOS	03285	DAC-8229FS
U36	1826-3000	1	IC AUDIO AMPL LOW-NOISE DUAL 8 PIN	03285	OP275GS
U37	1826-3000	1	IC AUDIO AMPL LOW-NOISE DUAL 8 PIN	03285	OP275GS
U38	1826-3000	1	IC AUDIO AMPL LOW-NOISE DUAL 8 PIN	03285	OP275GS
U39	1820-5937	1	IC FF CMOS/AC D-TYPE POS-EDGE-TRIG	02237	74AC74SC.
U40	1820-5945	1	IC GATE CMOS/AC NAND QUAD 2-INP	36633	MC74AC00D
U41	1826-1572	1	IC COMPARATOR PRCN DUAL 8 PIN PLSTC-SOIC	02910	LM393D
U42	1820-5937	1	IC FF CMOS/AC D-TYPE POS-EDGE-TRIG	02237	74AC74SC.
U43	1826-1925	1	IC OP AMP LOW-NOISE SINGLE 8 PIN	03285	OP-27GS
U44	1826-1528	1	IC COMPARATOR LP QUAD 14 PIN PLSTC-SOIC	03406	LM339M

 **Indicates factory-selected value*

Agilent Part Number E4401-60203
1.5 GHz RF (50 Ohm)

Reference Designator	Agilent Part Number	Qty	Description	Mgr Code	Mfr Part Number
U45	1826-1925	1	IC OP AMP LOW-NOISE SINGLE 8 PIN	03285	OP-27GS
U46	1826-1572	1	IC COMPARATOR PRCN DUAL 8 PIN PLSTC-SOIC	02910	LM393D
U47	1826-2888	1	IC TEMP XDCR PRCN SINGLE 8 PIN	03406	LM335AM
U48	1826-2349	1	IC RF/IF AMPL LOW-NOISE 4 PIN	01542	INA-10386
U49	1826-2175	1	IC RF/IF AMPL SINGLE 4 PIN U-WAVE-PILL	01542	MSA-0386-TR1
U50	1826-2175	1	IC RF/IF AMPL SINGLE 4 PIN U-WAVE-PILL	01542	MSA-0386-TR1
U51	1821-2085	1	IC PRESCR ECL SELECTABLE 8-SOIC	28480	1821-2085
U52	1820-5938	1	IC GATE CMOS/ACT NAND QUAD 2-INP	01698	SN74ACT00D
U53	1821-4291	1	IC-ASIC CL-BSD CMOS 64046 PLCC	02037	SC64046FN
U54	1826-1402	1	IC PWR MGT-V-REG-FXD-POS 4.8/5.2V 8 PINS	03406	LM78L05ACM
U55	1821-1821	1	IC-ASIC GT-ARY 60K GATES CMOS 60081	08779	M60081L-0124FP
U56	1826-2147	1	ANALOG MULTIPLEXER 8 CHNL 16 -P-SOIC	05524	DG408DY
U57	1826-1925	1	IC OP AMP LOW-NOISE SINGLE 8 PIN	03285	OP-27GS
U58	1826-2133	1	IC RF/IF AMPL WB 4 PIN U-WAVE-PILL	01542	MSA-1105
U59	1826-3357	1	IC RF/IF AMPL LOW-NOISE 6 PIN	01542	MGA-87563
U60	1826-2133	1	IC RF/IF AMPL WB 4 PIN U-WAVE-PILL	01542	MSA-1105
U61	1826-3358	1	IC RF/IF AMPL LOW-NOISE 6 PIN	01542	MGA-86563
U62	1826-2133	1	IC RF/IF AMPL WB 4 PIN U-WAVE-PILL	01542	MSA-1105
U63	1826-3358	1	IC RF/IF AMPL LOW-NOISE 6 PIN	01542	MGA-86563
U64	1826-3358	1	IC RF/IF AMPL LOW-NOISE 6 PIN	01542	MGA-86563
U65	1826-2888	1	IC TEMP XDCR PRCN SINGLE 8 PIN	03406	LM335AM
U66	1826-2717	1	IC RF/IF AMPL 4 PIN U-WAVE-PILL	01542	MSA-0886
U67	1826-2133	1	IC RF/IF AMPL WB 4 PIN U-WAVE-PILL	01542	MSA-1105
U68	1826-2204	1	IC RF/IF AMPL SINGLE 4 PIN U-WAVE-PILL	01542	MSA-0686
U69	1820-5945	1	IC GATE CMOS/AC NAND QUAD 2-INP	36633	MC74AC00D
U71	1820-5937	1	IC FF CMOS/AC D-TYPE POS-EDGE-TRIG	02237	74AC74SC.
U72	1826-1925	1	IC OP AMP LOW-NOISE SINGLE 8 PIN	03285	OP-27GS
U73	1826-3000	1	IC AUDIO AMPL LOW-NOISE DUAL 8 PIN	03285	OP275GS
U74	1821-2086	1	IC PRESCALER ECL 8-SOIC	02037	MC12026AD

**Indicates factory-selected value*

Agilent Part Number E4401-60203
1.5 GHz RF (50 Ohm)

Reference Designator	Agilent Part Number	Qty	Description	Mgr Code	Mfr Part Number
U75	1820-5938	1	IC GATE CMOS/ACT NAND QUAD 2-INP	01698	SN74ACT00D
U76	1820-7218	1	IC CNTR CMOS/AC BIN SYNCHRO	02237	74AC163SCX.
U78	1826-1985	1	ANALOG SWITCH 4 SPST 16 -P-SOIC	05524	DG411DY
U80	1826-1687	1	IC PWR MGT-V-REF-FXD 9.95/10.05V 8 PINS	10858	LT1021DCS8-10
U81	1826-2133	1	IC RF/IF AMPL WB 4 PIN U-WAVE-PILL	01542	MSA-1105
U82	1826-2261	1	IC TEMP XDCR PRCN SINGLE 8 PIN	03406	LM35DM
U83	1826-1810	1	IC OP AMP LOW-BIAS-H-IMPD SINGLE 8 PIN	01698	TL071CD
U84	1821-4614	1	IC GATE CMOS/AHCT EXCL-OR 2-INP	01698	SN74AHCT1G86DBV
U85	1821-4614	1	IC GATE CMOS/AHCT EXCL-OR 2-INP	01698	SN74AHCT1G86DBV
Y1	0410-0405	1	PRECISION BULK MODE-AT CRYSTAL QUARTZ	04458	BK3-1B-10MHZ
Z1	0955-0986	1	U-WAVE MIXER 2.43 GHZ MAX	02739	CRMS-24MH-1
Z10	0955-0951	1	TUN-SCR-ASSY TUNING SCREW ASSEMBLY FOR	05505	6925-4
Z11	0955-0951	1	TUN-SCR-ASSY TUNING SCREW ASSEMBLY FOR	05505	6925-4
Z12	0955-0951	1	TUN-SCR-ASSY TUNING SCREW ASSEMBLY FOR	05505	6925-4
Z13	0955-0951	1	TUN-SCR-ASSY TUNING SCREW ASSEMBLY FOR	05505	6925-4
Z14	0955-0951	1	TUN-SCR-ASSY TUNING SCREW ASSEMBLY FOR	05505	6925-4

 **Indicates factory-selected value*

5300 D-E4401-60203-2

SYM	REVISIONS	APPROVED	DATE
A	AS ISSUED, ECO 53-14155 /RS		

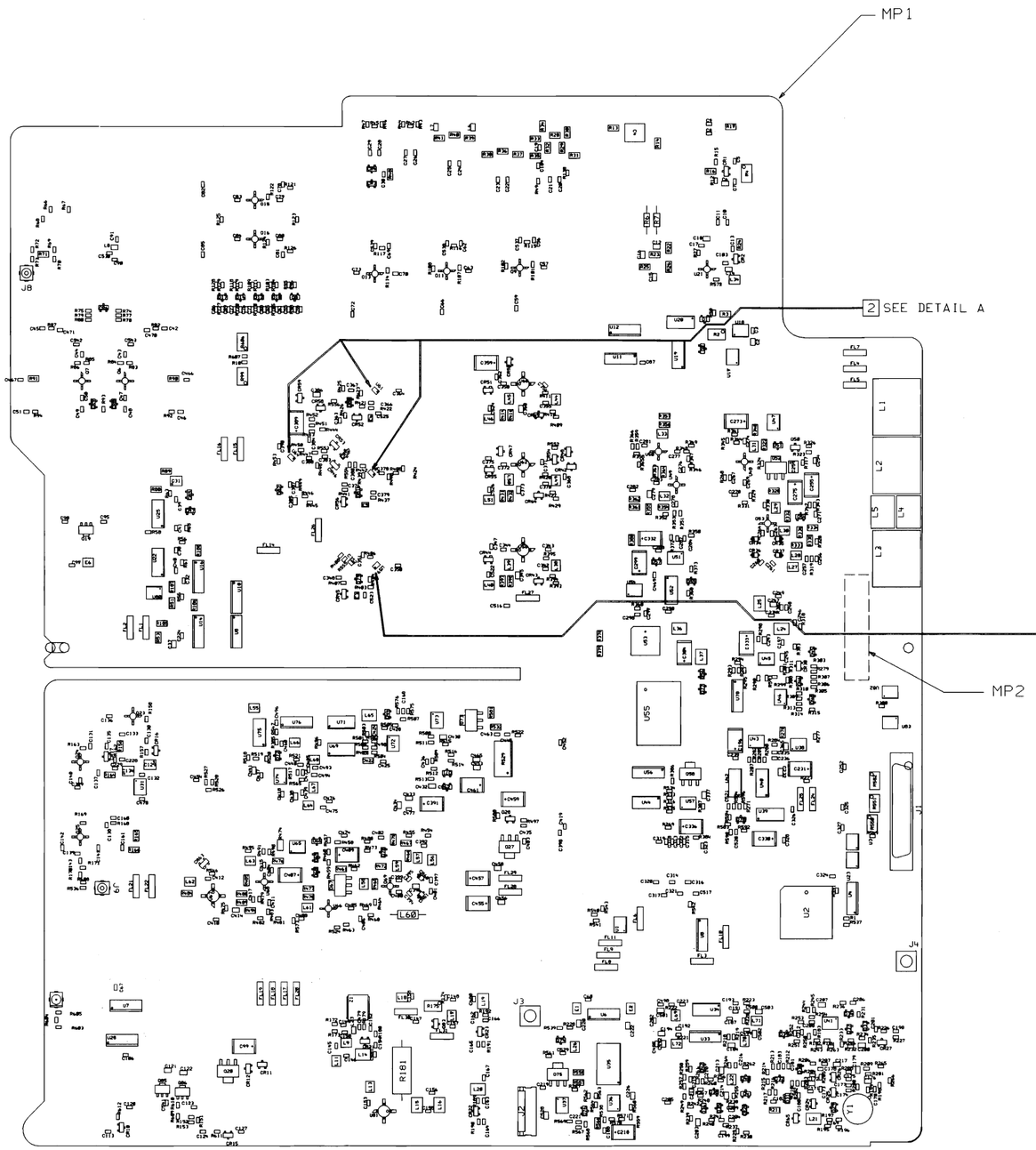

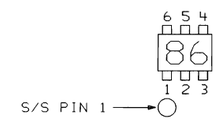

DETAIL A

U61 U63 U64

NOTE2

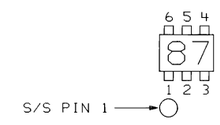

DETAIL B

U59

NOTE3

NOTE: (UNLESS OTHERWISE NOTED)

1 USE RAW BOARD E4401-20203

2 INSTALL U61,U63,U64 WITH MARKING (86)
AND SILKSCREEN DOT AS SHOWN
PLEASE VERIFY POLARITY WHEN PLACING THESE IC'S

3 INSTALL U59 WITH MARKING (87)
AND SILKSCREEN DOT AS SHOWN

4 PART NUMBER 9135-0461 (FL1-31) MUST NOT
BE EXPOSED TO HALIDE CONTAINING ACID FLUXES.

TOP SIDE

FOR MATERIAL LIST SEE E4401-60203

AGILENT TECHNOLOGIES
RESTRICTED
THIS DOCUMENT CONTAINS CONFIDENTIAL, PROPRIETARY INFORMATION THAT IS AGILENT TECHNOLOGIES PROPERTY. DO NOT DISCLOSE TO OR DUPLICATE FOR OTHERS EXCEPT AS AUTHORIZED BY AGILENT TECHNOLOGIES.

UNLESS OTHERWISE SPECIFIED, DIMENSIONS ARE IN INCHES.
TOLERANCES: XX.XXX ±.010
XX.XX ±.02
THIRD ANGLE PROJECTION
DO NOT SCALE THIS DRAWING

DRAWN BY	DATE
ENGINEER/CHECKER	DATE
RELEASE TO PROD.	DATE
SUPERSEDES DWG.	

ASSEMBLY, PWB
E4401A ESA 1500
1.5 GHz RF
Board Assembly
TITLE

FILENAME alaea203	Agilent Technologies
SCALE NONE	
SHEET 1 OF 2	PART NUMBER E4401-60203
D-E4401-60203-2	

5300 D-E4401-60203-2

SYM	REVISIONS	APPROVED	DATE
	SEE SHEET 1		

SOLDER RELAY K1 THRU K7
TO PC BOARD IN AREA WHERE
SOLDERMASK IS RELIEVED.
SOLDER MASK IS RELIEVED
OPPOSITE TAB.

7 PLACES

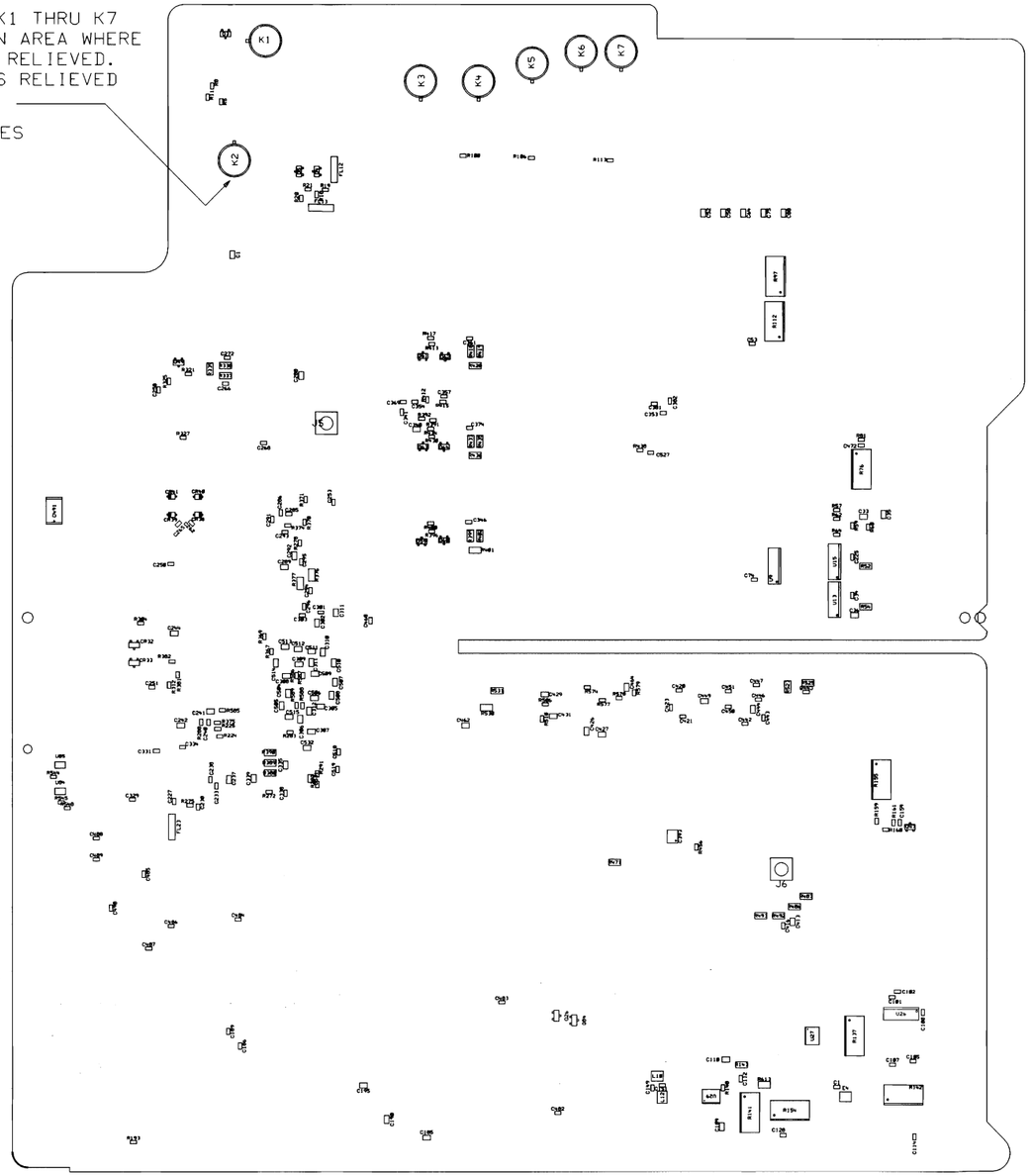

BOTTOM SIDE

AGILENT TECHNOLOGIES
RESTRICTED
THIS DOCUMENT CONTAINS CONFIDENTIAL, PROPRIETARY INFORMATION THAT IS AGILENT TECHNOLOGIES PROPERTY. DO NOT DISCLOSE TO OR DUPLICATE FOR OTHERS EXCEPT AS AUTHORIZED BY AGILENT TECHNOLOGIES.

UNLESS OTHERWISE SPECIFIED, DIMENSIONS ARE IN INCHES.
TOLERANCES: XX.XXX ±.010, XX.XX ±.02
THIRD ANGLE PROJECTION
DO NOT SCALE THIS DRAWING

DRAWN BY — DATE
ENGINEER/CHECKER — DATE
RELEASE TO PROD. — DATE
SUPERSEDES DWG.

ASSEMBLY, PWB
E4401A ESA 1500
1.5 GHz RF
Board Assembly
TITLE

a6aea203 FILENAME
NONE SCALE
2 OF 2 SHEET
E4401-60203 PART NUMBER
D-E4401-60203-2

Agilent Technologies

D-E4401-60203-1

REV	INFORMATION	APPROVED	DATE
A	AS ISSUED, ECO S3-14155 /RS		

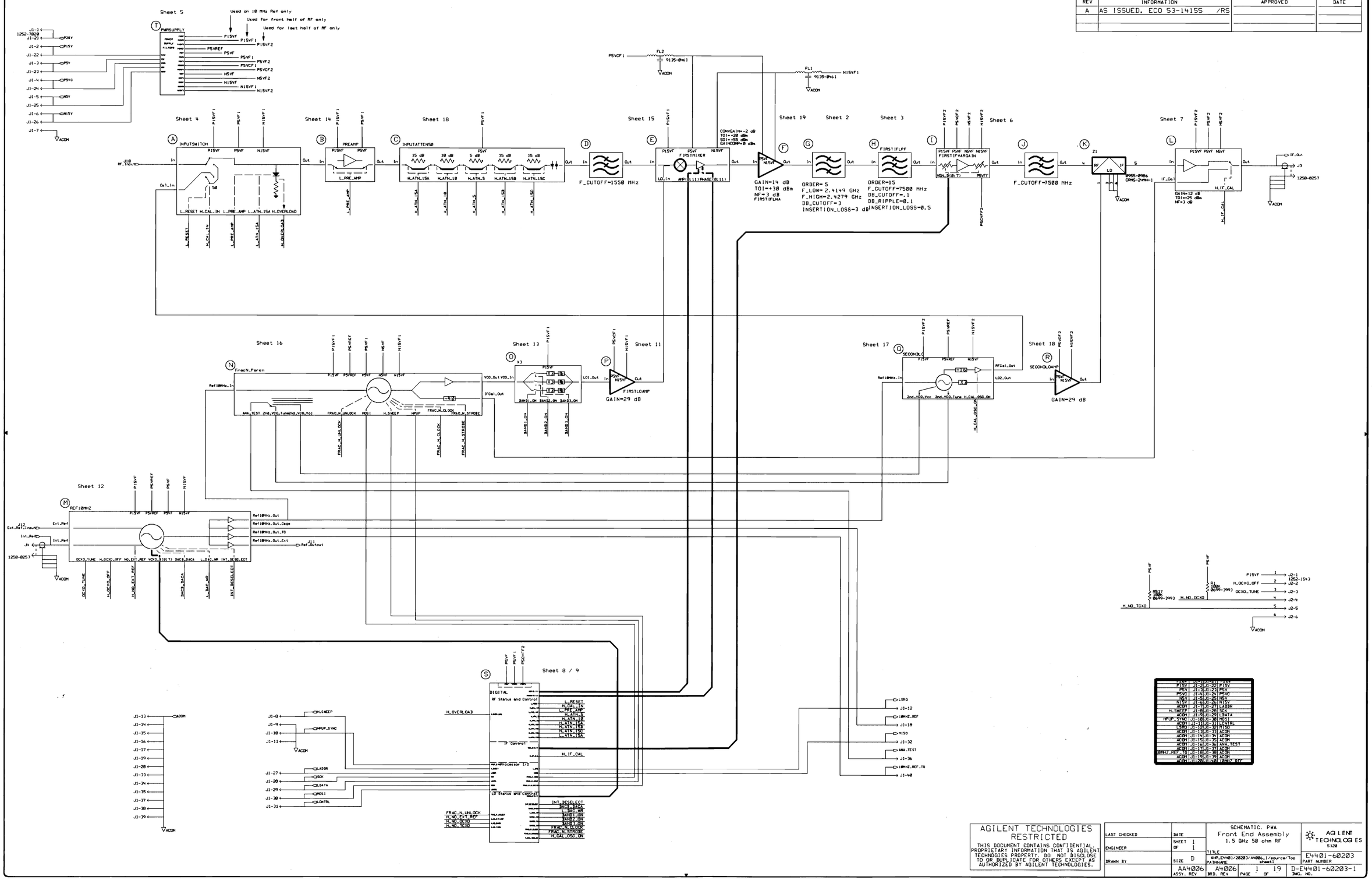

AGILENT TECHNOLOGIES
RESTRICTED
THIS DOCUMENT CONTAINS CONFIDENTIAL, PROPRIETARY INFORMATION THAT IS AGILENT TECHNOGIES PROPERTY. DO NOT DISCLOSE TO OR DUPLICATE FOR OTHERS EXCEPT AS AUTHORIZED BY AGILENT TECHNOLOGIES.

LAST CHECKED	DATE	SCHEMATIC. PWA Front End Assembly 1.5 GHz 50 ohm RF	AGILENT TECHNOLOGIES 5120
ENGINEER	SHEET 1 OF 1	TITLE	E4401-60203
DRAWN BY	SIZE D	PATHNAME BMP_E4401/20203/A4006.1/source/Top sheet1	PART NUMBER
	AA4006 ASSY. REV	A4006 BRD. REV / PAGE 1 OF 19	D-E4401-60203-1 DWG. NO.

REVISIONS
SEE PAGE 1 FOR REVISION HISTORY

OSMT Connectors can be added for testing
The resistors that make up pad should be removed

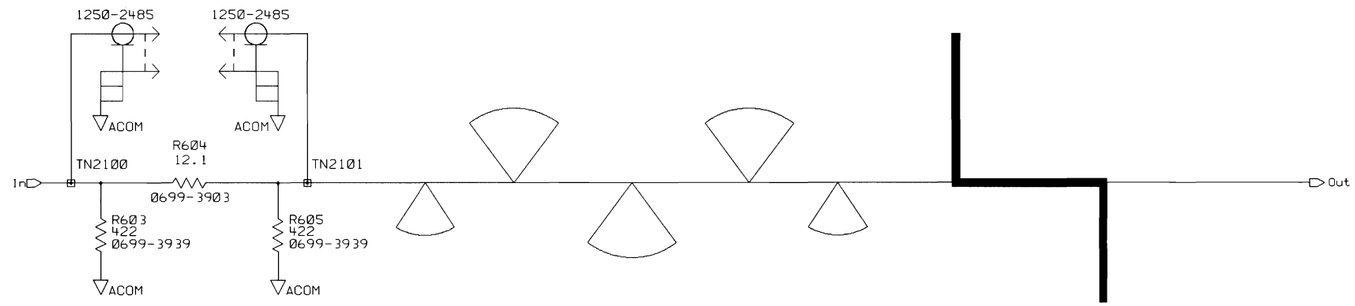

AGILENT TECHNOLOGIES
RESTRICTED

THIS DOCUMENT CONTAINS CONFIDENTIAL, PROPRIETARY INFORMATION THAT IS AGILENT TECHNOGIES PROPERTY. DO NOT DISCLOSE TO OR DUPLICATE FOR OTHERS EXCEPT AS AUTHORIZED BY AGILENT TECHNOLOGIES.

LAST CHECKED	DATE	SCHEMATIC, PWA Front End Assembly 1.5 GHz 50 ohm RF	AGILENT TECHNOLOGIES 5320
ENGINEER	SHEET 1 OF 1	TITLE	
DRAWN BY	SIZE B	$HP_E4401/20203/A4006_1/firstiflpf sheet1 PATHNAME	E4401-60203 PART NUMBER
	AA4006 ASSY. REV	A4006 BRD. REV PAGE 3 OF 19	B-E4401-60203-1 DWG. NO.

REVISIONS
SEE PAGE 1 FOR REVISION HISTORY

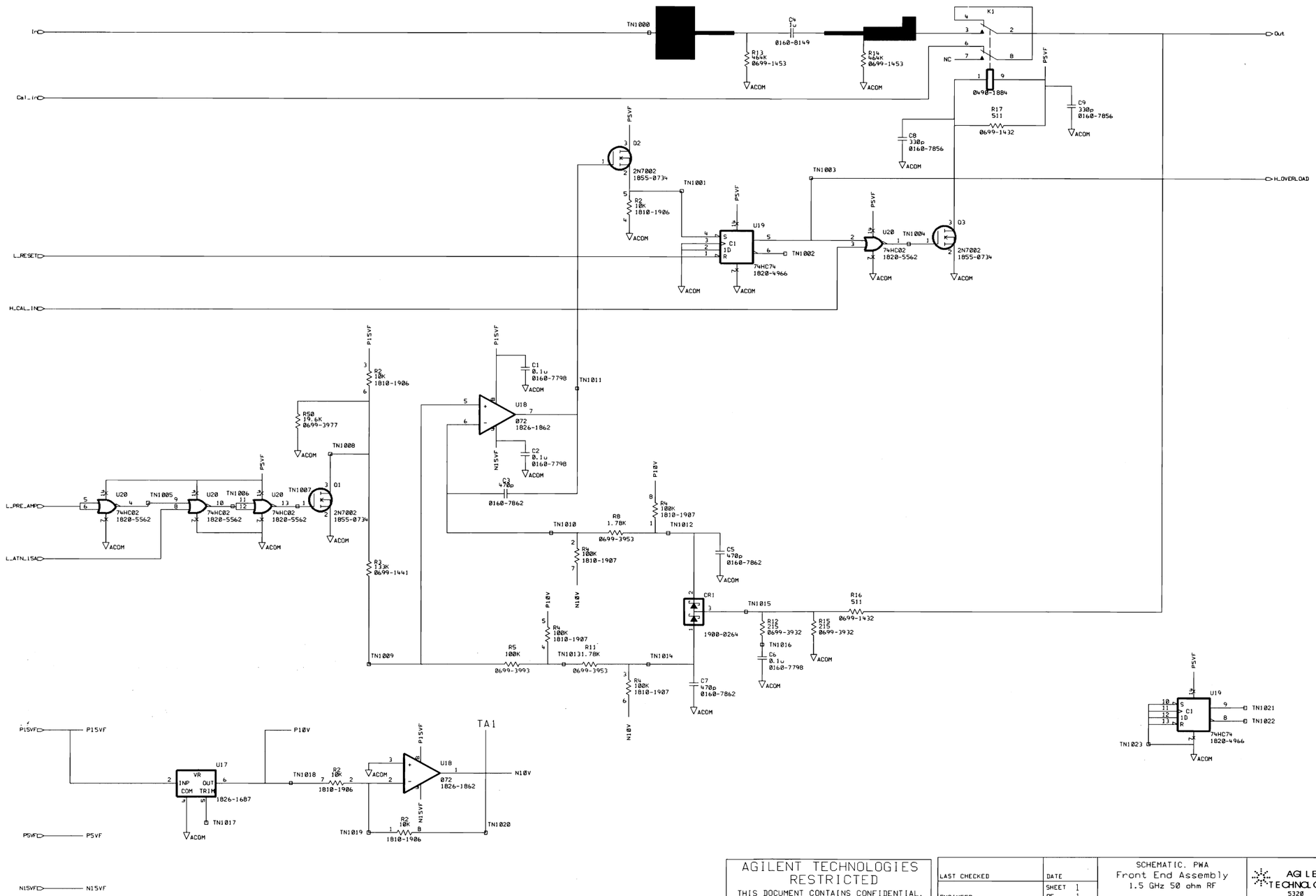

AGILENT TECHNOLOGIES RESTRICTED				
THIS DOCUMENT CONTAINS CONFIDENTIAL PROPRIETARY INFORMATION THAT IS AGILENT TECHNOGIES PROPERTY. DO NOT DISCLOSE TO OR DUPLICATE FOR OTHERS EXCEPT AS AUTHORIZED BY AGILENT TECHNOLOGIES.	LAST CHECKED	DATE	SCHEMATIC. PWA Front End Assembly 1.5 GHz 50 ohm RF	AGILENT TECHNOLOGIES 5320
	ENGINEER	SHEET 1 OF 1	TITLE	
	DRAWN BY	SIZE C	PATHNAME: HP_E4401/20203/A4006_1/source/inputswitch.sheet1	PART NUMBER: E4401-60203
		ASSY. REV: AA4006	BRD. REV: A4006 PAGE 4 OF 19	DWG. NO.: C-E4401-60203-1

REVISIONS
SEE PAGE 1 FOR REVISION HISTORY

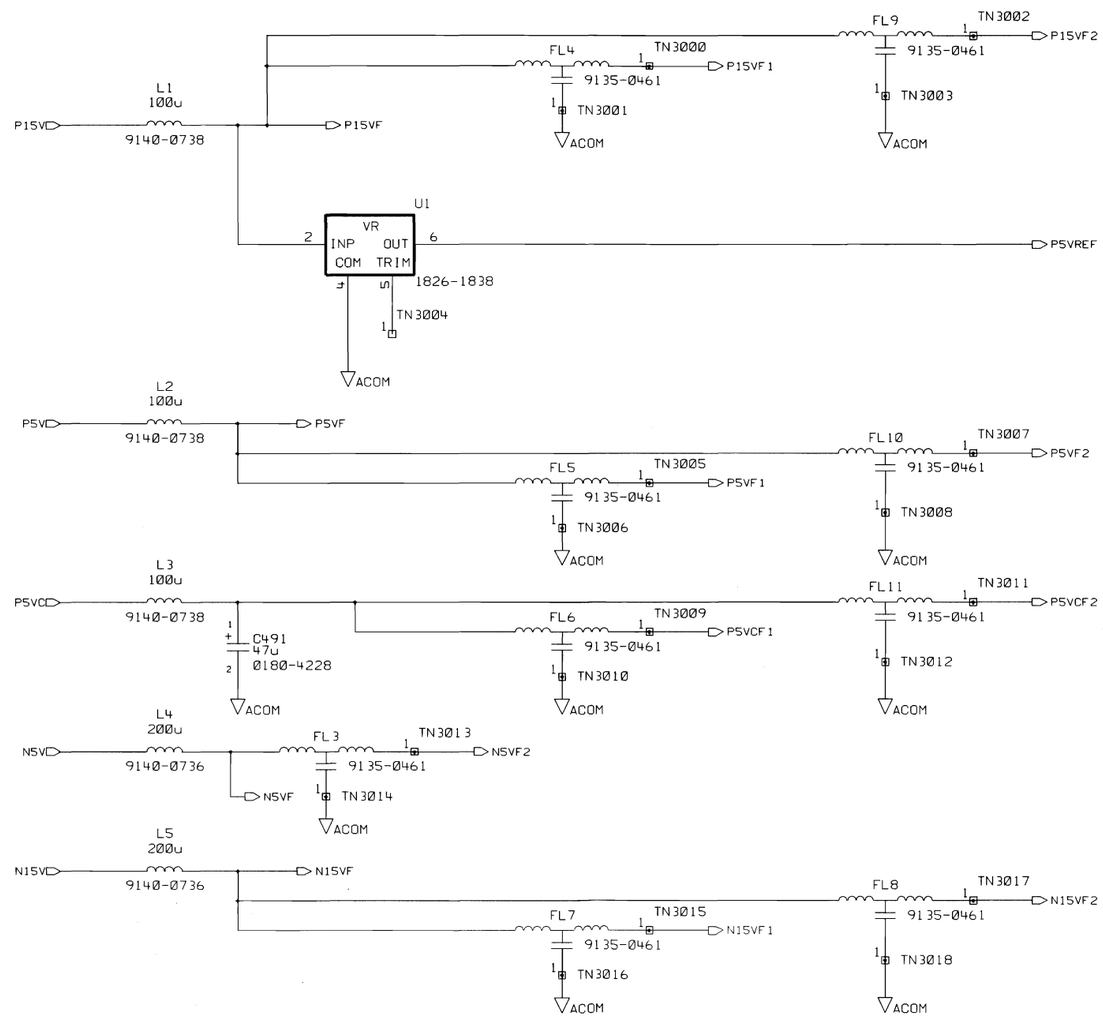

AGILENT TECHNOLOGIES RESTRICTED

THIS DOCUMENT CONTAINS CONFIDENTIAL, PROPRIETARY INFORMATION THAT IS AGILENT TECHNOGIES PROPERTY. DO NOT DISCLOSE TO OR DUPLICATE FOR OTHERS EXCEPT AS AUTHORIZED BY AGILENT TECHNOLOGIES.

LAST CHECKED	DATE	SCHEMATIC. PWA Front End Assembly 1.5 GHz 50 ohm RF	AGILENT TECHNOLOGIES 5320
ENGINEER	SHEET 1 OF 1	TITLE	
DRAWN BY	SIZE B	$HP_E4401/20203/A4006_1/pwrsupply sheet1 PATHNAME	E4401-60203 PART NUMBER
	AA4006 ASSY. REV	A4006 BRD. REV	PAGE 5 OF 19	B-E4401-60203-1 DWG. NO.

REVISIONS
SEE PAGE 1 FOR REVISION HISTORY

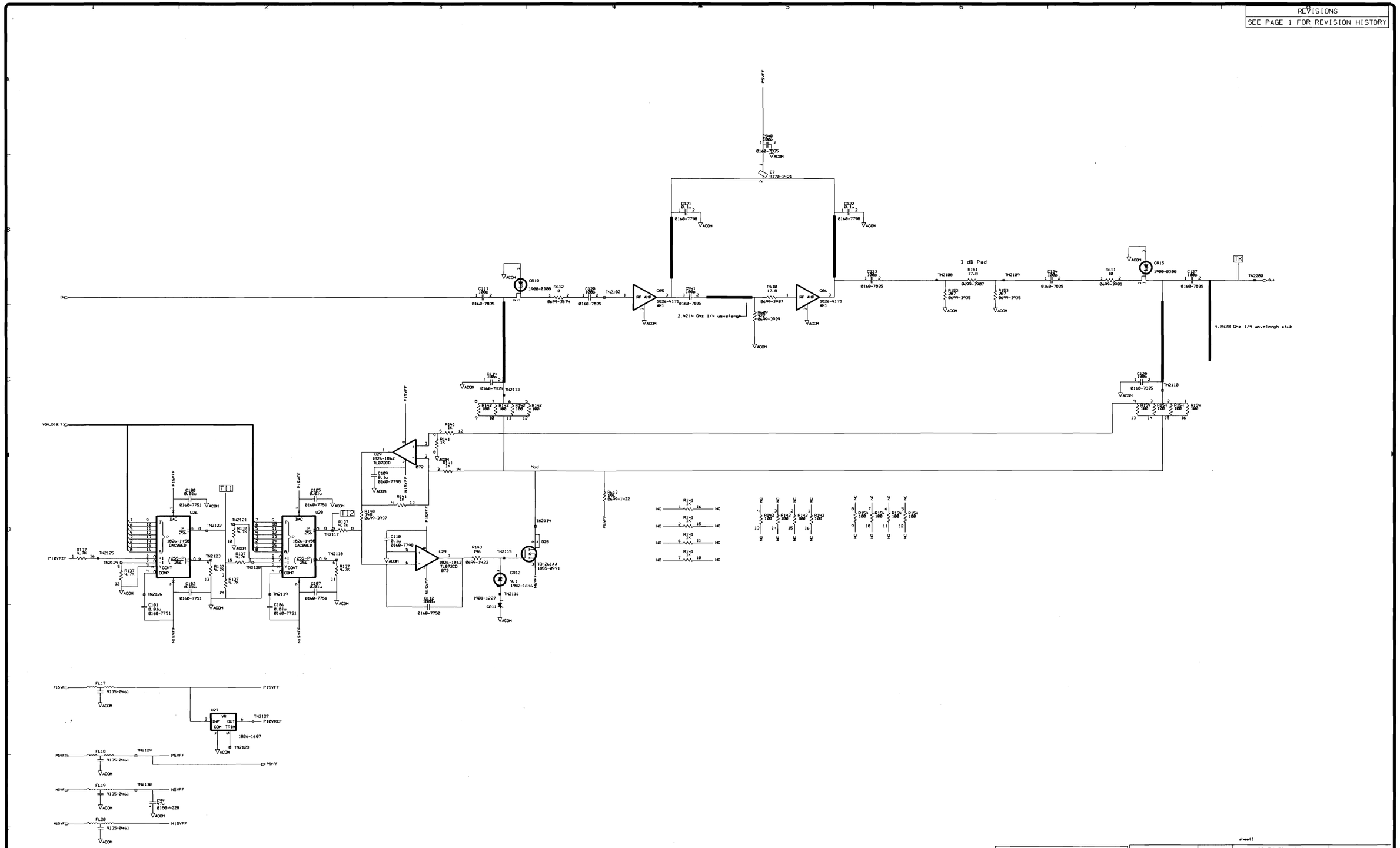

AGILENT TECHNOLOGIES
RESTRICTED

THIS DOCUMENT CONTAINS CONFIDENTIAL, PROPRIETARY INFORMATION THAT IS AGILENT TECHNOLOGIES PROPERTY. DO NOT DISCLOSE TO OR DUPLICATE FOR OTHERS EXCEPT AS AUTHORIZED BY AGILENT TECHNOLOGIES.

LAST CHECKED	DATE	SCHEMATIC, PWA Front End Assembly 1.5 GHz 50 ohm RF	AGILENT TECHNOLOGIES 5120
ENGINEER	SHEET 1 OF 1	TITLE	E4401-60203
DRAWN BY	SIZE D	HP_E4401/20203/A4006_1/firstif-vargain PATHNAME	PART NUMBER
	A4006 ASSY. REV	A4006 DRG. REV / PAGE 6 OF 19	D-E4401-60203-1 DWG. NO.

sheet1

REVISIONS
SEE PAGE 1 FOR REVISION HISTORY

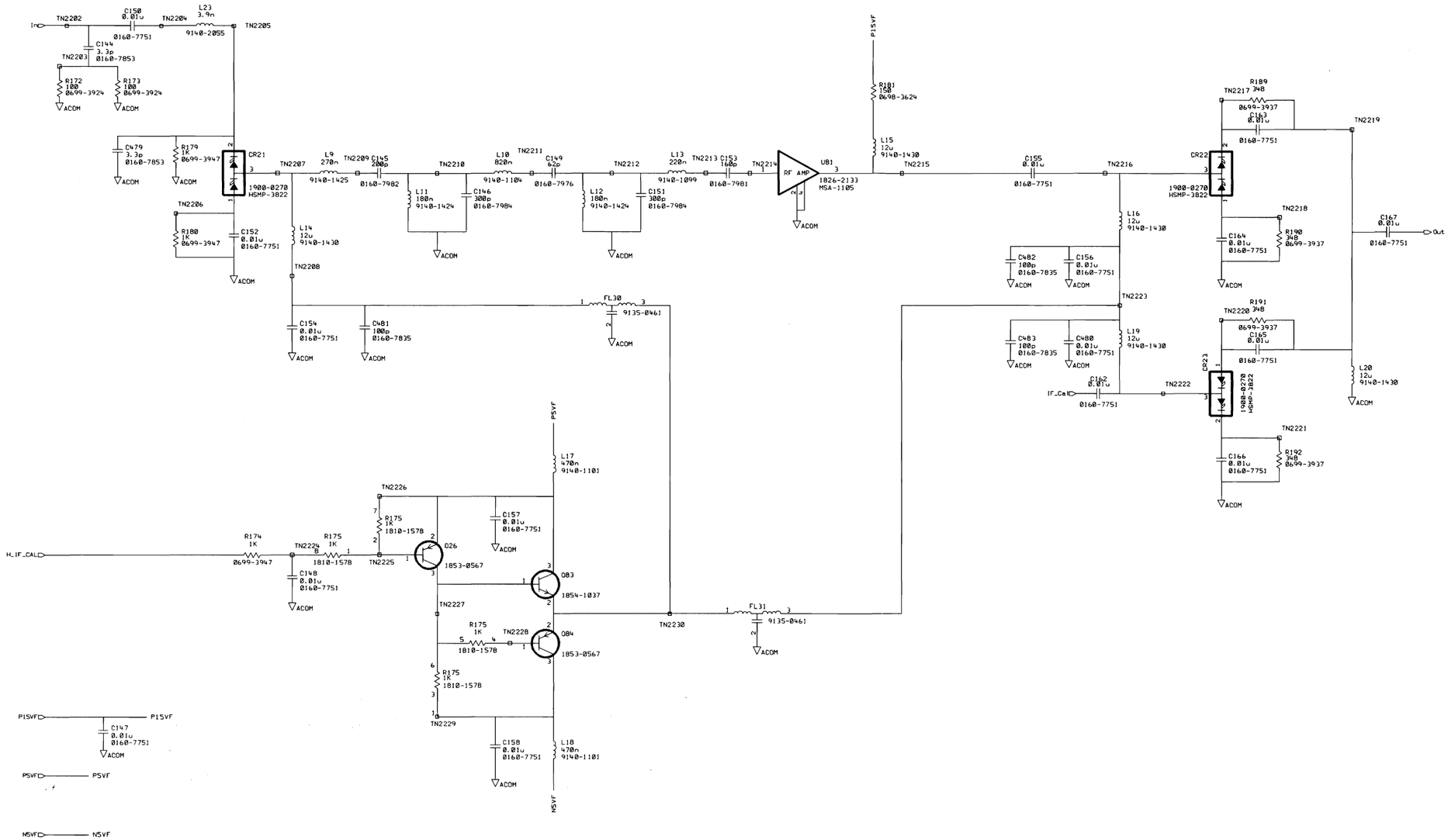

AGILENT TECHNOLOGIES RESTRICTED

THIS DOCUMENT CONTAINS CONFIDENTIAL, PROPRIETARY INFORMATION THAT IS AGILENT TECHNOGIES PROPERTY. DO NOT DISCLOSE TO OR DUPLICATE FOR OTHERS EXCEPT AS AUTHORIZED BY AGILENT TECHNOLOGIES.

LAST CHECKED	DATE	SCHEMATIC, PWA Front End Assembly 1.5 GHz 50 ohm RF	AGILENT TECHNOLOGIES 5320
ENGINEER	SHEET 1 OF 1	TITLE	
DRAWN BY	SIZE C	$HP_E4401/20203/A4006_1/lastiflna sheet0 PATHNAME	E4401-60203 PART NUMBER
	AA4006 ASSY. REV	A4006 BRD. REV / PAGE 7 OF 19	C-E4401-60203-1 DWG. NO.

REVISIONS
SEE PAGE 1 FOR REVISION HISTORY

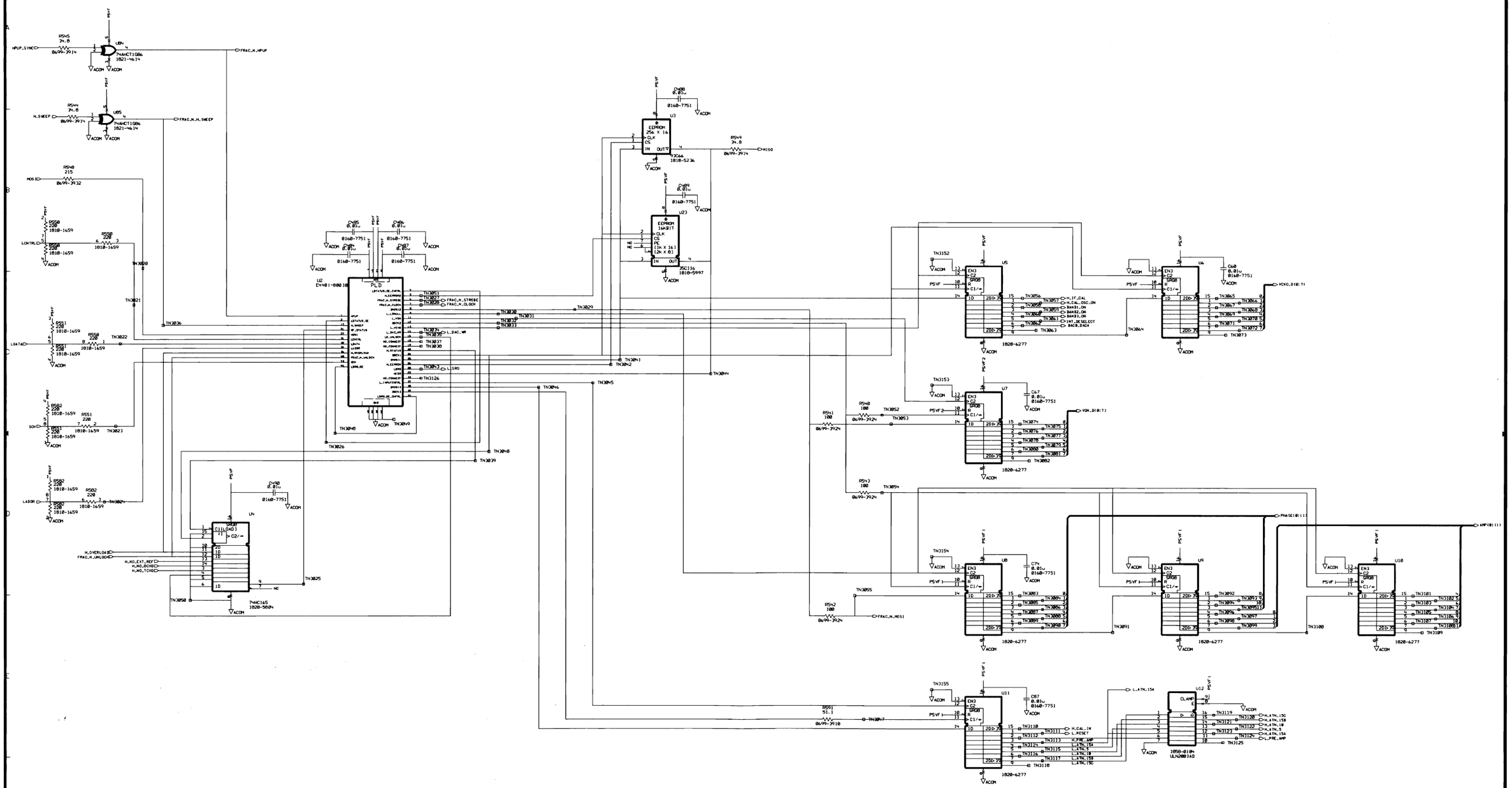

AGILENT TECHNOLOGIES
RESTRICTED
THIS DOCUMENT CONTAINS CONFIDENTIAL, PROPRIETARY INFORMATION THAT IS AGILENT TECHNOLOGIES PROPERTY. DO NOT DISCLOSE TO OR DUPLICATE FOR OTHERS EXCEPT AS AUTHORIZED BY AGILENT TECHNOLOGIES.

LAST CHECKED	DATE	SCHEMATIC, PWA Front End Assembly 1.5 GHz 50 ohm RF
ENGINEER	SHEET 1 OF 1	TITLE
DRAWN BY	SIZE D	BWP_EN481/2020J/A4006.1/digital sheet1 PATHNAME
	AA4006 ASSY. REV.	A4006 B 19 DES. REV. PAGE OF

AGILENT TECHNOLOGIES
S120

E4401-60203
PART NUMBER

D-E4401-60203-1
DWG. NO.

REVISIONS
SEE PAGE 1 FOR REVISION HISTORY

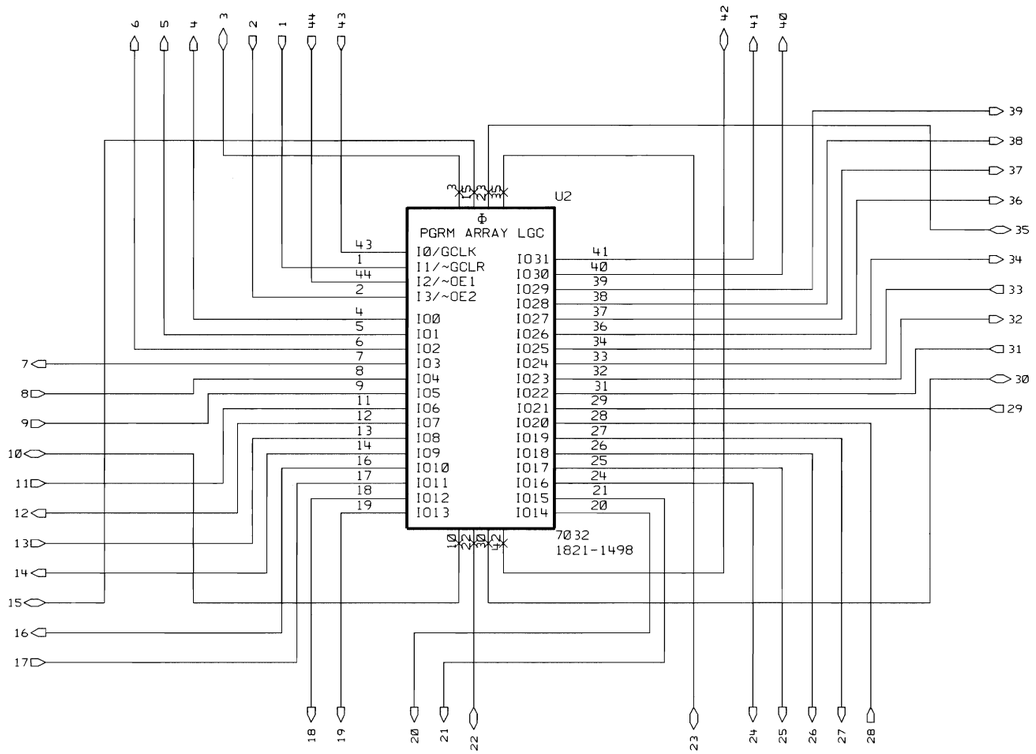

AGILENT TECHNOLOGIES RESTRICTED

THIS DOCUMENT CONTAINS CONFIDENTIAL. PROPRIETARY INFORMATION THAT IS AGILENT TECHNOGIES PROPERTY. DO NOT DISCLOSE TO OR DUPLICATE FOR OTHERS EXCEPT AS AUTHORIZED BY AGILENT TECHNOLOGIES.

LAST CHECKED	DATE	SCHEMATIC. PWA Front End Assembly 1.5 GHz 50 ohm RF	AGILENT TECHNOLOGIES 5320
ENGINEER	SHEET 1 OF 1	TITLE	
DRAWN BY	SIZE B	$HP_E4401/20203/A4006_1/rfpld sheet1 PATHNAME	E4401-60203 PART NUMBER
	AA4006 ASSY. REV	A4006 BRD. REV / PAGE 9 OF 19	B-E4401-60203-1 DWG. NO.

REVISIONS
SEE PAGE 1 FOR REVISION HISTORY

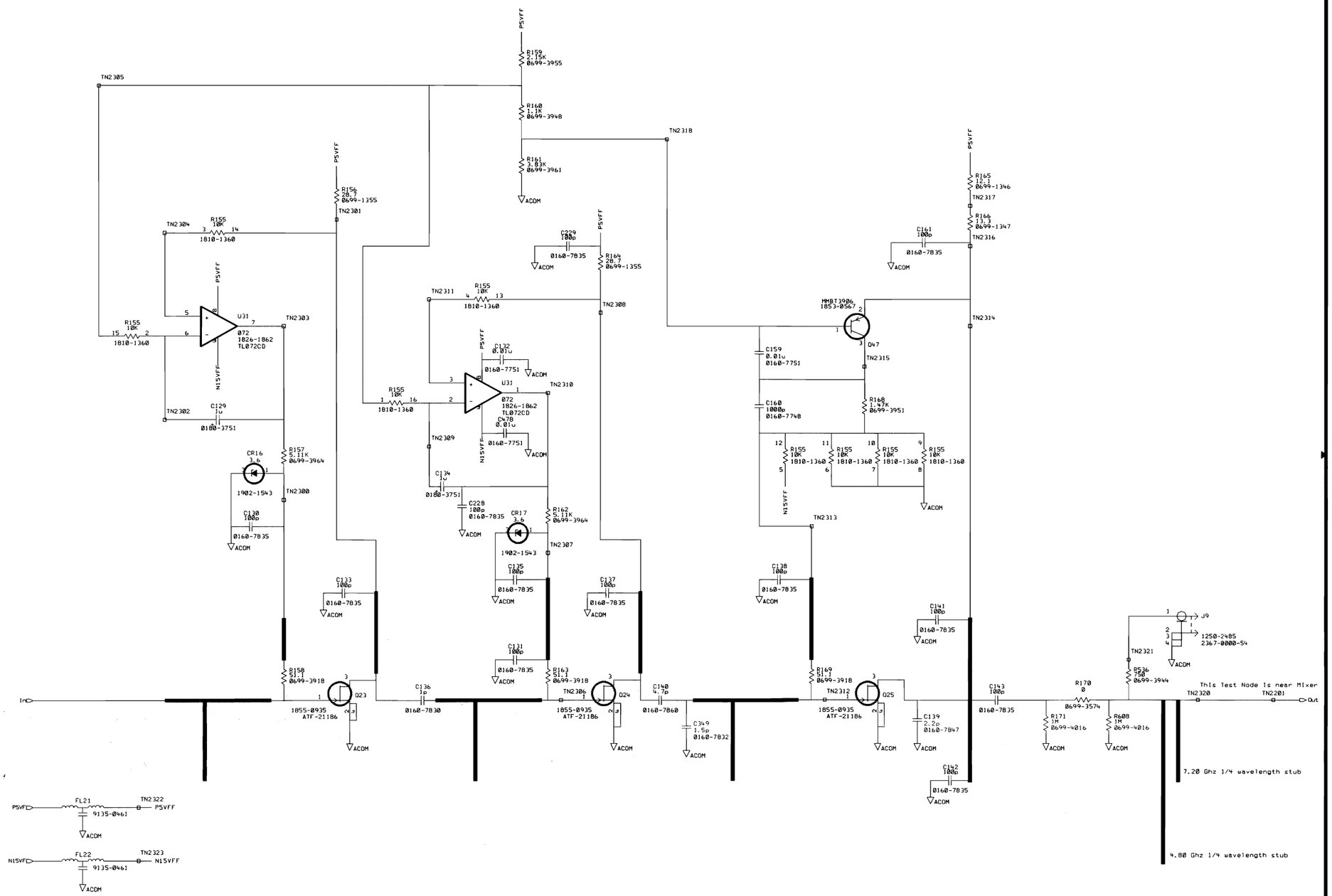

AGILENT TECHNOLOGIES RESTRICTED

THIS DOCUMENT CONTAINS CONFIDENTIAL, PROPRIETARY INFORMATION THAT IS AGILENT TECHNOGIES PROPERTY. DO NOT DISCLOSE TO OR DUPLICATE FOR OTHERS EXCEPT AS AUTHORIZED BY AGILENT TECHNOLOGIES.

LAST CHECKED	DATE	SCHEMATIC. PWA Front End Assembly 1.5 GHz 50 ohm RF	AGILENT TECHNOLOGIES 5320
ENGINEER	SHEET 1 OF 1	TITLE	
DRAWN BY	SIZE C	$HP_E4401/20203/A4006_1/secondloamp PATHNAME	E4401-60203 PART NUMBER
	AA4006 ASSY. REV	A4006 BRD. REV / PAGE 1.0 OF 1.9	C-E4401-60203-1 DWG. NO.

sheet1

REVISIONS
SEE PAGE 1 FOR REVISION HISTORY

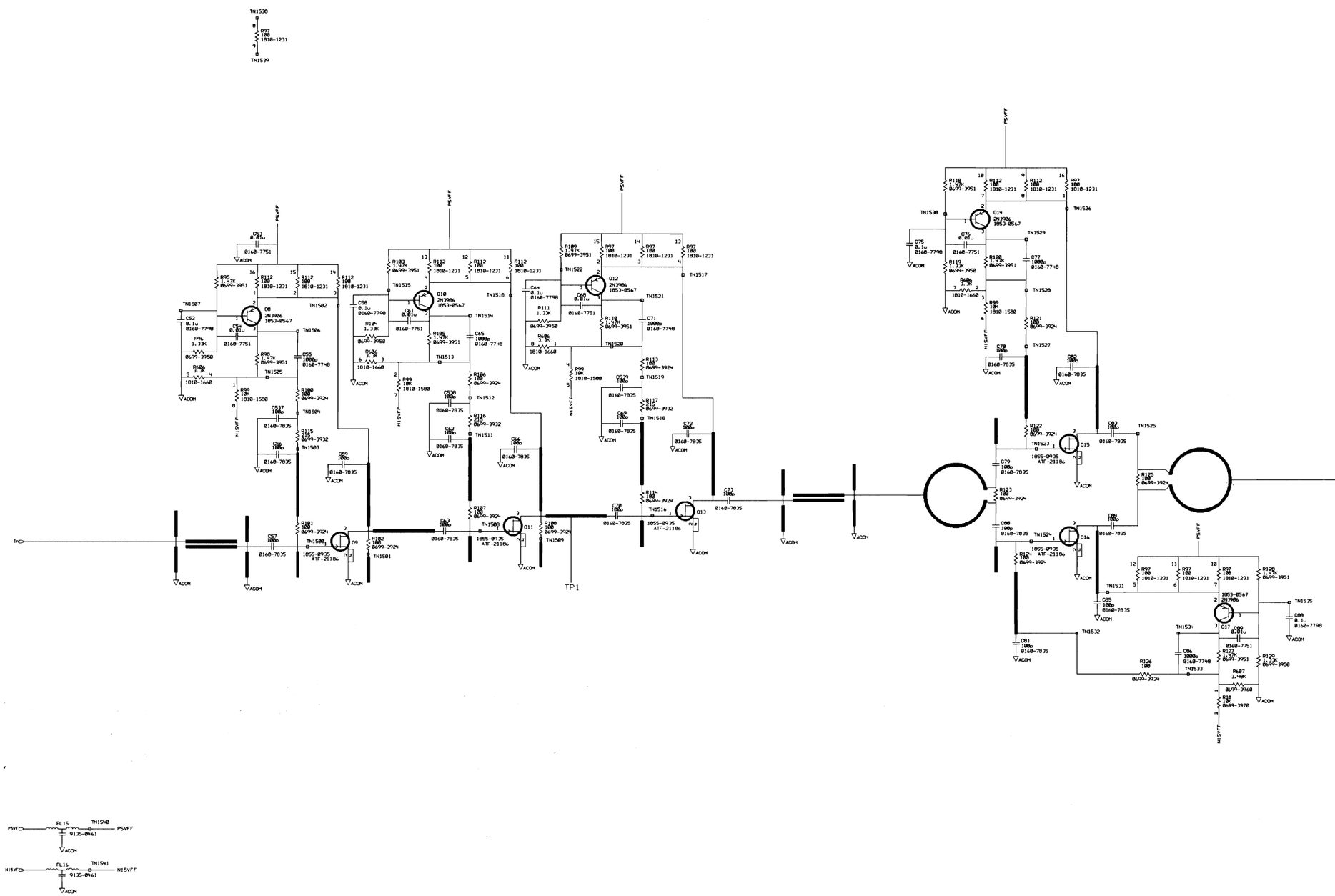

AGILENT TECHNOLOGIES RESTRICTED			
THIS DOCUMENT CONTAINS CONFIDENTIAL, PROPRIETARY INFORMATION THAT IS AGILENT TECHNOLOGIES PROPERTY. DO NOT DISCLOSE TO OR DUPLICATE FOR OTHERS EXCEPT AS AUTHORIZED BY AGILENT TECHNOLOGIES.	LAST CHECKED	DATE	SCHEMATIC, PWA Front End Assembly 1.5 GHz 50 ohm RF
	ENGINEER	SHEET 1 OF 1	TITLE
	DRAWN BY	SIZE D	PATHNAME: BP_ENG:01/2020J/A4006_1/firstloop sheet1
		AA4006 ASSY. REV	A4006 BRD. REV. / 11 PAGE OF 19

AGILENT TECHNOLOGIES 5320

E4401-60203 PART NUMBER

D-E4401-60203-1 DWG. NO.

(M) 10 MHz REFERENCE

REVISIONS
SEE PAGE 1 FOR REVISION HISTORY

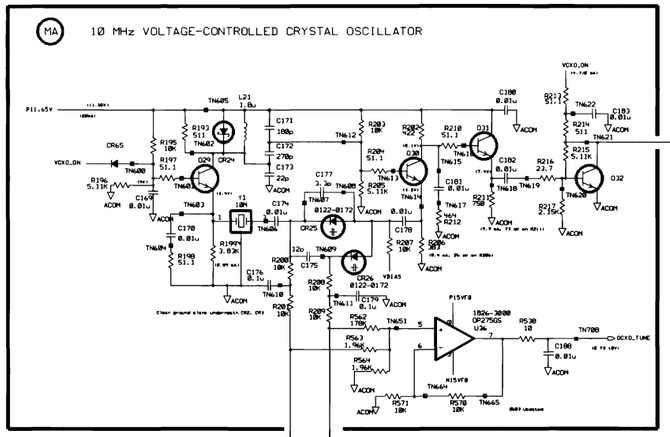

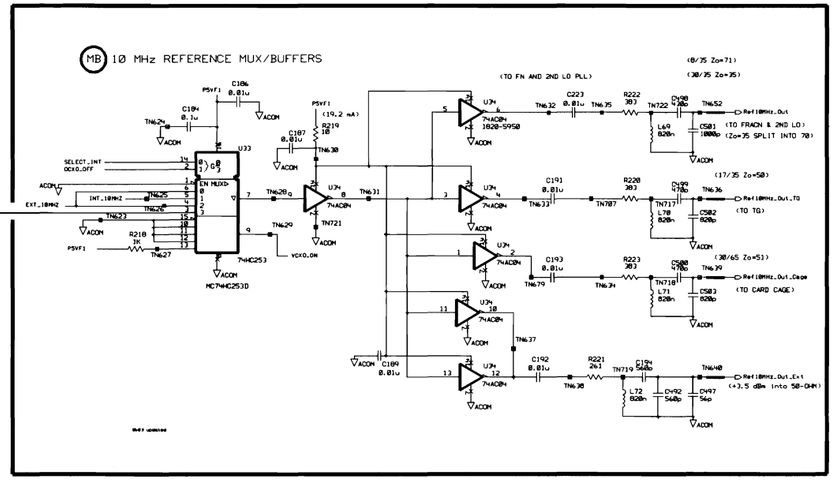

INT_DESELECT (OCXO_OFF)	NO_EXT_REF (SELECT_INT)	REF SELECTED
0	0	EXT REF
0	1	OCXO/TCXO
1	0	EXT REF
1	1	VCXO

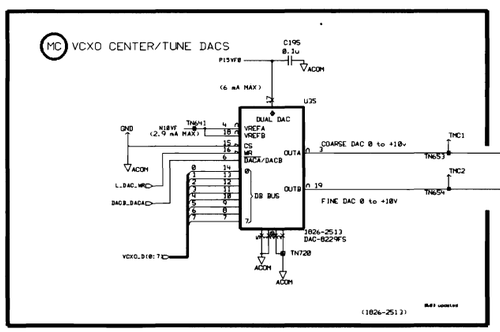

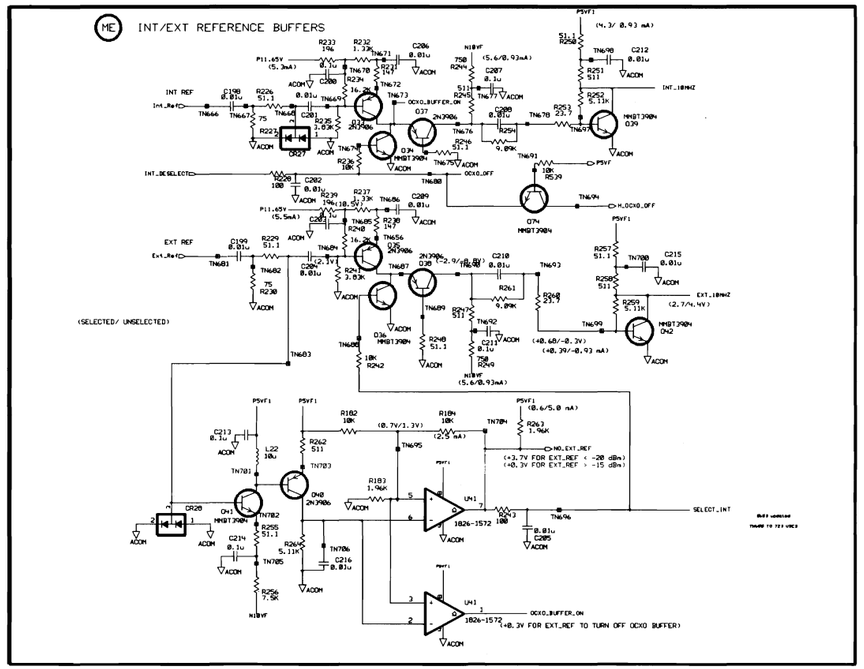

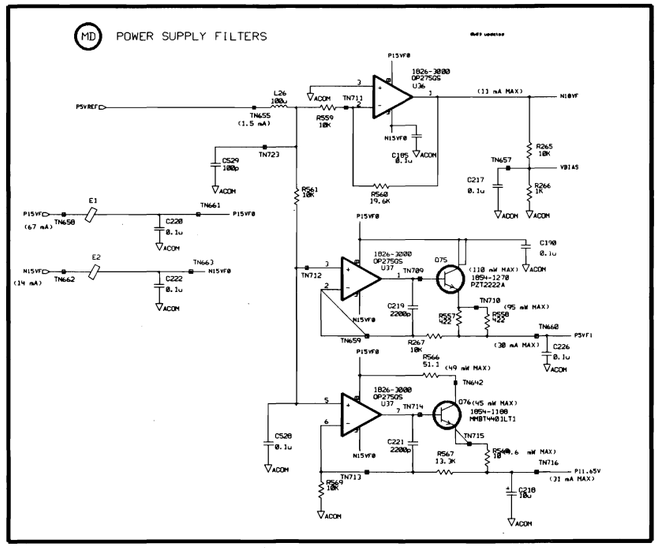

AGILENT TECHNOLOGIES
RESTRICTED
THIS DOCUMENT CONTAINS CONFIDENTIAL, PROPRIETARY INFORMATION THAT IS AGILENT TECHNOLOGIES PROPERTY. DO NOT DISCLOSE TO OR DUPLICATE FOR OTHERS EXCEPT AS AUTHORIZED BY AGILENT TECHNOLOGIES.

LAST CHECKED	DATE	SCHEMATIC, PWA Front End Assembly 1.5 GHz 50 ohm RF	AGILENT TECHNOLOGIES 5120
ENGINEER	SHEET 1 OF 1	TITLE	E4401-60203
DRAWN BY	SIZE D	BAP_E4401/20203/A4006.1/Reference_10MHz PATHNAME / Sheet1	PART NUMBER
	ASSY. REV AA4006	BRD. REV A4006	PAGE 12 OF 19	DWG. NO. D-E4401-60203-1

REVISIONS
SEE PAGE 1 FOR REVISION HISTORY

⓪ FIRST LO MULTIPLIER

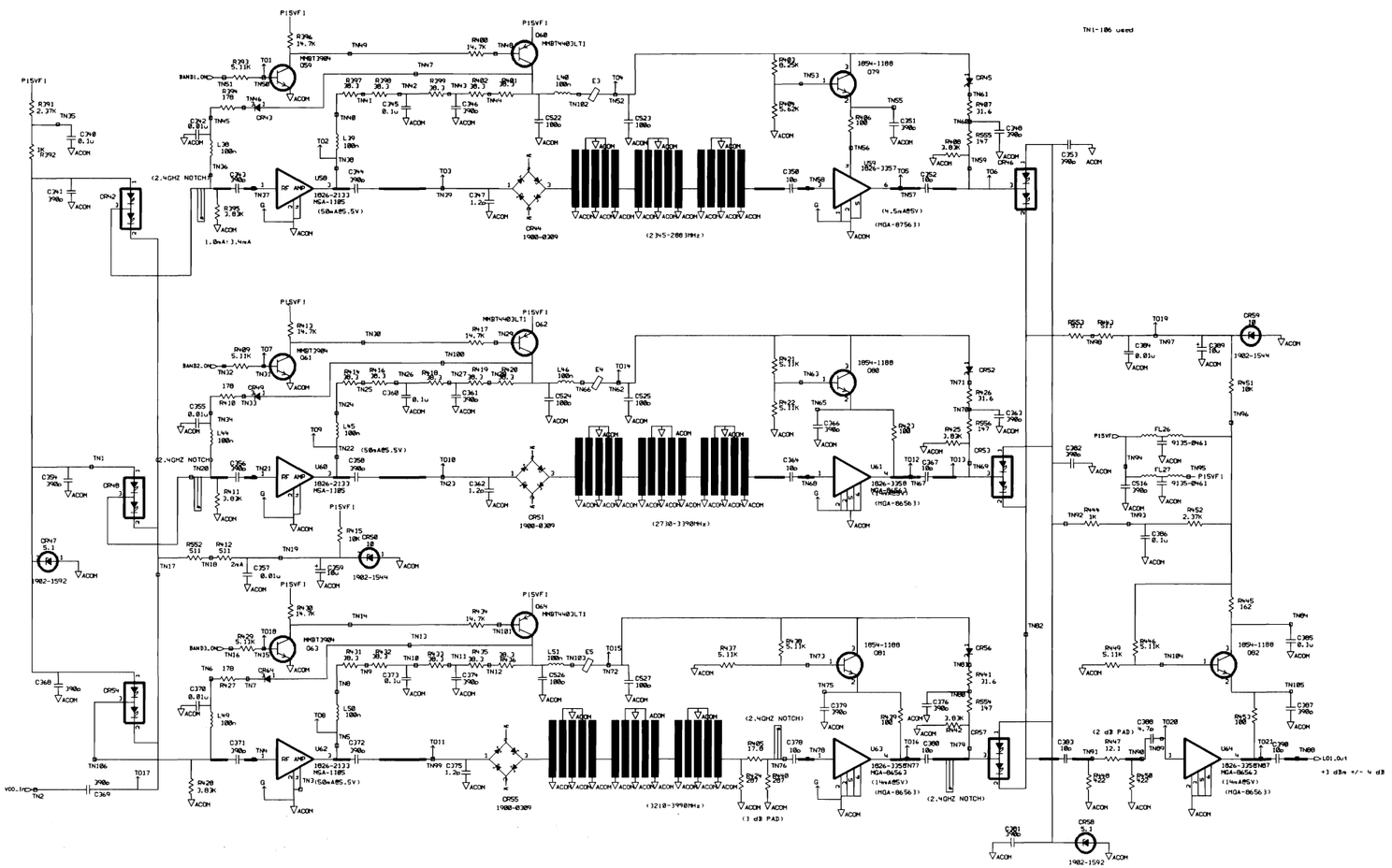

AGILENT TECHNOLOGIES RESTRICTED

THIS DOCUMENT CONTAINS CONFIDENTIAL, PROPRIETARY INFORMATION THAT IS AGILENT TECHNOGIES PROPERTY. DO NOT DISCLOSE TO OR DUPLICATE FOR OTHERS EXCEPT AS AUTHORIZED BY AGILENT TECHNOLOGIES.

LAST CHECKED	DATE	SCHEMATIC, PWA Front End Assembly 1.5 GHz 50 ohm RF	AGILENT TECHNOLOGIES 5120
ENGINEER	SHEET 1 OF 1	TITLE	E4401-60203
DRAWN BY	SIZE D	PATHNAME	PART NUMBER
	ASSY. REV. A4006	MTR. REV. A4006 PAGE 13 OF 19	DWG. NO. D-E4401-60203-1

REVISIONS
SEE PAGE 1 FOR REVISION HISTORY

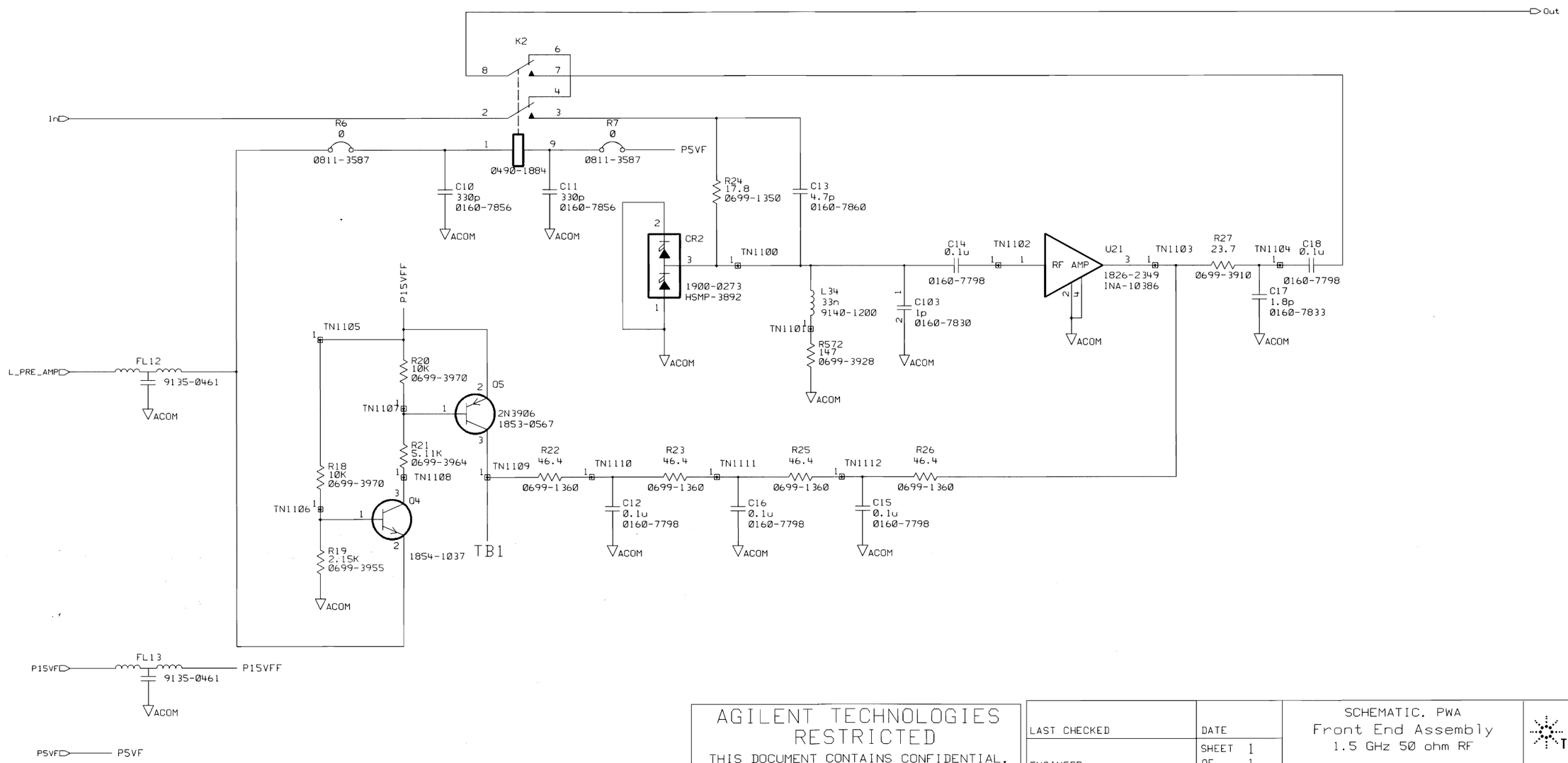

AGILENT TECHNOLOGIES RESTRICTED

THIS DOCUMENT CONTAINS CONFIDENTIAL. PROPRIETARY INFORMATION THAT IS AGILENT TECHNOGIES PROPERTY. DO NOT DISCLOSE TO OR DUPLICATE FOR OTHERS EXCEPT AS AUTHORIZED BY AGILENT TECHNOLOGIES.

LAST CHECKED	DATE	SCHEMATIC, PWA Front End Assembly 1.5 GHz 50 ohm RF	AGILENT TECHNOLOGIES 5320
ENGINEER	SHEET 1 OF 1	TITLE	
DRAWN BY	SIZE B	$HP_E4401/20203/A4006_1/source/preamp sheet1 PATHNAME	E4401-60203 PART NUMBER
	AA4006 ASSY. REV	A4006 BRD. REV / PAGE 14 OF 19	B-E4401-60203-1 DWG. NO.

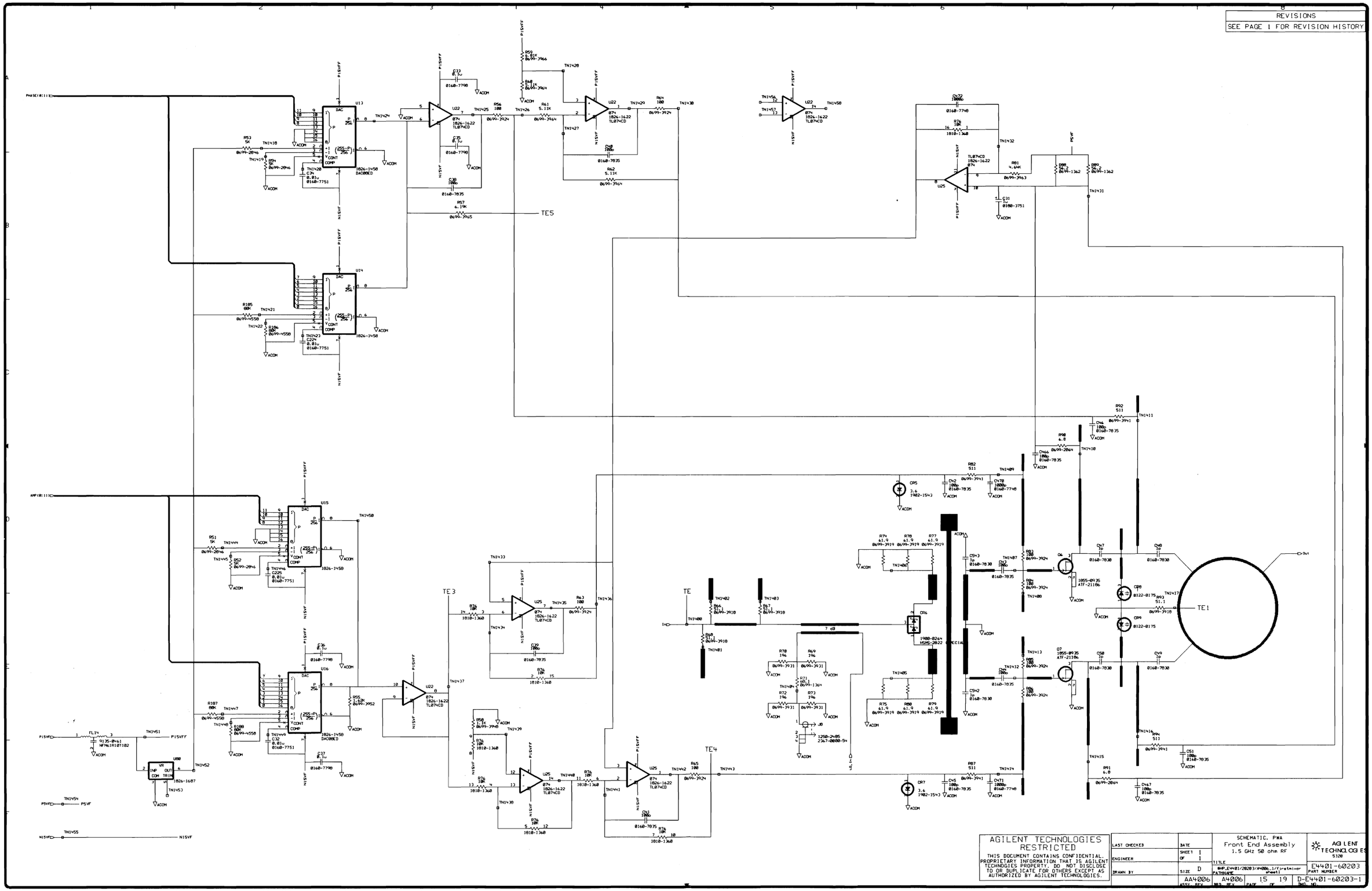
REVISIONS
SEE PAGE 1 FOR REVISION HISTORY
TE1
TE3
TE4
TE
TES
U13
U14
U15
U16
U22
U25
U26
U80
Q6
Q7
CR5
CR6
CR7
CR8
CR9
AGILENT TECHNOLOGIES RESTRICTED
THIS DOCUMENT CONTAINS CONFIDENTIAL, PROPRIETARY INFORMATION THAT IS AGILENT TECHNOLOGIES PROPERTY. DO NOT DISCLOSE TO OR DUPLICATE FOR OTHERS EXCEPT AS AUTHORIZED BY AGILENT TECHNOLOGIES.
LAST CHECKED
ENGINEER
DRAWN BY
DATE
SHEET 1 OF 1
SIZE D
SCHEMATIC, PWA
Front End Assembly
1.5 GHz 50 ohm RF
TITLE
AGILENT TECHNOLOGIES
5120
E4401-60203
PART NUMBER
AA4006
ASSY. REV
A4006
BRD. REV
15
PAGE
19
OF
D-E4401-60203-1
DWG. NO.

(N) FRACTIONAL N FIRST LO SYNTHESIZER

REVISIONS
SEE PAGE 1 FOR REVISION HISTORY

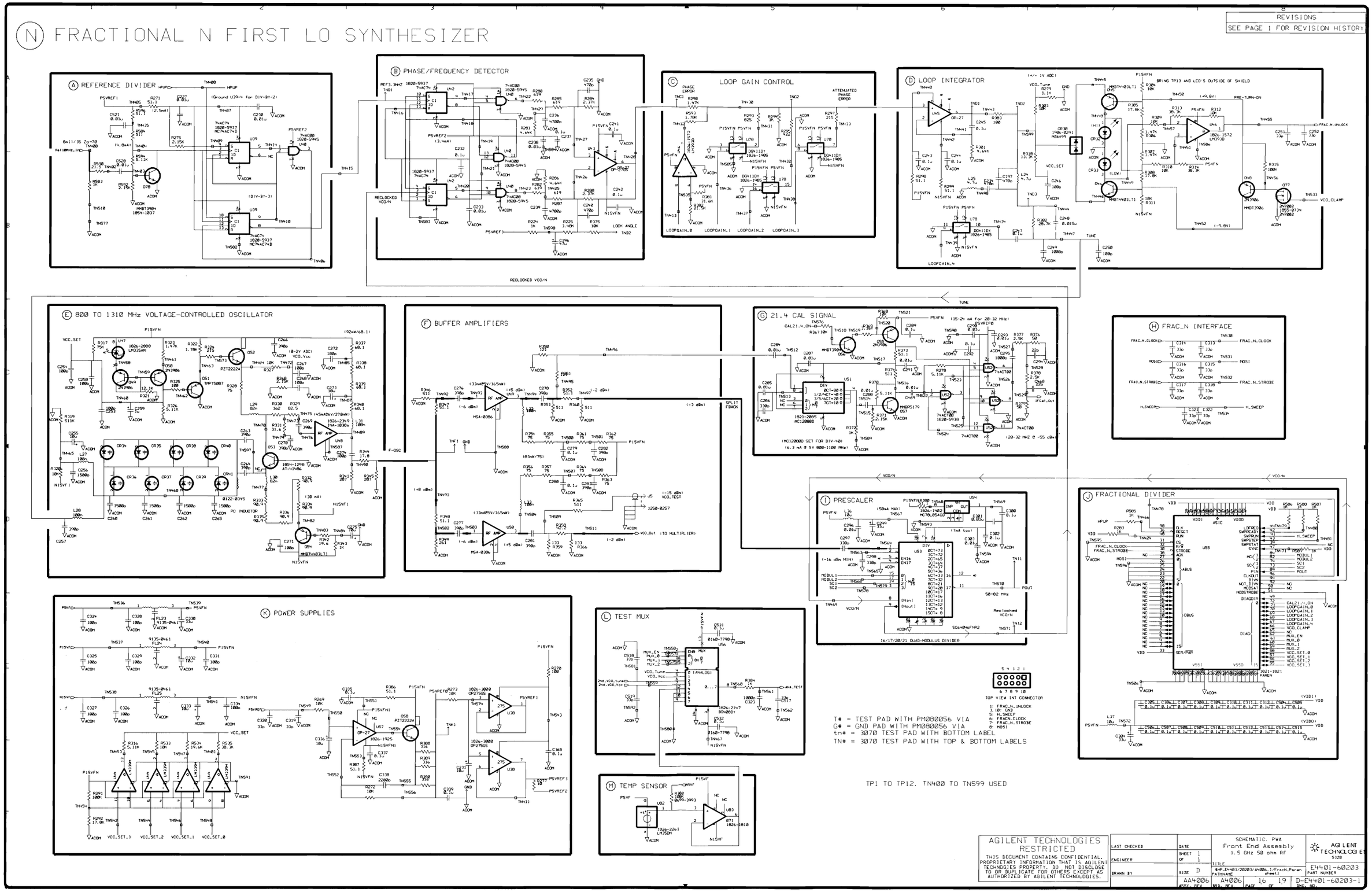

AGILENT TECHNOLOGIES RESTRICTED
THIS DOCUMENT CONTAINS CONFIDENTIAL, PROPRIETARY INFORMATION THAT IS AGILENT TECHNOGIES PROPERTY. DO NOT DISCLOSE TO OR DUPLICATE FOR OTHERS EXCEPT AS AUTHORIZED BY AGILENT TECHNOLOGIES.

LAST CHECKED	DATE	SCHEMATIC, PWA Front End Assembly 1.5 GHz 50 ohm RF	AGILENT TECHNOLOGIES 5320
ENGINEER	SHEET 1 OF 1	TITLE	E4401-60203
DRAWN BY	SIZE D	$HP_E4401/20203/A4006_1/FracN_Paren PATHNAME sheet1	PART NUMBER
	A4A4006 ASSY REV	A4006 MBR REV	16 OF 19 PAGE	D-E4401-60203-1 DWG NO

REVISIONS
SEE PAGE 1 FOR REVISION HISTORY

Q SECOND LO AND 50 MHZ CALIBRATOR

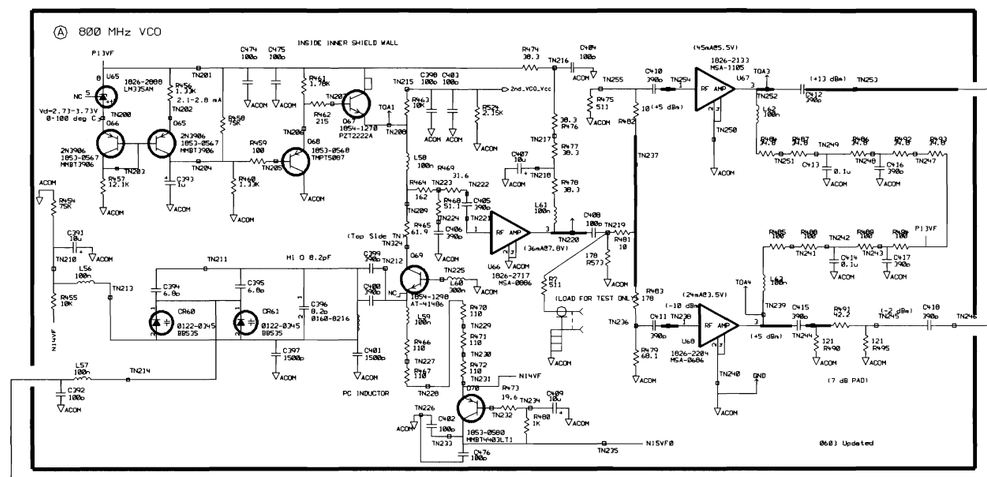

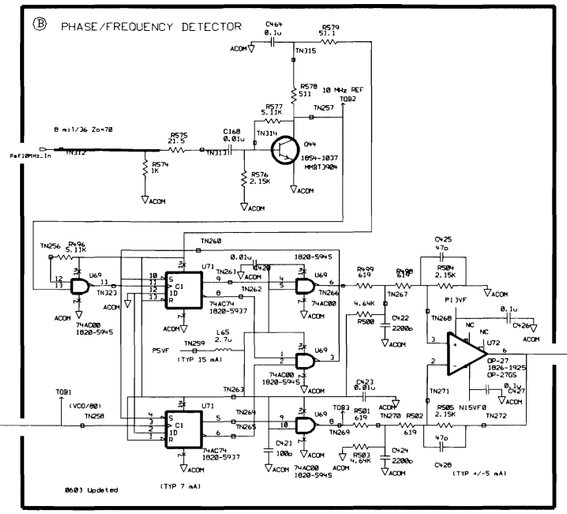

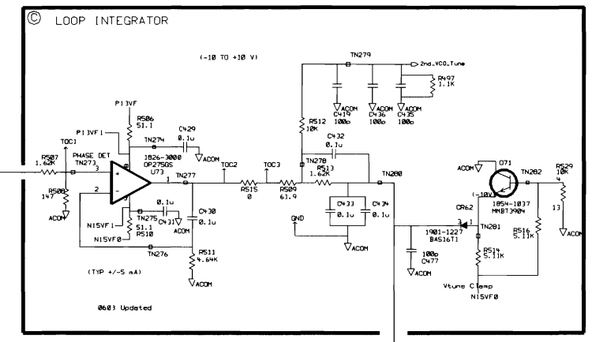

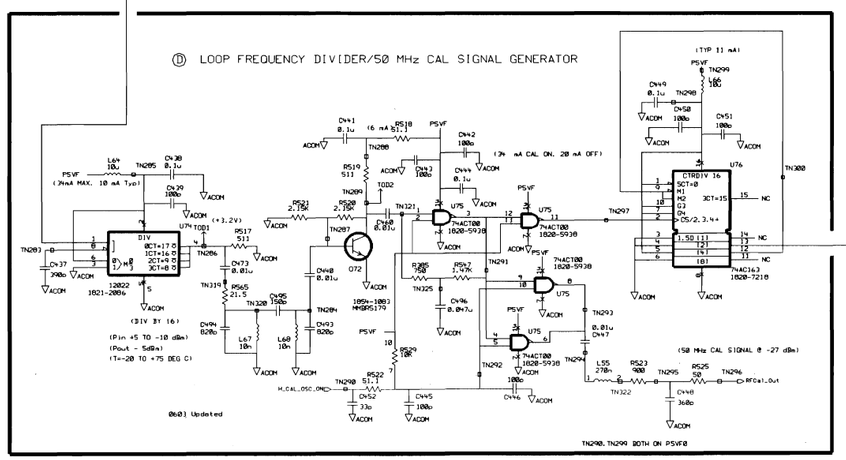

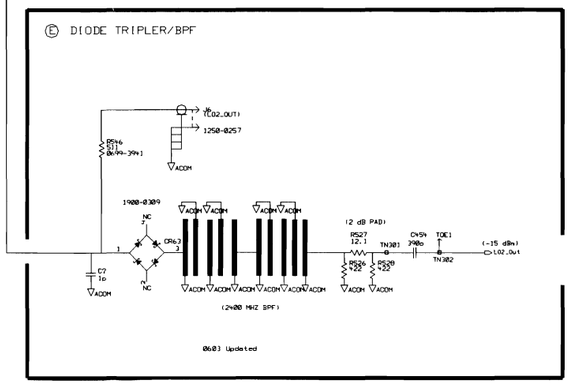

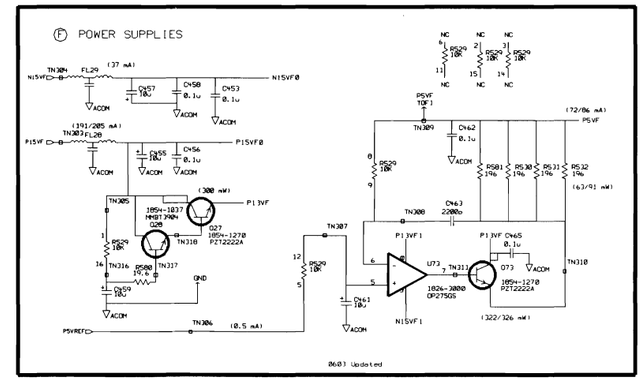

LAST TN325

TP# : PM062040 VIA
GND: PM080056 VIA

AGILENT TECHNOLOGIES
RESTRICTED
THIS DOCUMENT CONTAINS CONFIDENTIAL, PROPRIETARY INFORMATION THAT IS AGILENT TECHNOLOGIES PROPERTY. DO NOT DISCLOSE TO OR DUPLICATE FOR OTHERS EXCEPT AS AUTHORIZED BY AGILENT TECHNOLOGIES.

LAST CHECKED	DATE	SCHEMATIC, PWA Front End Assembly 1.5 GHz 50 ohm RF	AGILENT TECHNOLOGIES 5120
ENGINEER	SHEET 1 OF 1	TITLE	E4401-60203 PART NUMBER
DRAWN BY	SIZE D	PATHNAME: $HP_EN481/20203/AN006_1/Second_LO sheet1	
	AA4006 ASSY. REV	A4006 WBS REV	17 PAGE 19 OF	D-E4401-60203-1 DWG. NO.

REVISIONS

SEE PAGE 1 FOR REVISION HISTORY

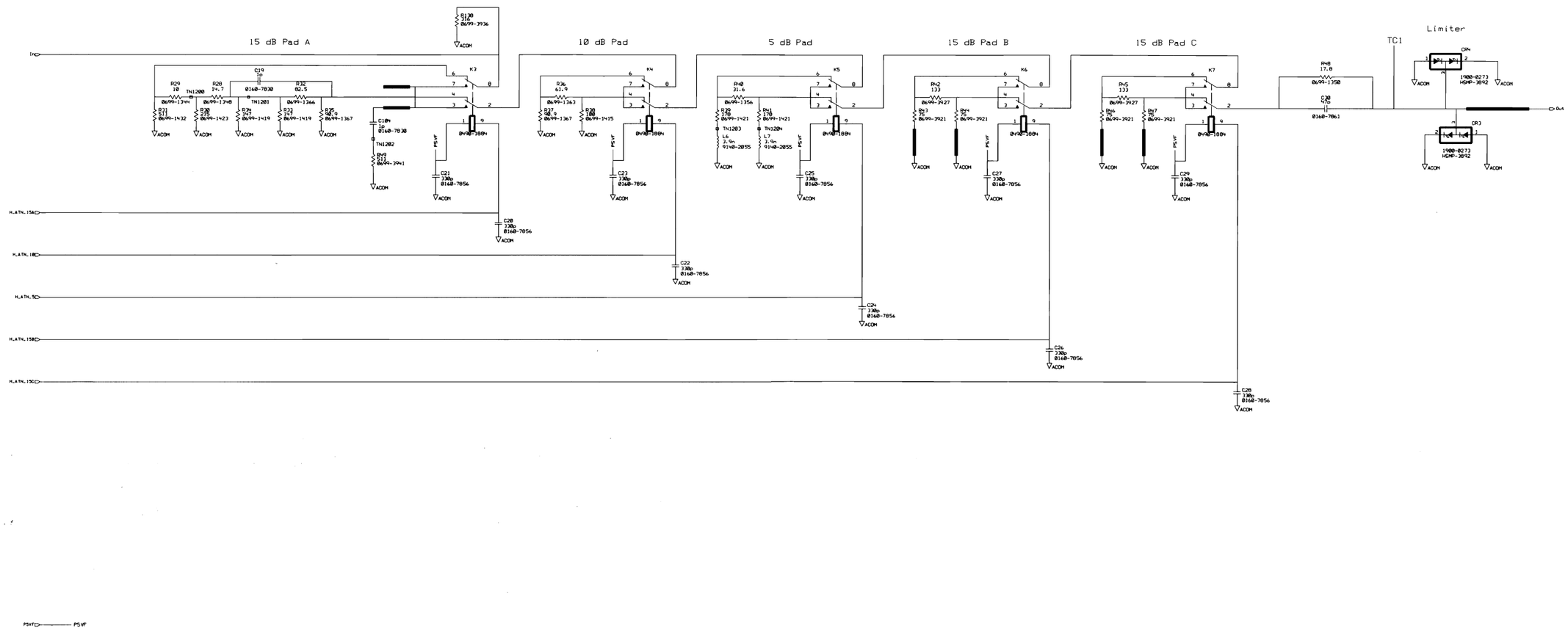

AGILENT TECHNOLOGIES
RESTRICTED
THIS DOCUMENT CONTAINS CONFIDENTIAL, PROPRIETARY INFORMATION THAT IS AGILENT TECHNOLOGIES PROPERTY. DO NOT DISCLOSE TO OR DUPLICATE FOR OTHERS EXCEPT AS AUTHORIZED BY AGILENT TECHNOLOGIES.

LAST CHECKED	DATE	SCHEMATIC, PWA Front End Assembly 1.5 GHz 50 ohm RF	AGILENT TECHNOLOGIES 5120
ENGINEER	SHEET 1 OF 1	TITLE	
DRAWN BY	SIZE D	PATHNAME ##P_E4401/20203/A4006_1/source/ (nodata=50 sheet)	E4401-60203 PART NUMBER
	AA4006 ASSY. REV	A4006 BOM REV	18 PAGE 19 OF D-E4401-60203-1 DWG. NO.

REVISIONS
SEE PAGE 1 FOR REVISION HISTORY

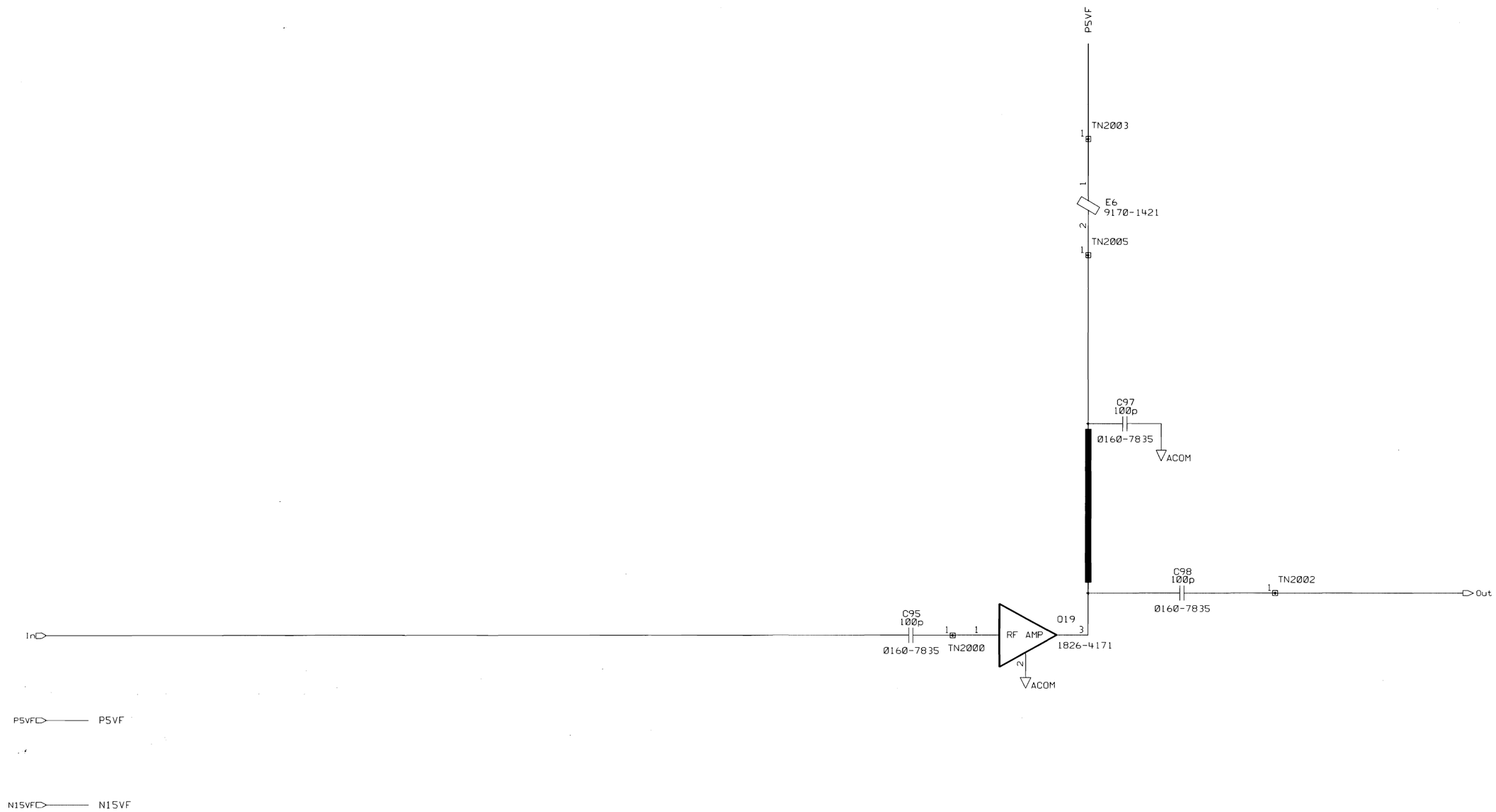

AGILENT TECHNOLOGIES RESTRICTED

THIS DOCUMENT CONTAINS CONFIDENTIAL. PROPRIETARY INFORMATION THAT IS AGILENT TECHNOGIES PROPERTY. DO NOT DISCLOSE TO OR DUPLICATE FOR OTHERS EXCEPT AS AUTHORIZED BY AGILENT TECHNOLOGIES.

LAST CHECKED	DATE	SCHEMATIC. PWA Front End Assembly 1.5 GHz 50 ohm RF	AGILENT TECHNOLOGIES 5320
ENGINEER	SHEET 1 OF 1	TITLE	
DRAWN BY	SIZE B	$HP_E4401/20203/A4006_1/firstiflna PATHNAME sheet1	E4401-60203 PART NUMBER
	AA4006 ASSY. REV	A4006 BRD. REV PAGE 19 OF 19	B-E4401-60203-1 DWG. NO.

Component-Level Information Packet for E4401-60100

1.5 GHz RF (75 Ohm)

Agilent Technologies

Agilent Part Number: E4401-90127
Printed in Malaysia April 2001

Notice

The information contained in this document is subject to change without notice. Agilent Technologies makes no warranty of any kind with regard to this material, including but not limited to, the implied warranties of merchantability and fitness for a particular purpose. Agilent Technologies shall not be liable for errors contained herein or for incidental or consequential damages in connection with the furnishing, performance, or use of this material.

© Copyright Agilent Technologies Inc. 2000, 2001
All Rights Reserved. Reproduction, adaptation, or translation without prior written permission is prohibited, except as allowed under the copyright laws.

Agilent Part Number E4401-60100
1.5 GHz RF (75 Ohm)

Reference Designator	Agilent Part Number	Qty	Description	Mgr Code	Mfr Part Number
C1	0160-7798	1	CAP-FXD 0.1uF +-10% 50 V CER X7R	06352	C2012X7R1H104K
C2	0160-7798	1	CAP-FXD 0.1uF +-10% 50 V CER X7R	06352	C2012X7R1H104K
C3	0160-7862	1	CAP-FXD 470pF +-10% 50 V CER X7R	02010	06035C471KAT
C4	0160-8236	1	CAP-FXD 0.022uF +-10% 100 V CER X7R	03553	ATC0805X7R223K L3A
C5	0160-7862	1	CAP-FXD 470pF +-10% 50 V CER X7R	02010	06035C471KAT
C6	0160-7798	1	CAP-FXD 0.1uF +-10% 50 V CER X7R	06352	C2012X7R1H104K
C7	0160-7862	1	CAP-FXD 470pF +-10% 50 V CER X7R	02010	06035C471KAT
C8	0160-7856	1	CAP-FXD 330pF +-10% 50 V CER X7R	02010	06035C331KAT
C9	0160-7856	1	CAP-FXD 330pF +-10% 50 V CER X7R	02010	06035C331KAT
C10	0160-7856	1	CAP-FXD 330pF +-10% 50 V CER X7R	02010	06035C331KAT
C11	0160-7856	1	CAP-FXD 330pF +-10% 50 V CER X7R	02010	06035C331KAT
C12	0160-7798	1	CAP-FXD 0.1uF +-10% 50 V CER X7R	06352	C2012X7R1H104K
C13	0160-7861	1	CAP-FXD 47pF +-5% 50 V CER C0G	02010	06035A470JAT
C14	0160-7798	1	CAP-FXD 0.1uF +-10% 50 V CER X7R	06352	C2012X7R1H104K
C15	0160-7798	1	CAP-FXD 0.1uF +-10% 50 V CER X7R	06352	C2012X7R1H104K
C16	0160-7798	1	CAP-FXD 0.1uF +-10% 50 V CER X7R	06352	C2012X7R1H104K
C17	0160-7833	1	CAP-FXD 1.8pF +-13.89% 50 V CER C0G	02010	06035A1R8CAT
C18	0160-7798	1	CAP-FXD 0.1uF +-10% 50 V CER X7R	06352	C2012X7R1H104K
C19	0160-7830	1	CAP-FXD 1pF +-25% 50 V CER C0G	12340	C0603C109C5GAC
C20	0160-7856	1	CAP-FXD 330pF +-10% 50 V CER X7R	02010	06035C331KAT
C21	0160-7856	1	CAP-FXD 330pF +-10% 50 V CER X7R	02010	06035C331KAT
C22	0160-7856	1	CAP-FXD 330pF +-10% 50 V CER X7R	02010	06035C331KAT
C23	0160-7856	1	CAP-FXD 330pF +-10% 50 V CER X7R	02010	06035C331KAT
C24	0160-7856	1	CAP-FXD 330pF +-10% 50 V CER X7R	02010	06035C331KAT
C25	0160-7856	1	CAP-FXD 330pF +-10% 50 V CER X7R	02010	06035C331KAT
C26	0160-7856	1	CAP-FXD 330pF +-10% 50 V CER X7R	02010	06035C331KAT
C27	0160-7856	1	CAP-FXD 330pF +-10% 50 V CER X7R	02010	06035C331KAT
C28	0160-7856	1	CAP-FXD 330pF +-10% 50 V CER X7R	02010	06035C331KAT

**Indicates factory-selected value*

Agilent Part Number E4401-60100
1.5 GHz RF (75 Ohm)

Reference Designator	Agilent Part Number	Qty	Description	Mgr Code	Mfr Part Number
C29	0160-7856	1	CAP-FXD 330pF +-10% 50 V CER X7R	02010	06035C331KAT
C30	0160-7861	1	CAP-FXD 47pF +-5% 50 V CER C0G	02010	06035A470JAT
C31	0180-3751	1	CAP-FXD 1uF +-20% 35 V TA	02010	TAJB105M035
C32	0160-7751	1	CAP-FXD 0.01uF +-10% 50 V CER X7R	02010	06035C103KAT
C33	0160-7798	1	CAP-FXD 0.1uF +-10% 50 V CER X7R	06352	C2012X7R1H104K
C34	0160-7751	1	CAP-FXD 0.01uF +-10% 50 V CER X7R	02010	06035C103KAT
C35	0160-7798	1	CAP-FXD 0.1uF +-10% 50 V CER X7R	06352	C2012X7R1H104K
C36	0160-7798	1	CAP-FXD 0.1uF +-10% 50 V CER X7R	06352	C2012X7R1H104K
C37	0160-7798	1	CAP-FXD 0.1uF +-10% 50 V CER X7R	06352	C2012X7R1H104K
C38	0160-7835	1	CAP-FXD 100pF +-5% 50 V CER C0G	02010	06035A101JAT
C39	0160-7835	1	CAP-FXD 100pF +-5% 50 V CER C0G	02010	06035A101JAT
C40	0160-7835	1	CAP-FXD 100pF +-5% 50 V CER C0G	02010	06035A101JAT
C41	0160-7835	1	CAP-FXD 100pF +-5% 50 V CER C0G	02010	06035A101JAT
C42	0160-7835	1	CAP-FXD 100pF +-5% 50 V CER C0G	02010	06035A101JAT
C43	0160-7835	1	CAP-FXD 100pF +-5% 50 V CER C0G	02010	06035A101JAT
C44	0160-7835	1	CAP-FXD 100pF +-5% 50 V CER C0G	02010	06035A101JAT
C45	0160-7835	1	CAP-FXD 100pF +-5% 50 V CER C0G	02010	06035A101JAT
C46	0160-7835	1	CAP-FXD 100pF +-5% 50 V CER C0G	02010	06035A101JAT
C47	0160-7830	1	CAP-FXD 1pF +-25% 50 V CER C0G	12340	C0603C109C5GAC
C48	0160-7830	1	CAP-FXD 1pF +-25% 50 V CER C0G	12340	C0603C109C5GAC
C49	0160-7830	1	CAP-FXD 1pF +-25% 50 V CER C0G	12340	C0603C109C5GAC
C50	0160-7830	1	CAP-FXD 1pF +-25% 50 V CER C0G	12340	C0603C109C5GAC
C51	0160-7835	1	CAP-FXD 100pF +-5% 50 V CER C0G	02010	06035A101JAT
C52	0160-7798	1	CAP-FXD 0.1uF +-10% 50 V CER X7R	06352	C2012X7R1H104K
C53	0160-7751	1	CAP-FXD 0.01uF +-10% 50 V CER X7R	02010	06035C103KAT
C54	0160-7751	1	CAP-FXD 0.01uF +-10% 50 V CER X7R	02010	06035C103KAT
C55	0160-7748	1	CAP-FXD 1000pF +-10% 50 V CER X7R	02010	06035C102KAT
C56	0160-7835	1	CAP-FXD 100pF +-5% 50 V CER C0G	02010	06035A101JAT
C57	0160-7835	1	CAP-FXD 100pF +-5% 50 V CER C0G	02010	06035A101JAT
C58	0160-7798	1	CAP-FXD 0.1uF +-10% 50 V CER X7R	06352	C2012X7R1H104K

 **Indicates factory-selected value*

Agilent Part Number E4401-60100
1.5 GHz RF (75 Ohm)

Reference Designator	Agilent Part Number	Qty	Description	Mgr Code	Mfr Part Number
C59	0160-7835	1	CAP-FXD 100pF +-5% 50 V CER C0G	02010	06035A101JAT
C60	0160-7751	1	CAP-FXD 0.01uF +-10% 50 V CER X7R	02010	06035C103KAT
C61	0160-7751	1	CAP-FXD 0.01uF +-10% 50 V CER X7R	02010	06035C103KAT
C62	0160-7835	1	CAP-FXD 100pF +-5% 50 V CER C0G	02010	06035A101JAT
C63	0160-7835	1	CAP-FXD 100pF +-5% 50 V CER C0G	02010	06035A101JAT
C64	0160-7798	1	CAP-FXD 0.1uF +-10% 50 V CER X7R	06352	C2012X7R1H104K
C65	0160-7748	1	CAP-FXD 1000pF +-10% 50 V CER X7R	02010	06035C102KAT
C66	0160-7835	1	CAP-FXD 100pF +-5% 50 V CER C0G	02010	06035A101JAT
C67	0160-7751	1	CAP-FXD 0.01uF +-10% 50 V CER X7R	02010	06035C103KAT
C68	0160-7751	1	CAP-FXD 0.01uF +-10% 50 V CER X7R	02010	06035C103KAT
C69	0160-7835	1	CAP-FXD 100pF +-5% 50 V CER C0G	02010	06035A101JAT
C70	0160-7835	1	CAP-FXD 100pF +-5% 50 V CER C0G	02010	06035A101JAT
C71	0160-7748	1	CAP-FXD 1000pF +-10% 50 V CER X7R	02010	06035C102KAT
C72	0160-7835	1	CAP-FXD 100pF +-5% 50 V CER C0G	02010	06035A101JAT
C73	0160-7835	1	CAP-FXD 100pF +-5% 50 V CER C0G	02010	06035A101JAT
C74	0160-7751	1	CAP-FXD 0.01uF +-10% 50 V CER X7R	02010	06035C103KAT
C75	0160-7798	1	CAP-FXD 0.1uF +-10% 50 V CER X7R	06352	C2012X7R1H104K
C76	0160-7751	1	CAP-FXD 0.01uF +-10% 50 V CER X7R	02010	06035C103KAT
C77	0160-7748	1	CAP-FXD 1000pF +-10% 50 V CER X7R	02010	06035C102KAT
C78	0160-7835	1	CAP-FXD 100pF +-5% 50 V CER C0G	02010	06035A101JAT
C79	0160-7835	1	CAP-FXD 100pF +-5% 50 V CER C0G	02010	06035A101JAT
C80	0160-7835	1	CAP-FXD 100pF +-5% 50 V CER C0G	02010	06035A101JAT
C81	0160-7835	1	CAP-FXD 100pF +-5% 50 V CER C0G	02010	06035A101JAT
C82	0160-7835	1	CAP-FXD 100pF +-5% 50 V CER C0G	02010	06035A101JAT
C83	0160-7835	1	CAP-FXD 100pF +-5% 50 V CER C0G	02010	06035A101JAT
C84	0160-7835	1	CAP-FXD 100pF +-5% 50 V CER C0G	02010	06035A101JAT
C85	0160-7835	1	CAP-FXD 100pF +-5% 50 V CER C0G	02010	06035A101JAT
C86	0160-7748	1	CAP-FXD 1000pF +-10% 50 V CER X7R	02010	06035C102KAT
C87	0160-7751	1	CAP-FXD 0.01uF +-10% 50 V CER X7R	02010	06035C103KAT
C88	0160-7798	1	CAP-FXD 0.1uF +-10% 50 V CER X7R	06352	C2012X7R1H104K

**Indicates factory-selected value*

Agilent Part Number E4401-60100
1.5 GHz RF (75 Ohm)

Reference Designator	Agilent Part Number	Qty	Description	Mgr Code	Mfr Part Number
C89	0160-7751	1	CAP-FXD 0.01uF +-10% 50 V CER X7R	02010	06035C103KAT
C90	0160-7832	1	CAP-FXD 1.5pF +-16.67% 50 V CER C0G	02010	06035A1R5CAT
C91	0160-7832	1	CAP-FXD 1.5pF +-16.67% 50 V CER C0G	02010	06035A1R5CAT
C92	0160-7798	1	CAP-FXD 0.1uF +-10% 50 V CER X7R	06352	C2012X7R1H104K
C93	0160-7751	1	CAP-FXD 0.01uF +-10% 50 V CER X7R	02010	06035C103KAT
C94	0160-7748	1	CAP-FXD 1000pF +-10% 50 V CER X7R	02010	06035C102KAT
C95	0160-7834	1	CAP-FXD 10pF +-5% 50 V CER C0G	02010	06035A100JAT
C96	0160-7835	1	CAP-FXD 100pF +-5% 50 V CER C0G	02010	06035A101JAT
C97	0160-7835	1	CAP-FXD 100pF +-5% 50 V CER C0G	02010	06035A101JAT
C98	0160-7835	1	CAP-FXD 100pF +-5% 50 V CER C0G	02010	06035A101JAT
C99	0180-4228	1	CAP-FXD 47uF +-20% 10 V TA	02010	TAJD476M010
C100	0160-7751	1	CAP-FXD 0.01uF +-10% 50 V CER X7R	02010	06035C103KAT
C101	0160-7751	1	CAP-FXD 0.01uF +-10% 50 V CER X7R	02010	06035C103KAT
C102	0160-7751	1	CAP-FXD 0.01uF +-10% 50 V CER X7R	02010	06035C103KAT
C104	0160-7830	1	CAP-FXD 1pF +-25% 50 V CER C0G	12340	C0603C109C5GAC
C105	0160-7751	1	CAP-FXD 0.01uF +-10% 50 V CER X7R	02010	06035C103KAT
C106	0160-7751	1	CAP-FXD 0.01uF +-10% 50 V CER X7R	02010	06035C103KAT
C107	0160-7751	1	CAP-FXD 0.01uF +-10% 50 V CER X7R	02010	06035C103KAT
C108	0160-7798	1	CAP-FXD 0.1uF +-10% 50 V CER X7R	06352	C2012X7R1H104K
C109	0160-7798	1	CAP-FXD 0.1uF +-10% 50 V CER X7R	06352	C2012X7R1H104K
C110	0160-7798	1	CAP-FXD 0.1uF +-10% 50 V CER X7R	06352	C2012X7R1H104K
C111	0160-7798	1	CAP-FXD 0.1uF +-10% 50 V CER X7R	06352	C2012X7R1H104K
C112	0160-7750	1	CAP-FXD 1800pF +-10% 50 V CER X7R	02010	06035C182KAT
C113	0160-7835	1	CAP-FXD 100pF +-5% 50 V CER C0G	02010	06035A101JAT
C114	0160-7835	1	CAP-FXD 100pF +-5% 50 V CER C0G	02010	06035A101JAT
C115	0160-7798	1	CAP-FXD 0.1uF +-10% 50 V CER X7R	06352	C2012X7R1H104K
C116	0160-7835	1	CAP-FXD 100pF +-5% 50 V CER C0G	02010	06035A101JAT
C117	0160-7835	1	CAP-FXD 100pF +-5% 50 V CER C0G	02010	06035A101JAT
C118	0160-7751	1	CAP-FXD 0.01uF +-10% 50 V CER X7R	02010	06035C103KAT
C119	0160-7748	1	CAP-FXD 1000pF +-10% 50 V CER X7R	02010	06035C102KAT

 **Indicates factory-selected value*

Agilent Part Number E4401-60100
1.5 GHz RF (75 Ohm)

Reference Designator	Agilent Part Number	Qty	Description	Mgr Code	Mfr Part Number
C120	0160-7834	1	CAP-FXD 10pF +-5% 50 V CER C0G	02010	06035A100JAT
C121	0160-7835	1	CAP-FXD 100pF +-5% 50 V CER C0G	02010	06035A101JAT
C122	0160-7835	1	CAP-FXD 100pF +-5% 50 V CER C0G	02010	06035A101JAT
C123	0160-7835	1	CAP-FXD 100pF +-5% 50 V CER C0G	02010	06035A101JAT
C124	0160-7835	1	CAP-FXD 100pF +-5% 50 V CER C0G	02010	06035A101JAT
C125	0160-7835	1	CAP-FXD 100pF +-5% 50 V CER C0G	02010	06035A101JAT
C126	0160-7835	1	CAP-FXD 100pF +-5% 50 V CER C0G	02010	06035A101JAT
C127	0160-7835	1	CAP-FXD 100pF +-5% 50 V CER C0G	02010	06035A101JAT
C128	0160-7835	1	CAP-FXD 100pF +-5% 50 V CER C0G	02010	06035A101JAT
C129	0180-3751	1	CAP-FXD 1uF +-20% 35 V TA	02010	TAJB105M035
C130	0160-7835	1	CAP-FXD 100pF +-5% 50 V CER C0G	02010	06035A101JAT
C131	0160-7835	1	CAP-FXD 100pF +-5% 50 V CER C0G	02010	06035A101JAT
C132	0160-7751	1	CAP-FXD 0.01uF +-10% 50 V CER X7R	02010	06035C103KAT
C133	0160-7835	1	CAP-FXD 100pF +-5% 50 V CER C0G	02010	06035A101JAT
C134	0180-3751	1	CAP-FXD 1uF +-20% 35 V TA	02010	TAJB105M035
C135	0160-7835	1	CAP-FXD 100pF +-5% 50 V CER C0G	02010	06035A101JAT
C136	0160-7830	1	CAP-FXD 1pF +-25% 50 V CER C0G	12340	C0603C109C5GAC
C137	0160-7835	1	CAP-FXD 100pF +-5% 50 V CER C0G	02010	06035A101JAT
C138	0160-7835	1	CAP-FXD 100pF +-5% 50 V CER C0G	02010	06035A101JAT
C139	0160-7847	1	CAP-FXD 2.2pF +-11.36% 50 V CER C0G	02010	06035A2R2CAT
C140	0160-7860	1	CAP-FXD 4.7pF +-5.31% 50 V CER C0G	02010	06035A4R7CAT
C141	0160-7835	1	CAP-FXD 100pF +-5% 50 V CER C0G	02010	06035A101JAT
C142	0160-7835	1	CAP-FXD 100pF +-5% 50 V CER C0G	02010	06035A101JAT
C143	0160-7835	1	CAP-FXD 100pF +-5% 50 V CER C0G	02010	06035A101JAT
C144	0160-7853	1	CAP-FXD 3.3pF +-7.6% 50 V CER C0G	02010	06035A3R3CAT
C145	0160-7982	1	CAP-FXD 200pF +-5% 50 V CER C0G	02010	06035A201JAT
C146	0160-7984	1	CAP-FXD 300pF +-5% 50 V CER C0G	02010	06035A301JATA
C147	0160-7751	1	CAP-FXD 0.01uF +-10% 50 V CER X7R	02010	06035C103KAT
C148	0160-7751	1	CAP-FXD 0.01uF +-10% 50 V CER X7R	02010	06035C103KAT
C149	0160-7976	1	CAP-FXD 62pF +-5% 50 V CER C0G	06352	C1608COG1H620J

**Indicates factory-selected value*

Agilent Part Number E4401-60100
1.5 GHz RF (75 Ohm)

Reference Designator	Agilent Part Number	Qty	Description	Mgr Code	Mfr Part Number
C150	0160-7751	1	CAP-FXD 0.01uF +-10% 50 V CER X7R	02010	06035C103KAT
C151	0160-7984	1	CAP-FXD 300pF +-5% 50 V CER C0G	02010	06035A301JATA
C152	0160-7751	1	CAP-FXD 0.01uF +-10% 50 V CER X7R	02010	06035C103KAT
C153	0160-7981	1	CAP-FXD 160pF +-5% 50 V CER C0G	06352	C1608COG1H161J
C154	0160-7751	1	CAP-FXD 0.01uF +-10% 50 V CER X7R	02010	06035C103KAT
C155	0160-7751	1	CAP-FXD 0.01uF +-10% 50 V CER X7R	02010	06035C103KAT
C156	0160-7751	1	CAP-FXD 0.01uF +-10% 50 V CER X7R	02010	06035C103KAT
C157	0160-7751	1	CAP-FXD 0.01uF +-10% 50 V CER X7R	02010	06035C103KAT
C158	0160-7751	1	CAP-FXD 0.01uF +-10% 50 V CER X7R	02010	06035C103KAT
C159	0160-7751	1	CAP-FXD 0.01uF +-10% 50 V CER X7R	02010	06035C103KAT
C160	0160-7748	1	CAP-FXD 1000pF +-10% 50 V CER X7R	02010	06035C102KAT
C161	0160-7835	1	CAP-FXD 100pF +-5% 50 V CER C0G	02010	06035A101JAT
C162	0160-7751	1	CAP-FXD 0.01uF +-10% 50 V CER X7R	02010	06035C103KAT
C163	0160-7751	1	CAP-FXD 0.01uF +-10% 50 V CER X7R	02010	06035C103KAT
C164	0160-7751	1	CAP-FXD 0.01uF +-10% 50 V CER X7R	02010	06035C103KAT
C165	0160-7751	1	CAP-FXD 0.01uF +-10% 50 V CER X7R	02010	06035C103KAT
C166	0160-7751	1	CAP-FXD 0.01uF +-10% 50 V CER X7R	02010	06035C103KAT
C167	0160-7751	1	CAP-FXD 0.01uF +-10% 50 V CER X7R	02010	06035C103KAT
C168	0160-7751	1	CAP-FXD 0.01uF +-10% 50 V CER X7R	02010	06035C103KAT
C169	0160-7751	1	CAP-FXD 0.01uF +-10% 50 V CER X7R	02010	06035C103KAT
C170	0160-7751	1	CAP-FXD 0.01uF +-10% 50 V CER X7R	02010	06035C103KAT
C171	0160-7845	1	CAP-FXD 180pF +-5% 50 V CER C0G	02010	06035A181JAT
C172	0160-5953	1	CAP-FXD 270pF +-5% 50 V CER C0G	02010	08055C271JATA
C173	0160-7749	1	CAP-FXD 22pF +-5% 50 V CER C0G	02010	06035A220JAT
C174	0160-7751	1	CAP-FXD 0.01uF +-10% 50 V CER X7R	02010	06035C103KAT
C175	0160-7837	1	CAP-FXD 12pF +-5% 50 V CER C0G	02010	06035A120JAT
C176	0160-7798	1	CAP-FXD 0.1uF +-10% 50 V CER X7R	06352	C2012X7R1H104K
C177	0160-7853	1	CAP-FXD 3.3pF +-7.6% 50 V CER C0G	02010	06035A3R3CAT
C178	0160-7751	1	CAP-FXD 0.01uF +-10% 50 V CER X7R	02010	06035C103KAT
C179	0160-7798	1	CAP-FXD 0.1uF +-10% 50 V CER X7R	06352	C2012X7R1H104K

 **Indicates factory-selected value*

Agilent Part Number E4401-60100
1.5 GHz RF (75 Ohm)

Reference Designator	Agilent Part Number	Qty	Description	Mgr Code	Mfr Part Number
C180	0160-7751	1	CAP-FXD 0.01uF +-10% 50 V CER X7R	02010	06035C103KAT
C181	0160-7751	1	CAP-FXD 0.01uF +-10% 50 V CER X7R	02010	06035C103KAT
C182	0160-7751	1	CAP-FXD 0.01uF +-10% 50 V CER X7R	02010	06035C103KAT
C183	0160-7751	1	CAP-FXD 0.01uF +-10% 50 V CER X7R	02010	06035C103KAT
C184	0160-7798	1	CAP-FXD 0.1uF +-10% 50 V CER X7R	06352	C2012X7R1H104K
C185	0160-7798	1	CAP-FXD 0.1uF +-10% 50 V CER X7R	06352	C2012X7R1H104K
C186	0160-7751	1	CAP-FXD 0.01uF +-10% 50 V CER X7R	02010	06035C103KAT
C187	0160-7751	1	CAP-FXD 0.01uF +-10% 50 V CER X7R	02010	06035C103KAT
C188	0160-7751	1	CAP-FXD 0.01uF +-10% 50 V CER X7R	02010	06035C103KAT
C189	0160-7751	1	CAP-FXD 0.01uF +-10% 50 V CER X7R	02010	06035C103KAT
C190	0160-7798	1	CAP-FXD 0.1uF +-10% 50 V CER X7R	06352	C2012X7R1H104K
C191	0160-7751	1	CAP-FXD 0.01uF +-10% 50 V CER X7R	02010	06035C103KAT
C192	0160-7751	1	CAP-FXD 0.01uF +-10% 50 V CER X7R	02010	06035C103KAT
C193	0160-7751	1	CAP-FXD 0.01uF +-10% 50 V CER X7R	02010	06035C103KAT
C194	0160-7405	1	CAP-FXD 560pF +-5% 50 V CER C0G	06352	C2012C0G1H561J
C195	0160-7798	1	CAP-FXD 0.1uF +-10% 50 V CER X7R	06352	C2012X7R1H104K
C196	0180-4228	1	CAP-FXD 47uF +-20% 10 V TA	02010	TAJD476M010
C197	0160-7988	1	CAP-FXD 470pF +-5% 50 V CER C0G	06352	C1608COG1H471J
C198	0160-7751	1	CAP-FXD 0.01uF +-10% 50 V CER X7R	02010	06035C103KAT
C199	0160-7751	1	CAP-FXD 0.01uF +-10% 50 V CER X7R	02010	06035C103KAT
C200	0160-7798	1	CAP-FXD 0.1uF +-10% 50 V CER X7R	06352	C2012X7R1H104K
C201	0160-7751	1	CAP-FXD 0.01uF +-10% 50 V CER X7R	02010	06035C103KAT
C202	0160-7751	1	CAP-FXD 0.01uF +-10% 50 V CER X7R	02010	06035C103KAT
C203	0160-7798	1	CAP-FXD 0.1uF +-10% 50 V CER X7R	06352	C2012X7R1H104K
C204	0160-7751	1	CAP-FXD 0.01uF +-10% 50 V CER X7R	02010	06035C103KAT
C205	0160-7751	1	CAP-FXD 0.01uF +-10% 50 V CER X7R	02010	06035C103KAT
C206	0160-7751	1	CAP-FXD 0.01uF +-10% 50 V CER X7R	02010	06035C103KAT
C207	0160-7798	1	CAP-FXD 0.1uF +-10% 50 V CER X7R	06352	C2012X7R1H104K
C208	0160-7751	1	CAP-FXD 0.01uF +-10% 50 V CER X7R	02010	06035C103KAT
C209	0160-7751	1	CAP-FXD 0.01uF +-10% 50 V CER X7R	02010	06035C103KAT

**Indicates factory-selected value*

Agilent Part Number E4401-60100
1.5 GHz RF (75 Ohm)

Reference Designator	Agilent Part Number	Qty	Description	Mgr Code	Mfr Part Number
C210	0160-7751	1	CAP-FXD 0.01uF +-10% 50 V CER X7R	02010	06035C103KAT
C211	0160-7798	1	CAP-FXD 0.1uF +-10% 50 V CER X7R	06352	C2012X7R1H104K
C212	0160-7751	1	CAP-FXD 0.01uF +-10% 50 V CER X7R	02010	06035C103KAT
C213	0160-7798	1	CAP-FXD 0.1uF +-10% 50 V CER X7R	06352	C2012X7R1H104K
C214	0160-7798	1	CAP-FXD 0.1uF +-10% 50 V CER X7R	06352	C2012X7R1H104K
C215	0160-7751	1	CAP-FXD 0.01uF +-10% 50 V CER X7R	02010	06035C103KAT
C216	0160-7751	1	CAP-FXD 0.01uF +-10% 50 V CER X7R	02010	06035C103KAT
C217	0160-7798	1	CAP-FXD 0.1uF +-10% 50 V CER X7R	06352	C2012X7R1H104K
C218	0180-4287	1	CAP-FXD 10uF +-20% 35 V TA	02010	TAJD106M035
C219	0160-7781	1	CAP-FXD 2200pF +-10% 50 V CER X7R	02010	06035C222KAT
C220	0160-7798	1	CAP-FXD 0.1uF +-10% 50 V CER X7R	06352	C2012X7R1H104K
C221	0160-7781	1	CAP-FXD 2200pF +-10% 50 V CER X7R	02010	06035C222KAT
C222	0160-7798	1	CAP-FXD 0.1uF +-10% 50 V CER X7R	06352	C2012X7R1H104K
C223	0160-7751	1	CAP-FXD 0.01uF +-10% 50 V CER X7R	02010	06035C103KAT
C224	0160-7751	1	CAP-FXD 0.01uF +-10% 50 V CER X7R	02010	06035C103KAT
C225	0160-7751	1	CAP-FXD 0.01uF +-10% 50 V CER X7R	02010	06035C103KAT
C226	0160-7798	1	CAP-FXD 0.1uF +-10% 50 V CER X7R	06352	C2012X7R1H104K
C227	0160-7751	1	CAP-FXD 0.01uF +-10% 50 V CER X7R	02010	06035C103KAT
C228	0160-7835	1	CAP-FXD 100pF +-5% 50 V CER C0G	02010	06035A101JAT
C229	0160-7835	1	CAP-FXD 100pF +-5% 50 V CER C0G	02010	06035A101JAT
C230	0160-7751	1	CAP-FXD 0.01uF +-10% 50 V CER X7R	02010	06035C103KAT
C231	0180-4287	1	CAP-FXD 10uF +-20% 35 V TA	02010	TAJD106M035
C232	0160-7798	1	CAP-FXD 0.1uF +-10% 50 V CER X7R	06352	C2012X7R1H104K
C233	0160-7751	1	CAP-FXD 0.01uF +-10% 50 V CER X7R	02010	06035C103KAT
C234	0160-7988	1	CAP-FXD 470pF +-5% 50 V CER C0G	06352	C1608COG1H471J
C235	0160-7988	1	CAP-FXD 470pF +-5% 50 V CER C0G	06352	C1608COG1H471J
C236	0160-7711	1	CAP-FXD 4700pF +-10% 50 V CER X7R	02010	06035C472KATRA
C237	0160-7798	1	CAP-FXD 0.1uF +-10% 50 V CER X7R	06352	C2012X7R1H104K
C238	0160-7751	1	CAP-FXD 0.01uF +-10% 50 V CER X7R	02010	06035C103KAT
C239	0160-7711	1	CAP-FXD 4700pF +-10% 50 V CER X7R	02010	06035C472KATRA

 **Indicates factory-selected value*

Agilent Part Number E4401-60100
1.5 GHz RF (75 Ohm)

Reference Designator	Agilent Part Number	Qty	Description	Mgr Code	Mfr Part Number
C240	0160-7988	1	CAP-FXD 470pF +-5% 50 V CER C0G	06352	C1608COG1H471J
C241	0160-7798	1	CAP-FXD 0.1uF +-10% 50 V CER X7R	06352	C2012X7R1H104K
C242	0160-7798	1	CAP-FXD 0.1uF +-10% 50 V CER X7R	06352	C2012X7R1H104K
C243	0160-7798	1	CAP-FXD 0.1uF +-10% 50 V CER X7R	06352	C2012X7R1H104K
C244	0160-7798	1	CAP-FXD 0.1uF +-10% 50 V CER X7R	06352	C2012X7R1H104K
C245	0160-7798	1	CAP-FXD 0.1uF +-10% 50 V CER X7R	06352	C2012X7R1H104K
C246	0160-7835	1	CAP-FXD 100pF +-5% 50 V CER C0G	02010	06035A101JAT
C247	0160-7798	1	CAP-FXD 0.1uF +-10% 50 V CER X7R	06352	C2012X7R1H104K
C248	0160-7809	1	CAP-FXD 0.015uF +-10% 50 V CER X7R	12340	C0603C153K5RAC
C249	0160-7748	1	CAP-FXD 1000pF +-10% 50 V CER X7R	02010	06035C102KAT
C250	0160-7835	1	CAP-FXD 100pF +-5% 50 V CER C0G	02010	06035A101JAT
C251	0160-7855	1	CAP-FXD 33pF +-5% 50 V CER C0G	02010	06035A330JAT
C252	0160-7855	1	CAP-FXD 33pF +-5% 50 V CER C0G	02010	06035A330JAT
C253	0160-7835	1	CAP-FXD 100pF +-5% 50 V CER C0G	02010	06035A101JAT
C254	0160-7835	1	CAP-FXD 100pF +-5% 50 V CER C0G	02010	06035A101JAT
C255	0180-4287	1	CAP-FXD 10uF +-20% 35 V TA	02010	TAJD106M035
C256	0160-7712	1	CAP-FXD 1500pF +-10% 50 V CER X7R	02010	06035C152KATRA
C257	0160-7858	1	CAP-FXD 390pF +-10% 50 V CER X7R	02010	06035C391KAT
C258	0160-7835	1	CAP-FXD 100pF +-5% 50 V CER C0G	02010	06035A101JAT
C259	0180-3751	1	CAP-FXD 1uF +-20% 35 V TA	02010	TAJB105M035
C260	0160-7712	1	CAP-FXD 1500pF +-10% 50 V CER X7R	02010	06035C152KATRA
C261	0160-7712	1	CAP-FXD 1500pF +-10% 50 V CER X7R	02010	06035C152KATRA
C262	0160-7712	1	CAP-FXD 1500pF +-10% 50 V CER X7R	02010	06035C152KATRA
C263	0160-7986	1	CAP-FXD 390pF +-5% 50 V CER C0G	06352	C1608COG1H391J
C264	0160-7986	1	CAP-FXD 390pF +-5% 50 V CER C0G	06352	C1608COG1H391J
C265	0160-7712	1	CAP-FXD 1500pF +-10% 50 V CER X7R	02010	06035C152KATRA
C266	0160-7858	1	CAP-FXD 390pF +-10% 50 V CER X7R	02010	06035C391KAT
C267	0160-7835	1	CAP-FXD 100pF +-5% 50 V CER C0G	02010	06035A101JAT
C268	0160-7835	1	CAP-FXD 100pF +-5% 50 V CER C0G	02010	06035A101JAT
C269	0160-7858	1	CAP-FXD 390pF +-10% 50 V CER X7R	02010	06035C391KAT

**Indicates factory-selected value*

Agilent Part Number E4401-60100
1.5 GHz RF (75 Ohm)

Reference Designator	Agilent Part Number	Qty	Description	Mgr Code	Mfr Part Number
C270	0160-7858	1	CAP-FXD 390pF +-10% 50 V CER X7R	02010	06035C391KAT
C271	0160-7835	1	CAP-FXD 100pF +-5% 50 V CER C0G	02010	06035A101JAT
C272	0160-7835	1	CAP-FXD 100pF +-5% 50 V CER C0G	02010	06035A101JAT
C273	0180-4287	1	CAP-FXD 10uF +-20% 35 V TA	02010	TAJD106M035
C274	0160-7835	1	CAP-FXD 100pF +-5% 50 V CER C0G	02010	06035A101JAT
C275	0180-4287	1	CAP-FXD 10uF +-20% 35 V TA	02010	TAJD106M035
C276	0160-7986	1	CAP-FXD 390pF +-5% 50 V CER C0G	06352	C1608COG1H391J
C277	0160-7986	1	CAP-FXD 390pF +-5% 50 V CER C0G	06352	C1608COG1H391J
C278	0160-7986	1	CAP-FXD 390pF +-5% 50 V CER C0G	06352	C1608COG1H391J
C279	0160-7798	1	CAP-FXD 0.1uF +-10% 50 V CER X7R	06352	C2012X7R1H104K
C280	0160-7798	1	CAP-FXD 0.1uF +-10% 50 V CER X7R	06352	C2012X7R1H104K
C281	0160-7986	1	CAP-FXD 390pF +-5% 50 V CER C0G	06352	C1608COG1H391J
C282	0160-7986	1	CAP-FXD 390pF +-5% 50 V CER C0G	06352	C1608COG1H391J
C283	0160-7986	1	CAP-FXD 390pF +-5% 50 V CER C0G	06352	C1608COG1H391J
C284	0160-7751	1	CAP-FXD 0.01uF +-10% 50 V CER X7R	02010	06035C103KAT
C285	0160-7751	1	CAP-FXD 0.01uF +-10% 50 V CER X7R	02010	06035C103KAT
C286	0160-7856	1	CAP-FXD 330pF +-10% 50 V CER X7R	02010	06035C331KAT
C287	0160-7751	1	CAP-FXD 0.01uF +-10% 50 V CER X7R	02010	06035C103KAT
C288	0160-7751	1	CAP-FXD 0.01uF +-10% 50 V CER X7R	02010	06035C103KAT
C289	0160-7798	1	CAP-FXD 0.1uF +-10% 50 V CER X7R	06352	C2012X7R1H104K
C290	0160-7751	1	CAP-FXD 0.01uF +-10% 50 V CER X7R	02010	06035C103KAT
C291	0160-7751	1	CAP-FXD 0.01uF +-10% 50 V CER X7R	02010	06035C103KAT
C292	0160-7798	1	CAP-FXD 0.1uF +-10% 50 V CER X7R	06352	C2012X7R1H104K
C293	0160-7751	1	CAP-FXD 0.01uF +-10% 50 V CER X7R	02010	06035C103KAT
C294	0160-7749	1	CAP-FXD 22pF +-5% 50 V CER C0G	02010	06035A220JAT
C295	0160-7748	1	CAP-FXD 1000pF +-10% 50 V CER X7R	02010	06035C102KAT
C296	0160-7751	1	CAP-FXD 0.01uF +-10% 50 V CER X7R	02010	06035C103KAT
C297	0160-7856	1	CAP-FXD 330pF +-10% 50 V CER X7R	02010	06035C331KAT
C298	0160-7856	1	CAP-FXD 330pF +-10% 50 V CER X7R	02010	06035C331KAT
C299	0180-3755	1	CAP-FXD 33uF +-20% 10 V TA	02010	TAJD336M010

 **Indicates factory-selected value*

Agilent Part Number E4401-60100
1.5 GHz RF (75 Ohm)

Reference Designator	Agilent Part Number	Qty	Description	Mgr Code	Mfr Part Number
C300	0160-7798	1	CAP-FXD 0.1uF +-10% 50 V CER X7R	06352	C2012X7R1H104K
C301	0160-7751	1	CAP-FXD 0.01uF +-10% 50 V CER X7R	02010	06035C103KAT
C302	0160-7798	1	CAP-FXD 0.1uF +-10% 50 V CER X7R	06352	C2012X7R1H104K
C303	0160-7751	1	CAP-FXD 0.01uF +-10% 50 V CER X7R	02010	06035C103KAT
C304	0180-3755	1	CAP-FXD 33uF +-20% 10 V TA	02010	TAJD336M010
C305	0160-7798	1	CAP-FXD 0.1uF +-10% 50 V CER X7R	06352	C2012X7R1H104K
C306	0160-7798	1	CAP-FXD 0.1uF +-10% 50 V CER X7R	06352	C2012X7R1H104K
C307	0160-7798	1	CAP-FXD 0.1uF +-10% 50 V CER X7R	06352	C2012X7R1H104K
C308	0160-7798	1	CAP-FXD 0.1uF +-10% 50 V CER X7R	06352	C2012X7R1H104K
C309	0160-7798	1	CAP-FXD 0.1uF +-10% 50 V CER X7R	06352	C2012X7R1H104K
C310	0160-7798	1	CAP-FXD 0.1uF +-10% 50 V CER X7R	06352	C2012X7R1H104K
C311	0160-7798	1	CAP-FXD 0.1uF +-10% 50 V CER X7R	06352	C2012X7R1H104K
C312	0160-7798	1	CAP-FXD 0.1uF +-10% 50 V CER X7R	06352	C2012X7R1H104K
C313	0160-7855	1	CAP-FXD 33pF +-5% 50 V CER C0G	02010	06035A330JAT
C314	0160-7855	1	CAP-FXD 33pF +-5% 50 V CER C0G	02010	06035A330JAT
C315	0160-7855	1	CAP-FXD 33pF +-5% 50 V CER C0G	02010	06035A330JAT
C316	0160-7855	1	CAP-FXD 33pF +-5% 50 V CER C0G	02010	06035A330JAT
C317	0160-7855	1	CAP-FXD 33pF +-5% 50 V CER C0G	02010	06035A330JAT
C318	0160-7855	1	CAP-FXD 33pF +-5% 50 V CER C0G	02010	06035A330JAT
C319	0160-7855	1	CAP-FXD 33pF +-5% 50 V CER C0G	02010	06035A330JAT
C320	0160-7855	1	CAP-FXD 33pF +-5% 50 V CER C0G	02010	06035A330JAT
C321	0160-7855	1	CAP-FXD 33pF +-5% 50 V CER C0G	02010	06035A330JAT
C322	0160-7855	1	CAP-FXD 33pF +-5% 50 V CER C0G	02010	06035A330JAT
C323	0160-7748	1	CAP-FXD 1000pF +-10% 50 V CER X7R	02010	06035C102KAT
C324	0160-7835	1	CAP-FXD 100pF +-5% 50 V CER C0G	02010	06035A101JAT
C325	0160-7835	1	CAP-FXD 100pF +-5% 50 V CER C0G	02010	06035A101JAT
C326	0160-7835	1	CAP-FXD 100pF +-5% 50 V CER C0G	02010	06035A101JAT
C327	0160-7835	1	CAP-FXD 100pF +-5% 50 V CER C0G	02010	06035A101JAT
C328	0160-7835	1	CAP-FXD 100pF +-5% 50 V CER C0G	02010	06035A101JAT
C329	0160-7835	1	CAP-FXD 100pF +-5% 50 V CER C0G	02010	06035A101JAT

Agilent Part Number E4401-60100
1.5 GHz RF (75 Ohm)

Reference Designator	Agilent Part Number	Qty	Description	Mgr Code	Mfr Part Number
C330	0180-3755	1	CAP-FXD 33uF +-20% 10 V TA	02010	TAJD336M010
C331	0160-7835	1	CAP-FXD 100pF +-5% 50 V CER C0G	02010	06035A101JAT
C332	0180-4287	1	CAP-FXD 10uF +-20% 35 V TA	02010	TAJD106M035
C333	0180-4287	1	CAP-FXD 10uF +-20% 35 V TA	02010	TAJD106M035
C334	0160-7835	1	CAP-FXD 100pF +-5% 50 V CER C0G	02010	06035A101JAT
C335	0160-7798	1	CAP-FXD 0.1uF +-10% 50 V CER X7R	06352	C2012X7R1H104K
C336	0180-4287	1	CAP-FXD 10uF +-20% 35 V TA	02010	TAJD106M035
C337	0160-7798	1	CAP-FXD 0.1uF +-10% 50 V CER X7R	06352	C2012X7R1H104K
C338	0160-7781	1	CAP-FXD 2200pF +-10% 50 V CER X7R	02010	06035C222KAT
C339	0160-7798	1	CAP-FXD 0.1uF +-10% 50 V CER X7R	06352	C2012X7R1H104K
C340	0160-7798	1	CAP-FXD 0.1uF +-10% 50 V CER X7R	06352	C2012X7R1H104K
C341	0160-7986	1	CAP-FXD 390pF +-5% 50 V CER C0G	06352	C1608COG1H391J
C342	0160-7751	1	CAP-FXD 0.01uF +-10% 50 V CER X7R	02010	06035C103KAT
C343	0160-7986	1	CAP-FXD 390pF +-5% 50 V CER C0G	06352	C1608COG1H391J
C344	0160-7986	1	CAP-FXD 390pF +-5% 50 V CER C0G	06352	C1608COG1H391J
C345	0160-7798	1	CAP-FXD 0.1uF +-10% 50 V CER X7R	06352	C2012X7R1H104K
C346	0160-7986	1	CAP-FXD 390pF +-5% 50 V CER C0G	06352	C1608COG1H391J
C347	0160-7831	1	CAP-FXD 1.2pF +-20.83% 50 V CER C0G	02010	06035A1R2CAT
C348	0160-7986	1	CAP-FXD 390pF +-5% 50 V CER C0G	06352	C1608COG1H391J
C349	0160-7832	1	CAP-FXD 1.5pF +-16.67% 50 V CER C0G	02010	06035A1R5CAT
C350	0160-7834	1	CAP-FXD 10pF +-5% 50 V CER C0G	02010	06035A100JAT
C351	0160-7986	1	CAP-FXD 390pF +-5% 50 V CER C0G	06352	C1608COG1H391J
C352	0160-7834	1	CAP-FXD 10pF +-5% 50 V CER C0G	02010	06035A100JAT
C353	0160-7986	1	CAP-FXD 390pF +-5% 50 V CER C0G	06352	C1608COG1H391J
C354	0160-7986	1	CAP-FXD 390pF +-5% 50 V CER C0G	06352	C1608COG1H391J
C355	0160-7751	1	CAP-FXD 0.01uF +-10% 50 V CER X7R	02010	06035C103KAT
C356	0160-7986	1	CAP-FXD 390pF +-5% 50 V CER C0G	06352	C1608COG1H391J
C357	0160-7751	1	CAP-FXD 0.01uF +-10% 50 V CER X7R	02010	06035C103KAT
C358	0160-7986	1	CAP-FXD 390pF +-5% 50 V CER C0G	06352	C1608COG1H391J
C359	0180-4287	1	CAP-FXD 10uF +-20% 35 V TA	02010	TAJD106M035

 **Indicates factory-selected value*

Agilent Part Number E4401-60100
1.5 GHz RF (75 Ohm)

Reference Designator	Agilent Part Number	Qty	Description	Mgr Code	Mfr Part Number
C360	0160-7798	1	CAP-FXD 0.1uF +-10% 50 V CER X7R	06352	C2012X7R1H104K
C361	0160-7986	1	CAP-FXD 390pF +-5% 50 V CER C0G	06352	C1608COG1H391J
C362	0160-7831	1	CAP-FXD 1.2pF +-20.83% 50 V CER C0G	02010	06035A1R2CAT
C363	0160-7986	1	CAP-FXD 390pF +-5% 50 V CER C0G	06352	C1608COG1H391J
C364	0160-7834	1	CAP-FXD 10pF +-5% 50 V CER C0G	02010	06035A100JAT
C365	0160-7798	1	CAP-FXD 0.1uF +-10% 50 V CER X7R	06352	C2012X7R1H104K
C366	0160-7986	1	CAP-FXD 390pF +-5% 50 V CER C0G	06352	C1608COG1H391J
C367	0160-7834	1	CAP-FXD 10pF +-5% 50 V CER C0G	02010	06035A100JAT
C368	0160-7986	1	CAP-FXD 390pF +-5% 50 V CER C0G	06352	C1608COG1H391J
C369	0160-7986	1	CAP-FXD 390pF +-5% 50 V CER C0G	06352	C1608COG1H391J
C370	0160-7751	1	CAP-FXD 0.01uF +-10% 50 V CER X7R	02010	06035C103KAT
C371	0160-7986	1	CAP-FXD 390pF +-5% 50 V CER C0G	06352	C1608COG1H391J
C372	0160-7986	1	CAP-FXD 390pF +-5% 50 V CER C0G	06352	C1608COG1H391J
C373	0160-7798	1	CAP-FXD 0.1uF +-10% 50 V CER X7R	06352	C2012X7R1H104K
C374	0160-7986	1	CAP-FXD 390pF +-5% 50 V CER C0G	06352	C1608COG1H391J
C375	0160-7831	1	CAP-FXD 1.2pF +-20.83% 50 V CER C0G	02010	06035A1R2CAT
C376	0160-7986	1	CAP-FXD 390pF +-5% 50 V CER C0G	06352	C1608COG1H391J
C378	0160-7834	1	CAP-FXD 10pF +-5% 50 V CER C0G	02010	06035A100JAT
C379	0160-7986	1	CAP-FXD 390pF +-5% 50 V CER C0G	06352	C1608COG1H391J
C380	0160-7834	1	CAP-FXD 10pF +-5% 50 V CER C0G	02010	06035A100JAT
C381	0160-7986	1	CAP-FXD 390pF +-5% 50 V CER C0G	06352	C1608COG1H391J
C382	0160-7986	1	CAP-FXD 390pF +-5% 50 V CER C0G	06352	C1608COG1H391J
C383	0160-7834	1	CAP-FXD 10pF +-5% 50 V CER C0G	02010	06035A100JAT
C384	0160-7751	1	CAP-FXD 0.01uF +-10% 50 V CER X7R	02010	06035C103KAT
C385	0160-7798	1	CAP-FXD 0.1uF +-10% 50 V CER X7R	06352	C2012X7R1H104K
C386	0160-7798	1	CAP-FXD 0.1uF +-10% 50 V CER X7R	06352	C2012X7R1H104K
C387	0160-7986	1	CAP-FXD 390pF +-5% 50 V CER C0G	06352	C1608COG1H391J
C388	0160-7860	1	CAP-FXD 4.7pF +-5.31% 50 V CER C0G	02010	06035A4R7CAT
C389	0180-4287	1	CAP-FXD 10uF +-20% 35 V TA	02010	TAJD106M035
C390	0160-7834	1	CAP-FXD 10pF +-5% 50 V CER C0G	02010	06035A100JAT

Agilent Part Number E4401-60100
1.5 GHz RF (75 Ohm)

Reference Designator	Agilent Part Number	Qty	Description	Mgr Code	Mfr Part Number
C391	0180-4287	1	CAP-FXD 10uF +-20% 35 V TA	02010	TAJD106M035
C392	0160-7835	1	CAP-FXD 100pF +-5% 50 V CER C0G	02010	06035A101JAT
C393	0180-3751	1	CAP-FXD 1uF +-20% 35 V TA	02010	TAJB105M035
C394	0160-7867	1	CAP-FXD 6.8pF +-3.68% 50 V CER C0G	02010	06035A6R8CAT
C395	0160-7867	1	CAP-FXD 6.8pF +-3.68% 50 V CER C0G	02010	06035A6R8CAT
C396	0160-8216	1	CAP-FXD 8.2pF 50 V MOS	02010	08055J8R2CAW
C397	0160-7712	1	CAP-FXD 1500pF +-10% 50 V CER X7R	02010	06035C152KATRA
C398	0160-7835	1	CAP-FXD 100pF +-5% 50 V CER C0G	02010	06035A101JAT
C399	0160-7986	1	CAP-FXD 390pF +-5% 50 V CER C0G	06352	C1608COG1H391J
C400	0160-7986	1	CAP-FXD 390pF +-5% 50 V CER C0G	06352	C1608COG1H391J
C401	0160-7712	1	CAP-FXD 1500pF +-10% 50 V CER X7R	02010	06035C152KATRA
C402	0160-7835	1	CAP-FXD 100pF +-5% 50 V CER C0G	02010	06035A101JAT
C403	0160-7835	1	CAP-FXD 100pF +-5% 50 V CER C0G	02010	06035A101JAT
C404	0160-7835	1	CAP-FXD 100pF +-5% 50 V CER C0G	02010	06035A101JAT
C405	0160-7986	1	CAP-FXD 390pF +-5% 50 V CER C0G	06352	C1608COG1H391J
C406	0160-7986	1	CAP-FXD 390pF +-5% 50 V CER C0G	06352	C1608COG1H391J
C407	0180-4287	1	CAP-FXD 10uF +-20% 35 V TA	02010	TAJD106M035
C408	0160-7835	1	CAP-FXD 100pF +-5% 50 V CER C0G	02010	06035A101JAT
C409	0180-4287	1	CAP-FXD 10uF +-20% 35 V TA	02010	TAJD106M035
C410	0160-7986	1	CAP-FXD 390pF +-5% 50 V CER C0G	06352	C1608COG1H391J
C411	0160-7986	1	CAP-FXD 390pF +-5% 50 V CER C0G	06352	C1608COG1H391J
C412	0160-7986	1	CAP-FXD 390pF +-5% 50 V CER C0G	06352	C1608COG1H391J
C413	0160-7798	1	CAP-FXD 0.1uF +-10% 50 V CER X7R	06352	C2012X7R1H104K
C414	0160-7798	1	CAP-FXD 0.1uF +-10% 50 V CER X7R	06352	C2012X7R1H104K
C415	0160-7986	1	CAP-FXD 390pF +-5% 50 V CER C0G	06352	C1608COG1H391J
C416	0160-7986	1	CAP-FXD 390pF +-5% 50 V CER C0G	06352	C1608COG1H391J
C417	0160-7986	1	CAP-FXD 390pF +-5% 50 V CER C0G	06352	C1608COG1H391J
C418	0160-7986	1	CAP-FXD 390pF +-5% 50 V CER C0G	06352	C1608COG1H391J
C419	0160-7835	1	CAP-FXD 100pF +-5% 50 V CER C0G	02010	06035A101JAT
C420	0160-7751	1	CAP-FXD 0.01uF +-10% 50 V CER X7R	02010	06035C103KAT

 **Indicates factory-selected value*

Agilent Part Number E4401-60100
1.5 GHz RF (75 Ohm)

Reference Designator	Agilent Part Number	Qty	Description	Mgr Code	Mfr Part Number
C421	0160-7835	1	CAP-FXD 100pF +-5% 50 V CER C0G	02010	06035A101JAT
C422	0160-6104	1	CAP-FXD 2200pF +-5% 50 V CER C0G	02010	12065A222JATRA
C423	0160-7751	1	CAP-FXD 0.01uF +-10% 50 V CER X7R	02010	06035C103KAT
C424	0160-6104	1	CAP-FXD 2200pF +-5% 50 V CER C0G	02010	12065A222JATRA
C425	0160-7861	1	CAP-FXD 47pF +-5% 50 V CER C0G	02010	06035A470JAT
C426	0160-7798	1	CAP-FXD 0.1uF +-10% 50 V CER X7R	06352	C2012X7R1H104K
C427	0160-7798	1	CAP-FXD 0.1uF +-10% 50 V CER X7R	06352	C2012X7R1H104K
C428	0160-7861	1	CAP-FXD 47pF +-5% 50 V CER C0G	02010	06035A470JAT
C429	0160-7798	1	CAP-FXD 0.1uF +-10% 50 V CER X7R	06352	C2012X7R1H104K
C430	0160-7798	1	CAP-FXD 0.1uF +-10% 50 V CER X7R	06352	C2012X7R1H104K
C431	0160-7798	1	CAP-FXD 0.1uF +-10% 50 V CER X7R	06352	C2012X7R1H104K
C432	0160-7798	1	CAP-FXD 0.1uF +-10% 50 V CER X7R	06352	C2012X7R1H104K
C433	0160-7798	1	CAP-FXD 0.1uF +-10% 50 V CER X7R	06352	C2012X7R1H104K
C434	0160-7798	1	CAP-FXD 0.1uF +-10% 50 V CER X7R	06352	C2012X7R1H104K
C435	0160-7835	1	CAP-FXD 100pF +-5% 50 V CER C0G	02010	06035A101JAT
C436	0160-7835	1	CAP-FXD 100pF +-5% 50 V CER C0G	02010	06035A101JAT
C437	0160-7986	1	CAP-FXD 390pF +-5% 50 V CER C0G	06352	C1608COG1H391J
C438	0160-7798	1	CAP-FXD 0.1uF +-10% 50 V CER X7R	06352	C2012X7R1H104K
C439	0160-7835	1	CAP-FXD 100pF +-5% 50 V CER C0G	02010	06035A101JAT
C440	0160-7751	1	CAP-FXD 0.01uF +-10% 50 V CER X7R	02010	06035C103KAT
C441	0160-7798	1	CAP-FXD 0.1uF +-10% 50 V CER X7R	06352	C2012X7R1H104K
C442	0160-7835	1	CAP-FXD 100pF +-5% 50 V CER C0G	02010	06035A101JAT
C443	0160-7835	1	CAP-FXD 100pF +-5% 50 V CER C0G	02010	06035A101JAT
C444	0160-7798	1	CAP-FXD 0.1uF +-10% 50 V CER X7R	06352	C2012X7R1H104K
C445	0160-7835	1	CAP-FXD 100pF +-5% 50 V CER C0G	02010	06035A101JAT
C446	0160-7835	1	CAP-FXD 100pF +-5% 50 V CER C0G	02010	06035A101JAT
C447	0160-7751	1	CAP-FXD 0.01uF +-10% 50 V CER X7R	02010	06035C103KAT
C448	0160-7986	1	CAP-FXD 390pF +-5% 50 V CER C0G	06352	C1608COG1H391J
C449	0160-7798	1	CAP-FXD 0.1uF +-10% 50 V CER X7R	06352	C2012X7R1H104K
C450	0160-7835	1	CAP-FXD 100pF +-5% 50 V CER C0G	02010	06035A101JAT

**Indicates factory-selected value*

Agilent Part Number E4401-60100
1.5 GHz RF (75 Ohm)

Reference Designator	Agilent Part Number	Qty	Description	Mgr Code	Mfr Part Number
C451	0160-7835	1	CAP-FXD 100pF +-5% 50 V CER C0G	02010	06035A101JAT
C452	0160-7855	1	CAP-FXD 33pF +-5% 50 V CER C0G	02010	06035A330JAT
C453	0160-7798	1	CAP-FXD 0.1uF +-10% 50 V CER X7R	06352	C2012X7R1H104K
C454	0160-7986	1	CAP-FXD 390pF +-5% 50 V CER C0G	06352	C1608COG1H391J
C455	0180-4287	1	CAP-FXD 10uF +-20% 35 V TA	02010	TAJD106M035
C456	0160-7798	1	CAP-FXD 0.1uF +-10% 50 V CER X7R	06352	C2012X7R1H104K
C457	0180-4287	1	CAP-FXD 10uF +-20% 35 V TA	02010	TAJD106M035
C458	0160-7798	1	CAP-FXD 0.1uF +-10% 50 V CER X7R	06352	C2012X7R1H104K
C459	0180-4287	1	CAP-FXD 10uF +-20% 35 V TA	02010	TAJD106M035
C460	0160-7751	1	CAP-FXD 0.01uF +-10% 50 V CER X7R	02010	06035C103KAT
C461	0180-4287	1	CAP-FXD 10uF +-20% 35 V TA	02010	TAJD106M035
C462	0160-7798	1	CAP-FXD 0.1uF +-10% 50 V CER X7R	06352	C2012X7R1H104K
C463	0160-7781	1	CAP-FXD 2200pF +-10% 50 V CER X7R	02010	06035C222KAT
C464	0160-7798	1	CAP-FXD 0.1uF +-10% 50 V CER X7R	06352	C2012X7R1H104K
C465	0160-7798	1	CAP-FXD 0.1uF +-10% 50 V CER X7R	06352	C2012X7R1H104K
C466	0160-7835	1	CAP-FXD 100pF +-5% 50 V CER C0G	02010	06035A101JAT
C467	0160-7835	1	CAP-FXD 100pF +-5% 50 V CER C0G	02010	06035A101JAT
C468	0160-7749	1	CAP-FXD 22pF +-5% 50 V CER C0G	02010	06035A220JAT
C469	0160-7751	1	CAP-FXD 0.01uF +-10% 50 V CER X7R	02010	06035C103KAT
C470	0160-7748	1	CAP-FXD 1000pF +-10% 50 V CER X7R	02010	06035C102KAT
C471	0160-7748	1	CAP-FXD 1000pF +-10% 50 V CER X7R	02010	06035C102KAT
C472	0160-7748	1	CAP-FXD 1000pF +-10% 50 V CER X7R	02010	06035C102KAT
C473	0160-7751	1	CAP-FXD 0.01uF +-10% 50 V CER X7R	02010	06035C103KAT
C474	0160-7835	1	CAP-FXD 100pF +-5% 50 V CER C0G	02010	06035A101JAT
C475	0160-7835	1	CAP-FXD 100pF +-5% 50 V CER C0G	02010	06035A101JAT
C476	0160-7835	1	CAP-FXD 100pF +-5% 50 V CER C0G	02010	06035A101JAT
C477	0160-7835	1	CAP-FXD 100pF +-5% 50 V CER C0G	02010	06035A101JAT
C478	0160-7751	1	CAP-FXD 0.01uF +-10% 50 V CER X7R	02010	06035C103KAT
C479	0160-7853	1	CAP-FXD 3.3pF +-7.6% 50 V CER C0G	02010	06035A3R3CAT
C480	0160-7751	1	CAP-FXD 0.01uF +-10% 50 V CER X7R	02010	06035C103KAT

 **Indicates factory-selected value*

Agilent Part Number E4401-60100
1.5 GHz RF (75 Ohm)

Reference Designator	Agilent Part Number	Qty	Description	Mgr Code	Mfr Part Number
C481	0160-7835	1	CAP-FXD 100pF +-5% 50 V CER C0G	02010	06035A101JAT
C482	0160-7835	1	CAP-FXD 100pF +-5% 50 V CER C0G	02010	06035A101JAT
C483	0160-7835	1	CAP-FXD 100pF +-5% 50 V CER C0G	02010	06035A101JAT
C484	0160-7751	1	CAP-FXD 0.01uF +-10% 50 V CER X7R	02010	06035C103KAT
C485	0160-7751	1	CAP-FXD 0.01uF +-10% 50 V CER X7R	02010	06035C103KAT
C486	0160-7751	1	CAP-FXD 0.01uF +-10% 50 V CER X7R	02010	06035C103KAT
C487	0160-7751	1	CAP-FXD 0.01uF +-10% 50 V CER X7R	02010	06035C103KAT
C488	0160-7751	1	CAP-FXD 0.01uF +-10% 50 V CER X7R	02010	06035C103KAT
C489	0160-7751	1	CAP-FXD 0.01uF +-10% 50 V CER X7R	02010	06035C103KAT
C490	0160-7751	1	CAP-FXD 0.01uF +-10% 50 V CER X7R	02010	06035C103KAT
C491	0180-4228	1	CAP-FXD 47uF +-20% 10 V TA	02010	TAJD476M010
C492	0160-7405	1	CAP-FXD 560pF +-5% 50 V CER C0G	06352	C2012C0G1H561J
C493	0160-7873	1	CAP-FXD 820pF +-10% 50 V CER X7R	02010	06035C821KAT
C494	0160-7873	1	CAP-FXD 820pF +-10% 50 V CER X7R	02010	06035C821KAT
C495	0160-7842	1	CAP-FXD 150pF +-5% 50 V CER C0G	02010	06035A151JAT
C496	0160-7899	1	CAP-FXD 0.047uF +-10% 16 V CER X7R	06352	C1608X7R1C473K
C497	0160-7864	1	CAP-FXD 56pF +-5% 50 V CER C0G	02010	06035A560JAT
C498	0160-7987	1	CAP-FXD 430pF +-5% 50 V CER C0G	06352	C1608COG1H431J
C499	0160-7988	1	CAP-FXD 470pF +-5% 50 V CER C0G	06352	C1608COG1H471J
C500	0160-7988	1	CAP-FXD 470pF +-5% 50 V CER C0G	06352	C1608COG1H471J
C501	0160-7708	1	CAP-FXD 1000pF +-5% 50 V CER C0G	02010	08055A102JATRA
C502	0160-7766	1	CAP-FXD 820pF +-5% 50 V CER C0G	06352	C2012C0G1H821JT
C503	0160-7766	1	CAP-FXD 820pF +-5% 50 V CER C0G	06352	C2012C0G1H821JT
C504	0160-7798	1	CAP-FXD 0.1uF +-10% 50 V CER X7R	06352	C2012X7R1H104K
C505	0160-7798	1	CAP-FXD 0.1uF +-10% 50 V CER X7R	06352	C2012X7R1H104K
C506	0160-7798	1	CAP-FXD 0.1uF +-10% 50 V CER X7R	06352	C2012X7R1H104K
C507	0160-7798	1	CAP-FXD 0.1uF +-10% 50 V CER X7R	06352	C2012X7R1H104K
C508	0160-7798	1	CAP-FXD 0.1uF +-10% 50 V CER X7R	06352	C2012X7R1H104K
C509	0160-7798	1	CAP-FXD 0.1uF +-10% 50 V CER X7R	06352	C2012X7R1H104K
C510	0160-7798	1	CAP-FXD 0.1uF +-10% 50 V CER X7R	06352	C2012X7R1H104K

**Indicates factory-selected value*

Agilent Part Number E4401-60100
1.5 GHz RF (75 Ohm)

Reference Designator	Agilent Part Number	Qty	Description	Mgr Code	Mfr Part Number
C511	0160-7798	1	CAP-FXD 0.1uF +-10% 50 V CER X7R	06352	C2012X7R1H104K
C512	0160-7798	1	CAP-FXD 0.1uF +-10% 50 V CER X7R	06352	C2012X7R1H104K
C513	0160-7798	1	CAP-FXD 0.1uF +-10% 50 V CER X7R	06352	C2012X7R1H104K
C514	0160-7798	1	CAP-FXD 0.1uF +-10% 50 V CER X7R	06352	C2012X7R1H104K
C515	0160-7798	1	CAP-FXD 0.1uF +-10% 50 V CER X7R	06352	C2012X7R1H104K
C516	0160-7986	1	CAP-FXD 390pF +-5% 50 V CER C0G	06352	C1608COG1H391J
C517	0160-7855	1	CAP-FXD 33pF +-5% 50 V CER C0G	02010	06035A330JAT
C518	0160-7855	1	CAP-FXD 33pF +-5% 50 V CER C0G	02010	06035A330JAT
C519	0160-7855	1	CAP-FXD 33pF +-5% 50 V CER C0G	02010	06035A330JAT
C520	0160-7751	1	CAP-FXD 0.01uF +-10% 50 V CER X7R	02010	06035C103KAT
C521	0160-7751	1	CAP-FXD 0.01uF +-10% 50 V CER X7R	02010	06035C103KAT
C522	0160-7835	1	CAP-FXD 100pF +-5% 50 V CER C0G	02010	06035A101JAT
C523	0160-7835	1	CAP-FXD 100pF +-5% 50 V CER C0G	02010	06035A101JAT
C524	0160-7835	1	CAP-FXD 100pF +-5% 50 V CER C0G	02010	06035A101JAT
C525	0160-7835	1	CAP-FXD 100pF +-5% 50 V CER C0G	02010	06035A101JAT
C526	0160-7835	1	CAP-FXD 100pF +-5% 50 V CER C0G	02010	06035A101JAT
C527	0160-7835	1	CAP-FXD 100pF +-5% 50 V CER C0G	02010	06035A101JAT
C528	0160-7798	1	CAP-FXD 0.1uF +-10% 50 V CER X7R	06352	C2012X7R1H104K
C529	0160-7835	1	CAP-FXD 100pF +-5% 50 V CER C0G	02010	06035A101JAT
C530	0160-7832	1	CAP-FXD 1.5pF +-16.67% 50 V CER C0G	02010	06035A1R5CAT
C531	0160-7798	1	CAP-FXD 0.1uF +-10% 50 V CER X7R	06352	C2012X7R1H104K
C532	0160-7798	1	CAP-FXD 0.1uF +-10% 50 V CER X7R	06352	C2012X7R1H104K
C537	0160-7835	1	CAP-FXD 100pF +-5% 50 V CER C0G	02010	06035A101JAT
C538	0160-7835	1	CAP-FXD 100pF +-5% 50 V CER C0G	02010	06035A101JAT
C539	0160-7835	1	CAP-FXD 100pF +-5% 50 V CER C0G	02010	06035A101JAT
CR1	1900-0264	1	DIODE-SCHOTTKY SM SIG	20057	HSMS-2822
CR2	1900-0273	1	DIODE-PIN	01542	HSMP-3892-BLK
CR3	1900-0273	1	DIODE-PIN	01542	HSMP-3892-BLK
CR4	1900-0273	1	DIODE-PIN	01542	HSMP-3892-BLK
CR5	1902-1543	1	DIODE-ZNR 3.6V 5% TO-236 (SOT-23)	02910	BZX84C3V6

 **Indicates factory-selected value*

Agilent Part Number E4401-60100
1.5 GHz RF (75 Ohm)

Reference Designator	Agilent Part Number	Qty	Description	Mgr Code	Mfr Part Number
CR6	1900-0264	1	DIODE-SCHOTTKY SM SIG	20057	HSMS-2822
CR7	1902-1543	1	DIODE-ZNR 3.6V 5% TO-236 (SOT-23)	02910	BZX84C3V6
CR8	0122-0175	1	DIODE-VVC 1.8PF 10% C 1/C28-TYP9.7	02910	BBY31
CR9	0122-0175	1	DIODE-VVC 1.8PF 10% C 1/C28-TYP9.7	02910	BBY31
CR10	1900-0308	1	DIODE-PIN	01542	HSMP-4810
CR11	1901-1227	1	DIODE-SWITCHING 75V 200MA 6NS TO-236	02910	BAS16
CR12	1902-1646	1	DIODE-ZNR 9.1V PD.225W IR500NA	36633	BZX84C9V1LT1
CR13	1900-0308	1	DIODE-PIN	01542	HSMP-4810
CR14	1900-0308	1	DIODE-PIN	01542	HSMP-4810
CR15	1900-0308	1	DIODE-PIN	01542	HSMP-4810
CR16	1902-1543	1	DIODE-ZNR 3.6V 5% TO-236 (SOT-23)	02910	BZX84C3V6
CR17	1902-1543	1	DIODE-ZNR 3.6V 5% TO-236 (SOT-23)	02910	BZX84C3V6
CR21	1900-0270	1	DIODE-PIN	01542	HSMP-3822
CR22	1900-0270	1	DIODE-PIN	01542	HSMP-3822
CR23	1900-0270	1	DIODE-PIN	01542	HSMP-3822
CR24	1900-0072	1	DIODE-SCHOTTKY SM SIG	37793	HSMS-2820
CR25	0122-0172	1	DIODE-VVC 29PF 10% C 3/C25-MIN5	02910	BBY40
CR26	0122-0172	1	DIODE-VVC 29PF 10% C 3/C25-MIN5	02910	BBY40
CR27	1906-0291	1	DIODE-DUAL 70V 100MA T0-236AA	02910	BAV99
CR28	1906-0291	1	DIODE-DUAL 70V 100MA T0-236AA	02910	BAV99
CR30	1906-0291	1	DIODE-DUAL 70V 100MA T0-236AA	02910	BAV99
CR32	1990-1267	1	LED-LAMP LUM-INT8MCD IF30MA-MAX	14139	AM23ID-F
CR33	1990-1267	1	LED-LAMP LUM-INT8MCD IF30MA-MAX	14139	AM23ID-F
CR34	0122-0189	1	DIODE-VVC 2.1PF 14% C 1/C28-MIN7.5	28480	0122-0189
CR35	0122-0189	1	DIODE-VVC 2.1PF 14% C 1/C28-MIN7.5	28480	0122-0189
CR36	0122-0189	1	DIODE-VVC 2.1PF 14% C 1/C28-MIN7.5	28480	0122-0189
CR37	0122-0189	1	DIODE-VVC 2.1PF 14% C 1/C28-MIN7.5	28480	0122-0189
CR38	0122-0189	1	DIODE-VVC 2.1PF 14% C 1/C28-MIN7.5	28480	0122-0189
CR39	0122-0189	1	DIODE-VVC 2.1PF 14% C 1/C28-MIN7.5	28480	0122-0189
CR40	0122-0189	1	DIODE-VVC 2.1PF 14% C 1/C28-MIN7.5	28480	0122-0189

Agilent Part Number E4401-60100
1.5 GHz RF (75 Ohm)

Reference Designator	Agilent Part Number	Qty	Description	Mgr Code	Mfr Part Number
CR41	0122-0189	1	DIODE-VVC 2.1PF 14% C 1/C28-MIN7.5	28480	0122-0189
CR42	1900-0273	1	DIODE-PIN	01542	HSMP-3892-BLK
CR43	1901-1227	1	DIODE-SWITCHING 75V 200MA 6NS TO-236	02910	BAS16
CR44	1900-0309	1	DIODE-SCHOTTKY SM SIG	01542	HSMS-2827
CR45	1901-1227	1	DIODE-SWITCHING 75V 200MA 6NS TO-236	02910	BAS16
CR46	1900-0273	1	DIODE-PIN	01542	HSMP-3892-BLK
CR47	1902-1592	1	DIODE-ZNR 5.1V 5% TO-236 (SOT-23)	02910	BZX84C5V1
CR48	1900-0273	1	DIODE-PIN	01542	HSMP-3892-BLK
CR49	1901-1227	1	DIODE-SWITCHING 75V 200MA 6NS TO-236	02910	BAS16
CR50	1902-1544	1	DIODE-ZNR 10V 5% TO-236 (SOT-23) PD.35W	02910	BZX84C10
CR51	1900-0309	1	DIODE-SCHOTTKY SM SIG	01542	HSMS-2827
CR52	1901-1227	1	DIODE-SWITCHING 75V 200MA 6NS TO-236	02910	BAS16
CR53	1900-0273	1	DIODE-PIN	01542	HSMP-3892-BLK
CR54	1900-0273	1	DIODE-PIN	01542	HSMP-3892-BLK
CR55	1900-0309	1	DIODE-SCHOTTKY SM SIG	01542	HSMS-2827
CR56	1901-1227	1	DIODE-SWITCHING 75V 200MA 6NS TO-236	02910	BAS16
CR57	1900-0273	1	DIODE-PIN	01542	HSMP-3892-BLK
CR58	1902-1592	1	DIODE-ZNR 5.1V 5% TO-236 (SOT-23)	02910	BZX84C5V1
CR59	1902-1544	1	DIODE-ZNR 10V 5% TO-236 (SOT-23) PD.35W	02910	BZX84C10
CR60	0122-0189	1	DIODE-VVC 2.1PF 14% C 1/C28-MIN7.5	28480	0122-0189
CR61	0122-0189	1	DIODE-VVC 2.1PF 14% C 1/C28-MIN7.5	28480	0122-0189
CR62	1901-1227	1	DIODE-SWITCHING 75V 200MA 6NS TO-236	02910	BAS16
CR63	1900-0309	1	DIODE-SCHOTTKY SM SIG	01542	HSMS-2827
CR64	1901-1227	1	DIODE-SWITCHING 75V 200MA 6NS TO-236	02910	BAS16
CR65	1901-1227	1	DIODE-SWITCHING 75V 200MA 6NS TO-236	02910	BAS16
E1	9170-1421	1	CORE-SHIELDING BEAD	06352	HF50ACB-322513
E2	9170-1421	1	CORE-SHIELDING BEAD	06352	HF50ACB-322513
E3	9170-1584	1	CORE-SHIELDING BEAD	06352	MMZ2012Y102B
E4	9170-1584	1	CORE-SHIELDING BEAD	06352	MMZ2012Y102B
E5	9170-1584	1	CORE-SHIELDING BEAD	06352	MMZ2012Y102B

 **Indicates factory-selected value*

Agilent Part Number E4401-60100
1.5 GHz RF (75 Ohm)

Reference Designator	Agilent Part Number	Qty	Description	Mgr Code	Mfr Part Number
FL1	9135-0461	1	FILTER-SUPPRESSION EMI; SMT; WORKING	09939	NFM61R10T102M 00-621
FL2	9135-0461	1	FILTER-SUPPRESSION EMI; SMT; WORKING	09939	NFM61R10T102M 00-621
FL3	9135-0461	1	FILTER-SUPPRESSION EMI; SMT; WORKING	09939	NFM61R10T102M 00-621
FL4	9135-0461	1	FILTER-SUPPRESSION EMI; SMT; WORKING	09939	NFM61R10T102M 00-621
FL5	9135-0461	1	FILTER-SUPPRESSION EMI; SMT; WORKING	09939	NFM61R10T102M 00-621
FL6	9135-0461	1	FILTER-SUPPRESSION EMI; SMT; WORKING	09939	NFM61R10T102M 00-621
FL7	9135-0461	1	FILTER-SUPPRESSION EMI; SMT; WORKING	09939	NFM61R10T102M 00-621
FL8	9135-0461	1	FILTER-SUPPRESSION EMI; SMT; WORKING	09939	NFM61R10T102M 00-621
FL9	9135-0461	1	FILTER-SUPPRESSION EMI; SMT; WORKING	09939	NFM61R10T102M 00-621
FL10	9135-0461	1	FILTER-SUPPRESSION EMI; SMT; WORKING	09939	NFM61R10T102M 00-621
FL11	9135-0461	1	FILTER-SUPPRESSION EMI; SMT; WORKING	09939	NFM61R10T102M 00-621
FL12	9135-0461	1	FILTER-SUPPRESSION EMI; SMT; WORKING	09939	NFM61R10T102M 00-621
FL13	9135-0461	1	FILTER-SUPPRESSION EMI; SMT; WORKING	09939	NFM61R10T102M 00-621
FL14	9135-0461	1	FILTER-SUPPRESSION EMI; SMT; WORKING	09939	NFM61R10T102M 00-621
FL15	9135-0461	1	FILTER-SUPPRESSION EMI; SMT; WORKING	09939	NFM61R10T102M 00-621
FL16	9135-0461	1	FILTER-SUPPRESSION EMI; SMT; WORKING	09939	NFM61R10T102M 00-621
FL17	9135-0461	1	FILTER-SUPPRESSION EMI; SMT; WORKING	09939	NFM61R10T102M 00-621
FL18	9135-0461	1	FILTER-SUPPRESSION EMI; SMT; WORKING	09939	NFM61R10T102M 00-621
FL19	9135-0461	1	FILTER-SUPPRESSION EMI; SMT; WORKING	09939	NFM61R10T102M 00-621

Agilent Part Number E4401-60100
1.5 GHz RF (75 Ohm)

Reference Designator	Agilent Part Number	Qty	Description	Mgr Code	Mfr Part Number
FL20	9135-0461	1	FILTER-SUPPRESSION EMI; SMT; WORKING	09939	NFM61R10T102M 00-621
FL21	9135-0461	1	FILTER-SUPPRESSION EMI; SMT; WORKING	09939	NFM61R10T102M 00-621
FL22	9135-0461	1	FILTER-SUPPRESSION EMI; SMT; WORKING	09939	NFM61R10T102M 00-621
FL23	9135-0461	1	FILTER-SUPPRESSION EMI; SMT; WORKING	09939	NFM61R10T102M 00-621
FL24	9135-0461	1	FILTER-SUPPRESSION EMI; SMT; WORKING	09939	NFM61R10T102M 00-621
FL25	9135-0461	1	FILTER-SUPPRESSION EMI; SMT; WORKING	09939	NFM61R10T102M 00-621
FL26	9135-0461	1	FILTER-SUPPRESSION EMI; SMT; WORKING	09939	NFM61R10T102M 00-621
FL27	9135-0461	1	FILTER-SUPPRESSION EMI; SMT; WORKING	09939	NFM61R10T102M 00-621
FL28	9135-0461	1	FILTER-SUPPRESSION EMI; SMT; WORKING	09939	NFM61R10T102M 00-621
FL29	9135-0461	1	FILTER-SUPPRESSION EMI; SMT; WORKING	09939	NFM61R10T102M 00-621
FL30	9135-0461	1	FILTER-SUPPRESSION EMI; SMT; WORKING	09939	NFM61R10T102M 00-621
FL31	9135-0461	1	FILTER-SUPPRESSION EMI; SMT; WORKING	09939	NFM61R10T102M 00-621
J1	1252-7020	1	CONN-RECT MICRORBN 40-CKT 40-CONT	01380	557102-5
J2	1252-1543	1	CONN-POST TYPE .100-PIN-SPCG-MTG-END	01380	641215-6
J3	1250-0257	1	CONNECTOR-RF SMB MALE PC-W-STDFS 50-OHM	01380	413990-3
J4	1250-0257	1	CONNECTOR-RF SMB MALE PC-W-STDFS 50-OHM	01380	413990-3
J5	1250-0257	1	CONNECTOR-RF SMB MALE PC-W-STDFS 50-OHM	01380	413990-3
J6	1250-0257	1	CONNECTOR-RF SMB MALE PC-W-STDFS 50-OHM	01380	413990-3
J7	1250-0257	1	CONNECTOR-RF SMB MALE PC-W-STDFS 50-OHM	01380	413990-3
J8	1250-2485	1	CONNECTOR-RF OSMT MALE PC-W/O-STDF	01380	1055688-1

 **Indicates factory-selected value*

Agilent Part Number E4401-60100
1.5 GHz RF (75 Ohm)

Reference Designator	Agilent Part Number	Qty	Description	Mgr Code	Mfr Part Number
J9	1250-2485	1	CONNECTOR-RF OSMT MALE PC-W/O-STDF	01380	1055688-1
J10	1250-2792	1	CONNECTOR-RF BNC MALE PANEL MOUNT 75-OHM	01380	96-3137-022-01
J11	1250-2747	1	CONNECTOR-RF BNC FEMALE 4-HOLE-FLG-FR	05879	31-105
J12	1250-2747	1	CONNECTOR-RF BNC FEMALE 4-HOLE-FLG-FR	05879	31-105
J13	1250-2487	1	CONNECTOR-RF SM-SNP MALE THD-HOLE 50-OHM	01380	414895-1
K1	0490-1884	1	RELAY 2C 5VDC	03264	432-7530
K2	0490-1884	1	RELAY 2C 5VDC	03264	432-7530
K3	0490-1884	1	RELAY 2C 5VDC	03264	432-7530
K4	0490-1884	1	RELAY 2C 5VDC	03264	432-7530
K5	0490-1884	1	RELAY 2C 5VDC	03264	432-7530
K6	0490-1884	1	RELAY 2C 5VDC	03264	432-7530
K7	0490-1884	1	RELAY 2C 5VDC	03264	432-7530
L1	9140-0738	1	INDUCTOR 100uH .6W-INX.7LG-IN	01869	52405
L2	9140-0738	1	INDUCTOR 100uH .6W-INX.7LG-IN	01869	52405
L3	9140-0738	1	INDUCTOR 100uH .6W-INX.7LG-IN	01869	52405
L4	9140-0736	1	INDUCTOR 200uH .3W-INX.4LG-IN	05524	ITP-1031-32
L5	9140-0736	1	INDUCTOR 200uH .3W-INX.4LG-IN	05524	ITP-1031-32
L6	9140-2055	1	INDUCTOR 3.9nH +10% -10%	06353	LL2012-F3N9K
L7	9140-2055	1	INDUCTOR 3.9nH +10% -10%	06353	LL2012-F3N9K
L8	9140-1944	1	INDUCTOR 6.8nH +5% -5% 1.27W-mmX2.2LG-mm	06353	LL2012-F6N8J
L9	9140-1425	1	INDUCTOR 270nH +-5% 2.8W-mmX3.4LG-mm	06352	NL322522T-R27J
L10	9140-1104	1	INDUCTOR 820nH +-5% 2.8W-mmX3.4LG-mm	09891	KL32TER82J
L11	9140-1424	1	INDUCTOR 180nH +-5% 2.8W-mmX3.4LG-mm	06352	NL322522T-R18J
L12	9140-1424	1	INDUCTOR 180nH +-5% 2.8W-mmX3.4LG-mm	06352	NL322522T-R18J
L13	9140-1099	1	INDUCTOR 220nH +-5% 2.8W-mmX3.4LG-mm	09891	KL32TER22J
L14	9140-1430	1	INDUCTOR 12uH +-5% 3.4W-mmX4.8LG-mm Q50	28480	9140-1430
L15	9140-1430	1	INDUCTOR 12uH +-5% 3.4W-mmX4.8LG-mm Q50	28480	9140-1430
L16	9140-1430	1	INDUCTOR 12uH +-5% 3.4W-mmX4.8LG-mm Q50	28480	9140-1430

**Indicates factory-selected value*

Agilent Part Number E4401-60100
1.5 GHz RF (75 Ohm)

Reference Designator	Agilent Part Number	Qty	Description	Mgr Code	Mfr Part Number
L17	9140-1101	1	INDUCTOR 470nH +-5% 2.8W-mmX3.4LG-mm	09891	KL32TER47J
L18	9140-1101	1	INDUCTOR 470nH +-5% 2.8W-mmX3.4LG-mm	09891	KL32TER47J
L19	9140-1430	1	INDUCTOR 12uH +-5% 3.4W-mmX4.8LG-mm Q50	28480	9140-1430
L20	9140-1430	1	INDUCTOR 12uH +-5% 3.4W-mmX4.8LG-mm Q50	28480	9140-1430
L21	9140-1422	1	INDUCTOR 1.8uH +-5% 3.4W-mmX4.8LG-mm	28480	9140-1422
L22	9140-1238	1	INDUCTOR 10uH +-5% 2.8W-mmX3.4LG-mm Q30	06352	NL322522T-100J
L23	9140-2055	1	INDUCTOR 3.9nH +10% -10%	06353	LL2012-F3N9K
L24	9140-1109	1	INDUCTOR 4.7uH +-5% 3.4W-mmX4.8LG-mm	06352	NL453232-4R7J
L25	9140-1109	1	INDUCTOR 4.7uH +-5% 3.4W-mmX4.8LG-mm	06352	NL453232-4R7J
L26	9140-1508	1	INDUCTOR 100uH +-5% 2.8W-mmX3.4LG-mm	06352	NL322522T-101J
L27	9140-1206	1	INDUCTOR 100nH +-5% 2.8W-mmX3.4LG-mm	06352	NL322522T-R10J
L28	9140-1206	1	INDUCTOR 100nH +-5% 2.8W-mmX3.4LG-mm	06352	NL322522T-R10J
L29	9140-1205	1	INDUCTOR 82nH +-5% 2.8W-mmX3.4LG-mm Q27	09891	KL32TE082J
L30	9140-1205	1	INDUCTOR 82nH +-5% 2.8W-mmX3.4LG-mm Q27	09891	KL32TE082J
L31	9140-1206	1	INDUCTOR 100nH +-5% 2.8W-mmX3.4LG-mm	06352	NL322522T-R10J
L32	9140-1206	1	INDUCTOR 100nH +-5% 2.8W-mmX3.4LG-mm	06352	NL322522T-R10J
L33	9140-1206	1	INDUCTOR 100nH +-5% 2.8W-mmX3.4LG-mm	06352	NL322522T-R10J
L34	9140-1200	1	INDUCTOR 33nH +-5% 2.8W-mmX3.4LG-mm Q25	09891	KL32TE033J
L36	9140-1113	1	INDUCTOR 10uH +-5% 3.4W-mmX4.8LG-mm Q50	28480	9140-1113
L37	9140-1113	1	INDUCTOR 10uH +-5% 3.4W-mmX4.8LG-mm Q50	28480	9140-1113
L38	9140-1206	1	INDUCTOR 100nH +-5% 2.8W-mmX3.4LG-mm	06352	NL322522T-R10J
L39	9140-1206	1	INDUCTOR 100nH +-5% 2.8W-mmX3.4LG-mm	06352	NL322522T-R10J
L40	9140-1206	1	INDUCTOR 100nH +-5% 2.8W-mmX3.4LG-mm	06352	NL322522T-R10J
L44	9140-1206	1	INDUCTOR 100nH +-5% 2.8W-mmX3.4LG-mm	06352	NL322522T-R10J
L45	9140-1206	1	INDUCTOR 100nH +-5% 2.8W-mmX3.4LG-mm	06352	NL322522T-R10J
L46	9140-1206	1	INDUCTOR 100nH +-5% 2.8W-mmX3.4LG-mm	06352	NL322522T-R10J
L49	9140-1206	1	INDUCTOR 100nH +-5% 2.8W-mmX3.4LG-mm	06352	NL322522T-R10J
L50	9140-1206	1	INDUCTOR 100nH +-5% 2.8W-mmX3.4LG-mm	06352	NL322522T-R10J
L51	9140-1206	1	INDUCTOR 100nH +-5% 2.8W-mmX3.4LG-mm	06352	NL322522T-R10J
L55	9140-1425	1	INDUCTOR 270nH +-5% 2.8W-mmX3.4LG-mm	06352	NL322522T-R27J

 **Indicates factory-selected value*

Agilent Part Number E4401-60100
1.5 GHz RF (75 Ohm)

Reference Designator	Agilent Part Number	Qty	Description	Mgr Code	Mfr Part Number
L56	9140-1206	1	INDUCTOR 100nH +-5% 2.8W-mmX3.4LG-mm	06352	NL322522T-R10J
L57	9140-1206	1	INDUCTOR 100nH +-5% 2.8W-mmX3.4LG-mm	06352	NL322522T-R10J
L58	9140-1206	1	INDUCTOR 100nH +-5% 2.8W-mmX3.4LG-mm	06352	NL322522T-R10J
L59	9140-1206	1	INDUCTOR 100nH +-5% 2.8W-mmX3.4LG-mm	06352	NL322522T-R10J
L60	9135-0069	1	INDUCTOR 30nH +-5% 2.6D-mmX6.6LG-mm Q60	03273	10M030X-1
L61	9140-1206	1	INDUCTOR 100nH +-5% 2.8W-mmX3.4LG-mm	06352	NL322522T-R10J
L62	9140-1206	1	INDUCTOR 100nH +-5% 2.8W-mmX3.4LG-mm	06352	NL322522T-R10J
L63	9140-1206	1	INDUCTOR 100nH +-5% 2.8W-mmX3.4LG-mm	06352	NL322522T-R10J
L64	9140-1238	1	INDUCTOR 10uH +-5% 2.8W-mmX3.4LG-mm Q30	06352	NL322522T-100J
L65	9140-1418	1	INDUCTOR 2.7uH +-5% 3.4W-mmX4.8LG-mm	28480	9140-1418
L66	9140-1238	1	INDUCTOR 10uH +-5% 2.8W-mmX3.4LG-mm Q30	06352	NL322522T-100J
L67	9140-1194	1	INDUCTOR 10nH +-10% 2.8W-mmX3.4LG-mm	09891	KL32TE010K
L68	9140-1194	1	INDUCTOR 10nH +-10% 2.8W-mmX3.4LG-mm	09891	KL32TE010K
L69	9140-1104	1	INDUCTOR 820nH +-5% 2.8W-mmX3.4LG-mm	09891	KL32TER82J
L70	9140-1104	1	INDUCTOR 820nH +-5% 2.8W-mmX3.4LG-mm	09891	KL32TER82J
L71	9140-1104	1	INDUCTOR 820nH +-5% 2.8W-mmX3.4LG-mm	09891	KL32TER82J
L72	9140-1104	1	INDUCTOR 820nH +-5% 2.8W-mmX3.4LG-mm	09891	KL32TER82J
L750	9140-1953	1	INDUCTOR 5.6nH 1.27W-mmX2.2LG-mm Q15	06353	LL2012-F5N6S
MP10	E4401-20047	1	SHLD-RF FRAME	28480	E4401-20047
MP11	E4401-60048	1	SHLD AY-RF TOP	28480	E4401-60048
MP13	E4401-20053	1	CAV BLK-BPF CAST	28480	E4401-20053
MP14	E4401-20034	1	BPF CAVITY COVER	28480	E4401-20034
MP15	E4401-00021	1	COVER-INPUT CONN	28480	E4401-00021
MP20	E4401-00014	1	BPF CPLG LOOP	28480	E4401-00014
MP21	E4401-00020	1	BPF CPLNG LP#2	28480	E4401-00020

**Indicates factory-selected value*

Agilent Part Number E4401-60100
1.5 GHz RF (75 Ohm)

Reference Designator	Agilent Part Number	Qty	Description	Mgr Code	Mfr Part Number
MP22	E4401-40017	1	GUIDE-CPLNG LP#2	28480	E4401-40017
MP24	E4401-20024	1	GASKET-75 OHM	28480	E4401-20024
MP25	E4401-60098	1	SHLD AY-RF BTM	28480	E4401-60098
MP26	0515-0366	1	SCREW-MACH M2.5 X 0.45 6MM-LG PAN-HD	05610	0515-0366
MP27	0515-0366	1	SCREW-MACH M2.5 X 0.45 6MM-LG PAN-HD	05610	0515-0366
MP28	0515-0366	1	SCREW-MACH M2.5 X 0.45 6MM-LG PAN-HD	05610	0515-0366
MP29	0515-0366	1	SCREW-MACH M2.5 X 0.45 6MM-LG PAN-HD	05610	0515-0366
MP30	0515-0366	1	SCREW-MACH M2.5 X 0.45 6MM-LG PAN-HD	05610	0515-0366
MP31	0515-0366	1	SCREW-MACH M2.5 X 0.45 6MM-LG PAN-HD	05610	0515-0366
MP32	0515-0366	1	SCREW-MACH M2.5 X 0.45 6MM-LG PAN-HD	05610	0515-0366
MP33	0515-0366	1	SCREW-MACH M2.5 X 0.45 6MM-LG PAN-HD	05610	0515-0366
MP34	0515-0372	1	SCREW-MACHINE ASSEMBLY M3 X 0.5 8MM-LG	05610	0515-0372
MP35	0515-0372	1	SCREW-MACHINE ASSEMBLY M3 X 0.5 8MM-LG	05610	0515-0372
MP36	0515-0372	1	SCREW-MACHINE ASSEMBLY M3 X 0.5 8MM-LG	05610	0515-0372
MP37	0515-0372	1	SCREW-MACHINE ASSEMBLY M3 X 0.5 8MM-LG	05610	0515-0372
MP38	0515-0372	1	SCREW-MACHINE ASSEMBLY M3 X 0.5 8MM-LG	05610	0515-0372
MP39	0515-0372	1	SCREW-MACHINE ASSEMBLY M3 X 0.5 8MM-LG	05610	0515-0372
MP40	0515-0372	1	SCREW-MACHINE ASSEMBLY M3 X 0.5 8MM-LG	05610	0515-0372
MP41	0515-0372	1	SCREW-MACHINE ASSEMBLY M3 X 0.5 8MM-LG	05610	0515-0372
MP42	0515-0372	1	SCREW-MACHINE ASSEMBLY M3 X 0.5 8MM-LG	05610	0515-0372
MP43	0515-0372	1	SCREW-MACHINE ASSEMBLY M3 X 0.5 8MM-LG	05610	0515-0372

 **Indicates factory-selected value*

Agilent Part Number E4401-60100
1.5 GHz RF (75 Ohm)

Reference Designator	Agilent Part Number	Qty	Description	Mgr Code	Mfr Part Number
MP44	0515-0372	1	SCREW-MACHINE ASSEMBLY M3 X 0.5 8MM-LG	05610	0515-0372
MP45	0515-0372	1	SCREW-MACHINE ASSEMBLY M3 X 0.5 8MM-LG	05610	0515-0372
MP46	0515-0372	1	SCREW-MACHINE ASSEMBLY M3 X 0.5 8MM-LG	05610	0515-0372
MP47	0515-0372	1	SCREW-MACHINE ASSEMBLY M3 X 0.5 8MM-LG	05610	0515-0372
MP48	0515-0372	1	SCREW-MACHINE ASSEMBLY M3 X 0.5 8MM-LG	05610	0515-0372
MP49	0515-0372	1	SCREW-MACHINE ASSEMBLY M3 X 0.5 8MM-LG	05610	0515-0372
MP50	0515-0372	1	SCREW-MACHINE ASSEMBLY M3 X 0.5 8MM-LG	05610	0515-0372
MP51	0515-0372	1	SCREW-MACHINE ASSEMBLY M3 X 0.5 8MM-LG	05610	0515-0372
MP52	0515-0372	1	SCREW-MACHINE ASSEMBLY M3 X 0.5 8MM-LG	05610	0515-0372
MP53	0515-0372	1	SCREW-MACHINE ASSEMBLY M3 X 0.5 8MM-LG	05610	0515-0372
MP54	0515-0372	1	SCREW-MACHINE ASSEMBLY M3 X 0.5 8MM-LG	05610	0515-0372
MP55	0515-0372	1	SCREW-MACHINE ASSEMBLY M3 X 0.5 8MM-LG	05610	0515-0372
MP56	0515-0372	1	SCREW-MACHINE ASSEMBLY M3 X 0.5 8MM-LG	05610	0515-0372
MP57	0515-0372	1	SCREW-MACHINE ASSEMBLY M3 X 0.5 8MM-LG	05610	0515-0372
MP58	0515-0372	1	SCREW-MACHINE ASSEMBLY M3 X 0.5 8MM-LG	05610	0515-0372
MP59	0515-0372	1	SCREW-MACHINE ASSEMBLY M3 X 0.5 8MM-LG	05610	0515-0372
MP60	0515-0372	1	SCREW-MACHINE ASSEMBLY M3 X 0.5 8MM-LG	05610	0515-0372
MP61	0515-0372	1	SCREW-MACHINE ASSEMBLY M3 X 0.5 8MM-LG	05610	0515-0372
MP62	0515-0372	1	SCREW-MACHINE ASSEMBLY M3 X 0.5 8MM-LG	05610	0515-0372

Agilent Part Number E4401-60100
1.5 GHz RF (75 Ohm)

Reference Designator	Agilent Part Number	Qty	Description	Mgr Code	Mfr Part Number
MP63	0515-0372	1	SCREW-MACHINE ASSEMBLY M3 X 0.5 8MM-LG	05610	0515-0372
MP64	0515-0372	1	SCREW-MACHINE ASSEMBLY M3 X 0.5 8MM-LG	05610	0515-0372
MP65	0515-0372	1	SCREW-MACHINE ASSEMBLY M3 X 0.5 8MM-LG	05610	0515-0372
MP66	0515-0372	1	SCREW-MACHINE ASSEMBLY M3 X 0.5 8MM-LG	05610	0515-0372
MP67	0515-0372	1	SCREW-MACHINE ASSEMBLY M3 X 0.5 8MM-LG	05610	0515-0372
MP68	0515-0372	1	SCREW-MACHINE ASSEMBLY M3 X 0.5 8MM-LG	05610	0515-0372
MP69	0515-0372	1	SCREW-MACHINE ASSEMBLY M3 X 0.5 8MM-LG	05610	0515-0372
MP70	0515-0372	1	SCREW-MACHINE ASSEMBLY M3 X 0.5 8MM-LG	05610	0515-0372
MP71	0515-0372	1	SCREW-MACHINE ASSEMBLY M3 X 0.5 8MM-LG	05610	0515-0372
MP72	0515-0372	1	SCREW-MACHINE ASSEMBLY M3 X 0.5 8MM-LG	05610	0515-0372
MP73	0515-0372	1	SCREW-MACHINE ASSEMBLY M3 X 0.5 8MM-LG	05610	0515-0372
MP74	0515-0372	1	SCREW-MACHINE ASSEMBLY M3 X 0.5 8MM-LG	05610	0515-0372
MP75	0515-0372	1	SCREW-MACHINE ASSEMBLY M3 X 0.5 8MM-LG	05610	0515-0372
MP76	0515-0372	1	SCREW-MACHINE ASSEMBLY M3 X 0.5 8MM-LG	05610	0515-0372
MP77	0515-0372	1	SCREW-MACHINE ASSEMBLY M3 X 0.5 8MM-LG	05610	0515-0372
MP78	0515-0372	1	SCREW-MACHINE ASSEMBLY M3 X 0.5 8MM-LG	05610	0515-0372
MP79	0515-0375	1	SCREW-MACHINE ASSEMBLY M3 X 0.5 16MM-LG	05610	0515-0375
MP80	0515-0375	1	SCREW-MACHINE ASSEMBLY M3 X 0.5 16MM-LG	05610	0515-0375
MP81	0515-0375	1	SCREW-MACHINE ASSEMBLY M3 X 0.5 16MM-LG	05610	0515-0375

 **Indicates factory-selected value*

Agilent Part Number E4401-60100
1.5 GHz RF (75 Ohm)

Reference Designator	Agilent Part Number	Qty	Description	Mgr Code	Mfr Part Number
MP82	0515-0375	1	SCREW-MACHINE ASSEMBLY M3 X 0.5 16MM-LG	05610	0515-0375
MP83	0515-0375	1	SCREW-MACHINE ASSEMBLY M3 X 0.5 16MM-LG	05610	0515-0375
MP84	0515-0375	1	SCREW-MACHINE ASSEMBLY M3 X 0.5 16MM-LG	05610	0515-0375
MP85	0515-0375	1	SCREW-MACHINE ASSEMBLY M3 X 0.5 16MM-LG	05610	0515-0375
MP86	0515-0375	1	SCREW-MACHINE ASSEMBLY M3 X 0.5 16MM-LG	05610	0515-0375
MP87	0515-0375	1	SCREW-MACHINE ASSEMBLY M3 X 0.5 16MM-LG	05610	0515-0375
MP88	0515-0375	1	SCREW-MACHINE ASSEMBLY M3 X 0.5 16MM-LG	05610	0515-0375
MP89	0515-0375	1	SCREW-MACHINE ASSEMBLY M3 X 0.5 16MM-LG	05610	0515-0375
MP90	0515-0375	1	SCREW-MACHINE ASSEMBLY M3 X 0.5 16MM-LG	05610	0515-0375
MP91	0515-0375	1	SCREW-MACHINE ASSEMBLY M3 X 0.5 16MM-LG	05610	0515-0375
MP92	0515-0375	1	SCREW-MACHINE ASSEMBLY M3 X 0.5 16MM-LG	05610	0515-0375
MP93	0515-0375	1	SCREW-MACHINE ASSEMBLY M3 X 0.5 16MM-LG	05610	0515-0375
MP94	0515-0375	1	SCREW-MACHINE ASSEMBLY M3 X 0.5 16MM-LG	05610	0515-0375
MP95	0515-0375	1	SCREW-MACHINE ASSEMBLY M3 X 0.5 16MM-LG	05610	0515-0375
MP96	0515-0375	1	SCREW-MACHINE ASSEMBLY M3 X 0.5 16MM-LG	05610	0515-0375
MP97	0515-0375	1	SCREW-MACHINE ASSEMBLY M3 X 0.5 16MM-LG	05610	0515-0375
MP98	0515-0375	1	SCREW-MACHINE ASSEMBLY M3 X 0.5 16MM-LG	05610	0515-0375
MP99	0515-0375	1	SCREW-MACHINE ASSEMBLY M3 X 0.5 16MM-LG	05610	0515-0375
MP100	0515-0375	1	SCREW-MACHINE ASSEMBLY M3 X 0.5 16MM-LG	05610	0515-0375

Agilent Part Number E4401-60100
1.5 GHz RF (75 Ohm)

Reference Designator	Agilent Part Number	Qty	Description	Mgr Code	Mfr Part Number
MP101	0515-0375	1	SCREW-MACHINE ASSEMBLY M3 X 0.5 16MM-LG	05610	0515-0375
MP102	0515-0375	1	SCREW-MACHINE ASSEMBLY M3 X 0.5 16MM-LG	05610	0515-0375
MP103	0515-0375	1	SCREW-MACHINE ASSEMBLY M3 X 0.5 16MM-LG	05610	0515-0375
MP104	0515-0375	1	SCREW-MACHINE ASSEMBLY M3 X 0.5 16MM-LG	05610	0515-0375
MP105	0515-0375	1	SCREW-MACHINE ASSEMBLY M3 X 0.5 16MM-LG	05610	0515-0375
MP106	0515-0375	1	SCREW-MACHINE ASSEMBLY M3 X 0.5 16MM-LG	05610	0515-0375
MP107	0515-0375	1	SCREW-MACHINE ASSEMBLY M3 X 0.5 16MM-LG	05610	0515-0375
MP108	0515-0375	1	SCREW-MACHINE ASSEMBLY M3 X 0.5 16MM-LG	05610	0515-0375
MP109	0515-0375	1	SCREW-MACHINE ASSEMBLY M3 X 0.5 16MM-LG	05610	0515-0375
MP110	0515-0375	1	SCREW-MACHINE ASSEMBLY M3 X 0.5 16MM-LG	05610	0515-0375
MP111	0515-0375	1	SCREW-MACHINE ASSEMBLY M3 X 0.5 16MM-LG	05610	0515-0375
MP112	0515-0375	1	SCREW-MACHINE ASSEMBLY M3 X 0.5 16MM-LG	05610	0515-0375
MP113	0515-0375	1	SCREW-MACHINE ASSEMBLY M3 X 0.5 16MM-LG	05610	0515-0375
MP114	0515-0375	1	SCREW-MACHINE ASSEMBLY M3 X 0.5 16MM-LG	05610	0515-0375
MP115	0515-0375	1	SCREW-MACHINE ASSEMBLY M3 X 0.5 16MM-LG	05610	0515-0375
MP116	0515-0375	1	SCREW-MACHINE ASSEMBLY M3 X 0.5 16MM-LG	05610	0515-0375
MP117	0515-0375	1	SCREW-MACHINE ASSEMBLY M3 X 0.5 16MM-LG	05610	0515-0375
MP118	0515-0375	1	SCREW-MACHINE ASSEMBLY M3 X 0.5 16MM-LG	05610	0515-0375
MP119	0515-0375	1	SCREW-MACHINE ASSEMBLY M3 X 0.5 16MM-LG	05610	0515-0375

 **Indicates factory-selected value*

Agilent Part Number E4401-60100
1.5 GHz RF (75 Ohm)

Reference Designator	Agilent Part Number	Qty	Description	Mgr Code	Mfr Part Number
MP120	0515-1042	1	SCREW-SKT-HD-CAP M1.6 X 0.35 3MM-LG	06691	0515-1042
MP121	0515-1042	1	SCREW-SKT-HD-CAP M1.6 X 0.35 3MM-LG	06691	0515-1042
MP122	0515-2487	1	SCREW-MACH M2.5 X 0.45 8MM-LG	12384	0515-2487
MP123	0515-2487	1	SCREW-MACH M2.5 X 0.45 8MM-LG	12384	0515-2487
MP124	0515-2487	1	SCREW-MACH M2.5 X 0.45 8MM-LG	12384	0515-2487
MP125	0515-2487	1	SCREW-MACH M2.5 X 0.45 8MM-LG	12384	0515-2487
MP126	8160-0448		RFI ROUND STRIP BE-CU SN-PL .062-IN-OD	10840	SS-04
Q1	1855-0734	1	TRANSISTOR MOSFET 2N7002 N-CHAN E-MODE	02910	2N7002
Q2	1855-0734	1	TRANSISTOR MOSFET 2N7002 N-CHAN E-MODE	02910	2N7002
Q3	1855-0734	1	TRANSISTOR MOSFET 2N7002 N-CHAN E-MODE	02910	2N7002
Q4	1854-1037	1	TRANSISTOR NPN SI TO-236AA PD350MW	00746	SST3904T116
Q5	1853-0567	1	TRANSISTOR PNP SI SOT-23 (TO-236AB)	00746	SST3906T116
Q6	1855-0935	1	TRANSISTOR GAAS FET N-CHAN D-MODE	28480	1855-0935
Q7	1855-0935	1	TRANSISTOR GAAS FET N-CHAN D-MODE	28480	1855-0935
Q8	1853-0567	1	TRANSISTOR PNP SI SOT-23 (TO-236AB)	00746	SST3906T116
Q9	1855-0935	1	TRANSISTOR GAAS FET N-CHAN D-MODE	28480	1855-0935
Q10	1853-0567	1	TRANSISTOR PNP SI SOT-23 (TO-236AB)	00746	SST3906T116
Q11	1855-0935	1	TRANSISTOR GAAS FET N-CHAN D-MODE	28480	1855-0935
Q12	1853-0567	1	TRANSISTOR PNP SI SOT-23 (TO-236AB)	00746	SST3906T116
Q13	1855-0935	1	TRANSISTOR GAAS FET N-CHAN D-MODE	28480	1855-0935
Q14	1853-0567	1	TRANSISTOR PNP SI SOT-23 (TO-236AB)	00746	SST3906T116
Q15	1855-0935	1	TRANSISTOR GAAS FET N-CHAN D-MODE	28480	1855-0935
Q16	1855-0935	1	TRANSISTOR GAAS FET N-CHAN D-MODE	28480	1855-0935
Q17	1853-0567	1	TRANSISTOR PNP SI SOT-23 (TO-236AB)	00746	SST3906T116
Q18	1853-0567	1	TRANSISTOR PNP SI SOT-23 (TO-236AB)	00746	SST3906T116
Q19	1855-0935	1	TRANSISTOR GAAS FET N-CHAN D-MODE	28480	1855-0935
Q20	1855-0991	1	TRANSISTOR MOSFET N-CHAN E-MODE SOT-223	36633	MMFT960T1

Agilent Part Number E4401-60100
1.5 GHz RF (75 Ohm)

Reference Designator	Agilent Part Number	Qty	Description	Mgr Code	Mfr Part Number
Q21	1853-0567	1	TRANSISTOR PNP SI SOT-23 (TO-236AB)	00746	SST3906T116
Q22	1855-0935	1	TRANSISTOR GAAS FET N-CHAN D-MODE	28480	1855-0935
Q23	1855-0935	1	TRANSISTOR GAAS FET N-CHAN D-MODE	28480	1855-0935
Q24	1855-0935	1	TRANSISTOR GAAS FET N-CHAN D-MODE	28480	1855-0935
Q25	1855-0935	1	TRANSISTOR GAAS FET N-CHAN D-MODE	28480	1855-0935
Q26	1853-0567	1	TRANSISTOR PNP SI SOT-23 (TO-236AB)	00746	SST3906T116
Q27	1854-1270	1	TRANSISTOR NPN SI TO-261AA (SOT-223)	02910	PZT2222A
Q28	1854-1037	1	TRANSISTOR NPN SI TO-236AA PD350MW	00746	SST3904T116
Q29	1854-1037	1	TRANSISTOR NPN SI TO-236AA PD350MW	00746	SST3904T116
Q30	1854-1037	1	TRANSISTOR NPN SI TO-236AA PD350MW	00746	SST3904T116
Q31	1854-1037	1	TRANSISTOR NPN SI TO-236AA PD350MW	00746	SST3904T116
Q32	1854-1037	1	TRANSISTOR NPN SI TO-236AA PD350MW	00746	SST3904T116
Q33	1853-0567	1	TRANSISTOR PNP SI SOT-23 (TO-236AB)	00746	SST3906T116
Q34	1854-1037	1	TRANSISTOR NPN SI TO-236AA PD350MW	00746	SST3904T116
Q35	1853-0567	1	TRANSISTOR PNP SI SOT-23 (TO-236AB)	00746	SST3906T116
Q36	1854-1037	1	TRANSISTOR NPN SI TO-236AA PD350MW	00746	SST3904T116
Q37	1853-0567	1	TRANSISTOR PNP SI SOT-23 (TO-236AB)	00746	SST3906T116
Q38	1853-0567	1	TRANSISTOR PNP SI SOT-23 (TO-236AB)	00746	SST3906T116
Q39	1854-1037	1	TRANSISTOR NPN SI TO-236AA PD350MW	00746	SST3904T116
Q40	1853-0567	1	TRANSISTOR PNP SI SOT-23 (TO-236AB)	00746	SST3906T116
Q41	1854-1037	1	TRANSISTOR NPN SI TO-236AA PD350MW	00746	SST3904T116
Q42	1854-1037	1	TRANSISTOR NPN SI TO-236AA PD350MW	00746	SST3904T116
Q44	1854-1037	1	TRANSISTOR NPN SI TO-236AA PD350MW	00746	SST3904T116
Q45	1853-0580	1	TRANSISTOR PNP SI SOT-23 (TO-236AB)	00746	SST4403
Q46	1854-1188	1	TRANSISTOR NPN SI SOT-23 (TO-236AB)	11699	CMPT4401
Q47	1853-0567	1	TRANSISTOR PNP SI SOT-23 (TO-236AB)	00746	SST3906T116
Q48	1853-0567	1	TRANSISTOR PNP SI SOT-23 (TO-236AB)	00746	SST3906T116
Q49	1853-0567	1	TRANSISTOR PNP SI SOT-23 (TO-236AB)	00746	SST3906T116
Q50	1853-0567	1	TRANSISTOR PNP SI SOT-23 (TO-236AB)	00746	SST3906T116
Q51	1853-0568	1	TRANSISTOR PNP SI TO-236AA PD350MW	36633	MMBT5087LT1

 **Indicates factory-selected value*

Agilent Part Number E4401-60100
1.5 GHz RF (75 Ohm)

Reference Designator	Agilent Part Number	Qty	Description	Mgr Code	Mfr Part Number
Q52	1854-1270	1	TRANSISTOR NPN SI TO-261AA (SOT-223)	02910	PZT2222A
Q53	1854-1298	1	TRANSISTOR NPN SI PD500MW	01542	AT-41486
Q54	1853-0580	1	TRANSISTOR PNP SI SOT-23 (TO-236AB)	00746	SST4403
Q55	1853-0567	1	TRANSISTOR PNP SI SOT-23 (TO-236AB)	00746	SST3906T116
Q56	1854-1037	1	TRANSISTOR NPN SI TO-236AA PD350MW	00746	SST3904T116
Q57	1854-1083	1	TRANSISTOR NPN SI SOT-23 (TO-236AB)	11699	CMPT5179
Q58	1854-1270	1	TRANSISTOR NPN SI TO-261AA (SOT-223)	02910	PZT2222A
Q59	1854-1037	1	TRANSISTOR NPN SI TO-236AA PD350MW	00746	SST3904T116
Q60	1853-0580	1	TRANSISTOR PNP SI SOT-23 (TO-236AB)	00746	SST4403
Q61	1854-1037	1	TRANSISTOR NPN SI TO-236AA PD350MW	00746	SST3904T116
Q62	1853-0580	1	TRANSISTOR PNP SI SOT-23 (TO-236AB)	00746	SST4403
Q63	1854-1037	1	TRANSISTOR NPN SI TO-236AA PD350MW	00746	SST3904T116
Q64	1853-0580	1	TRANSISTOR PNP SI SOT-23 (TO-236AB)	00746	SST4403
Q65	1853-0567	1	TRANSISTOR PNP SI SOT-23 (TO-236AB)	00746	SST3906T116
Q66	1853-0567	1	TRANSISTOR PNP SI SOT-23 (TO-236AB)	00746	SST3906T116
Q67	1854-1270	1	TRANSISTOR NPN SI TO-261AA (SOT-223)	02910	PZT2222A
Q68	1853-0568	1	TRANSISTOR PNP SI TO-236AA PD350MW	36633	MMBT5087LT1
Q69	1854-1298	1	TRANSISTOR NPN SI PD500MW	01542	AT-41486
Q70	1853-0580	1	TRANSISTOR PNP SI SOT-23 (TO-236AB)	00746	SST4403
Q71	1854-1037	1	TRANSISTOR NPN SI TO-236AA PD350MW	00746	SST3904T116
Q72	1854-1083	1	TRANSISTOR NPN SI SOT-23 (TO-236AB)	11699	CMPT5179
Q73	1854-1270	1	TRANSISTOR NPN SI TO-261AA (SOT-223)	02910	PZT2222A
Q74	1854-1037	1	TRANSISTOR NPN SI TO-236AA PD350MW	00746	SST3904T116
Q75	1854-1270	1	TRANSISTOR NPN SI TO-261AA (SOT-223)	02910	PZT2222A
Q76	1854-1188	1	TRANSISTOR NPN SI SOT-23 (TO-236AB)	11699	CMPT4401
Q77	1855-0734	1	TRANSISTOR MOSFET 2N7002 N-CHAN E-MODE	02910	2N7002
Q78	1854-1037	1	TRANSISTOR NPN SI TO-236AA PD350MW	00746	SST3904T116
Q79	1854-1188	1	TRANSISTOR NPN SI SOT-23 (TO-236AB)	11699	CMPT4401
Q80	1854-1188	1	TRANSISTOR NPN SI SOT-23 (TO-236AB)	11699	CMPT4401

Agilent Part Number E4401-60100
1.5 GHz RF (75 Ohm)

Reference Designator	Agilent Part Number	Qty	Description	Mgr Code	Mfr Part Number
Q81	1854-1188	1	TRANSISTOR NPN SI SOT-23 (TO-236AB)	11699	CMPT4401
Q82	1854-1188	1	TRANSISTOR NPN SI SOT-23 (TO-236AB)	11699	CMPT4401
Q83	1854-1037	1	TRANSISTOR NPN SI TO-236AA PD350MW	00746	SST3904T116
Q84	1853-0567	1	TRANSISTOR PNP SI SOT-23 (TO-236AB)	00746	SST3906T116
R1	0699-3993	1	RESISTOR 100K +-1% .063W TKF TC0+-200	09891	RK73H1J1003F
R2	1810-1906	1	NET-RES 4 10.0K OHM	09891	CN2B4103F
R3	0699-1443	1	RESISTOR 147K +-1% .125W TKF TC0+-100	09891	RK73H2BT1473F
R4	1810-1907	1	NET-RES 4 100.0K OHM	09891	CN2B4104F
R5	0699-3993	1	RESISTOR 100K +-1% .063W TKF TC0+-200	09891	RK73H1J1003F
R6	0811-3587	1	RESISTOR 0 CWM	03123	104
R7	0811-3587	1	RESISTOR 0 CWM	03123	104
R8	0699-3941	1	RESISTOR 511 +-1% .063W TKF TC0+-200	00746	MCR03-F-5110
R9	0699-3960	1	RESISTOR 3.48K +-1% .063W TKF TC0+-200	09891	RK73H1J3481F
R10	0699-3970	1	RESISTOR 10K +-1% .063W TKF TC0+-200	09891	RK73H1J1002F
R11	0699-3941	1	RESISTOR 511 +-1% .063W TKF TC0+-200	00746	MCR03-F-5110
R12	0699-3928	1	RESISTOR 147 +-1% .063W TKF TC0+-200	00746	MCR03-F-1470
R13	0699-1453	1	RESISTOR 464K +-1% .125W TKF TC0+-100	00746	MCR18-F-4643
R14	0699-1453	1	RESISTOR 464K +-1% .125W TKF TC0+-100	00746	MCR18-F-4643
R15	0699-3938	1	RESISTOR 383 +-1% .063W TKF TC0+-200	00746	MCR03-F-3830
R16	0699-1432	1	RESISTOR 511 +-1% .125W TKF TC0+-100	00746	MCR18-F-5110
R17	0699-1432	1	RESISTOR 511 +-1% .125W TKF TC0+-100	00746	MCR18-F-5110
R18	0699-3970	1	RESISTOR 10K +-1% .063W TKF TC0+-200	09891	RK73H1J1002F
R19	0699-3955	1	RESISTOR 2.15K +-1% .063W TKF TC0+-200	09891	RK73H1J2151F
R20	0699-3970	1	RESISTOR 10K +-1% .063W TKF TC0+-200	09891	RK73H1J1002F
R21	0699-3964	1	RESISTOR 5.11K +-1% .063W TKF TC0+-200	09891	RK73H1J5111F
R22	0699-1360	1	RESISTOR 46.4 +-1% .125W TKF TC0+-100	05524	CRCW120646R4F
R23	0699-1360	1	RESISTOR 46.4 +-1% .125W TKF TC0+-100	05524	CRCW120646R4F
R24	0699-1350	1	RESISTOR 17.8 +-1% .125W TKF TC0+-100	00746	MCR18-F-17R8
R25	0699-1360	1	RESISTOR 46.4 +-1% .125W TKF TC0+-100	05524	CRCW120646R4F
R26	0699-1360	1	RESISTOR 46.4 +-1% .125W TKF TC0+-100	05524	CRCW120646R4F

 **Indicates factory-selected value*

Agilent Part Number E4401-60100
1.5 GHz RF (75 Ohm)

Reference Designator	Agilent Part Number	Qty	Description	Mgr Code	Mfr Part Number
R27	0699-3910	1	RESISTOR 23.7 +-1% .063W TKF TC0+-200	09891	RK73H1J23R7F
R28	0699-1348	1	RESISTOR 14.7 +-1% .125W TKF TC0+-100	05524	CRCW120614R7F
R29	0699-1344	1	RESISTOR 10 +-1% .125W TKF TC0+-100	09891	RK73H2BT10R0F
R30	0699-1423	1	RESISTOR 215 +-1% .125W TKF TC0+-100	05524	CRCW12062150F
R31	0699-1432	1	RESISTOR 511 +-1% .125W TKF TC0+-100	00746	MCR18-F-5110
R32	0699-1366	1	RESISTOR 82.5 +-1% .125W TKF TC0+-100	05524	CRCW120682R5F
R33	0699-1419	1	RESISTOR 147 +-1% .125W TKF TC0+-100	05524	CRCW12061470F
R34	0699-1419	1	RESISTOR 147 +-1% .125W TKF TC0+-100	05524	CRCW12061470F
R35	0699-1367	1	RESISTOR 90.9 +-1% .125W TKF TC0+-100	05524	CRCW120690R9F
R36	0699-1363	1	RESISTOR 61.9 +-1% .125W TKF TC0+-100	05524	CRCW120661R9F
R37	0699-1366	1	RESISTOR 82.5 +-1% .125W TKF TC0+-100	05524	CRCW120682R5F
R38	0699-1415	1	RESISTOR 100 +-1% .125W TKF TC0+-100	05524	CRCW12061000F
R39	0699-1421	1	RESISTOR 178 +-1% .125W TKF TC0+-100	09891	RK73H2BT1780F
R40	0699-1356	1	RESISTOR 31.6 +-1% .25W TKF TC0+-100	09891	RK73H2BT31R6F
R41	0699-1421	1	RESISTOR 178 +-1% .125W TKF TC0+-100	09891	RK73H2BT1780F
R42	0699-3927	1	RESISTOR 133 +-1% .063W TKF TC0+-200	00746	MCR03-F-1330
R43	0699-3921	1	RESISTOR 75 +-1% .063W TKF TC0+-200	00746	MCR03-F-75R0
R44	0699-3921	1	RESISTOR 75 +-1% .063W TKF TC0+-200	00746	MCR03-F-75R0
R45	0699-3927	1	RESISTOR 133 +-1% .063W TKF TC0+-200	00746	MCR03-F-1330
R46	0699-3921	1	RESISTOR 75 +-1% .063W TKF TC0+-200	00746	MCR03-F-75R0
R47	0699-3921	1	RESISTOR 75 +-1% .063W TKF TC0+-200	00746	MCR03-F-75R0
R48	0699-1350	1	RESISTOR 17.8 +-1% .125W TKF TC0+-100	00746	MCR18-F-17R8
R49	0699-3941	1	RESISTOR 511 +-1% .063W TKF TC0+-200	00746	MCR03-F-5110
R50	0699-3960	1	RESISTOR 3.48K +-1% .063W TKF TC0+-200	09891	RK73H1J3481F
R51	0699-2846	1	RESISTOR 5K +-0.1% .125W TF TC0+-25	02499	W1206R035001BT
R52	0699-2846	1	RESISTOR 5K +-0.1% .125W TF TC0+-25	02499	W1206R035001BT
R53	0699-2846	1	RESISTOR 5K +-0.1% .125W TF TC0+-25	02499	W1206R035001BT
R54	0699-2846	1	RESISTOR 5K +-0.1% .125W TF TC0+-25	02499	W1206R035001BT
R55	0699-3952	1	RESISTOR 1.62K +-1% .063W TKF TC0+-200	09891	RK73H1J1621F
R56	0699-3924	1	RESISTOR 100 +-1% .063W TKF TC0+-200	00746	MCR03-F-1000

Agilent Part Number E4401-60100
1.5 GHz RF (75 Ohm)

Reference Designator	Agilent Part Number	Qty	Description	Mgr Code	Mfr Part Number
R57	0699-3965	1	RESISTOR 6.19K +-1% .063W TKF TC0+-200	09891	RK73H1J6191F
R58	0699-3948	1	RESISTOR 1.1K +-1% .063W TKF TC0+-200	00746	MCR03-F-1101
R59	0699-3966	1	RESISTOR 6.81K +-1% .063W TKF TC0+-200	09891	RK73H1J6811F
R60	0699-3964	1	RESISTOR 5.11K +-1% .063W TKF TC0+-200	09891	RK73H1J5111F
R61	0699-3964	1	RESISTOR 5.11K +-1% .063W TKF TC0+-200	09891	RK73H1J5111F
R62	0699-3964	1	RESISTOR 5.11K +-1% .063W TKF TC0+-200	09891	RK73H1J5111F
R63	0699-3924	1	RESISTOR 100 +-1% .063W TKF TC0+-200	00746	MCR03-F-1000
R64	0699-3924	1	RESISTOR 100 +-1% .063W TKF TC0+-200	00746	MCR03-F-1000
R65	0699-3924	1	RESISTOR 100 +-1% .063W TKF TC0+-200	00746	MCR03-F-1000
R66	0699-3918	1	RESISTOR 51.1 +-1% .063W TKF TC0+-200	00746	MCR03-F-51R1
R67	0699-3918	1	RESISTOR 51.1 +-1% .063W TKF TC0+-200	00746	MCR03-F-51R1
R68	0699-3918	1	RESISTOR 51.1 +-1% .063W TKF TC0+-200	00746	MCR03-F-51R1
R69	0699-3931	1	RESISTOR 196 +-1% .063W TKF TC0+-200	09891	RK73H1J1960F
R70	0699-3931	1	RESISTOR 196 +-1% .063W TKF TC0+-200	09891	RK73H1J1960F
R71	0699-1364	1	RESISTOR 68.1 +-1% .125W TKF TC0+-100	05524	CRCW120668R1F
R72	0699-3931	1	RESISTOR 196 +-1% .063W TKF TC0+-200	09891	RK73H1J1960F
R73	0699-3931	1	RESISTOR 196 +-1% .063W TKF TC0+-200	09891	RK73H1J1960F
R74	0699-3919	1	RESISTOR 61.9 +-1% .063W TKF TC0+-200	05524	CRCW060361R9F
R75	0699-3919	1	RESISTOR 61.9 +-1% .063W TKF TC0+-200	05524	CRCW060361R9F
R76	1810-1360	1	NET-RES 8 10.0K OHM 16-PIN	05524	SOMC-1603-103G
R77	0699-3919	1	RESISTOR 61.9 +-1% .063W TKF TC0+-200	05524	CRCW060361R9F
R78	0699-3919	1	RESISTOR 61.9 +-1% .063W TKF TC0+-200	05524	CRCW060361R9F
R79	0699-3919	1	RESISTOR 61.9 +-1% .063W TKF TC0+-200	05524	CRCW060361R9F
R80	0699-3919	1	RESISTOR 61.9 +-1% .063W TKF TC0+-200	05524	CRCW060361R9F
R81	0699-3963	1	RESISTOR 4.64K +-1% .063W TKF TC0+-200	09891	RK73H1J4641F
R82	0699-3941	1	RESISTOR 511 +-1% .063W TKF TC0+-200	00746	MCR03-F-5110
R83	0699-3924	1	RESISTOR 100 +-1% .063W TKF TC0+-200	00746	MCR03-F-1000
R84	0699-3924	1	RESISTOR 100 +-1% .063W TKF TC0+-200	00746	MCR03-F-1000
R85	0699-3924	1	RESISTOR 100 +-1% .063W TKF TC0+-200	00746	MCR03-F-1000
R86	0699-3924	1	RESISTOR 100 +-1% .063W TKF TC0+-200	00746	MCR03-F-1000

 **Indicates factory-selected value*

Agilent Part Number E4401-60100
1.5 GHz RF (75 Ohm)

Reference Designator	Agilent Part Number	Qty	Description	Mgr Code	Mfr Part Number
R87	0699-3941	1	RESISTOR 511 +-1% .063W TKF TC0+-200	00746	MCR03-F-5110
R88	0699-1362	1	RESISTOR 56.2 +-1% .125W TKF TC0+-100	00746	MCR18-F-56R2
R89	0699-1362	1	RESISTOR 56.2 +-1% .125W TKF TC0+-100	00746	MCR18-F-56R2
R90	0699-2064	1	RESISTOR 6.8 +-5% .125W TKF TC0+-500	00746	MCR18-J-6R8
R91	0699-2064	1	RESISTOR 6.8 +-5% .125W TKF TC0+-500	00746	MCR18-J-6R8
R92	0699-3941	1	RESISTOR 511 +-1% .063W TKF TC0+-200	00746	MCR03-F-5110
R93	0699-3918	1	RESISTOR 51.1 +-1% .063W TKF TC0+-200	00746	MCR03-F-51R1
R94	0699-3941	1	RESISTOR 511 +-1% .063W TKF TC0+-200	00746	MCR03-F-5110
R95	0699-3951	1	RESISTOR 1.47K +-1% .063W TKF TC0+-200	00746	MCR03-F-1471
R96	0699-3950	1	RESISTOR 1.33K +-1% .063W TKF TC0+-200	09891	RK73H1J1331F
R97	1810-1231	1	NET-RES 8 100.0 OHM 16-PIN	05524	SOMC16-03-101G
R98	0699-3951	1	RESISTOR 1.47K +-1% .063W TKF TC0+-200	00746	MCR03-F-1471
R99	1810-1580	1	NET-RES 4 10.0K OHM 8-PIN	00746	MNR34K5ABJ103
R100	0699-3924	1	RESISTOR 100 +-1% .063W TKF TC0+-200	00746	MCR03-F-1000
R101	0699-3924	1	RESISTOR 100 +-1% .063W TKF TC0+-200	00746	MCR03-F-1000
R102	0699-3924	1	RESISTOR 100 +-1% .063W TKF TC0+-200	00746	MCR03-F-1000
R103	0699-3951	1	RESISTOR 1.47K +-1% .063W TKF TC0+-200	00746	MCR03-F-1471
R104	0699-3950	1	RESISTOR 1.33K +-1% .063W TKF TC0+-200	09891	RK73H1J1331F
R105	0699-3951	1	RESISTOR 1.47K +-1% .063W TKF TC0+-200	00746	MCR03-F-1471
R106	0699-3924	1	RESISTOR 100 +-1% .063W TKF TC0+-200	00746	MCR03-F-1000
R107	0699-3924	1	RESISTOR 100 +-1% .063W TKF TC0+-200	00746	MCR03-F-1000
R108	0699-3924	1	RESISTOR 100 +-1% .063W TKF TC0+-200	00746	MCR03-F-1000
R109	0699-3951	1	RESISTOR 1.47K +-1% .063W TKF TC0+-200	00746	MCR03-F-1471
R110	0699-3951	1	RESISTOR 1.47K +-1% .063W TKF TC0+-200	00746	MCR03-F-1471
R111	0699-3950	1	RESISTOR 1.33K +-1% .063W TKF TC0+-200	09891	RK73H1J1331F
R112	1810-1231	1	NET-RES 8 100.0 OHM 16-PIN	05524	SOMC16-03-101G
R113	0699-3924	1	RESISTOR 100 +-1% .063W TKF TC0+-200	00746	MCR03-F-1000
R114	0699-3924	1	RESISTOR 100 +-1% .063W TKF TC0+-200	00746	MCR03-F-1000
R115	0699-3932	1	RESISTOR 215 +-1% .063W TKF TC0+-200	00746	MCR03-F-2150
R116	0699-3932	1	RESISTOR 215 +-1% .063W TKF TC0+-200	00746	MCR03-F-2150

Agilent Part Number E4401-60100
1.5 GHz RF (75 Ohm)

Reference Designator	Agilent Part Number	Qty	Description	Mgr Code	Mfr Part Number
R117	0699-3932	1	RESISTOR 215 +-1% .063W TKF TC0+-200	00746	MCR03-F-2150
R118	0699-3951	1	RESISTOR 1.47K +-1% .063W TKF TC0+-200	00746	MCR03-F-1471
R119	0699-3950	1	RESISTOR 1.33K +-1% .063W TKF TC0+-200	09891	RK73H1J1331F
R120	0699-3951	1	RESISTOR 1.47K +-1% .063W TKF TC0+-200	00746	MCR03-F-1471
R121	0699-3924	1	RESISTOR 100 +-1% .063W TKF TC0+-200	00746	MCR03-F-1000
R122	0699-3924	1	RESISTOR 100 +-1% .063W TKF TC0+-200	00746	MCR03-F-1000
R123	0699-3924	1	RESISTOR 100 +-1% .063W TKF TC0+-200	00746	MCR03-F-1000
R124	0699-3924	1	RESISTOR 100 +-1% .063W TKF TC0+-200	00746	MCR03-F-1000
R125	0699-3924	1	RESISTOR 100 +-1% .063W TKF TC0+-200	00746	MCR03-F-1000
R126	0699-3924	1	RESISTOR 100 +-1% .063W TKF TC0+-200	00746	MCR03-F-1000
R127	0699-3951	1	RESISTOR 1.47K +-1% .063W TKF TC0+-200	00746	MCR03-F-1471
R128	0699-3951	1	RESISTOR 1.47K +-1% .063W TKF TC0+-200	00746	MCR03-F-1471
R129	0699-3950	1	RESISTOR 1.33K +-1% .063W TKF TC0+-200	09891	RK73H1J1331F
R130	0699-3957	1	RESISTOR 2.61K +-1% .063W TKF TC0+-200	09891	RK73H1J2611F
R131	0699-3955	1	RESISTOR 2.15K +-1% .063W TKF TC0+-200	09891	RK73H1J2151F
R132	0699-3951	1	RESISTOR 1.47K +-1% .063W TKF TC0+-200	00746	MCR03-F-1471
R133	0699-3970	1	RESISTOR 10K +-1% .063W TKF TC0+-200	09891	RK73H1J1002F
R134	0699-1348	1	RESISTOR 14.7 +-1% .125W TKF TC0+-100	05524	CRCW120614R7F
R135	0699-1348	1	RESISTOR 14.7 +-1% .125W TKF TC0+-100	05524	CRCW120614R7F
R136	0699-3918	1	RESISTOR 51.1 +-1% .063W TKF TC0+-200	00746	MCR03-F-51R1
R137	1810-1230	1	NET-RES 8 4.7K OHM 16-PIN	05524	SOMC-16-03-472G
R140	0699-3937	1	RESISTOR 348 +-1% .063W TKF TC0+-200	00746	MCR03-F-3480
R141	1810-1360	1	NET-RES 8 10.0K OHM 16-PIN	05524	SOMC-1603-103G
R142	1810-1231	1	NET-RES 8 100.0 OHM 16-PIN	05524	SOMC16-03-101G
R143	0699-1422	1	RESISTOR 196 +-1% .125W TKF TC0+-100	09891	RK73H2BT1960F
R144	0699-3957	1	RESISTOR 2.61K +-1% .063W TKF TC0+-200	09891	RK73H1J2611F
R145	0699-3955	1	RESISTOR 2.15K +-1% .063W TKF TC0+-200	09891	RK73H1J2151F
R146	0699-3951	1	RESISTOR 1.47K +-1% .063W TKF TC0+-200	00746	MCR03-F-1471
R147	0699-3970	1	RESISTOR 10K +-1% .063W TKF TC0+-200	09891	RK73H1J1002F
R148	0699-3918	1	RESISTOR 51.1 +-1% .063W TKF TC0+-200	00746	MCR03-F-51R1

 **Indicates factory-selected value*

Agilent Part Number E4401-60100
1.5 GHz RF (75 Ohm)

Reference Designator	Agilent Part Number	Qty	Description	Mgr Code	Mfr Part Number
R149	0699-1348	1	RESISTOR 14.7 +-1% .125W TKF TC0+-100	05524	CRCW120614R7F
R150	0699-1348	1	RESISTOR 14.7 +-1% .125W TKF TC0+-100	05524	CRCW120614R7F
R151	0699-3907	1	RESISTOR 17.8 +-1% .063W TKF TC0+-200	09891	RK73H1J17R8F
R152	0699-3935	1	RESISTOR 287 +-1% .063W TKF TC0+-200	00746	MCR03-F-2870
R153	0699-3935	1	RESISTOR 287 +-1% .063W TKF TC0+-200	00746	MCR03-F-2870
R154	1810-1231	1	NET-RES 8 100.0 OHM 16-PIN	05524	SOMC16-03-101G
R155	1810-1360	1	NET-RES 8 10.0K OHM 16-PIN	05524	SOMC-1603-103G
R156	0699-1363	1	RESISTOR 61.9 +-1% .125W TKF TC0+-100	05524	CRCW120661R9F
R157	0699-3964	1	RESISTOR 5.11K +-1% .063W TKF TC0+-200	09891	RK73H1J5111F
R158	0699-3918	1	RESISTOR 51.1 +-1% .063W TKF TC0+-200	00746	MCR03-F-51R1
R159	0699-3955	1	RESISTOR 2.15K +-1% .063W TKF TC0+-200	09891	RK73H1J2151F
R160	0699-3948	1	RESISTOR 1.1K +-1% .063W TKF TC0+-200	00746	MCR03-F-1101
R161	0699-3955	1	RESISTOR 2.15K +-1% .063W TKF TC0+-200	09891	RK73H1J2151F
R162	0699-3964	1	RESISTOR 5.11K +-1% .063W TKF TC0+-200	09891	RK73H1J5111F
R163	0699-3918	1	RESISTOR 51.1 +-1% .063W TKF TC0+-200	00746	MCR03-F-51R1
R164	0699-1363	1	RESISTOR 61.9 +-1% .125W TKF TC0+-100	05524	CRCW120661R9F
R165	0699-1348	1	RESISTOR 14.7 +-1% .125W TKF TC0+-100	05524	CRCW120614R7F
R166	0699-1348	1	RESISTOR 14.7 +-1% .125W TKF TC0+-100	05524	CRCW120614R7F
R167	0699-1348	1	RESISTOR 14.7 +-1% .125W TKF TC0+-100	05524	CRCW120614R7F
R168	0699-3951	1	RESISTOR 1.47K +-1% .063W TKF TC0+-200	00746	MCR03-F-1471
R169	0699-3918	1	RESISTOR 51.1 +-1% .063W TKF TC0+-200	00746	MCR03-F-51R1
R170	0699-3913	1	RESISTOR 31.6 +-1% .063W TKF TC0+-200	09891	RK73H1J31R6F
R171	0699-3918	1	RESISTOR 51.1 +-1% .063W TKF TC0+-200	00746	MCR03-F-51R1
R172	0699-3924	1	RESISTOR 100 +-1% .063W TKF TC0+-200	00746	MCR03-F-1000
R173	0699-3924	1	RESISTOR 100 +-1% .063W TKF TC0+-200	00746	MCR03-F-1000
R174	0699-3947	1	RESISTOR 1K +-1% .063W TKF TC0+-200	00746	MCR03-F-1001
R175	1810-1578	1	NET-RES 4 1.0K OHM 8-PIN	00746	MNR34K5ABJ102
R179	0699-3947	1	RESISTOR 1K +-1% .063W TKF TC0+-200	00746	MCR03-F-1001
R180	0699-3947	1	RESISTOR 1K +-1% .063W TKF TC0+-200	00746	MCR03-F-1001
R181	0698-3624	1	RESISTOR 150 +-5% 2W MO TC0+-200	02499	GS-31500

Agilent Part Number E4401-60100
1.5 GHz RF (75 Ohm)

Reference Designator	Agilent Part Number	Qty	Description	Mgr Code	Mfr Part Number
R182	0699-3970	1	RESISTOR 10K +-1% .063W TKF TC0+-200	09891	RK73H1J1002F
R183	0699-3954	1	RESISTOR 1.96K +-1% .063W TKF TC0+-200	09891	RK73H1J1961F
R184	0699-3970	1	RESISTOR 10K +-1% .063W TKF TC0+-200	09891	RK73H1J1002F
R185	0699-4558	1	RESISTOR 80K +-0.1% .125W TF TC0+-25	05524	TNPW1206803BT-9
R186	0699-4558	1	RESISTOR 80K +-0.1% .125W TF TC0+-25	05524	TNPW1206803BT-9
R187	0699-4558	1	RESISTOR 80K +-0.1% .125W TF TC0+-25	05524	TNPW1206803BT-9
R188	0699-4558	1	RESISTOR 80K +-0.1% .125W TF TC0+-25	05524	TNPW1206803BT-9
R189	0699-3937	1	RESISTOR 348 +-1% .063W TKF TC0+-200	00746	MCR03-F-3480
R190	0699-3937	1	RESISTOR 348 +-1% .063W TKF TC0+-200	00746	MCR03-F-3480
R191	0699-3937	1	RESISTOR 348 +-1% .063W TKF TC0+-200	00746	MCR03-F-3480
R192	0699-3937	1	RESISTOR 348 +-1% .063W TKF TC0+-200	00746	MCR03-F-3480
R193	0699-3941	1	RESISTOR 511 +-1% .063W TKF TC0+-200	00746	MCR03-F-5110
R195	0699-3970	1	RESISTOR 10K +-1% .063W TKF TC0+-200	09891	RK73H1J1002F
R196	0699-3964	1	RESISTOR 5.11K +-1% .063W TKF TC0+-200	09891	RK73H1J5111F
R197	0699-3918	1	RESISTOR 51.1 +-1% .063W TKF TC0+-200	00746	MCR03-F-51R1
R198	0699-3918	1	RESISTOR 51.1 +-1% .063W TKF TC0+-200	00746	MCR03-F-51R1
R199	0699-3961	1	RESISTOR 3.83K +-1% .063W TKF TC0+-200	09891	RK73H1J3831F
R200	0699-3970	1	RESISTOR 10K +-1% .063W TKF TC0+-200	09891	RK73H1J1002F
R201	0699-3970	1	RESISTOR 10K +-1% .063W TKF TC0+-200	09891	RK73H1J1002F
R202	0699-3939	1	RESISTOR 422 +-1% .063W TKF TC0+-200	09891	RK73H1J4220F
R203	0699-3970	1	RESISTOR 10K +-1% .063W TKF TC0+-200	09891	RK73H1J1002F
R204	0699-3918	1	RESISTOR 51.1 +-1% .063W TKF TC0+-200	00746	MCR03-F-51R1
R205	0699-3964	1	RESISTOR 5.11K +-1% .063W TKF TC0+-200	09891	RK73H1J5111F
R206	0699-3938	1	RESISTOR 383 +-1% .063W TKF TC0+-200	00746	MCR03-F-3830
R207	0699-3970	1	RESISTOR 10K +-1% .063W TKF TC0+-200	09891	RK73H1J1002F
R208	0699-3970	1	RESISTOR 10K +-1% .063W TKF TC0+-200	09891	RK73H1J1002F
R209	0699-3970	1	RESISTOR 10K +-1% .063W TKF TC0+-200	09891	RK73H1J1002F

 **Indicates factory-selected value*

Agilent Part Number E4401-60100
1.5 GHz RF (75 Ohm)

Reference Designator	Agilent Part Number	Qty	Description	Mgr Code	Mfr Part Number
R210	0699-3918	1	RESISTOR 51.1 +-1% .063W TKF TC0+-200	00746	MCR03-F-51R1
R211	0699-1436	1	RESISTOR 750 +-1% .125W TKF TC0+-100	09891	RK73H2BT7500F
R212	0699-3940	1	RESISTOR 464 +-1% .063W TKF TC0+-200	09891	RK73H1J4640F
R213	0699-3918	1	RESISTOR 51.1 +-1% .063W TKF TC0+-200	00746	MCR03-F-51R1
R214	0699-3941	1	RESISTOR 511 +-1% .063W TKF TC0+-200	00746	MCR03-F-5110
R215	0699-3964	1	RESISTOR 5.11K +-1% .063W TKF TC0+-200	09891	RK73H1J5111F
R216	0699-3910	1	RESISTOR 23.7 +-1% .063W TKF TC0+-200	09891	RK73H1J23R7F
R217	0699-3955	1	RESISTOR 2.15K +-1% .063W TKF TC0+-200	09891	RK73H1J2151F
R218	0699-3947	1	RESISTOR 1K +-1% .063W TKF TC0+-200	00746	MCR03-F-1001
R219	0699-3901	1	RESISTOR 10 +-1% .063W TKF TC0+-200	00746	MCR03-F-10R0
R220	0699-3938	1	RESISTOR 383 +-1% .063W TKF TC0+-200	00746	MCR03-F-3830
R221	0699-3934	1	RESISTOR 261 +-1% .063W TKF TC0+-200	09891	RK73H1J2610F
R222	0699-3938	1	RESISTOR 383 +-1% .063W TKF TC0+-200	00746	MCR03-F-3830
R223	0699-3938	1	RESISTOR 383 +-1% .063W TKF TC0+-200	00746	MCR03-F-3830
R224	0699-3947	1	RESISTOR 1K +-1% .063W TKF TC0+-200	00746	MCR03-F-1001
R225	0699-3960	1	RESISTOR 3.48K +-1% .063W TKF TC0+-200	09891	RK73H1J3481F
R226	0699-3918	1	RESISTOR 51.1 +-1% .063W TKF TC0+-200	00746	MCR03-F-51R1
R227	0699-3921	1	RESISTOR 75 +-1% .063W TKF TC0+-200	00746	MCR03-F-75R0
R228	0699-3924	1	RESISTOR 100 +-1% .063W TKF TC0+-200	00746	MCR03-F-1000
R229	0699-3918	1	RESISTOR 51.1 +-1% .063W TKF TC0+-200	00746	MCR03-F-51R1
R230	0699-3921	1	RESISTOR 75 +-1% .063W TKF TC0+-200	00746	MCR03-F-75R0
R231	0699-3928	1	RESISTOR 147 +-1% .063W TKF TC0+-200	00746	MCR03-F-1470
R232	0699-3950	1	RESISTOR 1.33K +-1% .063W TKF TC0+-200	09891	RK73H1J1331F
R233	0699-3931	1	RESISTOR 196 +-1% .063W TKF TC0+-200	09891	RK73H1J1960F
R234	0699-3975	1	RESISTOR 16.2K +-1% .063W TKF TC0+-200	09891	RK73H1J1622F
R235	0699-3961	1	RESISTOR 3.83K +-1% .063W TKF TC0+-200	09891	RK73H1J3831F
R236	0699-3970	1	RESISTOR 10K +-1% .063W TKF TC0+-200	09891	RK73H1J1002F
R237	0699-3950	1	RESISTOR 1.33K +-1% .063W TKF TC0+-200	09891	RK73H1J1331F
R238	0699-3928	1	RESISTOR 147 +-1% .063W TKF TC0+-200	00746	MCR03-F-1470
R239	0699-3931	1	RESISTOR 196 +-1% .063W TKF TC0+-200	09891	RK73H1J1960F

**Indicates factory-selected value*

Agilent Part Number E4401-60100
1.5 GHz RF (75 Ohm)

Reference Designator	Agilent Part Number	Qty	Description	Mgr Code	Mfr Part Number
R240	0699-3975	1	RESISTOR 16.2K +-1% .063W TKF TC0+-200	09891	RK73H1J1622F
R241	0699-3961	1	RESISTOR 3.83K +-1% .063W TKF TC0+-200	09891	RK73H1J3831F
R242	0699-3970	1	RESISTOR 10K +-1% .063W TKF TC0+-200	09891	RK73H1J1002F
R243	0699-3924	1	RESISTOR 100 +-1% .063W TKF TC0+-200	00746	MCR03-F-1000
R244	0699-3944	1	RESISTOR 750 +-1% .063W TKF TC0+-200	09891	RK73H1J7500F
R245	0699-3941	1	RESISTOR 511 +-1% .063W TKF TC0+-200	00746	MCR03-F-5110
R246	0699-3918	1	RESISTOR 51.1 +-1% .063W TKF TC0+-200	00746	MCR03-F-51R1
R247	0699-3941	1	RESISTOR 511 +-1% .063W TKF TC0+-200	00746	MCR03-F-5110
R248	0699-3918	1	RESISTOR 51.1 +-1% .063W TKF TC0+-200	00746	MCR03-F-51R1
R249	0699-3944	1	RESISTOR 750 +-1% .063W TKF TC0+-200	09891	RK73H1J7500F
R250	0699-3918	1	RESISTOR 51.1 +-1% .063W TKF TC0+-200	00746	MCR03-F-51R1
R251	0699-3941	1	RESISTOR 511 +-1% .063W TKF TC0+-200	00746	MCR03-F-5110
R252	0699-3964	1	RESISTOR 5.11K +-1% .063W TKF TC0+-200	09891	RK73H1J5111F
R253	0699-3910	1	RESISTOR 23.7 +-1% .063W TKF TC0+-200	09891	RK73H1J23R7F
R254	0699-3969	1	RESISTOR 9.09K +-1% .063W TKF TC0+-200	09891	RK73H1J9091F
R255	0699-3918	1	RESISTOR 51.1 +-1% .063W TKF TC0+-200	00746	MCR03-F-51R1
R256	0699-3967	1	RESISTOR 7.5K +-1% .063W TKF TC0+-200	09891	RK73H1J7501F
R257	0699-3918	1	RESISTOR 51.1 +-1% .063W TKF TC0+-200	00746	MCR03-F-51R1
R258	0699-3941	1	RESISTOR 511 +-1% .063W TKF TC0+-200	00746	MCR03-F-5110
R259	0699-3964	1	RESISTOR 5.11K +-1% .063W TKF TC0+-200	09891	RK73H1J5111F
R260	0699-3910	1	RESISTOR 23.7 +-1% .063W TKF TC0+-200	09891	RK73H1J23R7F
R261	0699-3969	1	RESISTOR 9.09K +-1% .063W TKF TC0+-200	09891	RK73H1J9091F
R262	0699-3941	1	RESISTOR 511 +-1% .063W TKF TC0+-200	00746	MCR03-F-5110
R263	0699-3954	1	RESISTOR 1.96K +-1% .063W TKF TC0+-200	09891	RK73H1J1961F
R264	0699-3964	1	RESISTOR 5.11K +-1% .063W TKF TC0+-200	09891	RK73H1J5111F
R265	0699-3970	1	RESISTOR 10K +-1% .063W TKF TC0+-200	09891	RK73H1J1002F
R266	0699-3947	1	RESISTOR 1K +-1% .063W TKF TC0+-200	00746	MCR03-F-1001
R267	0699-3970	1	RESISTOR 10K +-1% .063W TKF TC0+-200	09891	RK73H1J1002F
R268	0699-3955	1	RESISTOR 2.15K +-1% .063W TKF TC0+-200	09891	RK73H1J2151F
R269	0699-3970	1	RESISTOR 10K +-1% .063W TKF TC0+-200	09891	RK73H1J1002F

 **Indicates factory-selected value*

Agilent Part Number E4401-60100
1.5 GHz RF (75 Ohm)

Reference Designator	Agilent Part Number	Qty	Description	Mgr Code	Mfr Part Number
R270	0699-1415	1	RESISTOR 100 +-1% .125W TKF TC0+-100	05524	CRCW12061000F
R271	0699-3918	1	RESISTOR 51.1 +-1% .063W TKF TC0+-200	00746	MCR03-F-51R1
R272	0699-3970	1	RESISTOR 10K +-1% .063W TKF TC0+-200	09891	RK73H1J1002F
R273	0699-3970	1	RESISTOR 10K +-1% .063W TKF TC0+-200	09891	RK73H1J1002F
R274	0699-3960	1	RESISTOR 3.48K +-1% .063W TKF TC0+-200	09891	RK73H1J3481F
R275	0699-3955	1	RESISTOR 2.15K +-1% .063W TKF TC0+-200	09891	RK73H1J2151F
R277	0699-3901	1	RESISTOR 10 +-1% .063W TKF TC0+-200	00746	MCR03-F-10R0
R278	0699-3964	1	RESISTOR 5.11K +-1% .063W TKF TC0+-200	09891	RK73H1J5111F
R279	0699-3948	1	RESISTOR 1.1K +-1% .063W TKF TC0+-200	00746	MCR03-F-1101
R280	0699-3942	1	RESISTOR 619 +-1% .063W TKF TC0+-200	00746	MCR03-F-6190
R282	0699-3942	1	RESISTOR 619 +-1% .063W TKF TC0+-200	00746	MCR03-F-6190
R283	0699-3947	1	RESISTOR 1K +-1% .063W TKF TC0+-200	00746	MCR03-F-1001
R284	0699-3956	1	RESISTOR 2.37K +-1% .063W TKF TC0+-200	09891	RK73H1J2371F
R285	0699-3942	1	RESISTOR 619 +-1% .063W TKF TC0+-200	00746	MCR03-F-6190
R287	0699-3942	1	RESISTOR 619 +-1% .063W TKF TC0+-200	00746	MCR03-F-6190
R288	0699-3956	1	RESISTOR 2.37K +-1% .063W TKF TC0+-200	09891	RK73H1J2371F
R290	0699-3951	1	RESISTOR 1.47K +-1% .063W TKF TC0+-200	00746	MCR03-F-1471
R291	0699-3993	1	RESISTOR 100K +-1% .063W TKF TC0+-200	09891	RK73H1J1003F
R292	0699-3976	1	RESISTOR 17.8K +-1% .063W TKF TC0+-200	09891	RK73H1J1782F
R293	0699-3945	1	RESISTOR 825 +-1% .063W TKF TC0+-200	00746	MCR03-F-8250
R294	0699-3947	1	RESISTOR 1K +-1% .063W TKF TC0+-200	00746	MCR03-F-1001
R295	0699-3939	1	RESISTOR 422 +-1% .063W TKF TC0+-200	09891	RK73H1J4220F
R297	0699-3932	1	RESISTOR 215 +-1% .063W TKF TC0+-200	00746	MCR03-F-2150
R298	0699-3918	1	RESISTOR 51.1 +-1% .063W TKF TC0+-200	00746	MCR03-F-51R1
R299	0699-3918	1	RESISTOR 51.1 +-1% .063W TKF TC0+-200	00746	MCR03-F-51R1
R300	0699-3993	1	RESISTOR 100K +-1% .063W TKF TC0+-200	09891	RK73H1J1003F
R301	0699-3963	1	RESISTOR 4.64K +-1% .063W TKF TC0+-200	09891	RK73H1J4641F
R302	0699-3981	1	RESISTOR 28.7K +-1% .063W TKF TC0+-200	09891	RK73H1J2872F
R303	0699-3970	1	RESISTOR 10K +-1% .063W TKF TC0+-200	09891	RK73H1J1002F
R304	0699-3970	1	RESISTOR 10K +-1% .063W TKF TC0+-200	09891	RK73H1J1002F

Agilent Part Number E4401-60100
1.5 GHz RF (75 Ohm)

Reference Designator	Agilent Part Number	Qty	Description	Mgr Code	Mfr Part Number
R305	0699-3976	1	RESISTOR 17.8K +-1% .063W TKF TC0+-200	09891	RK73H1J1782F
R306	0699-3951	1	RESISTOR 1.47K +-1% .063W TKF TC0+-200	00746	MCR03-F-1471
R307	0699-3951	1	RESISTOR 1.47K +-1% .063W TKF TC0+-200	00746	MCR03-F-1471
R308	0699-3976	1	RESISTOR 17.8K +-1% .063W TKF TC0+-200	09891	RK73H1J1782F
R309	0699-3970	1	RESISTOR 10K +-1% .063W TKF TC0+-200	09891	RK73H1J1002F
R310	0699-3970	1	RESISTOR 10K +-1% .063W TKF TC0+-200	09891	RK73H1J1002F
R311	0699-3970	1	RESISTOR 10K +-1% .063W TKF TC0+-200	09891	RK73H1J1002F
R312	0699-3970	1	RESISTOR 10K +-1% .063W TKF TC0+-200	09891	RK73H1J1002F
R313	0699-3984	1	RESISTOR 38.3K +-1% .063W TKF TC0+-200	09891	RK73H1J3832F
R314	0699-3984	1	RESISTOR 38.3K +-1% .063W TKF TC0+-200	09891	RK73H1J3832F
R315	0699-3993	1	RESISTOR 100K +-1% .063W TKF TC0+-200	09891	RK73H1J1003F
R316	0699-3964	1	RESISTOR 5.11K +-1% .063W TKF TC0+-200	09891	RK73H1J5111F
R317	0699-3990	1	RESISTOR 75K +-1% .063W TKF TC0+-200	09891	RK73H1J7502F
R318	0699-3973	1	RESISTOR 13.3K +-1% .063W TKF TC0+-200	09891	RK73H1J1332F
R319	0699-4010	1	RESISTOR 511K +-1% .063W TKF TC0+-200	09891	RK73H1J5113F
R320	0699-3970	1	RESISTOR 10K +-1% .063W TKF TC0+-200	09891	RK73H1J1002F
R321	0699-3972	1	RESISTOR 12.1K +-1% .063W TKF TC0+-200	09891	RK73H1J1212F
R322	0699-1374	1	RESISTOR 1.78K +-1% .125W TKF TC0+-100	09891	RK73H2BT1781F
R323	0699-3951	1	RESISTOR 1.47K +-1% .063W TKF TC0+-200	00746	MCR03-F-1471
R324	0699-3932	1	RESISTOR 215 +-1% .063W TKF TC0+-200	00746	MCR03-F-2150
R325	0699-3924	1	RESISTOR 100 +-1% .063W TKF TC0+-200	00746	MCR03-F-1000
R326	0699-3964	1	RESISTOR 5.11K +-1% .063W TKF TC0+-200	09891	RK73H1J5111F
R327	0699-3970	1	RESISTOR 10K +-1% .063W TKF TC0+-200	09891	RK73H1J1002F
R328	0699-1365	1	RESISTOR 75 +-1% .125W TKF TC0+-100	05524	CRCW120675R0F
R329	0699-3922	1	RESISTOR 82.5 +-1% .063W TKF TC0+-200	09891	RK73H1J82R5F
R330	0699-3929	1	RESISTOR 162 +-1% .063W TKF TC0+-200	09891	RK73H1J1620F
R331	0699-3913	1	RESISTOR 31.6 +-1% .063W TKF TC0+-200	09891	RK73H1J31R6F
R332	0699-1367	1	RESISTOR 90.9 +-1% .125W TKF TC0+-100	05524	CRCW120690R9F
R333	0699-1367	1	RESISTOR 90.9 +-1% .125W TKF TC0+-100	05524	CRCW120690R9F
R334	0699-1367	1	RESISTOR 90.9 +-1% .125W TKF TC0+-100	05524	CRCW120690R9F

 **Indicates factory-selected value*

Agilent Part Number E4401-60100
1.5 GHz RF (75 Ohm)

Reference Designator	Agilent Part Number	Qty	Description	Mgr Code	Mfr Part Number
R335	0699-1367	1	RESISTOR 90.9 +-1% .125W TKF TC0+-100	05524	CRCW120690R9F
R336	0699-1367	1	RESISTOR 90.9 +-1% .125W TKF TC0+-100	05524	CRCW120690R9F
R337	0699-1364	1	RESISTOR 68.1 +-1% .125W TKF TC0+-100	05524	CRCW120668R1F
R338	0699-1364	1	RESISTOR 68.1 +-1% .125W TKF TC0+-100	05524	CRCW120668R1F
R339	0699-1364	1	RESISTOR 68.1 +-1% .125W TKF TC0+-100	05524	CRCW120668R1F
R340	0699-1364	1	RESISTOR 68.1 +-1% .125W TKF TC0+-100	05524	CRCW120668R1F
R341	0699-3935	1	RESISTOR 287 +-1% .063W TKF TC0+-200	00746	MCR03-F-2870
R342	0699-3908	1	RESISTOR 19.6 +-1% .063W TKF TC0+-200	09891	RK73H1J19R6F
R343	0699-3947	1	RESISTOR 1K +-1% .063W TKF TC0+-200	00746	MCR03-F-1001
R344	0699-3907	1	RESISTOR 17.8 +-1% .063W TKF TC0+-200	09891	RK73H1J17R8F
R345	0699-3935	1	RESISTOR 287 +-1% .063W TKF TC0+-200	00746	MCR03-F-2870
R346	0699-3941	1	RESISTOR 511 +-1% .063W TKF TC0+-200	00746	MCR03-F-5110
R347	0699-3918	1	RESISTOR 51.1 +-1% .063W TKF TC0+-200	00746	MCR03-F-51R1
R348	0699-3918	1	RESISTOR 51.1 +-1% .063W TKF TC0+-200	00746	MCR03-F-51R1
R349	0699-3934	1	RESISTOR 261 +-1% .063W TKF TC0+-200	09891	RK73H1J2610F
R350	0699-3926	1	RESISTOR 121 +-1% .063W TKF TC0+-200	00746	MCR03-F-1210
R351	0699-3926	1	RESISTOR 121 +-1% .063W TKF TC0+-200	00746	MCR03-F-1210
R352	0699-3918	1	RESISTOR 51.1 +-1% .063W TKF TC0+-200	00746	MCR03-F-51R1
R353	0699-3941	1	RESISTOR 511 +-1% .063W TKF TC0+-200	00746	MCR03-F-5110
R354	0699-1365	1	RESISTOR 75 +-1% .125W TKF TC0+-100	05524	CRCW120675R0F
R355	0699-1365	1	RESISTOR 75 +-1% .125W TKF TC0+-100	05524	CRCW120675R0F
R356	0699-1365	1	RESISTOR 75 +-1% .125W TKF TC0+-100	05524	CRCW120675R0F
R357	0699-1365	1	RESISTOR 75 +-1% .125W TKF TC0+-100	05524	CRCW120675R0F
R358	0699-3916	1	RESISTOR 42.2 +-1% .063W TKF TC0+-200	09891	RK73H1J42R2F
R359	0699-3927	1	RESISTOR 133 +-1% .063W TKF TC0+-200	00746	MCR03-F-1330
R360	0699-3941	1	RESISTOR 511 +-1% .063W TKF TC0+-200	00746	MCR03-F-5110
R361	0699-1365	1	RESISTOR 75 +-1% .125W TKF TC0+-100	05524	CRCW120675R0F
R362	0699-1365	1	RESISTOR 75 +-1% .125W TKF TC0+-100	05524	CRCW120675R0F
R363	0699-1365	1	RESISTOR 75 +-1% .125W TKF TC0+-100	05524	CRCW120675R0F
R364	0699-1365	1	RESISTOR 75 +-1% .125W TKF TC0+-100	05524	CRCW120675R0F

Agilent Part Number E4401-60100
1.5 GHz RF (75 Ohm)

Reference Designator	Agilent Part Number	Qty	Description	Mgr Code	Mfr Part Number
R365	0699-3941	1	RESISTOR 511 +-1% .063W TKF TC0+-200	00746	MCR03-F-5110
R366	0699-3927	1	RESISTOR 133 +-1% .063W TKF TC0+-200	00746	MCR03-F-1330
R367	0699-3970	1	RESISTOR 10K +-1% .063W TKF TC0+-200	09891	RK73H1J1002F
R368	0699-3970	1	RESISTOR 10K +-1% .063W TKF TC0+-200	09891	RK73H1J1002F
R369	0699-3959	1	RESISTOR 3.16K +-1% .063W TKF TC0+-200	00746	MCR03-F-3161
R370	0699-3964	1	RESISTOR 5.11K +-1% .063W TKF TC0+-200	09891	RK73H1J5111F
R371	0699-3955	1	RESISTOR 2.15K +-1% .063W TKF TC0+-200	09891	RK73H1J2151F
R372	0699-3947	1	RESISTOR 1K +-1% .063W TKF TC0+-200	00746	MCR03-F-1001
R373	0699-3918	1	RESISTOR 51.1 +-1% .063W TKF TC0+-200	00746	MCR03-F-51R1
R374	0699-3941	1	RESISTOR 511 +-1% .063W TKF TC0+-200	00746	MCR03-F-5110
R375	0699-3970	1	RESISTOR 10K +-1% .063W TKF TC0+-200	09891	RK73H1J1002F
R376	0699-2829	1	RESISTOR 50 +-0.1% .125W TF TC0+-25	02499	W1206R030500BT
R377	0699-2840	1	RESISTOR 2.5K +-0.1% .125W TF TC0+-25	02499	W1206R032501BT
R378	0699-2840	1	RESISTOR 2.5K +-0.1% .125W TF TC0+-25	02499	W1206R032501BT
R379	0699-2829	1	RESISTOR 50 +-0.1% .125W TF TC0+-25	02499	W1206R030500BT
R380	0699-1361	1	RESISTOR 51.1 +-1% .125W TKF TC0+-100	05524	CRCW120651R1F
R381	0699-3982	1	RESISTOR 31.6K +-1% .063W TKF TC0+-200	09891	RK73H1J3162F
R382	0699-3978	1	RESISTOR 21.5K +-1% .063W TKF TC0+-200	09891	RK73H1J2152F
R383	0699-3924	1	RESISTOR 100 +-1% .063W TKF TC0+-200	00746	MCR03-F-1000
R384	0699-3947	1	RESISTOR 1K +-1% .063W TKF TC0+-200	00746	MCR03-F-1001
R385	0699-3944	1	RESISTOR 750 +-1% .063W TKF TC0+-200	09891	RK73H1J7500F
R386	0699-3918	1	RESISTOR 51.1 +-1% .063W TKF TC0+-200	00746	MCR03-F-51R1
R387	0699-3918	1	RESISTOR 51.1 +-1% .063W TKF TC0+-200	00746	MCR03-F-51R1
R388	0699-1427	1	RESISTOR 316 +-1% .125W TKF TC0+-100	09891	RK73H2BT3160F
R389	0699-1427	1	RESISTOR 316 +-1% .125W TKF TC0+-100	09891	RK73H2BT3160F
R390	0699-1427	1	RESISTOR 316 +-1% .125W TKF TC0+-100	09891	RK73H2BT3160F
R391	0699-3956	1	RESISTOR 2.37K +-1% .063W TKF TC0+-200	09891	RK73H1J2371F
R392	0699-3947	1	RESISTOR 1K +-1% .063W TKF TC0+-200	00746	MCR03-F-1001
R393	0699-3964	1	RESISTOR 5.11K +-1% .063W TKF TC0+-200	09891	RK73H1J5111F
R394	0699-3930	1	RESISTOR 178 +-1% .063W TKF TC0+-200	00746	MCR03-F-1780

 **Indicates factory-selected value*

Agilent Part Number E4401-60100
1.5 GHz RF (75 Ohm)

Reference Designator	Agilent Part Number	Qty	Description	Mgr Code	Mfr Part Number
R395	0699-3961	1	RESISTOR 3.83K +-1% .063W TKF TC0+-200	09891	RK73H1J3831F
R396	0699-3974	1	RESISTOR 14.7K +-1% .063W TKF TC0+-200	00746	MCR03-F-1472
R397	0699-1358	1	RESISTOR 38.3 +-1% .125W TKF TC0+-100	09891	RK73H2BT38R3F
R398	0699-1358	1	RESISTOR 38.3 +-1% .125W TKF TC0+-100	09891	RK73H2BT38R3F
R399	0699-1358	1	RESISTOR 38.3 +-1% .125W TKF TC0+-100	09891	RK73H2BT38R3F
R400	0699-3974	1	RESISTOR 14.7K +-1% .063W TKF TC0+-200	00746	MCR03-F-1472
R401	0699-1358	1	RESISTOR 38.3 +-1% .125W TKF TC0+-100	09891	RK73H2BT38R3F
R402	0699-1358	1	RESISTOR 38.3 +-1% .125W TKF TC0+-100	09891	RK73H2BT38R3F
R403	0699-3968	1	RESISTOR 8.25K +-1% .063W TKF TC0+-200	09891	RK73H1J8251F
R404	0699-3367	1	RESISTOR 5.62K +-1% .0625W TKF TC0+-200	00746	MCR03-F-5621
R405	0699-3907	1	RESISTOR 17.8 +-1% .063W TKF TC0+-200	09891	RK73H1J17R8F
R406	0699-3924	1	RESISTOR 100 +-1% .063W TKF TC0+-200	00746	MCR03-F-1000
R407	0699-3913	1	RESISTOR 31.6 +-1% .063W TKF TC0+-200	09891	RK73H1J31R6F
R408	0699-3961	1	RESISTOR 3.83K +-1% .063W TKF TC0+-200	09891	RK73H1J3831F
R409	0699-3964	1	RESISTOR 5.11K +-1% .063W TKF TC0+-200	09891	RK73H1J5111F
R410	0699-3930	1	RESISTOR 178 +-1% .063W TKF TC0+-200	00746	MCR03-F-1780
R411	0699-3961	1	RESISTOR 3.83K +-1% .063W TKF TC0+-200	09891	RK73H1J3831F
R412	0699-3941	1	RESISTOR 511 +-1% .063W TKF TC0+-200	00746	MCR03-F-5110
R413	0699-3974	1	RESISTOR 14.7K +-1% .063W TKF TC0+-200	00746	MCR03-F-1472
R414	0699-1358	1	RESISTOR 38.3 +-1% .125W TKF TC0+-100	09891	RK73H2BT38R3F
R415	0699-3970	1	RESISTOR 10K +-1% .063W TKF TC0+-200	09891	RK73H1J1002F
R416	0699-1358	1	RESISTOR 38.3 +-1% .125W TKF TC0+-100	09891	RK73H2BT38R3F
R417	0699-3974	1	RESISTOR 14.7K +-1% .063W TKF TC0+-200	00746	MCR03-F-1472
R418	0699-1358	1	RESISTOR 38.3 +-1% .125W TKF TC0+-100	09891	RK73H2BT38R3F
R419	0699-1358	1	RESISTOR 38.3 +-1% .125W TKF TC0+-100	09891	RK73H2BT38R3F
R420	0699-1358	1	RESISTOR 38.3 +-1% .125W TKF TC0+-100	09891	RK73H2BT38R3F
R421	0699-3964	1	RESISTOR 5.11K +-1% .063W TKF TC0+-200	09891	RK73H1J5111F
R422	0699-3964	1	RESISTOR 5.11K +-1% .063W TKF TC0+-200	09891	RK73H1J5111F
R423	0699-3924	1	RESISTOR 100 +-1% .063W TKF TC0+-200	00746	MCR03-F-1000
R424	0699-3935	1	RESISTOR 287 +-1% .063W TKF TC0+-200	00746	MCR03-F-2870

Agilent Part Number E4401-60100
1.5 GHz RF (75 Ohm)

Reference Designator	Agilent Part Number	Qty	Description	Mgr Code	Mfr Part Number
R425	0699-3961	1	RESISTOR 3.83K +-1% .063W TKF TC0+-200	09891	RK73H1J3831F
R426	0699-3913	1	RESISTOR 31.6 +-1% .063W TKF TC0+-200	09891	RK73H1J31R6F
R427	0699-3930	1	RESISTOR 178 +-1% .063W TKF TC0+-200	00746	MCR03-F-1780
R428	0699-3961	1	RESISTOR 3.83K +-1% .063W TKF TC0+-200	09891	RK73H1J3831F
R429	0699-3964	1	RESISTOR 5.11K +-1% .063W TKF TC0+-200	09891	RK73H1J5111F
R430	0699-3974	1	RESISTOR 14.7K +-1% .063W TKF TC0+-200	00746	MCR03-F-1472
R431	0699-1358	1	RESISTOR 38.3 +-1% .125W TKF TC0+-100	09891	RK73H2BT38R3F
R432	0699-1358	1	RESISTOR 38.3 +-1% .125W TKF TC0+-100	09891	RK73H2BT38R3F
R433	0699-1358	1	RESISTOR 38.3 +-1% .125W TKF TC0+-100	09891	RK73H2BT38R3F
R434	0699-3974	1	RESISTOR 14.7K +-1% .063W TKF TC0+-200	00746	MCR03-F-1472
R435	0699-1358	1	RESISTOR 38.3 +-1% .125W TKF TC0+-100	09891	RK73H2BT38R3F
R436	0699-1358	1	RESISTOR 38.3 +-1% .125W TKF TC0+-100	09891	RK73H2BT38R3F
R437	0699-3964	1	RESISTOR 5.11K +-1% .063W TKF TC0+-200	09891	RK73H1J5111F
R438	0699-3964	1	RESISTOR 5.11K +-1% .063W TKF TC0+-200	09891	RK73H1J5111F
R439	0699-3924	1	RESISTOR 100 +-1% .063W TKF TC0+-200	00746	MCR03-F-1000
R440	0699-3935	1	RESISTOR 287 +-1% .063W TKF TC0+-200	00746	MCR03-F-2870
R441	0699-3913	1	RESISTOR 31.6 +-1% .063W TKF TC0+-200	09891	RK73H1J31R6F
R442	0699-3961	1	RESISTOR 3.83K +-1% .063W TKF TC0+-200	09891	RK73H1J3831F
R443	0699-3941	1	RESISTOR 511 +-1% .063W TKF TC0+-200	00746	MCR03-F-5110
R444	0699-3947	1	RESISTOR 1K +-1% .063W TKF TC0+-200	00746	MCR03-F-1001
R445	0699-3929	1	RESISTOR 162 +-1% .063W TKF TC0+-200	09891	RK73H1J1620F
R446	0699-3964	1	RESISTOR 5.11K +-1% .063W TKF TC0+-200	09891	RK73H1J5111F
R447	0699-3903	1	RESISTOR 12.1 +-1% .063W TKF TC0+-200	09891	RK7H1J12R1F
R448	0699-3939	1	RESISTOR 422 +-1% .063W TKF TC0+-200	09891	RK73H1J4220F
R449	0699-3964	1	RESISTOR 5.11K +-1% .063W TKF TC0+-200	09891	RK73H1J5111F
R450	0699-3939	1	RESISTOR 422 +-1% .063W TKF TC0+-200	09891	RK73H1J4220F
R451	0699-3970	1	RESISTOR 10K +-1% .063W TKF TC0+-200	09891	RK73H1J1002F
R452	0699-3956	1	RESISTOR 2.37K +-1% .063W TKF TC0+-200	09891	RK73H1J2371F
R453	0699-3924	1	RESISTOR 100 +-1% .063W TKF TC0+-200	00746	MCR03-F-1000
R454	0699-3990	1	RESISTOR 75K +-1% .063W TKF TC0+-200	09891	RK73H1J7502F

 **Indicates factory-selected value*

Agilent Part Number E4401-60100
1.5 GHz RF (75 Ohm)

Reference Designator	Agilent Part Number	Qty	Description	Mgr Code	Mfr Part Number
R455	0699-3970	1	RESISTOR 10K +-1% .063W TKF TC0+-200	09891	RK73H1J1002F
R456	0699-3950	1	RESISTOR 1.33K +-1% .063W TKF TC0+-200	09891	RK73H1J1331F
R457	0699-3972	1	RESISTOR 12.1K +-1% .063W TKF TC0+-200	09891	RK73H1J1212F
R458	0699-3990	1	RESISTOR 75K +-1% .063W TKF TC0+-200	09891	RK73H1J7502F
R459	0699-3924	1	RESISTOR 100 +-1% .063W TKF TC0+-200	00746	MCR03-F-1000
R460	0699-3950	1	RESISTOR 1.33K +-1% .063W TKF TC0+-200	09891	RK73H1J1331F
R461	0699-1374	1	RESISTOR 1.78K +-1% .125W TKF TC0+-100	09891	RK73H2BT1781F
R462	0699-3932	1	RESISTOR 215 +-1% .063W TKF TC0+-200	00746	MCR03-F-2150
R463	0699-3970	1	RESISTOR 10K +-1% .063W TKF TC0+-200	09891	RK73H1J1002F
R464	0699-3929	1	RESISTOR 162 +-1% .063W TKF TC0+-200	09891	RK73H1J1620F
R465	0699-1363	1	RESISTOR 61.9 +-1% .125W TKF TC0+-100	05524	CRCW120661R9F
R466	0699-1416	1	RESISTOR 110 +-1% .125W TKF TC0+-100	05524	CRCW12061100F
R467	0699-1416	1	RESISTOR 110 +-1% .125W TKF TC0+-100	05524	CRCW12061100F
R468	0699-3918	1	RESISTOR 51.1 +-1% .063W TKF TC0+-200	00746	MCR03-F-51R1
R469	0699-3913	1	RESISTOR 31.6 +-1% .063W TKF TC0+-200	09891	RK73H1J31R6F
R470	0699-1416	1	RESISTOR 110 +-1% .125W TKF TC0+-100	05524	CRCW12061100F
R471	0699-1416	1	RESISTOR 110 +-1% .125W TKF TC0+-100	05524	CRCW12061100F
R472	0699-1416	1	RESISTOR 110 +-1% .125W TKF TC0+-100	05524	CRCW12061100F
R473	0699-3908	1	RESISTOR 19.6 +-1% .063W TKF TC0+-200	09891	RK73H1J19R6F
R474	0699-1358	1	RESISTOR 38.3 +-1% .125W TKF TC0+-100	09891	RK73H2BT38R3F
R475	0699-3941	1	RESISTOR 511 +-1% .063W TKF TC0+-200	00746	MCR03-F-5110
R476	0699-1358	1	RESISTOR 38.3 +-1% .125W TKF TC0+-100	09891	RK73H2BT38R3F
R477	0699-1358	1	RESISTOR 38.3 +-1% .125W TKF TC0+-100	09891	RK73H2BT38R3F
R478	0699-1358	1	RESISTOR 38.3 +-1% .125W TKF TC0+-100	09891	RK73H2BT38R3F
R479	0699-3920	1	RESISTOR 68.1 +-1% .063W TKF TC0+-200	09891	RK73H1J68R1F
R480	0699-3947	1	RESISTOR 1K +-1% .063W TKF TC0+-200	00746	MCR03-F-1001
R481	0699-3901	1	RESISTOR 10 +-1% .063W TKF TC0+-200	00746	MCR03-F-10R0
R482	0699-3901	1	RESISTOR 10 +-1% .063W TKF TC0+-200	00746	MCR03-F-10R0
R483	0699-3930	1	RESISTOR 178 +-1% .063W TKF TC0+-200	00746	MCR03-F-1780
R484	0699-1357	1	RESISTOR 34.8 +-1% .125W TKF TC0+-100	09891	RK73H2BT34R8F

Agilent Part Number E4401-60100
1.5 GHz RF (75 Ohm)

Reference Designator	Agilent Part Number	Qty	Description	Mgr Code	Mfr Part Number
R485	0699-1415	1	RESISTOR 100 +-1% .125W TKF TC0+-100	05524	CRCW12061000F
R486	0699-1357	1	RESISTOR 34.8 +-1% .125W TKF TC0+-100	09891	RK73H2BT34R8F
R487	0699-1357	1	RESISTOR 34.8 +-1% .125W TKF TC0+-100	09891	RK73H2BT34R8F
R488	0699-1415	1	RESISTOR 100 +-1% .125W TKF TC0+-100	05524	CRCW12061000F
R489	0699-1415	1	RESISTOR 100 +-1% .125W TKF TC0+-100	05524	CRCW12061000F
R490	0699-3926	1	RESISTOR 121 +-1% .063W TKF TC0+-200	00746	MCR03-F-1210
R491	0699-3916	1	RESISTOR 42.2 +-1% .063W TKF TC0+-200	09891	RK73H1J42R2F
R492	0699-1357	1	RESISTOR 34.8 +-1% .125W TKF TC0+-100	09891	RK73H2BT34R8F
R493	0699-1357	1	RESISTOR 34.8 +-1% .125W TKF TC0+-100	09891	RK73H2BT34R8F
R494	0699-1415	1	RESISTOR 100 +-1% .125W TKF TC0+-100	05524	CRCW12061000F
R495	0699-3926	1	RESISTOR 121 +-1% .063W TKF TC0+-200	00746	MCR03-F-1210
R496	0699-3964	1	RESISTOR 5.11K +-1% .063W TKF TC0+-200	09891	RK73H1J5111F
R497	0699-3948	1	RESISTOR 1.1K +-1% .063W TKF TC0+-200	00746	MCR03-F-1101
R498	0699-3942	1	RESISTOR 619 +-1% .063W TKF TC0+-200	00746	MCR03-F-6190
R499	0699-3942	1	RESISTOR 619 +-1% .063W TKF TC0+-200	00746	MCR03-F-6190
R500	0699-3963	1	RESISTOR 4.64K +-1% .063W TKF TC0+-200	09891	RK73H1J4641F
R501	0699-3942	1	RESISTOR 619 +-1% .063W TKF TC0+-200	00746	MCR03-F-6190
R502	0699-3942	1	RESISTOR 619 +-1% .063W TKF TC0+-200	00746	MCR03-F-6190
R503	0699-3963	1	RESISTOR 4.64K +-1% .063W TKF TC0+-200	09891	RK73H1J4641F
R504	0699-3955	1	RESISTOR 2.15K +-1% .063W TKF TC0+-200	09891	RK73H1J2151F
R505	0699-3955	1	RESISTOR 2.15K +-1% .063W TKF TC0+-200	09891	RK73H1J2151F
R506	0699-3918	1	RESISTOR 51.1 +-1% .063W TKF TC0+-200	00746	MCR03-F-51R1
R507	0699-3952	1	RESISTOR 1.62K +-1% .063W TKF TC0+-200	09891	RK73H1J1621F
R508	0699-3928	1	RESISTOR 147 +-1% .063W TKF TC0+-200	00746	MCR03-F-1470
R509	0699-3919	1	RESISTOR 61.9 +-1% .063W TKF TC0+-200	05524	CRCW060361R9F
R510	0699-3918	1	RESISTOR 51.1 +-1% .063W TKF TC0+-200	00746	MCR03-F-51R1
R511	0699-3963	1	RESISTOR 4.64K +-1% .063W TKF TC0+-200	09891	RK73H1J4641F
R512	0699-3970	1	RESISTOR 10K +-1% .063W TKF TC0+-200	09891	RK73H1J1002F
R513	0699-3952	1	RESISTOR 1.62K +-1% .063W TKF TC0+-200	09891	RK73H1J1621F
R514	0699-3964	1	RESISTOR 5.11K +-1% .063W TKF TC0+-200	09891	RK73H1J5111F

 **Indicates factory-selected value*

Agilent Part Number E4401-60100
1.5 GHz RF (75 Ohm)

Reference Designator	Agilent Part Number	Qty	Description	Mgr Code	Mfr Part Number
R515	0699-3574	1	RESISTOR 0 .0625W TKF	09891	RM73Z1JT
R516	0699-3964	1	RESISTOR 5.11K +-1% .063W TKF TC0+-200	09891	RK73H1J5111F
R517	0699-3941	1	RESISTOR 511 +-1% .063W TKF TC0+-200	00746	MCR03-F-5110
R518	0699-3918	1	RESISTOR 51.1 +-1% .063W TKF TC0+-200	00746	MCR03-F-51R1
R519	0699-3941	1	RESISTOR 511 +-1% .063W TKF TC0+-200	00746	MCR03-F-5110
R520	0699-3955	1	RESISTOR 2.15K +-1% .063W TKF TC0+-200	09891	RK73H1J2151F
R521	0699-3955	1	RESISTOR 2.15K +-1% .063W TKF TC0+-200	09891	RK73H1J2151F
R522	0699-3918	1	RESISTOR 51.1 +-1% .063W TKF TC0+-200	00746	MCR03-F-51R1
R523	0699-2835	1	RESISTOR 500 +-0.1% .125W TF TC0+-25	02499	W1206R035000BT
R524	0699-3955	1	RESISTOR 2.15K +-1% .063W TKF TC0+-200	09891	RK73H1J2151F
R525	0699-3575	1	RESISTOR 75 +-0.1% .125W TF TC0+-25	01172	BLU-1206 75R .1% 25PPM
R526	0699-3939	1	RESISTOR 422 +-1% .063W TKF TC0+-200	09891	RK73H1J4220F
R527	0699-3903	1	RESISTOR 12.1 +-1% .063W TKF TC0+-200	09891	RK7H1J12R1F
R528	0699-3939	1	RESISTOR 422 +-1% .063W TKF TC0+-200	09891	RK73H1J4220F
R529	1810-1360	1	NET-RES 8 10.0K OHM 16-PIN	05524	SOMC-1603-103G
R530	0699-1422	1	RESISTOR 196 +-1% .125W TKF TC0+-100	09891	RK73H2BT1960F
R531	0699-1422	1	RESISTOR 196 +-1% .125W TKF TC0+-100	09891	RK73H2BT1960F
R532	0699-1422	1	RESISTOR 196 +-1% .125W TKF TC0+-100	09891	RK73H2BT1960F
R533	0699-3970	1	RESISTOR 10K +-1% .063W TKF TC0+-200	09891	RK73H1J1002F
R534	0699-3977	1	RESISTOR 19.6K +-1% .063W TKF TC0+-200	09891	RK73H1J1962F
R535	0699-3984	1	RESISTOR 38.3K +-1% .063W TKF TC0+-200	09891	RK73H1J3832F
R536	0699-3944	1	RESISTOR 750 +-1% .063W TKF TC0+-200	09891	RK73H1J7500F
R537	0699-3993	1	RESISTOR 100K +-1% .063W TKF TC0+-200	09891	RK73H1J1003F
R538	0699-3901	1	RESISTOR 10 +-1% .063W TKF TC0+-200	00746	MCR03-F-10R0
R539	0699-3970	1	RESISTOR 10K +-1% .063W TKF TC0+-200	09891	RK73H1J1002F
R540	0699-3924	1	RESISTOR 100 +-1% .063W TKF TC0+-200	00746	MCR03-F-1000
R541	0699-3924	1	RESISTOR 100 +-1% .063W TKF TC0+-200	00746	MCR03-F-1000
R542	0699-3924	1	RESISTOR 100 +-1% .063W TKF TC0+-200	00746	MCR03-F-1000
R543	0699-3924	1	RESISTOR 100 +-1% .063W TKF TC0+-200	00746	MCR03-F-1000

Agilent Part Number E4401-60100
1.5 GHz RF (75 Ohm)

Reference Designator	Agilent Part Number	Qty	Description	Mgr Code	Mfr Part Number
R544	0699-3914	1	RESISTOR 34.8 +-1% .063W TKF TC0+-200	00746	MCR03-F-34R8
R545	0699-3914	1	RESISTOR 34.8 +-1% .063W TKF TC0+-200	00746	MCR03-F-34R8
R546	0699-3941	1	RESISTOR 511 +-1% .063W TKF TC0+-200	00746	MCR03-F-5110
R547	0699-3951	1	RESISTOR 1.47K +-1% .063W TKF TC0+-200	00746	MCR03-F-1471
R548	0699-3932	1	RESISTOR 215 +-1% .063W TKF TC0+-200	00746	MCR03-F-2150
R549	0699-3914	1	RESISTOR 34.8 +-1% .063W TKF TC0+-200	00746	MCR03-F-34R8
R550	1810-1659	1	NET-RES 4 220.0 OHM 8-PIN	00746	MNR34K5ABJ221
R551	1810-1659	1	NET-RES 4 220.0 OHM 8-PIN	00746	MNR34K5ABJ221
R552	0699-3941	1	RESISTOR 511 +-1% .063W TKF TC0+-200	00746	MCR03-F-5110
R553	0699-3941	1	RESISTOR 511 +-1% .063W TKF TC0+-200	00746	MCR03-F-5110
R554	0699-3928	1	RESISTOR 147 +-1% .063W TKF TC0+-200	00746	MCR03-F-1470
R555	0699-3928	1	RESISTOR 147 +-1% .063W TKF TC0+-200	00746	MCR03-F-1470
R556	0699-3928	1	RESISTOR 147 +-1% .063W TKF TC0+-200	00746	MCR03-F-1470
R557	0699-1430	1	RESISTOR 422 +-1% .125W TKF TC0+-100	05524	CRCW12064220F
R558	0699-1430	1	RESISTOR 422 +-1% .125W TKF TC0+-100	05524	CRCW12064220F
R559	0699-3970	1	RESISTOR 10K +-1% .063W TKF TC0+-200	09891	RK73H1J1002F
R560	0699-3977	1	RESISTOR 19.6K +-1% .063W TKF TC0+-200	09891	RK73H1J1962F
R561	0699-3970	1	RESISTOR 10K +-1% .063W TKF TC0+-200	09891	RK73H1J1002F
R562	0699-3999	1	RESISTOR 178K +-1% .063W TKF TC0+-200	09891	RK73H1J1783F
R563	0699-3954	1	RESISTOR 1.96K +-1% .063W TKF TC0+-200	09891	RK73H1J1961F
R564	0699-3954	1	RESISTOR 1.96K +-1% .063W TKF TC0+-200	09891	RK73H1J1961F
R565	0699-3909	1	RESISTOR 21.5 +-1% .063W TKF TC0+-200	09891	RK73H1J21R5F
R566	0699-1361	1	RESISTOR 51.1 +-1% .125W TKF TC0+-100	05524	CRCW120651R1F
R567	0699-3973	1	RESISTOR 13.3K +-1% .063W TKF TC0+-200	09891	RK73H1J1332F
R568	0699-3901	1	RESISTOR 10 +-1% .063W TKF TC0+-200	00746	MCR03-F-10R0
R569	0699-3970	1	RESISTOR 10K +-1% .063W TKF TC0+-200	09891	RK73H1J1002F
R570	0699-3970	1	RESISTOR 10K +-1% .063W TKF TC0+-200	09891	RK73H1J1002F
R571	0699-3970	1	RESISTOR 10K +-1% .063W TKF TC0+-200	09891	RK73H1J1002F
R572	0699-3928	1	RESISTOR 147 +-1% .063W TKF TC0+-200	00746	MCR03-F-1470
R573	0699-3930	1	RESISTOR 178 +-1% .063W TKF TC0+-200	00746	MCR03-F-1780

 **Indicates factory-selected value*

Agilent Part Number E4401-60100
1.5 GHz RF (75 Ohm)

Reference Designator	Agilent Part Number	Qty	Description	Mgr Code	Mfr Part Number
R574	0699-3947	1	RESISTOR 1K +-1% .063W TKF TC0+-200	00746	MCR03-F-1001
R575	0699-3909	1	RESISTOR 21.5 +-1% .063W TKF TC0+-200	09891	RK73H1J21R5F
R576	0699-3955	1	RESISTOR 2.15K +-1% .063W TKF TC0+-200	09891	RK73H1J2151F
R577	0699-3964	1	RESISTOR 5.11K +-1% .063W TKF TC0+-200	09891	RK73H1J5111F
R578	0699-3941	1	RESISTOR 511 +-1% .063W TKF TC0+-200	00746	MCR03-F-5110
R579	0699-3918	1	RESISTOR 51.1 +-1% .063W TKF TC0+-200	00746	MCR03-F-51R1
R580	0699-3908	1	RESISTOR 19.6 +-1% .063W TKF TC0+-200	09891	RK73H1J19R6F
R581	0699-1422	1	RESISTOR 196 +-1% .125W TKF TC0+-100	09891	RK73H2BT1960F
R582	1810-1659	1	NET-RES 4 220.0 OHM 8-PIN	00746	MNR34K5ABJ221
R583	0699-3947	1	RESISTOR 1K +-1% .063W TKF TC0+-200	00746	MCR03-F-1001
R584	0699-3941	1	RESISTOR 511 +-1% .063W TKF TC0+-200	00746	MCR03-F-5110
R585	0699-3947	1	RESISTOR 1K +-1% .063W TKF TC0+-200	00746	MCR03-F-1001
R586	0699-3947	1	RESISTOR 1K +-1% .063W TKF TC0+-200	00746	MCR03-F-1001
R587	0699-3947	1	RESISTOR 1K +-1% .063W TKF TC0+-200	00746	MCR03-F-1001
R588	0699-3947	1	RESISTOR 1K +-1% .063W TKF TC0+-200	00746	MCR03-F-1001
R589	0699-3947	1	RESISTOR 1K +-1% .063W TKF TC0+-200	00746	MCR03-F-1001
R590	0699-3909	1	RESISTOR 21.5 +-1% .063W TKF TC0+-200	09891	RK73H1J21R5F
R591	0699-3918	1	RESISTOR 51.1 +-1% .063W TKF TC0+-200	00746	MCR03-F-51R1
R592	0699-3955	1	RESISTOR 2.15K +-1% .063W TKF TC0+-200	09891	RK73H1J2151F
R593	0699-3953	1	RESISTOR 1.78K +-1% .063W TKF TC0+-200	00746	MCR03-F-1781
R594	0699-3964	1	RESISTOR 5.11K +-1% .063W TKF TC0+-200	09891	RK73H1J5111F
R596	0699-3918	1	RESISTOR 51.1 +-1% .063W TKF TC0+-200	00746	MCR03-F-51R1
R603	0699-3939	1	RESISTOR 422 +-1% .063W TKF TC0+-200	09891	RK73H1J4220F
R604	0699-3903	1	RESISTOR 12.1 +-1% .063W TKF TC0+-200	09891	RK7H1J12R1F
R605	0699-3939	1	RESISTOR 422 +-1% .063W TKF TC0+-200	09891	RK73H1J4220F
R606	1810-1660	1	NET-RES 4 3.3K OHM 8-PIN	00746	MNR34K5ABJ332
R607	0699-3960	1	RESISTOR 3.48K +-1% .063W TKF TC0+-200	09891	RK73H1J3481F
R750	0699-3913	1	RESISTOR 31.6 +-1% .063W TKF TC0+-200	09891	RK73H1J31R6F
R751	0699-3905	1	RESISTOR 14.7 +-1% .063W TKF TC0+-200	09891	RK73H1J14R7F
R752	0699-3927	1	RESISTOR 133 +-1% .063W TKF TC0+-200	00746	MCR03-F-1330

Agilent Part Number E4401-60100
1.5 GHz RF (75 Ohm)

Reference Designator	Agilent Part Number	Qty	Description	Mgr Code	Mfr Part Number
R753	0699-3924	1	RESISTOR 100 +-1% .063W TKF TC0+-200	00746	MCR03-F-1000
R754	0699-3925	1	RESISTOR 110 +-1% .063W TKF TC0+-200	00746	MCR03-F-1100
U1	1826-1838	1	IC PWR MGT-V-REF-FXD 4.95/5.05V 8 PINS	10858	LT1021DCS8-5
U2	E4401-80030	1	RF CNTL PLD	28480	E4401-80030
U3	E4401-80081	1	PGMD HDR U3	28480	E4401-80081
U4	1820-5804	1	IC SHF-RGTR CMOS/HC SYNC/ASYNC	01698	SN74HC165D
U5	1820-6277	1	IC SHF-RGTR CMOS/HC SYNC/ASYNC SERIAL-IN	02237	MM74HC595M
U6	1820-6277	1	IC SHF-RGTR CMOS/HC SYNC/ASYNC SERIAL-IN	02237	MM74HC595M
U7	1820-6277	1	IC SHF-RGTR CMOS/HC SYNC/ASYNC SERIAL-IN	02237	MM74HC595M
U8	1820-6277	1	IC SHF-RGTR CMOS/HC SYNC/ASYNC SERIAL-IN	02237	MM74HC595M
U9	1820-6277	1	IC SHF-RGTR CMOS/HC SYNC/ASYNC SERIAL-IN	02237	MM74HC595M
U10	1820-6277	1	IC SHF-RGTR CMOS/HC SYNC/ASYNC SERIAL-IN	02237	MM74HC595M
U11	1820-6277	1	IC SHF-RGTR CMOS/HC SYNC/ASYNC SERIAL-IN	02237	MM74HC595M
U12	1858-0104	1	TRANSISTOR ARRAY 16-PIN PLSTC SURFACE	01698	ULN2003AD
U13	1826-1458	1	D/A 8-DGT 16-P-SOIC	02910	DAC-08ED
U14	1826-1458	1	D/A 8-DGT 16-P-SOIC	02910	DAC-08ED
U15	1826-1458	1	D/A 8-DGT 16-P-SOIC	02910	DAC-08ED
U16	1826-1458	1	D/A 8-DGT 16-P-SOIC	02910	DAC-08ED
U17	1826-1687	1	IC PWR MGT-V-REF-FXD 9.95/10.05V 8 PINS	10858	LT1021DCS8-10
U18	1826-1862	1	IC OP AMP LOW-BIAS-H-IMPD DUAL 8 PIN	04078	TL072CD
U19	1820-4966	1	IC FF CMOS/HC D-TYPE POS-EDGE-TRIG	01698	SN74HC74D
U20	1820-5562	1	IC GATE CMOS/HC NOR QUAD 2-INP	02910	74HC02D
U21	1826-2349	1	IC RF/IF AMPL LOW-NOISE 4 PIN	01542	INA-10386
U22	1826-1622	1	IC OP AMP LOW-BIAS-H-IMPD QUAD 14 PIN	01698	TL074CD

 **Indicates factory-selected value*

Agilent Part Number E4401-60100
1.5 GHz RF (75 Ohm)

Reference Designator	Agilent Part Number	Qty	Description	Mgr Code	Mfr Part Number
U23	1818-5997	1	IC 16K-BIT EEPROM 500-NS CMOS	13492	CAT35C116S (UNPRGMD)
U25	1826-1622	1	IC OP AMP LOW-BIAS-H-IMPD QUAD 14 PIN	01698	TL074CD
U26	1826-1458	1	D/A 8-DGT 16-P-SOIC	02910	DAC-08ED
U27	1826-1687	1	IC PWR MGT-V-REF-FXD 9.95/10.05V 8 PINS	10858	LT1021DCS8-10
U28	1826-1458	1	D/A 8-DGT 16-P-SOIC	02910	DAC-08ED
U29	1826-0519	1	IC OP AMP LOW-BIAS-H-IMPD 8 PIN DIP-P	01698	TL071CP
U30	1826-0519	1	IC OP AMP LOW-BIAS-H-IMPD 8 PIN DIP-P	01698	TL071CP
U31	1826-1862	1	IC OP AMP LOW-BIAS-H-IMPD DUAL 8 PIN	04078	TL072CD
U33	1820-5753	1	IC MUXR/DATA-SEL 4-TO-1-LINE 16-SOIC	02910	74HC253D
U34	1820-5950	1	IC INV CMOS/AC HEX 14-SOIC	01698	SN74AC04AD
U35	1826-2513	1	D/A 8-BIT 20-P-SOIC CMOS	03285	DAC-8229FS
U36	1826-3000	1	IC AUDIO AMPL LOW-NOISE DUAL 8 PIN	03285	OP275GS
U37	1826-3000	1	IC AUDIO AMPL LOW-NOISE DUAL 8 PIN	03285	OP275GS
U38	1826-3000	1	IC AUDIO AMPL LOW-NOISE DUAL 8 PIN	03285	OP275GS
U39	1820-5937	1	IC FF CMOS/AC D-TYPE POS-EDGE-TRIG	02237	74AC74SC.
U40	1820-5945	1	IC GATE CMOS/AC NAND QUAD 2-INP	36633	MC74AC00D
U41	1826-1572	1	IC COMPARATOR PRCN DUAL 8 PIN PLSTC-SOIC	02910	LM393D
U42	1820-5937	1	IC FF CMOS/AC D-TYPE POS-EDGE-TRIG	02237	74AC74SC.
U43	1826-1925	1	IC OP AMP LOW-NOISE SINGLE 8 PIN	03285	OP-27GS
U44	1826-1528	1	IC COMPARATOR LP QUAD 14 PIN PLSTC-SOIC	03406	LM339M
U45	1826-1925	1	IC OP AMP LOW-NOISE SINGLE 8 PIN	03285	OP-27GS
U46	1826-1572	1	IC COMPARATOR PRCN DUAL 8 PIN PLSTC-SOIC	02910	LM393D
U47	1826-2888	1	IC TEMP XDCR PRCN SINGLE 8 PIN	03406	LM335AM
U48	1826-2349	1	IC RF/IF AMPL LOW-NOISE 4 PIN	01542	INA-10386
U49	1826-2175	1	IC RF/IF AMPL SINGLE 4 PIN U-WAVE-PILL	01542	MSA-0386-TR1
U50	1826-2175	1	IC RF/IF AMPL SINGLE 4 PIN U-WAVE-PILL	01542	MSA-0386-TR1
U51	1821-2085	1	IC PRESCR ECL SELECTABLE 8-SOIC	28480	1821-2085
U52	1820-5938	1	IC GATE CMOS/ACT NAND QUAD 2-INP	01698	SN74ACT00D

Agilent Part Number E4401-60100
1.5 GHz RF (75 Ohm)

Reference Designator	Agilent Part Number	Qty	Description	Mgr Code	Mfr Part Number
U53	1821-4291	1	IC-ASIC CL-BSD CMOS 64046 PLCC	02037	SC64046FN
U54	1826-1402	1	IC PWR MGT-V-REG-FXD-POS 4.8/5.2V 8 PINS	03406	LM78L05ACM
U55	1821-1821	1	IC-ASIC GT-ARY 60K GATES CMOS 60081	08779	M60081L-0124FP
U56	1826-2147	1	ANALOG MULTIPLEXER 8 CHNL 16 -P-SOIC	05524	DG408DY
U57	1826-1925	1	IC OP AMP LOW-NOISE SINGLE 8 PIN	03285	OP-27GS
U58	1826-2133	1	IC RF/IF AMPL WB 4 PIN U-WAVE-PILL	01542	MSA-1105
U59	1826-3357	1	IC RF/IF AMPL LOW-NOISE 6 PIN	01542	MGA-87563
U60	1826-2133	1	IC RF/IF AMPL WB 4 PIN U-WAVE-PILL	01542	MSA-1105
U61	1826-3358	1	IC RF/IF AMPL LOW-NOISE 6 PIN	01542	MGA-86563
U62	1826-2133	1	IC RF/IF AMPL WB 4 PIN U-WAVE-PILL	01542	MSA-1105
U63	1826-3358	1	IC RF/IF AMPL LOW-NOISE 6 PIN	01542	MGA-86563
U64	1826-3358	1	IC RF/IF AMPL LOW-NOISE 6 PIN	01542	MGA-86563
U65	1826-2888	1	IC TEMP XDCR PRCN SINGLE 8 PIN	03406	LM335AM
U66	1826-2717	1	IC RF/IF AMPL 4 PIN U-WAVE-PILL	01542	MSA-0886
U67	1826-2133	1	IC RF/IF AMPL WB 4 PIN U-WAVE-PILL	01542	MSA-1105
U68	1826-2204	1	IC RF/IF AMPL SINGLE 4 PIN U-WAVE-PILL	01542	MSA-0686
U69	1820-5945	1	IC GATE CMOS/AC NAND QUAD 2-INP	36633	MC74AC00D
U71	1820-5937	1	IC FF CMOS/AC D-TYPE POS-EDGE-TRIG	02237	74AC74SC.
U72	1826-1925	1	IC OP AMP LOW-NOISE SINGLE 8 PIN	03285	OP-27GS
U73	1826-3000	1	IC AUDIO AMPL LOW-NOISE DUAL 8 PIN	03285	OP275GS
U74	1821-2086	1	IC PRESCALER ECL 8-SOIC	02037	MC12026AD
U75	1820-5938	1	IC GATE CMOS/ACT NAND QUAD 2-INP	01698	SN74ACT00D
U76	1820-7218	1	IC CNTR CMOS/AC BIN SYNCHRO	02237	74AC163SCX.
U78	1826-1985	1	ANALOG SWITCH 4 SPST 16 -P-SOIC	05524	DG411DY
U80	1826-1687	1	IC PWR MGT-V-REF-FXD 9.95/10.05V 8 PINS	10858	LT1021DCS8-10
U81	1826-2133	1	IC RF/IF AMPL WB 4 PIN U-WAVE-PILL	01542	MSA-1105
U82	1826-2261	1	IC TEMP XDCR PRCN SINGLE 8 PIN	03406	LM35DM
U83	1826-1810	1	IC OP AMP LOW-BIAS-H-IMPD SINGLE 8 PIN	01698	TL071CD
U84	1821-4614	1	IC GATE CMOS/AHCT EXCL-OR 2-INP	01698	SN74AHCT1G86D BV

 **Indicates factory-selected value*

Agilent Part Number E4401-60100
1.5 GHz RF (75 Ohm)

Reference Designator	Agilent Part Number	Qty	Description	Mgr Code	Mfr Part Number
U85	1821-4614	1	IC GATE CMOS/AHCT EXCL-OR 2-INP	01698	SN74AHCT1G86D BV
Y1	0410-0405	1	PRECISION BULK MODE-AT CRYSTAL QUARTZ	04458	BK3-1B-10MHZ
Z1	0955-0986	1	U-WAVE MIXER 2.43 GHZ MAX	02739	CRMS-24MH-1
Z10	0955-0951	1	TUN-SCR-ASSY TUNING SCREW ASSEMBLY FOR	05505	6925-4
Z11	0955-0951	1	TUN-SCR-ASSY TUNING SCREW ASSEMBLY FOR	05505	6925-4
Z12	0955-0951	1	TUN-SCR-ASSY TUNING SCREW ASSEMBLY FOR	05505	6925-4
Z13	0955-0951	1	TUN-SCR-ASSY TUNING SCREW ASSEMBLY FOR	05505	6925-4
Z14	0955-0951	1	TUN-SCR-ASSY TUNING SCREW ASSEMBLY FOR	05505	6925-4

5300

SYM	REVISIONS		APPROVED	DATE
A	AS ISSUED	TM	J. DETWEILER/	1-14-99
B	PER PCO 52-13635	/WW	T. OHLSEN/	04-30-99

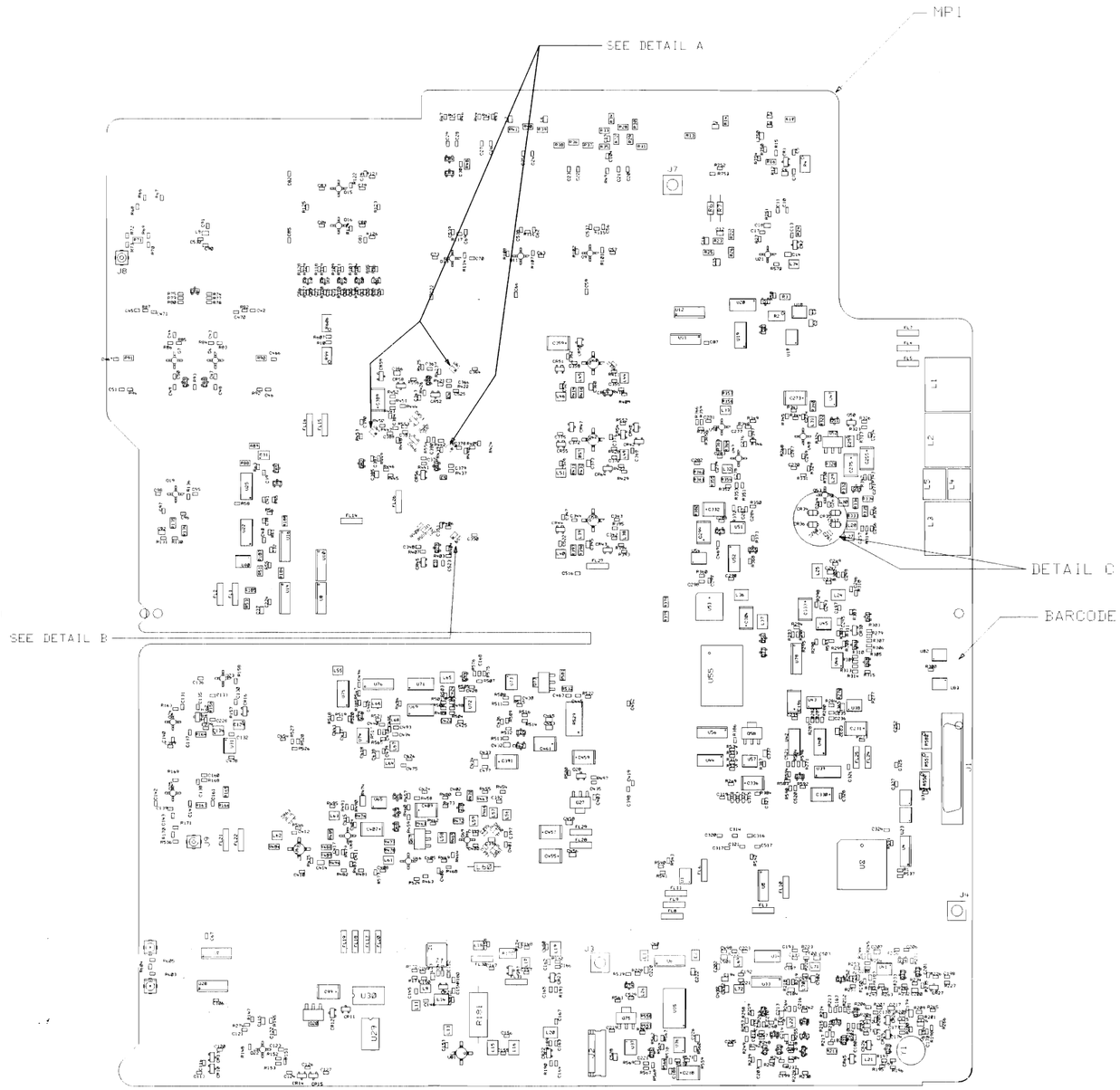

(TOP SIDE)

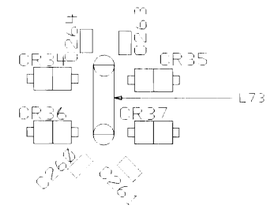

DETAIL C
SCALE NONE

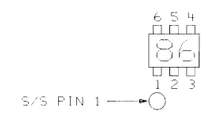

DETAIL A
U61 U63 U64
NOTE2

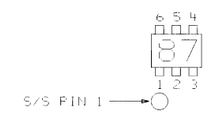

DETAIL B
U59
NOTE3

NOTE: (UNLESS OTHERWISE NOTED)

1 USE RAW BOARD E4401-20100
2 INSTALL U61,U63,U64 WITH MARKING (86) AND SILKSCREEN DOT AS SHOWN
3 INSTALL U59 WITH MARKING (87) AND SILKSCREEN DOT AS SHOWN
4 PART NUMBER 9135-0461 (FL1-31) MUST NOT BE EXPOSED TO HALIDE CONTAINING ACID FLUXES.

FOR MATERIAL LIST SEE E4401-60100

HP RESTRICTED
THIS DOCUMENT CONTAINS CONFIDENTIAL, PROPRIETARY INFORMATION THAT IS HEWLETT-PACKARD (HP) PROPERTY. DO NOT DISCLOSE TO OR DUPLICATE FOR OTHERS EXCEPT AS AUTHORIZED BY HP.

UNLESS OTHERWISE SPECIFIED, DIMENSIONS ARE IN INCHES.	R ODA/ DRAWN BY	DATE	ASSEMBLY, PWB Mosquito RF 75 OHM RF BOARD 75 Ohms TITLE
TOLERANCES: XX.XXX ±.010 XX.XX ±.02	JEFF DETWEILER ENGINEER/CHECKER	DATE	
THIRD ANGLE PROJECTION	RELEASE TO PROD.	DATE	
DO NOT SCALE THIS DRAWING	SUPERSEDES DWG.		

a1bea100 FILENAME	HEWLETT PACKARD
SCALE NONE	
SHEET 1 OF 1	E4401-60100 PART NUMBER
D-E4401-60100-2	

5300

SYM	REVISIONS	APPROVED	DATE
	SEE SHEET 1		6-2-97

SOLDER RELAY K1 THRU K7 TO PC BOARD
IN AREA WHERE SOLDERMASK IS RELIEVED.
SOLDER MASK IS RELIEVED OPPOSITE TAB.
7 PLACES

(BOTTOM SIDE)

HP RESTRICTED
THIS DOCUMENT CONTAINS CONFIDENTIAL, PROPRIETARY INFORMATION THAT IS HEWLETT-PACKARD (HP) PROPERTY. DO NOT DISCLOSE TO OR DUPLICATE FOR OTHERS EXCEPT AS AUTHORIZED BY HP.

UNLESS OTHERWISE SPECIFIED, DIMENSIONS ARE IN INCHES.
TOLERANCES: XX.XXX ±.010, XX.XX ±.02
THIRD ANGLE PROJECTION
DO NOT SCALE THIS DRAWING

R ODA1 DRAWN BY	DATE	ASSEMBLY, PWB Mosquito RF 75 OHM RF BOARD 75 Ohms TITLE
JEFF DETWEILER ENGINEER/CHECKER	DATE	
RELEASE TO PROD.	DATE	
SUPERSEDES DWG.		

aaaaa100 FILENAME
SCALE NONE
SHEET 2 OF 2
HEWLETT PACKARD
E4401-60100 PART NUMBER
D-E4401-60100-2

D-E4401-60100-1

REV	INFORMATION	APPROVED	DATE
A	AS ISSUED /TM		
B	PER PCO 53-13685 /WW		
C	PER PCO 53-13832 /PJW		

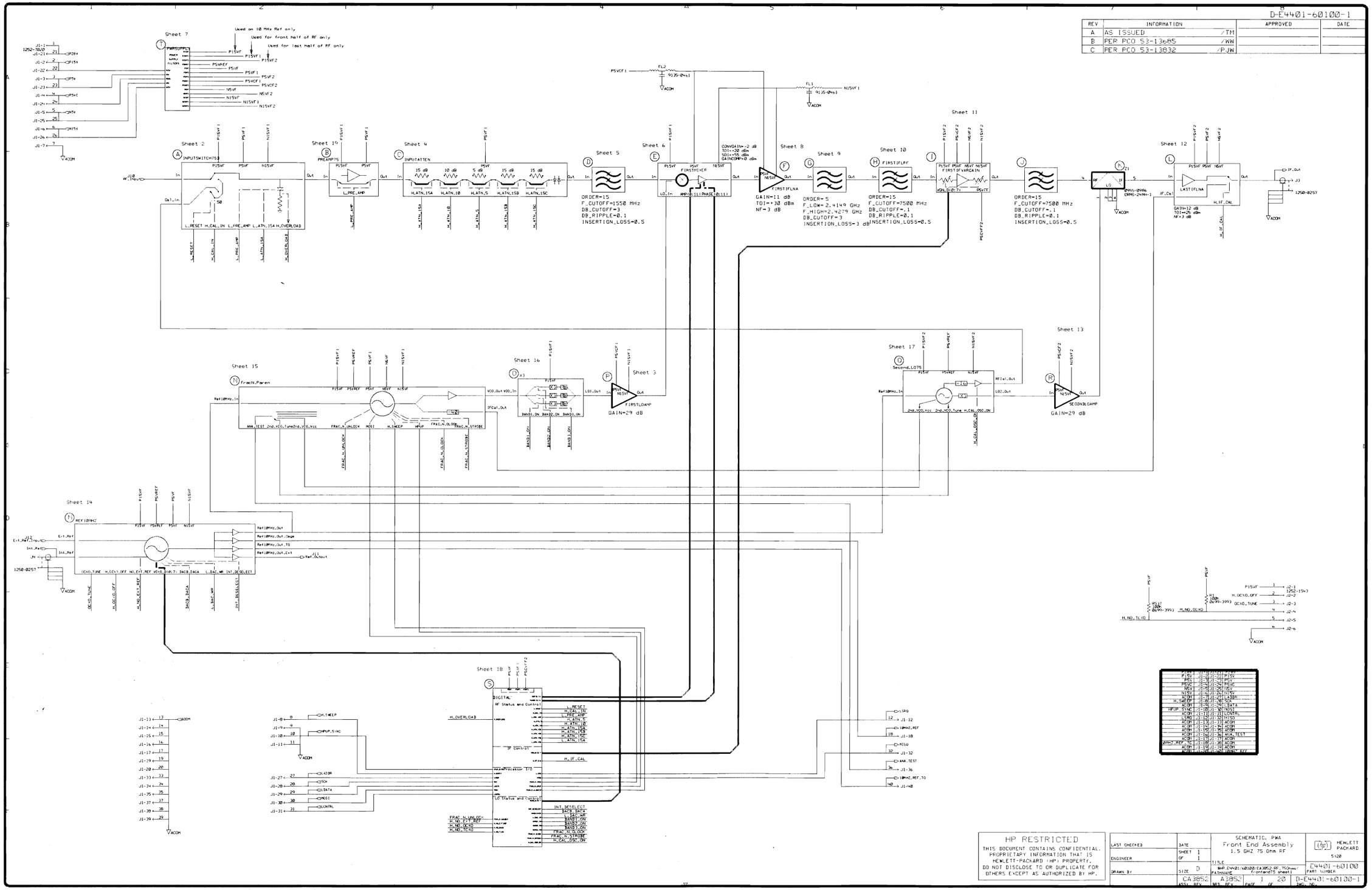

HP RESTRICTED

THIS DOCUMENT CONTAINS CONFIDENTIAL, PROPRIETARY INFORMATION THAT IS HEWLETT-PACKARD (HP) PROPERTY. DO NOT DISCLOSE TO OR DUPLICATE FOR OTHERS EXCEPT AS AUTHORIZED BY HP.

LAST CHECKED	DATE	SCHEMATIC, PWA Front End Assembly 1.5 GHZ 75 Ohm RF	HEWLETT PACKARD 5120
ENGINEER	SHEET 1 OF 1	TITLE	
DRAWN BY	SIZE D	BHP:E4401:60100:CA3852:RF_75Ohm/ PATHNAME frontend75.sheet1	E4401-60100 PART NUMBER
	CA3852 ASSY. REV	A3852 1 20 SHEET REV PAGE OF	D-E4401-60100-1 DWG. NO.

REVISIONS
SEE PAGE 1 FOR REVISION HISTORY

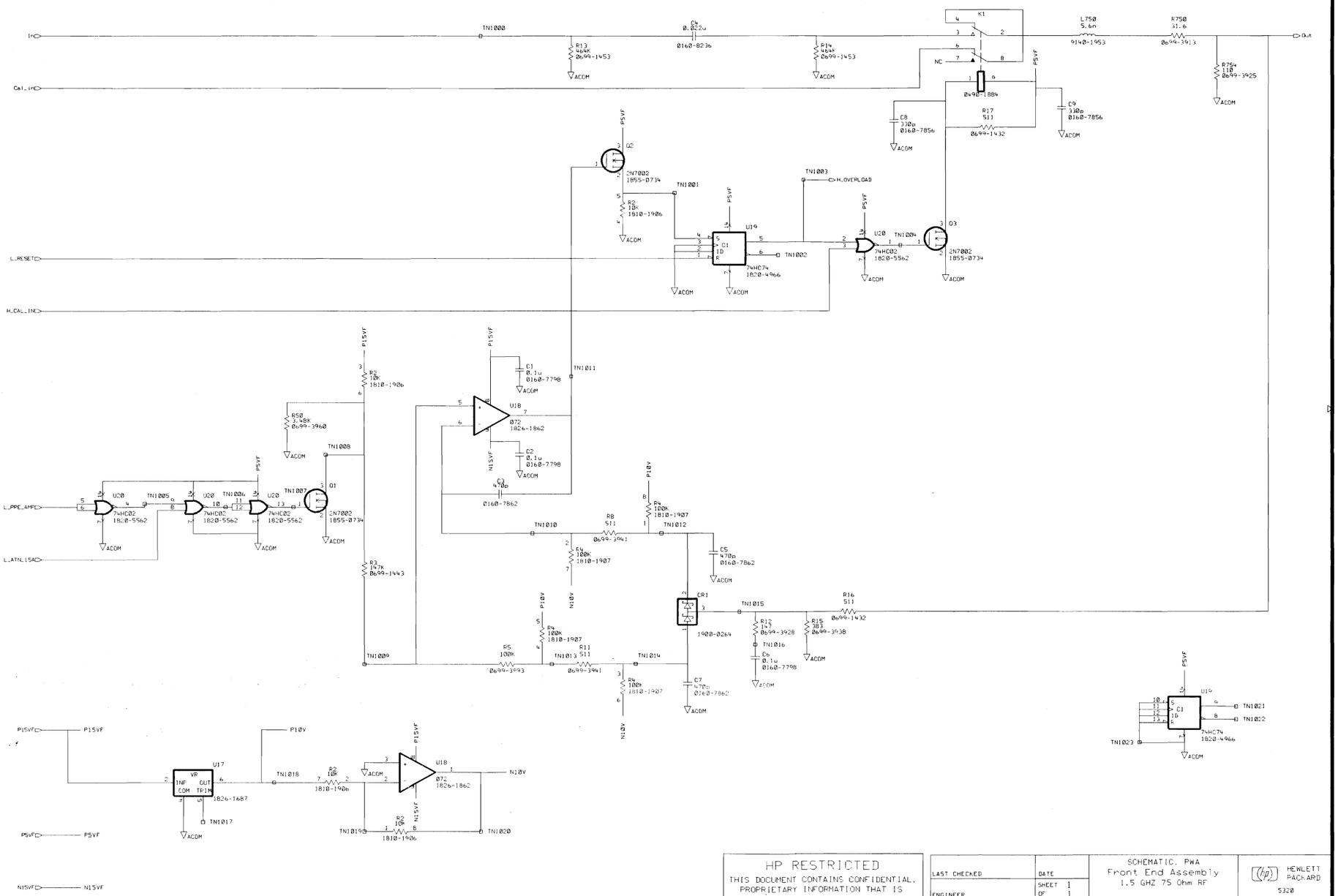

HP RESTRICTED

THIS DOCUMENT CONTAINS CONFIDENTIAL. PROPRIETARY INFORMATION THAT IS HEWLETT-PACKARD (HP) PROPERTY. DO NOT DISCLOSE TO OR DUPLICATE FOR OTHERS EXCEPT AS AUTHORIZED BY HP.

LAST CHECKED	DATE	SCHEMATIC, PWA Front End Assembly 1.5 GHZ 75 Ohm RF	HEWLETT PACKARD 5320
ENGINEER	SHEET 1 OF 1	TITLE	E4401-60100 PART NUMBER
DRAWN BY	SIZE C	$HP_E4401/60100/CA3852/RF_75Ohms/Inputswitch75b sheet1 PATHNAME	
	CA3852 ASSY. REV.	A3852 BRD. REV.	2 OF 20 PAGE
			C-E4401-60100-1 DWG. NO.

REVISIONS
SEE PAGE 1 FOR REVISION HISTORY

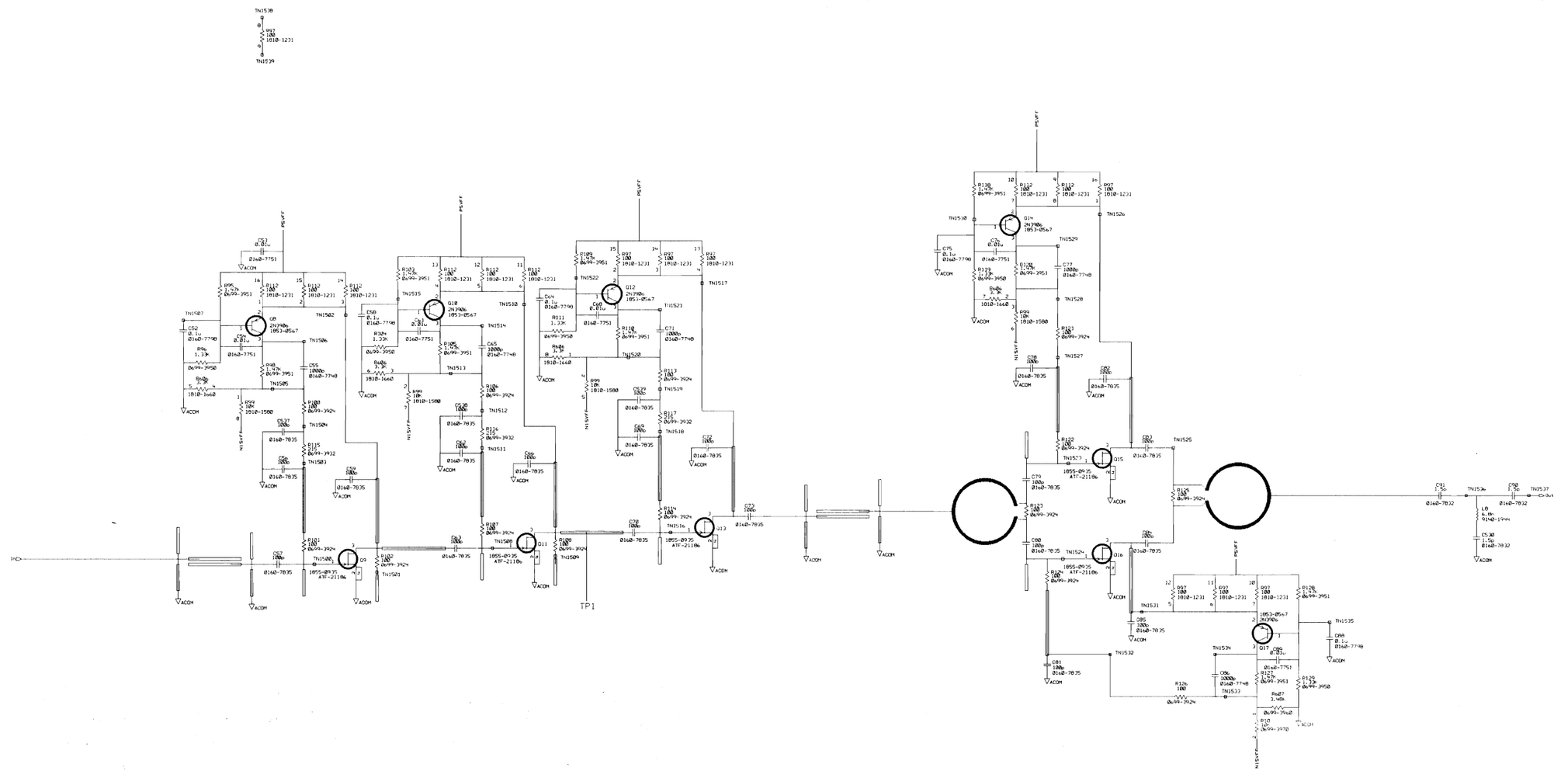

HP RESTRICTED

THIS DOCUMENT CONTAINS CONFIDENTIAL, PROPRIETARY INFORMATION THAT IS HEWLETT-PACKARD (HP) PROPERTY. DO NOT DISCLOSE TO OR DUPLICATE FOR OTHERS EXCEPT AS AUTHORIZED BY HP.

LAST CHECKED	DATE	SCHEMATIC, PWA Front End Assembly 1.5 GHZ 75 Ohm RF	HEWLETT PACKARD 5120
ENGINEER	SHEET 1 OF 1	TITLE	
DRAWN BY	SIZE D	B:E_CW01:\@100:CA3852:/frontend75/	E4401-60100
	CA3852	A3852 3 20	D-E4401-60100-1
ASSY REV	DRA REV	PAGE OF	DWG NO

REVISIONS
SEE PAGE 1 FOR REVISION HISTORY

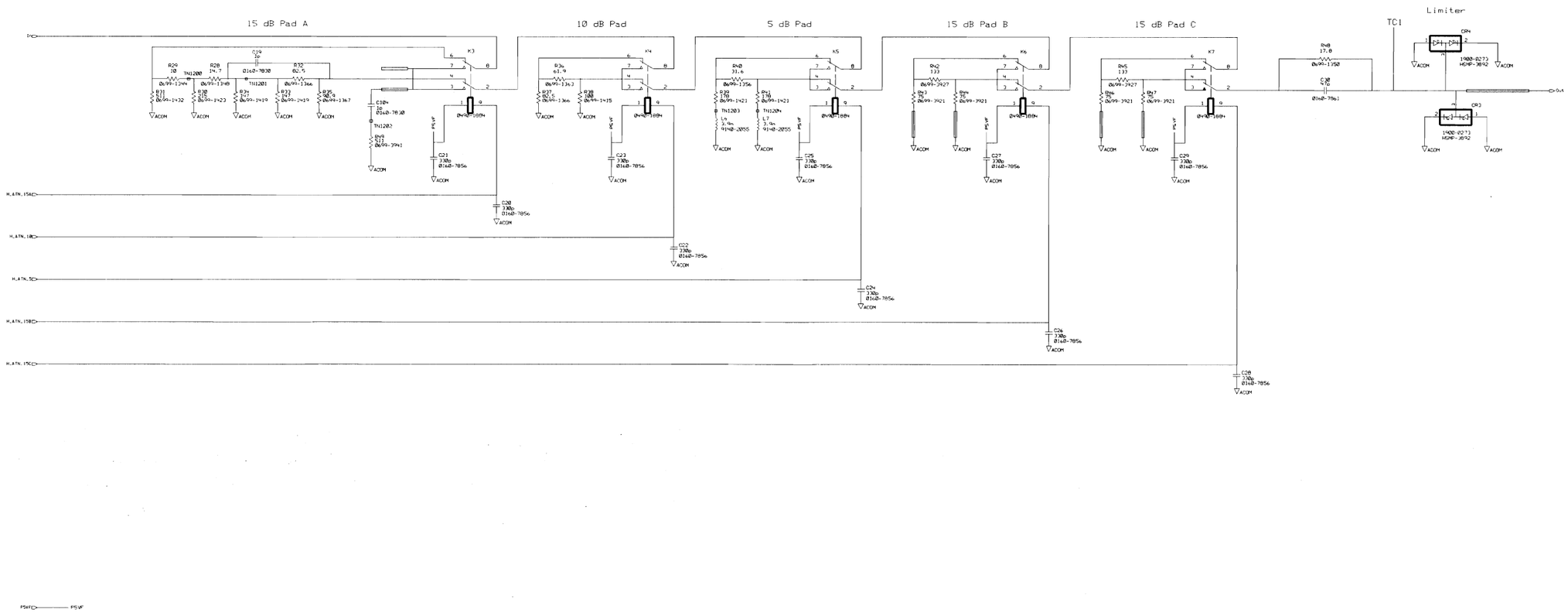

HP RESTRICTED
THIS DOCUMENT CONTAINS CONFIDENTIAL, PROPRIETARY INFORMATION THAT IS HEWLETT-PACKARD (HP) PROPERTY. DO NOT DISCLOSE TO OR DUPLICATE FOR OTHERS EXCEPT AS AUTHORIZED BY HP.

LAST CHECKED	DATE	SCHEMATIC, PWA Front End Assembly 1.5 GHZ 75 Ohm RF	HEWLETT PACKARD 5120
ENGINEER	SHEET 1 OF 1	TITLE	
DRAWN BY	SIZE D		E4401-60100
	CA3852 ASSY. REV.	A3852 MDL. REV.	4 20 PAGE OF D-E4401-60100-1 DWG. NO.

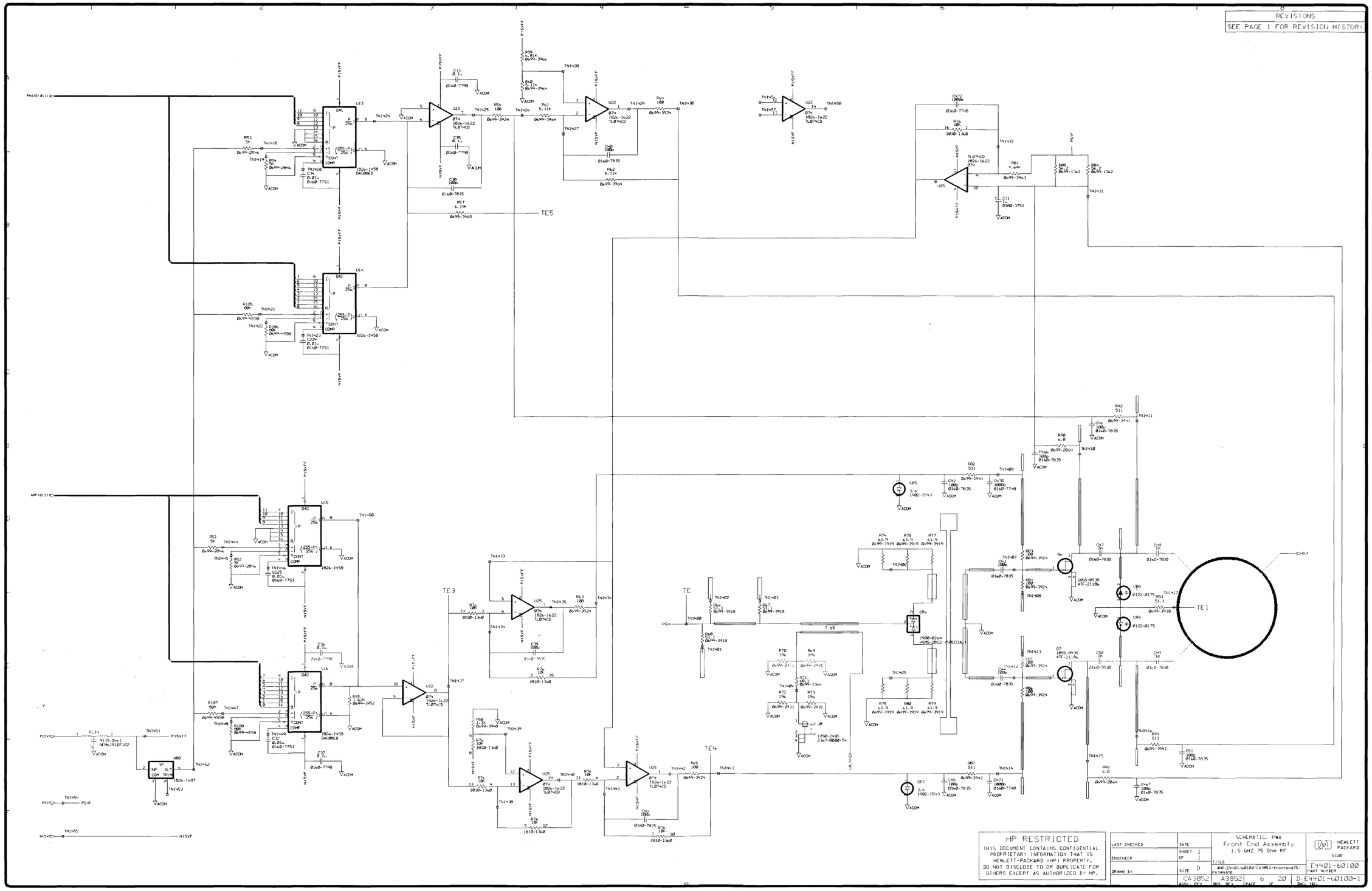
REVISIONS
SEE PAGE 1 FOR REVISION HISTORY
TE5
TE3
TE4
TE
TE1
HP RESTRICTED
THIS DOCUMENT CONTAINS CONFIDENTIAL, PROPRIETARY INFORMATION THAT IS HEWLETT-PACKARD (HP) PROPERTY. DO NOT DISCLOSE TO OR DUPLICATE FOR OTHERS EXCEPT AS AUTHORIZED BY HP.
LAST CHECKED
ENGINEER
DRAWN BY
DATE
SHEET 1 OF 1
SIZE D
SCHEMATIC, PWA
Front End Assembly
1.5 GHZ 75 Ohm RF
HEWLETT PACKARD
5120
E4401-60100
PART NUMBER
CA3852
A3852
6
20
D-E4401-60100-1

REVISIONS
SEE PAGE 1 FOR REVISION HISTORY

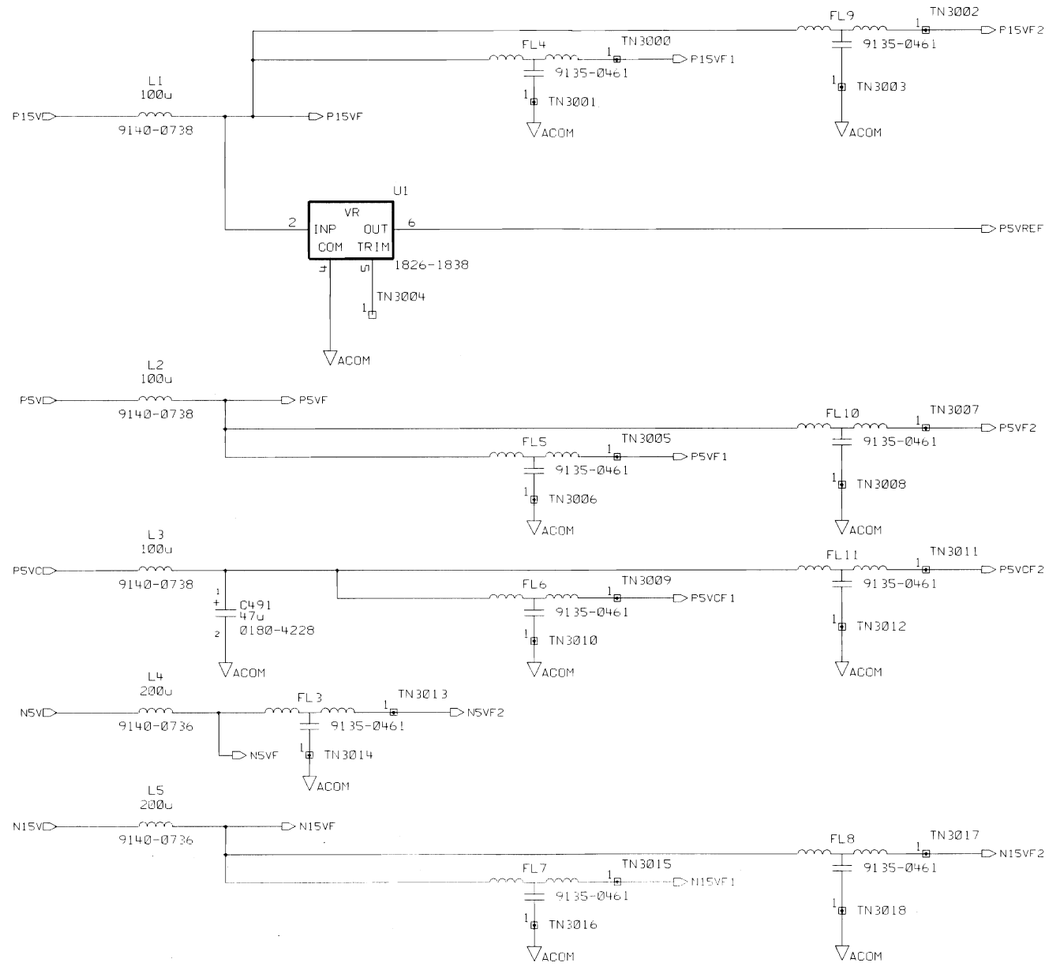

HP RESTRICTED

THIS DOCUMENT CONTAINS CONFIDENTIAL. PROPRIETARY INFORMATION THAT IS HEWLETT-PACKARD (HP) PROPERTY. DO NOT DISCLOSE TO OR DUPLICATE FOR OTHERS EXCEPT AS AUTHORIZED BY HP.

LAST CHECKED	DATE	SCHEMATIC. PWA Front End Assembly 1.5 GHZ 75 Ohm RF	HEWLETT PACKARD 5320
ENGINEER	SHEET 1 OF 1	TITLE	
DRAWN BY	SIZE B	$HP_E4401/60100/CA3852/frontend75/ PATHNAME	E4401-60100 PART NUMBER
	CA3852 ASSY. REV	A3852 BRD. REV	PAGE 7 OF 20	B-E4401-60100-1 DWG. NO.

REVISIONS
SEE PAGE 1 FOR REVISION HISTORY

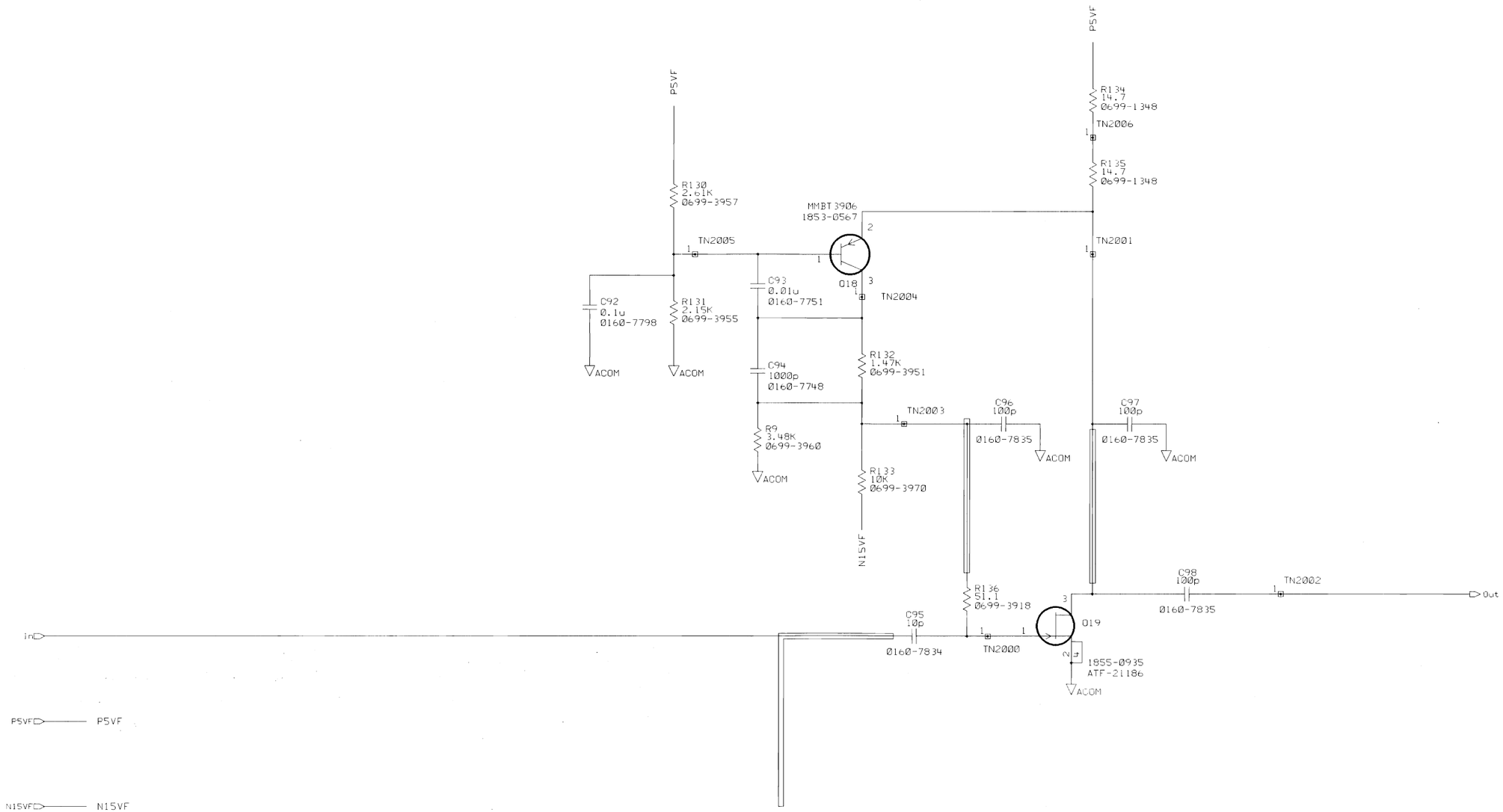

HP RESTRICTED

THIS DOCUMENT CONTAINS CONFIDENTIAL. PROPRIETARY INFORMATION THAT IS HEWLETT-PACKARD (HP) PROPERTY. DO NOT DISCLOSE TO OR DUPLICATE FOR OTHERS EXCEPT AS AUTHORIZED BY HP.

LAST CHECKED	DATE	SCHEMATIC. PWA Front End Assembly 1.5 GHZ 75 Ohm RF	HEWLETT PACKARD 5320
ENGINEER	SHEET 1 OF 1	TITLE	
DRAWN BY	SIZE B	$HP_E4401/60100/CA3852/frontend75/ PATHNAME	E4401-60100 PART NUMBER
	CA3852 ASSY. REV	A3852 BRD. REV PAGE 8 OF 20	B-E4401-60100-1 DWG. NO.

REVISIONS
SEE PAGE 1 FOR REVISION HISTORY

OSMT Connectors can be added for testing
The resistors that make up pad should be removed

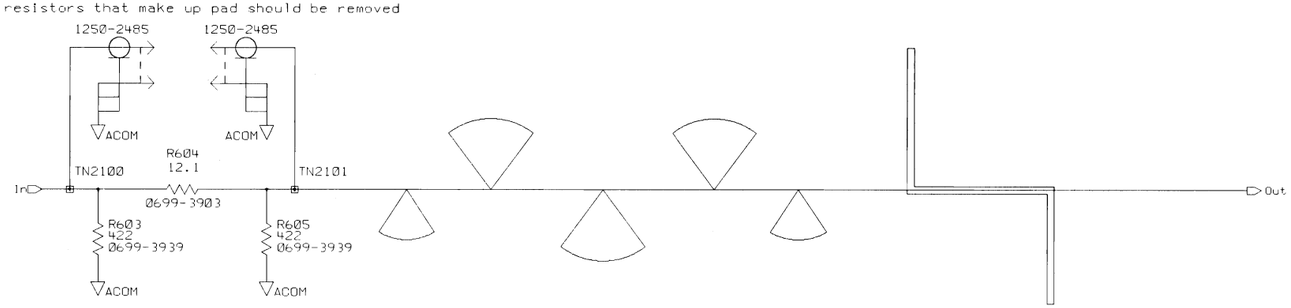

HP RESTRICTED

THIS DOCUMENT CONTAINS CONFIDENTIAL. PROPRIETARY INFORMATION THAT IS HEWLETT-PACKARD (HP) PROPERTY. DO NOT DISCLOSE TO OR DUPLICATE FOR OTHERS EXCEPT AS AUTHORIZED BY HP.

LAST CHECKED	DATE	SCHEMATIC, PWA Front End Assembly 1.5 GHZ 75 Ohm RF	HEWLETT PACKARD 5320
ENGINEER	SHEET 1 OF 1	TITLE	
DRAWN BY	SIZE B	$HP_E4401/60100/CA3852/frontend75/ PATHNAME	E4401-60100 PART NUMBER
	CA3852 ASSY. REV	A3852 BRD. REV	10 20 PAGE OF	B-E4401-60100-1 DWG. NO.

REVISIONS
SEE PAGE 1 FOR REVISION HISTORY

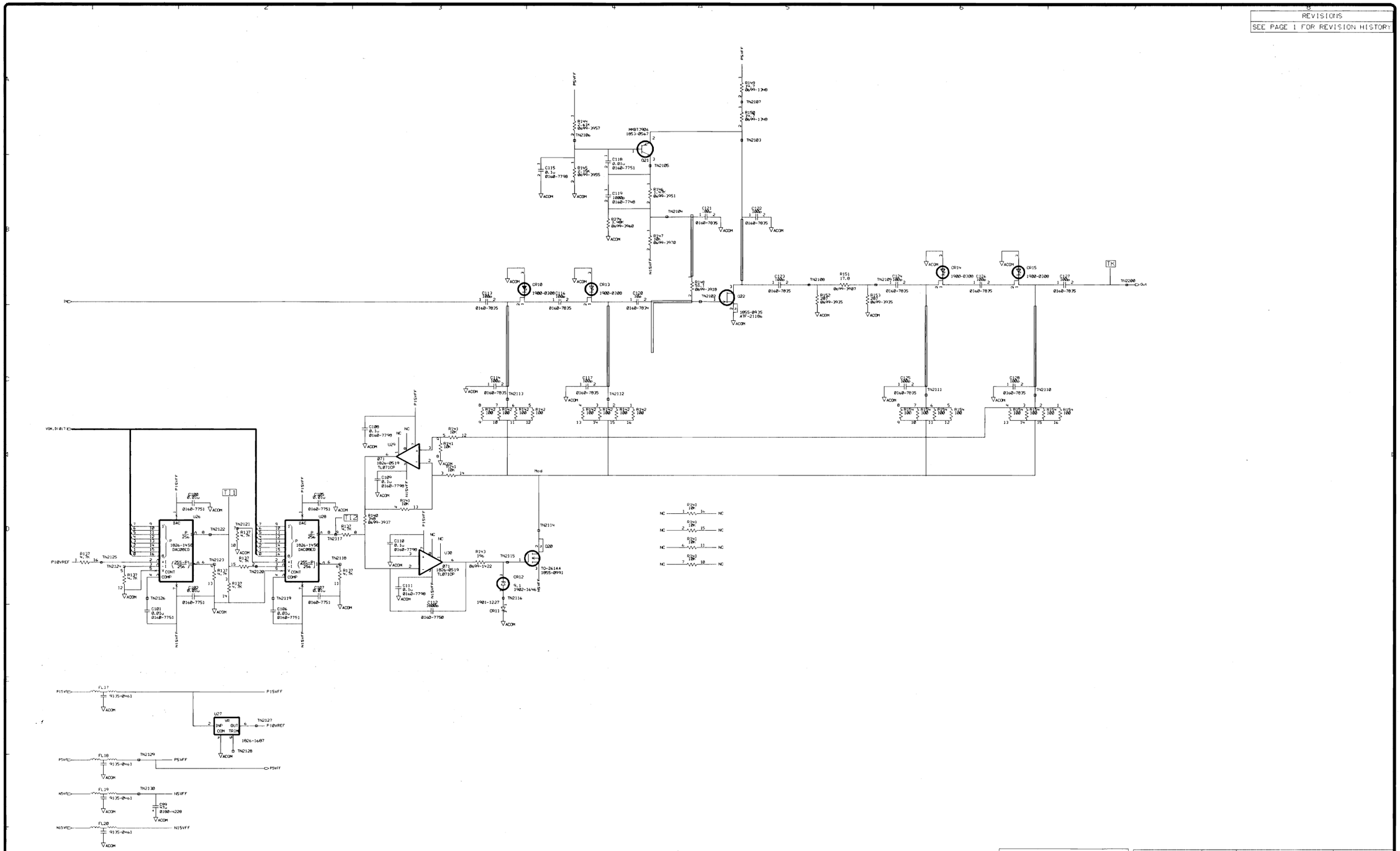

HP RESTRICTED

THIS DOCUMENT CONTAINS CONFIDENTIAL, PROPRIETARY INFORMATION THAT IS HEWLETT-PACKARD (HP) PROPERTY. DO NOT DISCLOSE TO OR DUPLICATE FOR OTHERS EXCEPT AS AUTHORIZED BY HP.

LAST CHECKED	DATE	SCHEMATIC, PWA Front End Assembly 1.5 GHZ 75 Ohm RF	HEWLETT PACKARD 5120
ENGINEER	SHEET 1 OF 1	TITLE	
DRAWN BY	SIZE D	SHP_E4401/60100/CA3852/frontend75/ PATHNAME	E4401-60100 PART NUMBER
	CA3852 ASSY REV	A3852 MAIN REV	11 OF 20 | D-E4401-60100-1 DRW NO

REVISIONS
SEE PAGE 1 FOR REVISION HISTORY

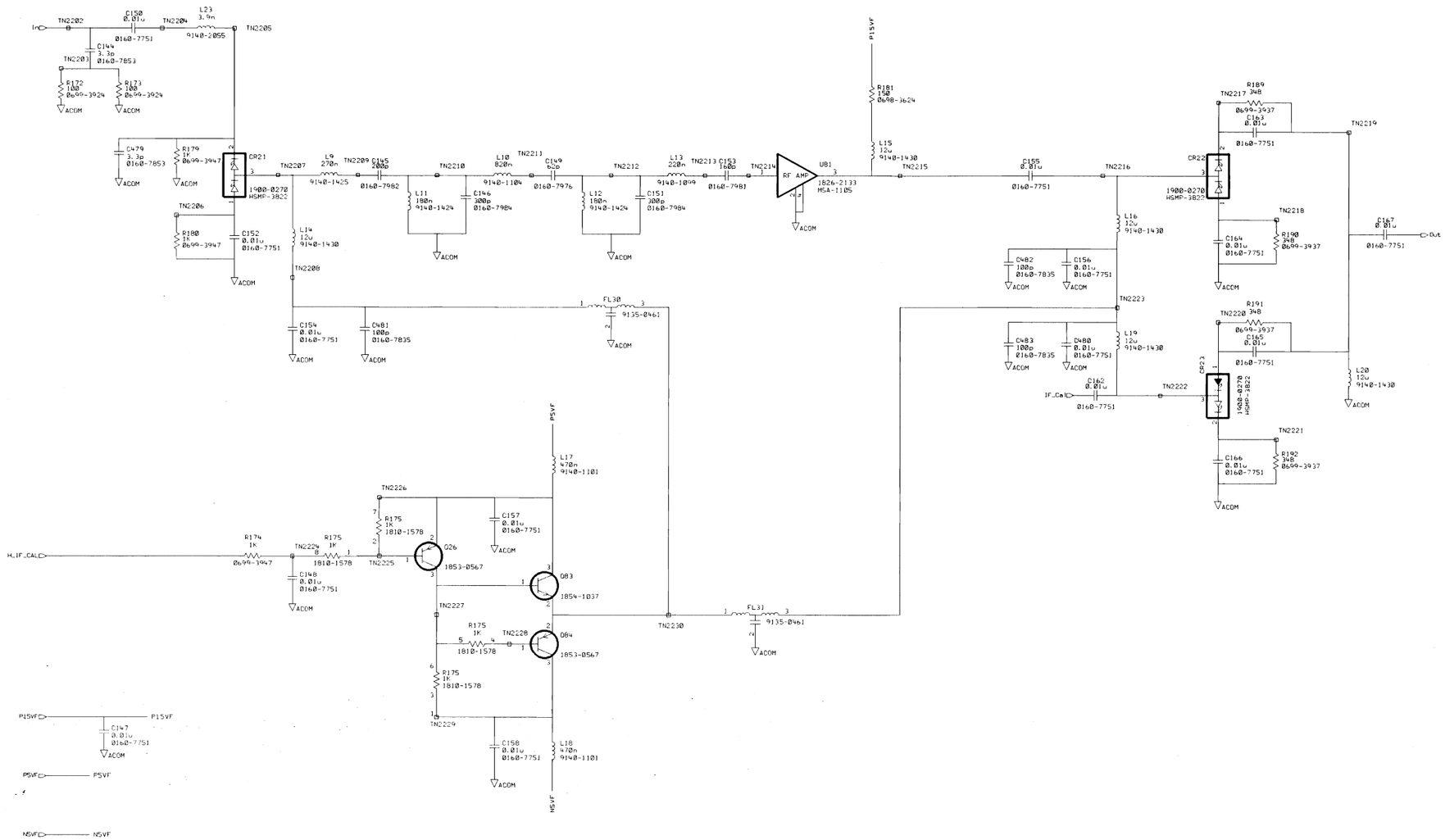

HP RESTRICTED

THIS DOCUMENT CONTAINS CONFIDENTIAL. PROPRIETARY INFORMATION THAT IS HEWLETT-PACKARD (HP) PROPERTY. DO NOT DISCLOSE TO OR DUPLICATE FOR OTHERS EXCEPT AS AUTHORIZED BY HP.

LAST CHECKED	DATE	SCHEMATIC. PWA Front End Assembly 1.5 GHZ 75 Ohm RF	HEWLETT PACKARD 5320
ENGINEER	SHEET 1 OF 1	TITLE	
DRAWN BY	SIZE C	$HP_E4401/60100/CA3852/frontend75/ PATHNAME	E4401-60100 PART NUMBER
	CA3852 ASSY. REV	A3852 BRD. REV PAGE 12 OF 20	C-E4401-60100-1 DWG. NO.

REVISIONS
SEE PAGE 1 FOR REVISION HISTORY

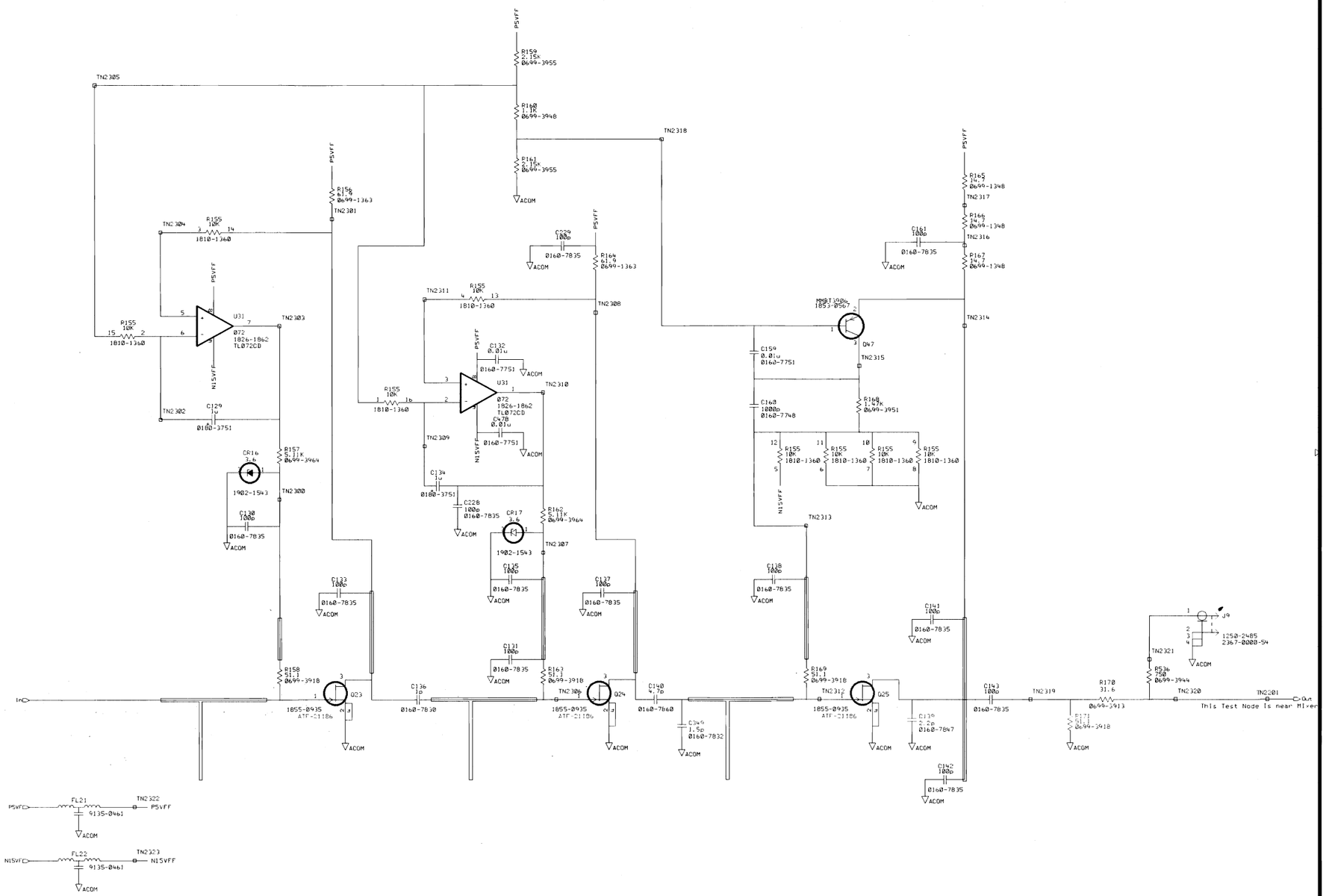

HP RESTRICTED

THIS DOCUMENT CONTAINS CONFIDENTIAL, PROPRIETARY INFORMATION THAT IS HEWLETT-PACKARD (HP) PROPERTY. DO NOT DISCLOSE TO OR DUPLICATE FOR OTHERS EXCEPT AS AUTHORIZED BY HP.

LAST CHECKED	DATE	SCHEMATIC, PWA Front End Assembly 1.5 GHZ 75 Ohm RF	HEWLETT PACKARD 5320
ENGINEER	SHEET 1 OF 1	TITLE	E4401-60100 PART NUMBER
DRAWN BY	SIZE C	HP_E4401/60100/CA3852/frontend75/ PATHNAME	
	CA3852 ASSY. REV	A3852 BRD. REV	13 OF 20 PAGE
			C-E4401-60100-1 DWG. NO.

(M) 10 MHz REFERENCE

REVISIONS
SEE PAGE 1 FOR REVISION HISTORY

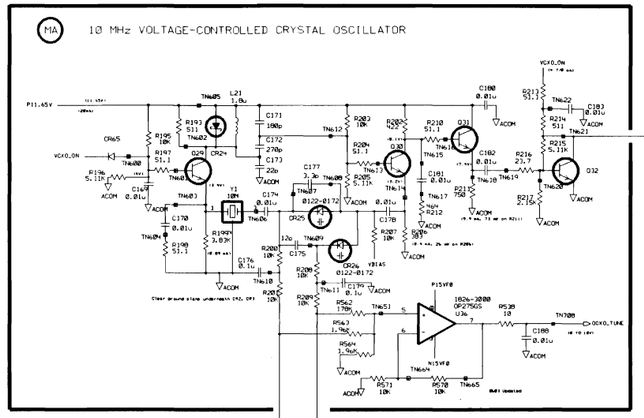

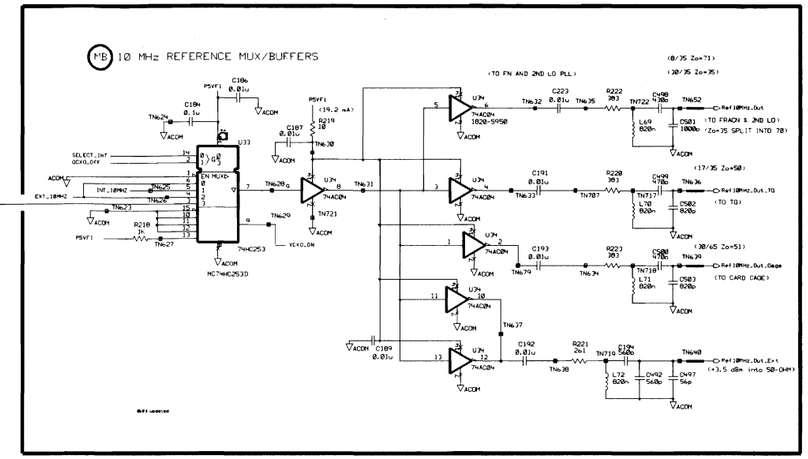

INT_DESELECT (OCXO_OFF)	NO_EXT_REF (SELECT_INT)	REF SELECTED
0	0	EXT REF
0	1	OCXO/TCXO
1	0	EXT REF
1	1	VCXO

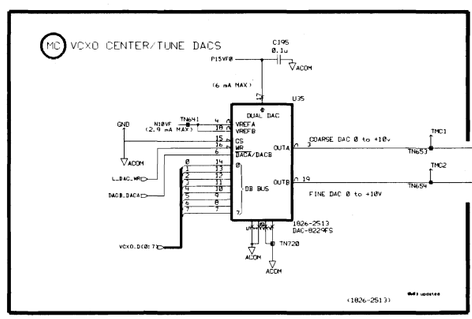

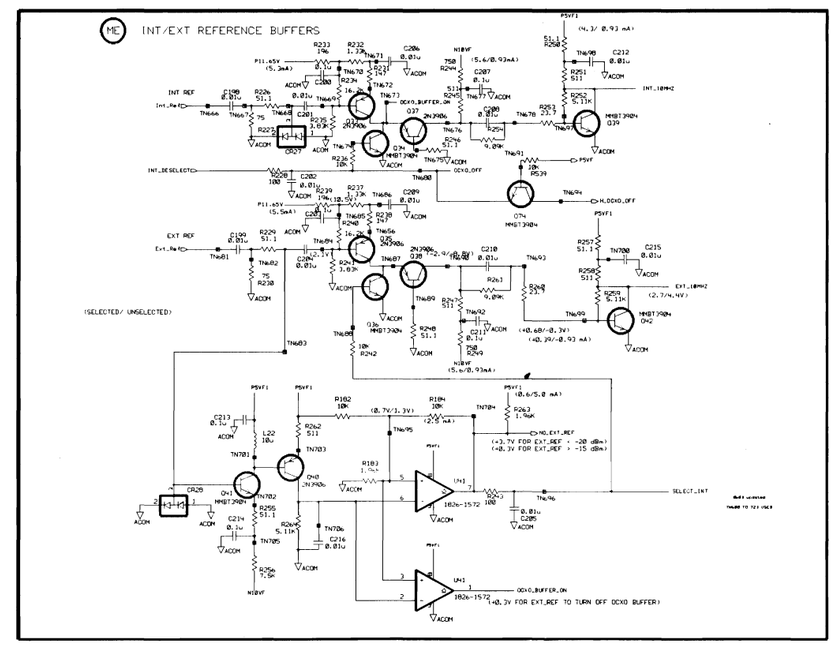

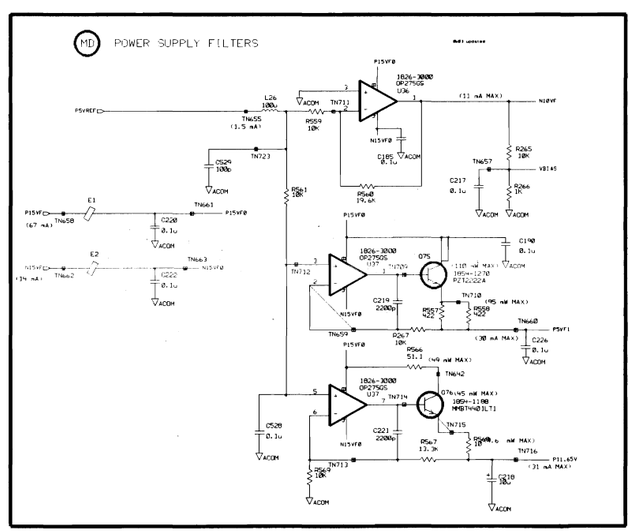

HP RESTRICTED
THIS DOCUMENT CONTAINS CONFIDENTIAL, PROPRIETARY INFORMATION THAT IS HEWLETT-PACKARD (HP) PROPERTY. DO NOT DISCLOSE TO OR DUPLICATE FOR OTHERS EXCEPT AS AUTHORIZED BY HP.

LAST CHECKED	DATE	SCHEMATIC, PWA Front End Assembly 1.5 GHZ 75 Ohm RF	HEWLETT PACKARD 5120
ENGINEER	SHEET 1 OF 1		
DRAWN BY	SIZE D	TITLE: HP_EW=01/s0100/CA3852/frontend75/	E4401-60100
	CA3852	PATHNAME	PART NUMBER
	ASSY. REV. A2952	NEXT REV. PAGE 14 OF 20	D-E4401-60100-1
			DWG. NO.

(N) FRACTIONAL N FIRST LO SYNTHESIZER

REVISIONS
SEE PAGE 1 FOR REVISION HISTORY

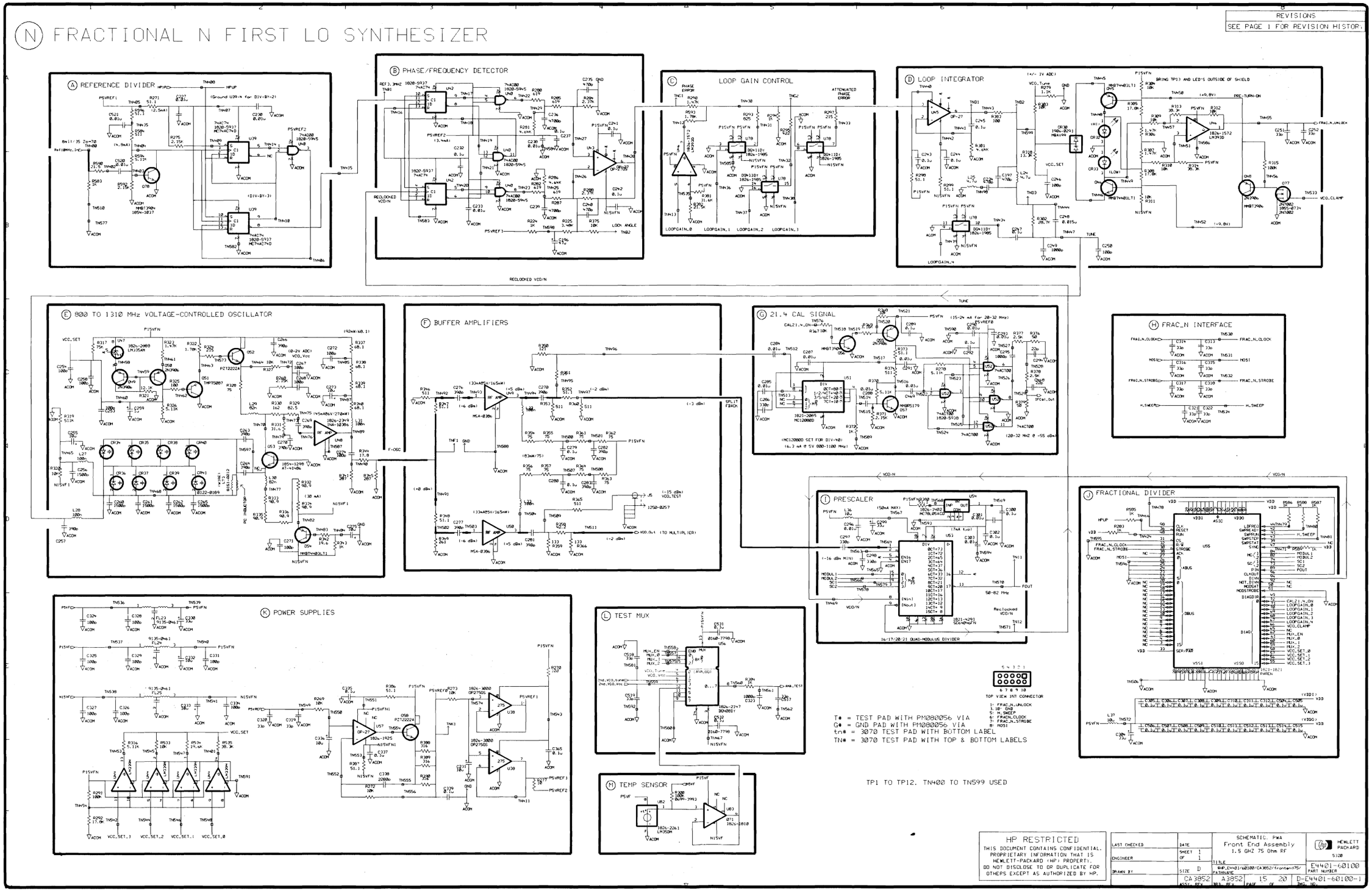

HP RESTRICTED
THIS DOCUMENT CONTAINS CONFIDENTIAL, PROPRIETARY INFORMATION THAT IS HEWLETT-PACKARD (HP) PROPERTY. DO NOT DISCLOSE TO OR DUPLICATE FOR OTHERS EXCEPT AS AUTHORIZED BY HP.

LAST CHECKED	DATE	SCHEMATIC, PWA Front End Assembly 1.5 GHZ 75 Ohm RF
ENGINEER	SHEET 1 OF 1	TITLE B:P_EN=01/60100/CA3852/frontend175/
DRAWN BY	SIZE D	PATHNAME
	CA3852	A3852
	ASSY REV	TEST REV
	PAGE 15 OF 20	

HEWLETT PACKARD
5120

E4401-60100
PART NUMBER

D-E4401-60100-1
DWG NO

REVISIONS
SEE PAGE 1 FOR REVISION HISTORY

(O) FIRST LO MULTIPLIER

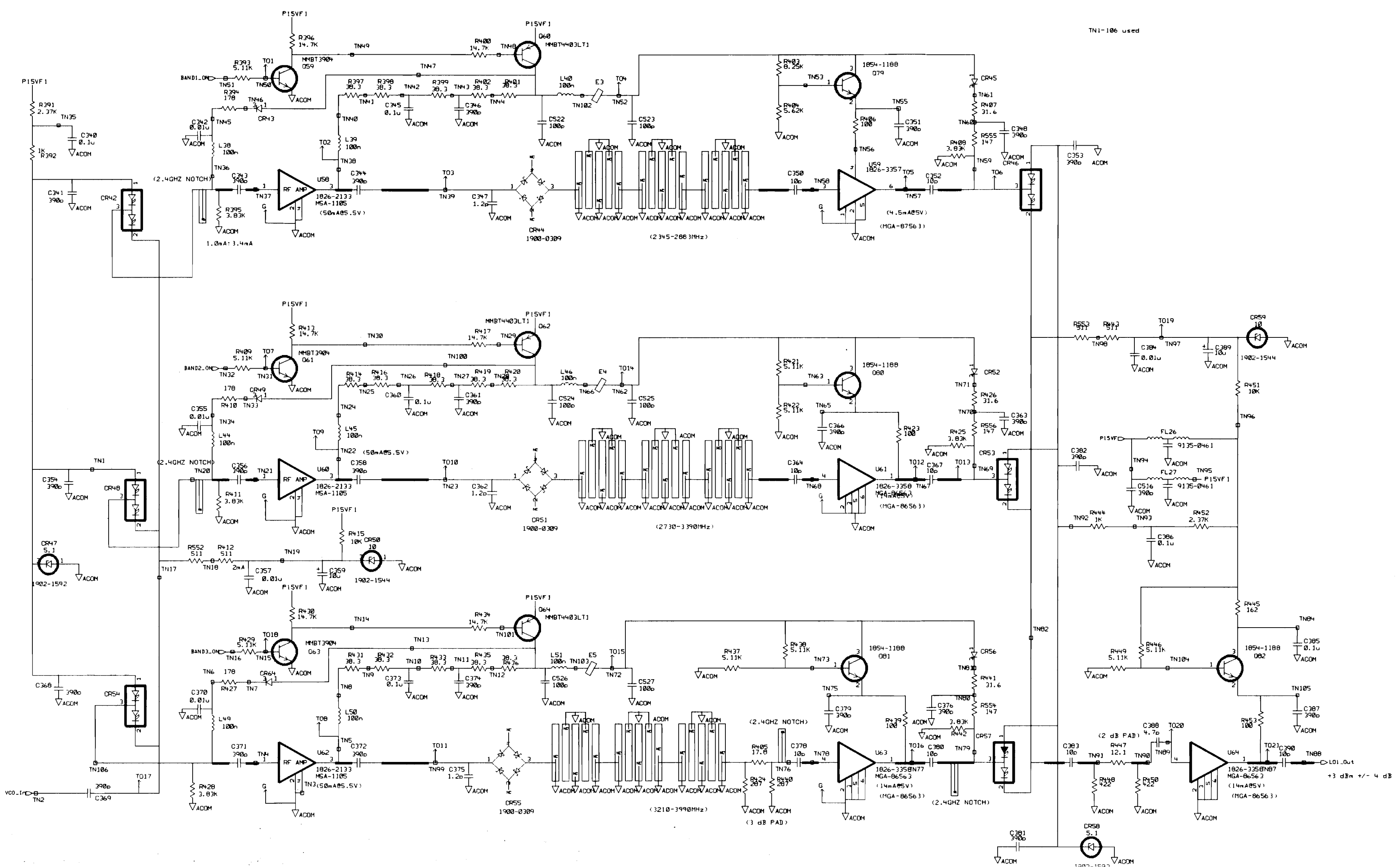

HP RESTRICTED
THIS DOCUMENT CONTAINS CONFIDENTIAL, PROPRIETARY INFORMATION THAT IS HEWLETT-PACKARD (HP) PROPERTY. DO NOT DISCLOSE TO OR DUPLICATE FOR OTHERS EXCEPT AS AUTHORIZED BY HP.

LAST CHECKED	DATE	SCHEMATIC, PWA Front End Assembly 1.5 GHZ 75 Ohm RF	HEWLETT PACKARD 5320
ENGINEER	SHEET 1 OF 1	TITLE	
DRAWN BY	SIZE D	$HP_E4401/60100/CA3852/frontend75/ PATHNAME	E4401-60100 PART NUMBER
	CA3852 ASSY. REV	A3852 BRD. REV	16 OF 20 PAGE	D-E4401-60100-1 DWG. NO.

Q SECOND LO AND 50 MHZ CALIBRATOR
(75-ohm Version)

REVISIONS
SEE PAGE 1 FOR REVISION HISTORY

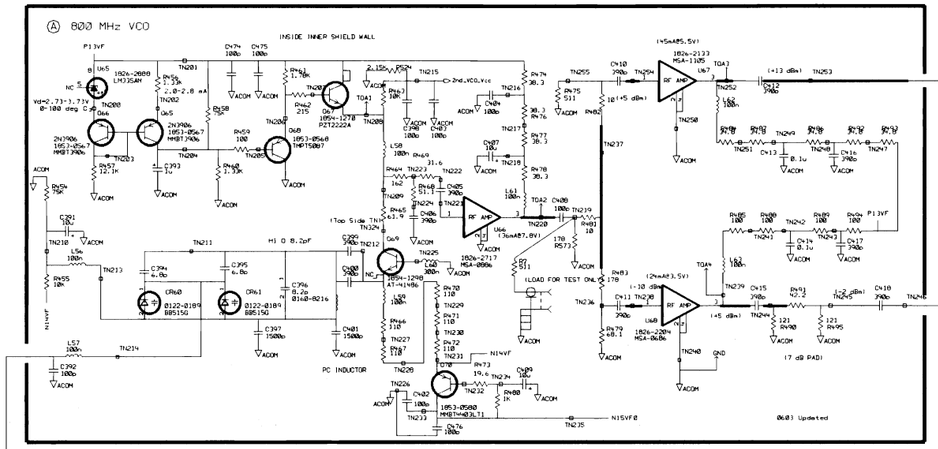

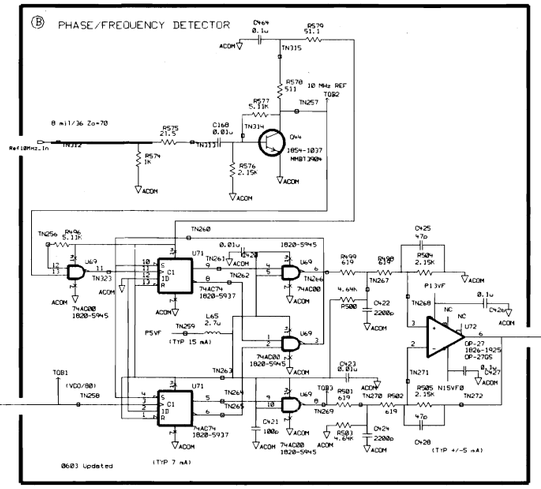

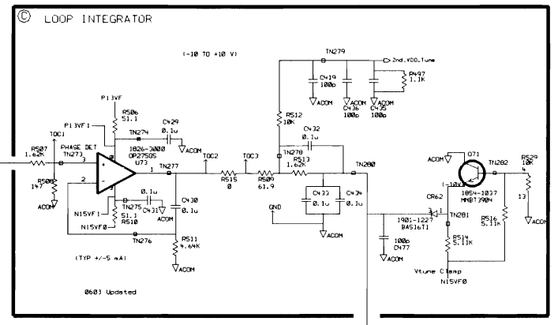

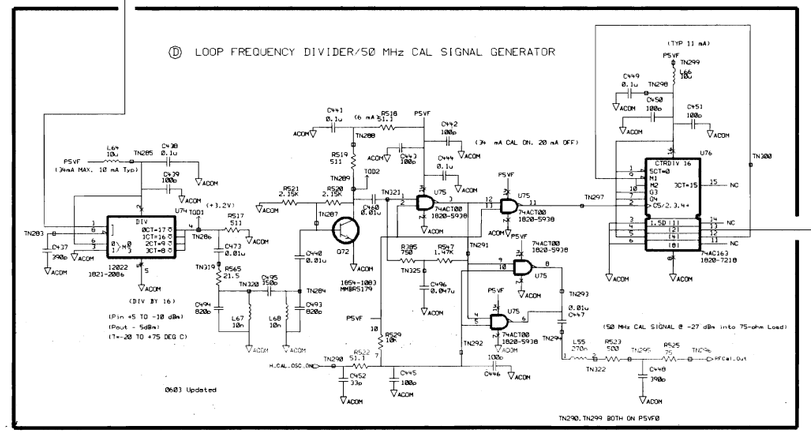

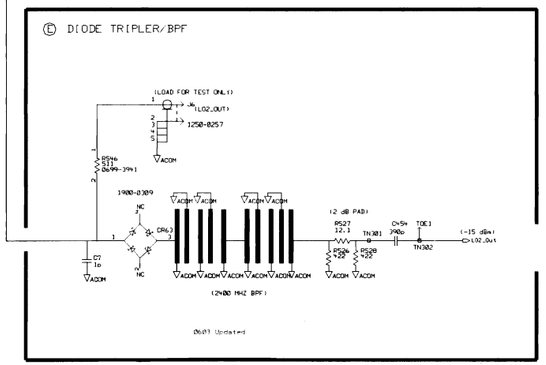

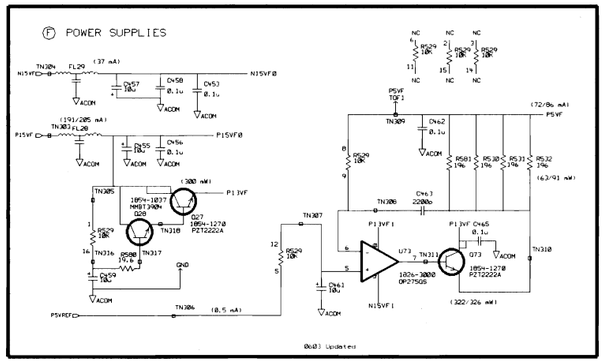

LAST TN325

TP# : PM062040 VIA
GND: PM080056 VIA

HP RESTRICTED
THIS DOCUMENT CONTAINS CONFIDENTIAL, PROPRIETARY INFORMATION THAT IS HEWLETT-PACKARD (HP) PROPERTY. DO NOT DISCLOSE TO OR DUPLICATE FOR OTHERS EXCEPT AS AUTHORIZED BY HP.

LAST CHECKED	DATE	SCHEMATIC, PWA Front End Assembly 1.5 GHZ 75 Ohm RF	HEWLETT PACKARD 5120
ENGINEER	SHEET 1 OF 1	TITLE	E4401-60100
DRAWN BY	SIZE D	PATHNAME HP,E4401/60100/CA3852/frontend75/	PART NUMBER
	CA3852 ASSY. REV	A3852 MBA REV	17 20 PAGE OF	D-E4401-60100-1 DWG. NO.

REVISIONS
SEE PAGE 1 FOR REVISION HISTORY

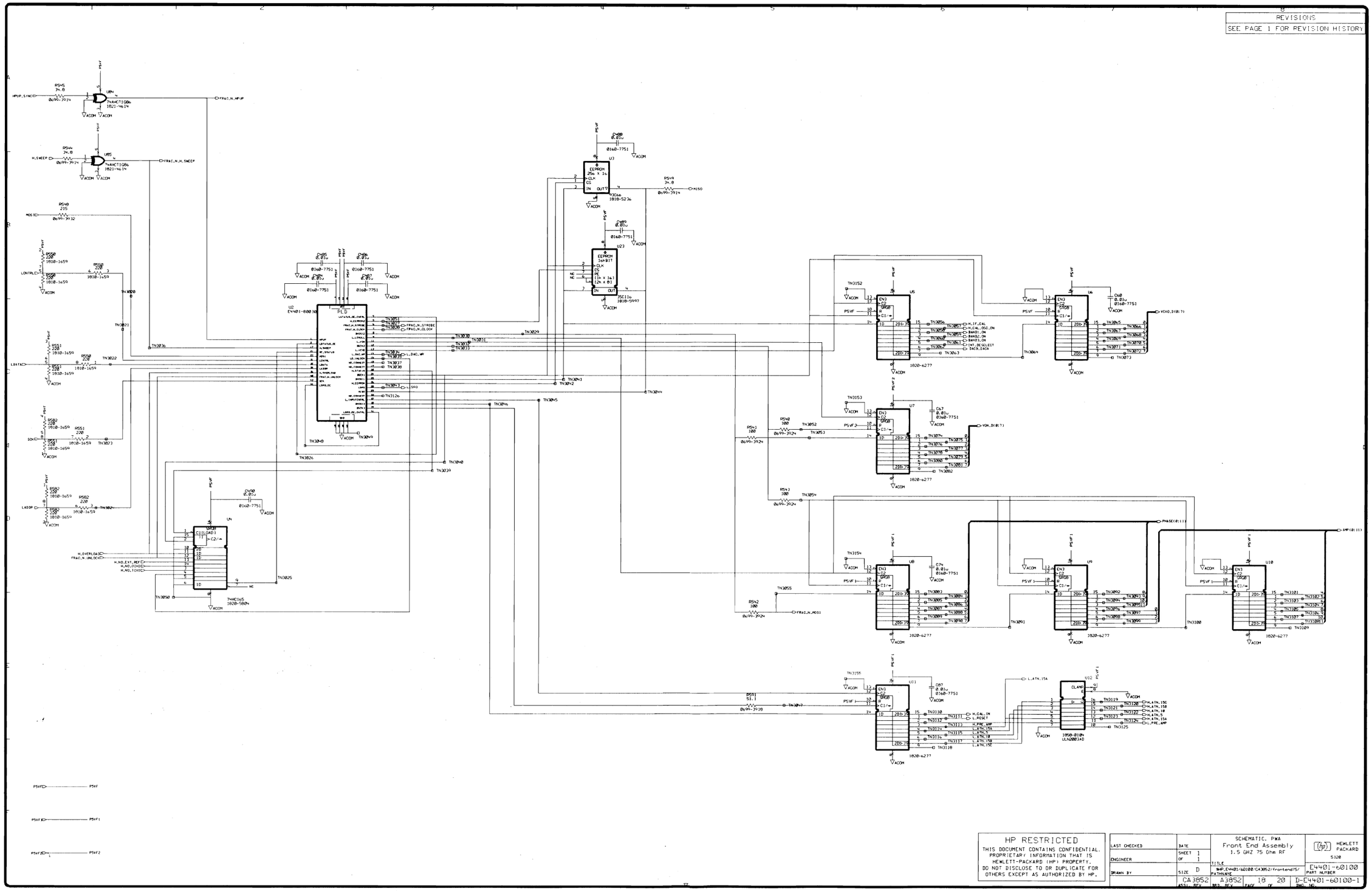

HP RESTRICTED

THIS DOCUMENT CONTAINS CONFIDENTIAL, PROPRIETARY INFORMATION THAT IS HEWLETT-PACKARD (HP) PROPERTY. DO NOT DISCLOSE TO OR DUPLICATE FOR OTHERS EXCEPT AS AUTHORIZED BY HP.

LAST CHECKED	DATE	SCHEMATIC, PWA Front End Assembly 1.5 GHZ 75 Ohm RF
ENGINEER	SHEET 1 OF 1	TITLE
DRAWN BY	SIZE D	WP_E4401/60100/CA3852/frontend75/ PATHNAME
CA 3852	A3852	18 20
ASSY. REV.	MTR. REV.	PAGE OF

HEWLETT PACKARD 5120

E4401-60100

PART NUMBER

D-E4401-60100-1

DWG. NO.

REVISIONS
SEE PAGE 1 FOR REVISION HISTORY

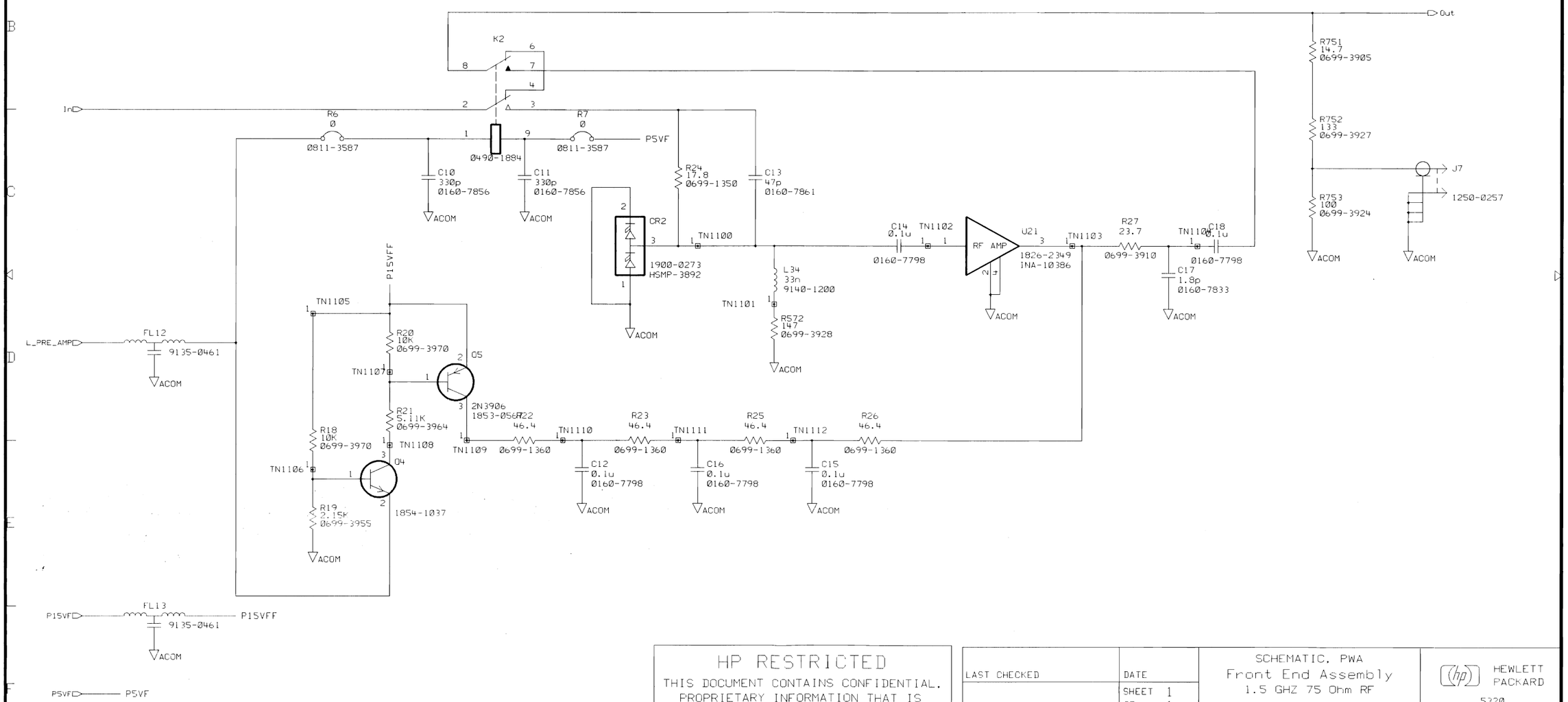

HP RESTRICTED

THIS DOCUMENT CONTAINS CONFIDENTIAL. PROPRIETARY INFORMATION THAT IS HEWLETT-PACKARD (HP) PROPERTY. DO NOT DISCLOSE TO OR DUPLICATE FOR OTHERS EXCEPT AS AUTHORIZED BY HP.

LAST CHECKED	DATE	SCHEMATIC, PWA Front End Assembly 1.5 GHZ 75 Ohm RF	HEWLETT PACKARD 5320
ENGINEER	SHEET 1 OF 1	TITLE	
DRAWN BY	SIZE B	$HP_E4401/60100/CA3852/RF_75Ohms/preamp75 sheet1 PATHNAME	E4401-60100 PART NUMBER
	CA3852 ASSY. REV	A3852 BRD. REV	19 OF 20 PAGE	E-E4401-60100-1 DWG. NO.

REVISIONS
SEE PAGE 1 FOR REVISION HISTORY

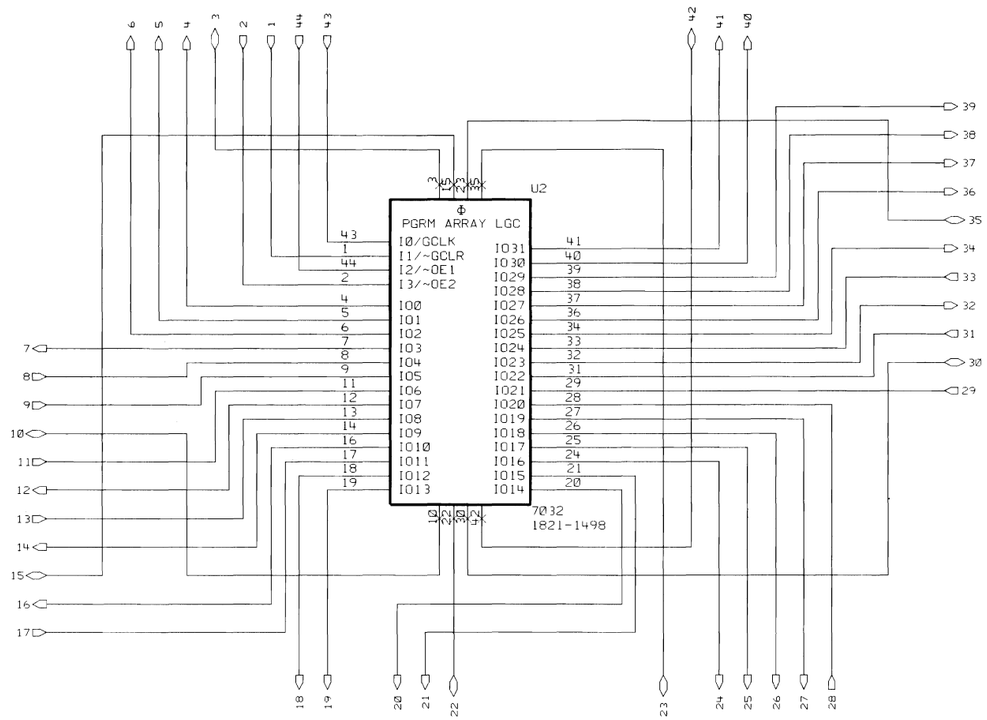

HP RESTRICTED

THIS DOCUMENT CONTAINS CONFIDENTIAL. PROPRIETARY INFORMATION THAT IS HEWLETT-PACKARD (HP) PROPERTY. DO NOT DISCLOSE TO OR DUPLICATE FOR OTHERS EXCEPT AS AUTHORIZED BY HP.

LAST CHECKED	DATE	SCHEMATIC. PWA Front End Assembly 1.5 GHZ 75 Ohm RF	HEWLETT PACKARD 5320
ENGINEER	SHEET 1 OF 1	TITLE	
DRAWN BY	SIZE B	$HP_E4401/60100/CA3852/frontend75/ PATHNAME	E4401-60100 PART NUMBER
	CA3852 ASSY. REV	A3852 BRD. REV PAGE 20 OF 20	B-E4401-60100-1 DWG. NO.

Component-Level Information Packet for E4403-60001

Reference/Third Converter (3.0 GHz)

Agilent Technologies

Agilent Part Number: E4403-90004

Printed in Malaysia April 2001

Notice

The information contained in this document is subject to change without notice. Agilent Technologies makes no warranty of any kind with regard to this material, including but not limited to, the implied warranties of merchantability and fitness for a particular purpose. Agilent Technologies shall not be liable for errors contained herein or for incidental or consequential damages in connection with the furnishing, performance, or use of this material.

© Copyright Agilent Technologies Inc. 2000, 2001
All Rights Reserved. Reproduction, adaptation, or translation without prior written permission is prohibited, except as allowed under the copyright laws.

Agilent Part Number E4403-60001
Reference/Third Converter (3.0 Ghz)

Reference Designator	Agilent Part Number	Qty	Description	Mgr Code	Mfr Part Number
C101	0160-7798	1	CAP-FXD 0.1uF +-10% 50 V CER X7R	06352	C2012X7R1H104K
C102	0160-7798	1	CAP-FXD 0.1uF +-10% 50 V CER X7R	06352	C2012X7R1H104K
C103	0160-7798	1	CAP-FXD 0.1uF +-10% 50 V CER X7R	06352	C2012X7R1H104K
C104	0160-5944	1	CAP-FXD 0.047uF +-10% 50 V CER X7R	02010	08055C473KATA
C105	0180-4287	1	CAP-FXD 10uF +-20% 35 V TA	02010	TAJD106M035
C106	0160-7798	1	CAP-FXD 0.1uF +-10% 50 V CER X7R	06352	C2012X7R1H104K
C107	0160-7798	1	CAP-FXD 0.1uF +-10% 50 V CER X7R	06352	C2012X7R1H104K
C108	0180-4228	1	CAP-FXD 47uF +-20% 10 V TA	02010	TAJD476M010
C109	0160-7798	1	CAP-FXD 0.1uF +-10% 50 V CER X7R	06352	C2012X7R1H104K
C110	0160-7798	1	CAP-FXD 0.1uF +-10% 50 V CER X7R	06352	C2012X7R1H104K
C111	0160-5944	1	CAP-FXD 0.047uF +-10% 50 V CER X7R	02010	08055C473KATA
C112	0160-7798	1	CAP-FXD 0.1uF +-10% 50 V CER X7R	06352	C2012X7R1H104K
C113	0180-4228	1	CAP-FXD 47uF +-20% 10 V TA	02010	TAJD476M010
C114	0160-5944	1	CAP-FXD 0.047uF +-10% 50 V CER X7R	02010	08055C473KATA
C115	0180-4287	1	CAP-FXD 10uF +-20% 35 V TA	02010	TAJD106M035
C116	0180-4287	1	CAP-FXD 10uF +-20% 35 V TA	02010	TAJD106M035
C117	0180-4287	1	CAP-FXD 10uF +-20% 35 V TA	02010	TAJD106M035
C118	0160-7798	1	CAP-FXD 0.1uF +-10% 50 V CER X7R	06352	C2012X7R1H104K
C119	0160-7798	1	CAP-FXD 0.1uF +-10% 50 V CER X7R	06352	C2012X7R1H104K
C120	0160-7708	1	CAP-FXD 1000pF +-5% 50 V CER C0G	02010	08055A102JATRA
C121	0160-7798	1	CAP-FXD 0.1uF +-10% 50 V CER X7R	06352	C2012X7R1H104K
C122	0180-4287	1	CAP-FXD 10uF +-20% 35 V TA	02010	TAJD106M035
C123	0160-7835	1	CAP-FXD 100pF +-5% 50 V CER C0G	02010	06035A101JAT
C124	0160-7798	1	CAP-FXD 0.1uF +-10% 50 V CER X7R	06352	C2012X7R1H104K
C125	0160-7751	1	CAP-FXD 0.01uF +-10% 50 V CER X7R	02010	06035C103KAT
C126	0160-7708	1	CAP-FXD 1000pF +-5% 50 V CER C0G	02010	08055A102JATRA
C200	0160-7855	1	CAP-FXD 33pF +-5% 50 V CER C0G	02010	06035A330JAT
C201	0160-7872	1	CAP-FXD 82pF +-5% 50 V CER C0G	02010	06035A820JAT
C202	0160-7982	1	CAP-FXD 200pF +-5% 50 V CER C0G	02010	06035A201JAT
C203	0160-7748	1	CAP-FXD 1000pF +-10% 50 V CER X7R	02010	06035C102KAT

 **Indicates factory-selected value*

Agilent Part Number E4403-60001
Reference/Third Converter (3.0 Ghz)

Reference Designator	Agilent Part Number	Qty	Description	Mgr Code	Mfr Part Number
C204	0160-7973	1	CAP-FXD 30pF +-5% 50 V CER C0G	02010	06035A300JAT
C205	0160-7850	1	CAP-FXD 27pF +-5% 50 V CER C0G	02010	06035A270JAT
C206	0160-7748	1	CAP-FXD 1000pF +-10% 50 V CER X7R	02010	06035C102KAT
C207	0160-7798	1	CAP-FXD 0.1uF +-10% 50 V CER X7R	06352	C2012X7R1H104K
C208	0160-7751	1	CAP-FXD 0.01uF +-10% 50 V CER X7R	02010	06035C103KAT
C209	0160-7748	1	CAP-FXD 1000pF +-10% 50 V CER X7R	02010	06035C102KAT
C210	0160-7748	1	CAP-FXD 1000pF +-10% 50 V CER X7R	02010	06035C102KAT
C211	0160-7835	1	CAP-FXD 100pF +-5% 50 V CER C0G	02010	06035A101JAT
C212	0160-7751	1	CAP-FXD 0.01uF +-10% 50 V CER X7R	02010	06035C103KAT
C213	0160-7751	1	CAP-FXD 0.01uF +-10% 50 V CER X7R	02010	06035C103KAT
C214	0160-7751	1	CAP-FXD 0.01uF +-10% 50 V CER X7R	02010	06035C103KAT
C215	0160-7748	1	CAP-FXD 1000pF +-10% 50 V CER X7R	02010	06035C102KAT
C216	0160-7748	1	CAP-FXD 1000pF +-10% 50 V CER X7R	02010	06035C102KAT
C217	0160-7748	1	CAP-FXD 1000pF +-10% 50 V CER X7R	02010	06035C102KAT
C218	0160-7748	1	CAP-FXD 1000pF +-10% 50 V CER X7R	02010	06035C102KAT
C219	0160-7748	1	CAP-FXD 1000pF +-10% 50 V CER X7R	02010	06035C102KAT
C220	0160-7798	1	CAP-FXD 0.1uF +-10% 50 V CER X7R	06352	C2012X7R1H104K
C221	0160-7748	1	CAP-FXD 1000pF +-10% 50 V CER X7R	02010	06035C102KAT
C222	0160-7798	1	CAP-FXD 0.1uF +-10% 50 V CER X7R	06352	C2012X7R1H104K
C223	0160-7516	1	CAP-FXD 330pF +-5% 50 V CER C0G	06352	C1608COG1H331J
C224	0160-7835	1	CAP-FXD 100pF +-5% 50 V CER C0G	02010	06035A101JAT
C225	0160-7872	1	CAP-FXD 82pF +-5% 50 V CER C0G	02010	06035A820JAT
C300	0160-7798	1	CAP-FXD 0.1uF +-10% 50 V CER X7R	06352	C2012X7R1H104K
C301	0160-7798	1	CAP-FXD 0.1uF +-10% 50 V CER X7R	06352	C2012X7R1H104K
C302	0160-7798	1	CAP-FXD 0.1uF +-10% 50 V CER X7R	06352	C2012X7R1H104K
C303	0180-3751	1	CAP-FXD 1uF +-20% 35 V TA	02010	TAJB105M035
C304	0160-7975	1	CAP-FXD 51pF +-5% 50 V CER C0G	06352	C1608COG1H510J
C305	0160-7749	1	CAP-FXD 22pF +-5% 50 V CER C0G	02010	06035A220JAT
C307	0160-7986	1	CAP-FXD 390pF +-5% 50 V CER C0G	06352	C1608COG1H391J
C308	0160-7798	1	CAP-FXD 0.1uF +-10% 50 V CER X7R	06352	C2012X7R1H104K

Agilent Part Number E4403-60001
Reference/Third Converter (3.0 Ghz)

Reference Designator	Agilent Part Number	Qty	Description	Mgr Code	Mfr Part Number
C309	0160-7967	1	CAP-FXD 9pF 50 V CER C0G	06352	C1608COG1H090C T
C310	0160-7967	1	CAP-FXD 9pF 50 V CER C0G	06352	C1608COG1H090C T
C312	0160-7986	1	CAP-FXD 390pF +-5% 50 V CER C0G	06352	C1608COG1H391J
C313	0160-7986	1	CAP-FXD 390pF +-5% 50 V CER C0G	06352	C1608COG1H391J
C314	0160-7830	1	CAP-FXD 1pF +-25% 50 V CER C0G	12340	C0603C109C5GAC
C315	0160-7986	1	CAP-FXD 390pF +-5% 50 V CER C0G	06352	C1608COG1H391J
C316	0160-7986	1	CAP-FXD 390pF +-5% 50 V CER C0G	06352	C1608COG1H391J
C318	0160-7749	1	CAP-FXD 22pF +-5% 50 V CER C0G	02010	06035A220JAT
C319	0180-3751	1	CAP-FXD 1uF +-20% 35 V TA	02010	TAJB105M035
C320	0160-7798	1	CAP-FXD 0.1uF +-10% 50 V CER X7R	06352	C2012X7R1H104K
C321	0180-4228	1	CAP-FXD 47uF +-20% 10 V TA	02010	TAJD476M010
C322	0160-7986	1	CAP-FXD 390pF +-5% 50 V CER C0G	06352	C1608COG1H391J
C323	0160-7798	1	CAP-FXD 0.1uF +-10% 50 V CER X7R	06352	C2012X7R1H104K
C325	0160-7986	1	CAP-FXD 390pF +-5% 50 V CER C0G	06352	C1608COG1H391J
C326	0160-7833	1	CAP-FXD 1.8pF +-13.89% 50 V CER C0G	02010	06035A1R8CAT
C327	0160-7833	1	CAP-FXD 1.8pF +-13.89% 50 V CER C0G	02010	06035A1R8CAT
C328	0160-7833	1	CAP-FXD 1.8pF +-13.89% 50 V CER C0G	02010	06035A1R8CAT
C329	0160-7832	1	CAP-FXD 1.5pF +-16.67% 50 V CER C0G	02010	06035A1R5CAT
C330	0160-7832	1	CAP-FXD 1.5pF +-16.67% 50 V CER C0G	02010	06035A1R5CAT
C331	0160-7832	1	CAP-FXD 1.5pF +-16.67% 50 V CER C0G	02010	06035A1R5CAT
C332	0160-7835	1	CAP-FXD 100pF +-5% 50 V CER C0G	02010	06035A101JAT
C333	0160-7798	1	CAP-FXD 0.1uF +-10% 50 V CER X7R	06352	C2012X7R1H104K
C334	0180-4228	1	CAP-FXD 47uF +-20% 10 V TA	02010	TAJD476M010
C335	0180-3751	1	CAP-FXD 1uF +-20% 35 V TA	02010	TAJB105M035
C336	0160-7833	1	CAP-FXD 1.8pF +-13.89% 50 V CER C0G	02010	06035A1R8CAT
C337	0160-7835	1	CAP-FXD 100pF +-5% 50 V CER C0G	02010	06035A101JAT
C338	0160-7835	1	CAP-FXD 100pF +-5% 50 V CER C0G	02010	06035A101JAT
C339	0160-7798	1	CAP-FXD 0.1uF +-10% 50 V CER X7R	06352	C2012X7R1H104K

 **Indicates factory-selected value*

Agilent Part Number E4403-60001
Reference/Third Converter (3.0 Ghz)

Reference Designator	Agilent Part Number	Qty	Description	Mgr Code	Mfr Part Number
C400	0160-7986	1	CAP-FXD 390pF +-5% 50 V CER C0G	06352	C1608COG1H391J
C401	0160-7516	1	CAP-FXD 330pF +-5% 50 V CER C0G	06352	C1608COG1H331J
C404	0160-7986	1	CAP-FXD 390pF +-5% 50 V CER C0G	06352	C1608COG1H391J
C405	0160-7798	1	CAP-FXD 0.1uF +-10% 50 V CER X7R	06352	C2012X7R1H104K
C406	0160-7963	1	CAP-FXD 3pF +-7.8% 50 V CER C0G	02010	06035A3R0CAT
C407	0160-7516	1	CAP-FXD 330pF +-5% 50 V CER C0G	06352	C1608COG1H331J
C408	0160-7963	1	CAP-FXD 3pF +-7.8% 50 V CER C0G	02010	06035A3R0CAT
C409	0160-7834	1	CAP-FXD 10pF +-5% 50 V CER C0G	02010	06035A100JAT
C410	0160-7798	1	CAP-FXD 0.1uF +-10% 50 V CER X7R	06352	C2012X7R1H104K
C411	0160-7834	1	CAP-FXD 10pF +-5% 50 V CER C0G	02010	06035A100JAT
C413	0160-7986	1	CAP-FXD 390pF +-5% 50 V CER C0G	06352	C1608COG1H391J
C414	0160-7860	1	CAP-FXD 4.7pF +-5.31% 50 V CER C0G	02010	06035A4R7CAT
C416	0180-4287	1	CAP-FXD 10uF +-20% 35 V TA	02010	TAJD106M035
C417	0160-7751	1	CAP-FXD 0.01uF +-10% 50 V CER X7R	02010	06035C103KAT
C418	0160-7516	1	CAP-FXD 330pF +-5% 50 V CER C0G	06352	C1608COG1H331J
C419	0160-7516	1	CAP-FXD 330pF +-5% 50 V CER C0G	06352	C1608COG1H331J
C420	0180-4287	1	CAP-FXD 10uF +-20% 35 V TA	02010	TAJD106M035
C421	0160-7969	1	CAP-FXD 13pF +-5% 50 V CER C0G	06352	C1608COG1H130J
C422	0160-7860	1	CAP-FXD 4.7pF +-5.31% 50 V CER C0G	02010	06035A4R7CAT
C423	0160-7967	1	CAP-FXD 9pF 50 V CER C0G	06352	C1608COG1H090C T
C424	0160-7969	1	CAP-FXD 13pF +-5% 50 V CER C0G	06352	C1608COG1H130J
C425	0160-7860	1	CAP-FXD 4.7pF +-5.31% 50 V CER C0G	02010	06035A4R7CAT
C426	0160-7798	1	CAP-FXD 0.1uF +-10% 50 V CER X7R	06352	C2012X7R1H104K
C428	0160-7969	1	CAP-FXD 13pF +-5% 50 V CER C0G	06352	C1608COG1H130J
C429	0160-7967	1	CAP-FXD 9pF 50 V CER C0G	06352	C1608COG1H090C T
C430	0160-7516	1	CAP-FXD 330pF +-5% 50 V CER C0G	06352	C1608COG1H331J
C431	0160-7986	1	CAP-FXD 390pF +-5% 50 V CER C0G	06352	C1608COG1H391J
C432	0160-7516	1	CAP-FXD 330pF +-5% 50 V CER C0G	06352	C1608COG1H331J

Agilent Part Number E4403-60001
Reference/Third Converter (3.0 Ghz)

Reference Designator	Agilent Part Number	Qty	Description	Mgr Code	Mfr Part Number
C433	0160-7751	1	CAP-FXD 0.01uF +-10% 50 V CER X7R	02010	06035C103KAT
C434	0160-7751	1	CAP-FXD 0.01uF +-10% 50 V CER X7R	02010	06035C103KAT
C435	0160-7751	1	CAP-FXD 0.01uF +-10% 50 V CER X7R	02010	06035C103KAT
C436	0160-7967	1	CAP-FXD 9pF 50 V CER C0G	06352	C1608COG1H090C T
C437	0160-7860	1	CAP-FXD 4.7pF +-5.31% 50 V CER C0G	02010	06035A4R7CAT
C438	0160-7969	1	CAP-FXD 13pF +-5% 50 V CER C0G	06352	C1608COG1H130J
C439	0160-7751	1	CAP-FXD 0.01uF +-10% 50 V CER X7R	02010	06035C103KAT
C440	0160-7751	1	CAP-FXD 0.01uF +-10% 50 V CER X7R	02010	06035C103KAT
C441	0160-7748	1	CAP-FXD 1000pF +-10% 50 V CER X7R	02010	06035C102KAT
C442	0160-7751	1	CAP-FXD 0.01uF +-10% 50 V CER X7R	02010	06035C103KAT
C443	0160-7860	1	CAP-FXD 4.7pF +-5.31% 50 V CER C0G	02010	06035A4R7CAT
C444	0160-7969	1	CAP-FXD 13pF +-5% 50 V CER C0G	06352	C1608COG1H130J
C445	0160-7969	1	CAP-FXD 13pF +-5% 50 V CER C0G	06352	C1608COG1H130J
C446	0160-7751	1	CAP-FXD 0.01uF +-10% 50 V CER X7R	02010	06035C103KAT
C447	0160-7798	1	CAP-FXD 0.1uF +-10% 50 V CER X7R	06352	C2012X7R1H104K
C448	0160-7516	1	CAP-FXD 330pF +-5% 50 V CER C0G	06352	C1608COG1H331J
C449	0160-7967	1	CAP-FXD 9pF 50 V CER C0G	06352	C1608COG1H090C T
C451	0160-7708	1	CAP-FXD 1000pF +-5% 50 V CER C0G	02010	08055A102JATRA
C452	0160-7751	1	CAP-FXD 0.01uF +-10% 50 V CER X7R	02010	06035C103KAT
C453	0160-7751	1	CAP-FXD 0.01uF +-10% 50 V CER X7R	02010	06035C103KAT
C454	0160-7986	1	CAP-FXD 390pF +-5% 50 V CER C0G	06352	C1608COG1H391J
C455	0160-7708	1	CAP-FXD 1000pF +-5% 50 V CER C0G	02010	08055A102JATRA
C456	0160-7751	1	CAP-FXD 0.01uF +-10% 50 V CER X7R	02010	06035C103KAT
C457	0160-7751	1	CAP-FXD 0.01uF +-10% 50 V CER X7R	02010	06035C103KAT
C458	0160-7748	1	CAP-FXD 1000pF +-10% 50 V CER X7R	02010	06035C102KAT
C459	0160-7834	1	CAP-FXD 10pF +-5% 50 V CER C0G	02010	06035A100JAT
C460	0160-7516	1	CAP-FXD 330pF +-5% 50 V CER C0G	06352	C1608COG1H331J
C461	0160-7748	1	CAP-FXD 1000pF +-10% 50 V CER X7R	02010	06035C102KAT

 **Indicates factory-selected value*

Agilent Part Number E4403-60001
Reference/Third Converter (3.0 Ghz)

Reference Designator	Agilent Part Number	Qty	Description	Mgr Code	Mfr Part Number
C462	0160-7751	1	CAP-FXD 0.01uF +-10% 50 V CER X7R	02010	06035C103KAT
C463	0160-7842	1	CAP-FXD 150pF +-5% 50 V CER C0G	02010	06035A151JAT
C464	0160-7971	1	CAP-FXD 20pF +-5% 50 V CER C0G	02010	06035A200JAT
C465	0160-7751	1	CAP-FXD 0.01uF +-10% 50 V CER X7R	02010	06035C103KAT
C466	0160-7751	1	CAP-FXD 0.01uF +-10% 50 V CER X7R	02010	06035C103KAT
C467	0160-7751	1	CAP-FXD 0.01uF +-10% 50 V CER X7R	02010	06035C103KAT
C468	0160-7748	1	CAP-FXD 1000pF +-10% 50 V CER X7R	02010	06035C102KAT
C469	0160-7857	1	CAP-FXD 39pF +-5% 50 V CER C0G	02010	06035A390JAT
C470	0160-7751	1	CAP-FXD 0.01uF +-10% 50 V CER X7R	02010	06035C103KAT
C471	0160-7976	1	CAP-FXD 62pF +-5% 50 V CER C0G	06352	C1608COG1H620J
C472	0160-7976	1	CAP-FXD 62pF +-5% 50 V CER C0G	06352	C1608COG1H620J
C473	0160-7842	1	CAP-FXD 150pF +-5% 50 V CER C0G	02010	06035A151JAT
C474	0160-7751	1	CAP-FXD 0.01uF +-10% 50 V CER X7R	02010	06035C103KAT
C475	0160-7751	1	CAP-FXD 0.01uF +-10% 50 V CER X7R	02010	06035C103KAT
C500	0160-7798	1	CAP-FXD 0.1uF +-10% 50 V CER X7R	06352	C2012X7R1H104K
C501	0180-4316	1	CAP-FXD 220uF +-20% 50 V AL-ELCTLT	06360	SME50VB221M10X 16LL
C503	0180-4316	1	CAP-FXD 220uF +-20% 50 V AL-ELCTLT	06360	SME50VB221M10X 16LL
C504	0160-7751	1	CAP-FXD 0.01uF +-10% 50 V CER X7R	02010	06035C103KAT
C505	0180-4287	1	CAP-FXD 10uF +-20% 35 V TA	02010	TAJD106M035
C506	0160-7751	1	CAP-FXD 0.01uF +-10% 50 V CER X7R	02010	06035C103KAT
C550	0160-7798	1	CAP-FXD 0.1uF +-10% 50 V CER X7R	06352	C2012X7R1H104K
C551	0160-7798	1	CAP-FXD 0.1uF +-10% 50 V CER X7R	06352	C2012X7R1H104K
C552	0160-7798	1	CAP-FXD 0.1uF +-10% 50 V CER X7R	06352	C2012X7R1H104K
C600	0180-4228	1	CAP-FXD 47uF +-20% 10 V TA	02010	TAJD476M010
C601	0180-4274	1	CAP-FXD 4.7uF +-20% 50 V TA	12340	T491D475M050AS
C602	0180-4116	1	CAP-FXD 22uF +-20% 20 V TA	02010	TAJD226M020
C603	0180-4116	1	CAP-FXD 22uF +-20% 20 V TA	02010	TAJD226M020
C604	0180-4228	1	CAP-FXD 47uF +-20% 10 V TA	02010	TAJD476M010

Agilent Part Number E4403-60001
Reference/Third Converter (3.0 Ghz)

Reference Designator	Agilent Part Number	Qty	Description	Mgr Code	Mfr Part Number
C606	0180-4116	1	CAP-FXD 22uF +-20% 20 V TA	02010	TAJD226M020
C609	0180-4287	1	CAP-FXD 10uF +-20% 35 V TA	02010	TAJD106M035
C610	0160-7751	1	CAP-FXD 0.01uF +-10% 50 V CER X7R	02010	06035C103KAT
C614	0160-7751	1	CAP-FXD 0.01uF +-10% 50 V CER X7R	02010	06035C103KAT
C700	0160-7798	1	CAP-FXD 0.1uF +-10% 50 V CER X7R	06352	C2012X7R1H104K
C703	0160-7798	1	CAP-FXD 0.1uF +-10% 50 V CER X7R	06352	C2012X7R1H104K
C704	0160-7798	1	CAP-FXD 0.1uF +-10% 50 V CER X7R	06352	C2012X7R1H104K
C706	0160-7798	1	CAP-FXD 0.1uF +-10% 50 V CER X7R	06352	C2012X7R1H104K
C707	0160-7798	1	CAP-FXD 0.1uF +-10% 50 V CER X7R	06352	C2012X7R1H104K
C708	0160-7798	1	CAP-FXD 0.1uF +-10% 50 V CER X7R	06352	C2012X7R1H104K
C709	0160-7798	1	CAP-FXD 0.1uF +-10% 50 V CER X7R	06352	C2012X7R1H104K
C710	0160-7798	1	CAP-FXD 0.1uF +-10% 50 V CER X7R	06352	C2012X7R1H104K
C711	0160-7798	1	CAP-FXD 0.1uF +-10% 50 V CER X7R	06352	C2012X7R1H104K
C712	0160-7798	1	CAP-FXD 0.1uF +-10% 50 V CER X7R	06352	C2012X7R1H104K
C713	0160-7798	1	CAP-FXD 0.1uF +-10% 50 V CER X7R	06352	C2012X7R1H104K
C714	0160-7798	1	CAP-FXD 0.1uF +-10% 50 V CER X7R	06352	C2012X7R1H104K
C800	0160-7766	1	CAP-FXD 820pF +-5% 50 V CER C0G	06352	C2012C0G1H821JT
C801	0160-7988	1	CAP-FXD 470pF +-5% 50 V CER C0G	06352	C1608COG1H471J
C802	0160-7766	1	CAP-FXD 820pF +-5% 50 V CER C0G	06352	C2012C0G1H821JT
C803	0160-7751	1	CAP-FXD 0.01uF +-10% 50 V CER X7R	02010	06035C103KAT
C804	0160-7988	1	CAP-FXD 470pF +-5% 50 V CER C0G	06352	C1608COG1H471J
C805	0160-7751	1	CAP-FXD 0.01uF +-10% 50 V CER X7R	02010	06035C103KAT
C806	0160-7751	1	CAP-FXD 0.01uF +-10% 50 V CER X7R	02010	06035C103KAT
C807	0160-7751	1	CAP-FXD 0.01uF +-10% 50 V CER X7R	02010	06035C103KAT
C808	0160-7751	1	CAP-FXD 0.01uF +-10% 50 V CER X7R	02010	06035C103KAT
C809	0160-7405	1	CAP-FXD 560pF +-5% 50 V CER C0G	06352	C2012C0G1H561J
C810	0160-7405	1	CAP-FXD 560pF +-5% 50 V CER C0G	06352	C2012C0G1H561J
C811	0160-7751	1	CAP-FXD 0.01uF +-10% 50 V CER X7R	02010	06035C103KAT
C812	0160-7864	1	CAP-FXD 56pF +-5% 50 V CER C0G	02010	06035A560JAT
C813	0160-7708	1	CAP-FXD 1000pF +-5% 50 V CER C0G	02010	08055A102JATRA

 **Indicates factory-selected value*

Agilent Part Number E4403-60001
Reference/Third Converter (3.0 Ghz)

Reference Designator	Agilent Part Number	Qty	Description	Mgr Code	Mfr Part Number
C814	0160-7987	1	CAP-FXD 430pF +-5% 50 V CER C0G	06352	C1608COG1H431J
C815	0160-5944	1	CAP-FXD 0.047uF +-10% 50 V CER X7R	02010	08055C473KATA
C816	0160-5944	1	CAP-FXD 0.047uF +-10% 50 V CER X7R	02010	08055C473KATA
C817	0160-5944	1	CAP-FXD 0.047uF +-10% 50 V CER X7R	02010	08055C473KATA
C818	0160-5944	1	CAP-FXD 0.047uF +-10% 50 V CER X7R	02010	08055C473KATA
C819	0160-7751	1	CAP-FXD 0.01uF +-10% 50 V CER X7R	02010	06035C103KAT
C820	0160-7751	1	CAP-FXD 0.01uF +-10% 50 V CER X7R	02010	06035C103KAT
C821	0160-7798	1	CAP-FXD 0.1uF +-10% 50 V CER X7R	06352	C2012X7R1H104K
C822	0160-7708	1	CAP-FXD 1000pF +-5% 50 V CER C0G	02010	08055A102JATRA
C823	0160-7751	1	CAP-FXD 0.01uF +-10% 50 V CER X7R	02010	06035C103KAT
C824	0160-7781	1	CAP-FXD 2200pF +-10% 50 V CER X7R	02010	06035C222KAT
C825	0160-7798	1	CAP-FXD 0.1uF +-10% 50 V CER X7R	06352	C2012X7R1H104K
C826	0160-7751	1	CAP-FXD 0.01uF +-10% 50 V CER X7R	02010	06035C103KAT
C827	0160-7988	1	CAP-FXD 470pF +-5% 50 V CER C0G	06352	C1608COG1H471J
C828	0160-7751	1	CAP-FXD 0.01uF +-10% 50 V CER X7R	02010	06035C103KAT
C829	0160-5944	1	CAP-FXD 0.047uF +-10% 50 V CER X7R	02010	08055C473KATA
C830	0160-7751	1	CAP-FXD 0.01uF +-10% 50 V CER X7R	02010	06035C103KAT
C831	0160-7781	1	CAP-FXD 2200pF +-10% 50 V CER X7R	02010	06035C222KAT
C832	0160-7845	1	CAP-FXD 180pF +-5% 50 V CER C0G	02010	06035A181JAT
C833	0160-7511	1	CAP-FXD 270pF +-5% 50 V CER C0G	06352	C1608COG1H271J
C834	0160-7749	1	CAP-FXD 22pF +-5% 50 V CER C0G	02010	06035A220JAT
C835	0180-4116	1	CAP-FXD 22uF +-20% 20 V TA	02010	TAJD226M020
C836	0160-7751	1	CAP-FXD 0.01uF +-10% 50 V CER X7R	02010	06035C103KAT
C837	0160-7751	1	CAP-FXD 0.01uF +-10% 50 V CER X7R	02010	06035C103KAT
C839	0160-7751	1	CAP-FXD 0.01uF +-10% 50 V CER X7R	02010	06035C103KAT
C840	0160-7751	1	CAP-FXD 0.01uF +-10% 50 V CER X7R	02010	06035C103KAT
C841	0160-7751	1	CAP-FXD 0.01uF +-10% 50 V CER X7R	02010	06035C103KAT
C842	0160-5944	1	CAP-FXD 0.047uF +-10% 50 V CER X7R	02010	08055C473KATA
C843	0160-7751	1	CAP-FXD 0.01uF +-10% 50 V CER X7R	02010	06035C103KAT
C844	0160-7853	1	CAP-FXD 3.3pF +-7.6% 50 V CER C0G	02010	06035A3R3CAT

Agilent Part Number E4403-60001
Reference/Third Converter (3.0 Ghz)

Reference Designator	Agilent Part Number	Qty	Description	Mgr Code	Mfr Part Number
C845	0160-5944	1	CAP-FXD 0.047uF +-10% 50 V CER X7R	02010	08055C473KATA
C846	0160-7751	1	CAP-FXD 0.01uF +-10% 50 V CER X7R	02010	06035C103KAT
C847	0160-7837	1	CAP-FXD 12pF +-5% 50 V CER C0G	02010	06035A120JAT
C848	0160-7798	1	CAP-FXD 0.1uF +-10% 50 V CER X7R	06352	C2012X7R1H104K
C849	0160-7798	1	CAP-FXD 0.1uF +-10% 50 V CER X7R	06352	C2012X7R1H104K
C850	0160-7751	1	CAP-FXD 0.01uF +-10% 50 V CER X7R	02010	06035C103KAT
C851	0160-7751	1	CAP-FXD 0.01uF +-10% 50 V CER X7R	02010	06035C103KAT
C852	0160-7798	1	CAP-FXD 0.1uF +-10% 50 V CER X7R	06352	C2012X7R1H104K
C853	0160-7751	1	CAP-FXD 0.01uF +-10% 50 V CER X7R	02010	06035C103KAT
C854	0160-7798	1	CAP-FXD 0.1uF +-10% 50 V CER X7R	06352	C2012X7R1H104K
C855	0160-7751	1	CAP-FXD 0.01uF +-10% 50 V CER X7R	02010	06035C103KAT
C856	0160-7751	1	CAP-FXD 0.01uF +-10% 50 V CER X7R	02010	06035C103KAT
C857	0160-7751	1	CAP-FXD 0.01uF +-10% 50 V CER X7R	02010	06035C103KAT
C858	0160-7798	1	CAP-FXD 0.1uF +-10% 50 V CER X7R	06352	C2012X7R1H104K
C859	0160-7751	1	CAP-FXD 0.01uF +-10% 50 V CER X7R	02010	06035C103KAT
C860	0160-7751	1	CAP-FXD 0.01uF +-10% 50 V CER X7R	02010	06035C103KAT
C900	0160-7798	1	CAP-FXD 0.1uF +-10% 50 V CER X7R	06352	C2012X7R1H104K
C901	0160-7711	1	CAP-FXD 4700pF +-10% 50 V CER X7R	02010	06035C472KATRA
C902	0180-4287	1	CAP-FXD 10uF +-20% 35 V TA	02010	TAJD106M035
C903	0160-7798	1	CAP-FXD 0.1uF +-10% 50 V CER X7R	06352	C2012X7R1H104K
C904	0160-7748	1	CAP-FXD 1000pF +-10% 50 V CER X7R	02010	06035C102KAT
C905	0160-7776	1	CAP-FXD 3.9pF +-6.4% 50 V CER C0G	02010	06035A3R9CAT
C906	0160-7861	1	CAP-FXD 47pF +-5% 50 V CER C0G	02010	06035A470JAT
C907	0160-7855	1	CAP-FXD 33pF +-5% 50 V CER C0G	02010	06035A330JAT
C908	0160-7968	1	CAP-FXD 11pF +-5% 50 V CER C0G	02010	06035A110CAT
C909	0160-7781	1	CAP-FXD 2200pF +-10% 50 V CER X7R	02010	06035C222KAT
C910	0160-7776	1	CAP-FXD 3.9pF +-6.4% 50 V CER C0G	02010	06035A3R9CAT
C911	0160-7708	1	CAP-FXD 1000pF +-5% 50 V CER C0G	02010	08055A102JATRA
C912	0160-7835	1	CAP-FXD 100pF +-5% 50 V CER C0G	02010	06035A101JAT
C913	0160-7708	1	CAP-FXD 1000pF +-5% 50 V CER C0G	02010	08055A102JATRA

 **Indicates factory-selected value*

Agilent Part Number E4403-60001
Reference/Third Converter (3.0 Ghz)

Reference Designator	Agilent Part Number	Qty	Description	Mgr Code	Mfr Part Number
C914	0160-7748	1	CAP-FXD 1000pF +-10% 50 V CER X7R	02010	06035C102KAT
C915	0160-7986	1	CAP-FXD 390pF +-5% 50 V CER C0G	06352	C1608COG1H391J
C917	0160-7857	1	CAP-FXD 39pF +-5% 50 V CER C0G	02010	06035A390JAT
CR1	1900-0100	1	DIODE-PIN	28480	1900-0100
CR2	0122-0172	1	DIODE-VVC 29PF 10% C 3/C25-MIN5	02910	BBY40
CR3	1900-0078	1	DIODE-SCHOTTKY SM SIG	01542	HSMS-2800
CR4	1906-0320	1	DIODE-DUAL 40V 40MA T0-236AA	36393	BAS 40-04
CR100	1901-1227	1	DIODE-SWITCHING 75V 200MA 6NS TO-236	02910	BAS16
CR101	1901-1227	1	DIODE-SWITCHING 75V 200MA 6NS TO-236	02910	BAS16
CR200	1906-0320	1	DIODE-DUAL 40V 40MA T0-236AA	36393	BAS 40-04
CR201	1901-1227	1	DIODE-SWITCHING 75V 200MA 6NS TO-236	02910	BAS16
CR202	1901-1227	1	DIODE-SWITCHING 75V 200MA 6NS TO-236	02910	BAS16
CR203	1901-1227	1	DIODE-SWITCHING 75V 200MA 6NS TO-236	02910	BAS16
CR204	1901-1227	1	DIODE-SWITCHING 75V 200MA 6NS TO-236	02910	BAS16
CR205	1901-1227	1	DIODE-SWITCHING 75V 200MA 6NS TO-236	02910	BAS16
CR206	0122-0172	1	DIODE-VVC 29PF 10% C 3/C25-MIN5	02910	BBY40
CR207	0122-0172	1	DIODE-VVC 29PF 10% C 3/C25-MIN5	02910	BBY40
CR208	0122-0172	1	DIODE-VVC 29PF 10% C 3/C25-MIN5	02910	BBY40
CR209	0122-0172	1	DIODE-VVC 29PF 10% C 3/C25-MIN5	02910	BBY40
CR210	1906-0320	1	DIODE-DUAL 40V 40MA T0-236AA	36393	BAS 40-04
CR300	1900-0217	1	DIODE-SCHOTTKY SM SIG	01542	HSMS-2822
CR301	1900-0202	1	DIODE-SCHOTTKY SM SIG	01542	1900-0202
CR400	1900-0100	1	DIODE-PIN	28480	1900-0100
CR401	1900-0100	1	DIODE-PIN	28480	1900-0100
CR402	1900-0100	1	DIODE-PIN	28480	1900-0100
CR403	1900-0270	1	DIODE-PIN	01542	HSMP-3822
CR404	1900-0270	1	DIODE-PIN	01542	HSMP-3822
CR501	1901-1227	1	DIODE-SWITCHING 75V 200MA 6NS TO-236	02910	BAS16
CR502	1901-1227	1	DIODE-SWITCHING 75V 200MA 6NS TO-236	02910	BAS16
CR503	1901-1227	1	DIODE-SWITCHING 75V 200MA 6NS TO-236	02910	BAS16

Agilent Part Number E4403-60001
Reference/Third Converter (3.0 Ghz)

Reference Designator	Agilent Part Number	Qty	Description	Mgr Code	Mfr Part Number
CR700	1901-1227	1	DIODE-SWITCHING 75V 200MA 6NS TO-236	02910	BAS16
CR701	1901-1227	1	DIODE-SWITCHING 75V 200MA 6NS TO-236	02910	BAS16
CR702	1901-1227	1	DIODE-SWITCHING 75V 200MA 6NS TO-236	02910	BAS16
CR800	1906-0291	1	DIODE-DUAL 70V 100MA T0-236AA	02910	BAV99
CR801	1901-1227	1	DIODE-SWITCHING 75V 200MA 6NS TO-236	02910	BAS16
CR802	1900-0072	1	DIODE-SCHOTTKY SM SIG	37793	HSMS-2820
CR803	0122-0172	1	DIODE-VVC 29PF 10% C 3/C25-MIN5	02910	BBY40
CR804	0122-0172	1	DIODE-VVC 29PF 10% C 3/C25-MIN5	02910	BBY40
CR805	1906-0291	1	DIODE-DUAL 70V 100MA T0-236AA	02910	BAV99
CR806	1902-0951	1	DIODE-ZNR 5.1V 5% DO-35 PD.4W TC+.035%	28480	1902-0951
CR807	1901-1227	1	DIODE-SWITCHING 75V 200MA 6NS TO-236	02910	BAS16
E1	9170-1421	1	CORE-SHIELDING BEAD	06352	HF50ACB-322513
E2	9170-1421	1	CORE-SHIELDING BEAD	06352	HF50ACB-322513
E300	9170-1584	1	CORE-SHIELDING BEAD	06352	MMZ2012Y102B
E301	9170-1584	1	CORE-SHIELDING BEAD	06352	MMZ2012Y102B
E302	9170-1584	1	CORE-SHIELDING BEAD	06352	MMZ2012Y102B
E303	9170-1584	1	CORE-SHIELDING BEAD	06352	MMZ2012Y102B
E304	9170-1584	1	CORE-SHIELDING BEAD	06352	MMZ2012Y102B
E306	9170-1584	1	CORE-SHIELDING BEAD	06352	MMZ2012Y102B
E800	9170-1421	1	CORE-SHIELDING BEAD	06352	HF50ACB-322513
E801	9170-1421	1	CORE-SHIELDING BEAD	06352	HF50ACB-322513
E802	9170-1584	1	CORE-SHIELDING BEAD	06352	MMZ2012Y102B
E803	9170-1584	1	CORE-SHIELDING BEAD	06352	MMZ2012Y102B
E804	9170-1421	1	CORE-SHIELDING BEAD	06352	HF50ACB-322513
FL500	9135-0461	1	FILTER-SUPPRESSION EMI; SMT; WORKING	09939	NFM61R10T102M0 0-621
FL501	9135-0461	1	FILTER-SUPPRESSION EMI; SMT; WORKING	09939	NFM61R10T102M0 0-621
FL502	9135-0461	1	FILTER-SUPPRESSION EMI; SMT; WORKING	09939	NFM61R10T102M0 0-621

 **Indicates factory-selected value*

Agilent Part Number E4403-60001
Reference/Third Converter (3.0 Ghz)

Reference Designator	Agilent Part Number	Qty	Description	Mgr Code	Mfr Part Number
FL503	9135-0461	1	FILTER-SUPPRESSION EMI; SMT; WORKING	09939	NFM61R10T102M0 0-621
FL504	9135-0461	1	FILTER-SUPPRESSION EMI; SMT; WORKING	09939	NFM61R10T102M0 0-621
FL505	9135-0461	1	FILTER-SUPPRESSION EMI; SMT; WORKING	09939	NFM61R10T102M0 0-621
FL506	9135-0461	1	FILTER-SUPPRESSION EMI; SMT; WORKING	09939	NFM61R10T102M0 0-621
FL507	9135-0461	1	FILTER-SUPPRESSION EMI; SMT; WORKING	09939	NFM61R10T102M0 0-621
FL508	9135-0461	1	FILTER-SUPPRESSION EMI; SMT; WORKING	09939	NFM61R10T102M0 0-621
FL509	9135-0461	1	FILTER-SUPPRESSION EMI; SMT; WORKING	09939	NFM61R10T102M0 0-621
FL510	9135-0461	1	FILTER-SUPPRESSION EMI; SMT; WORKING	09939	NFM61R10T102M0 0-621
FL511	9135-0461	1	FILTER-SUPPRESSION EMI; SMT; WORKING	09939	NFM61R10T102M0 0-621
FL512	9135-0461	1	FILTER-SUPPRESSION EMI; SMT; WORKING	09939	NFM61R10T102M0 0-621
FL513	9135-0461	1	FILTER-SUPPRESSION EMI; SMT; WORKING	09939	NFM61R10T102M0 0-621
FL514	9135-0461	1	FILTER-SUPPRESSION EMI; SMT; WORKING	09939	NFM61R10T102M0 0-621
FL600	9135-0461	1	FILTER-SUPPRESSION EMI; SMT; WORKING	09939	NFM61R10T102M0 0-621
FL601	9135-0461	1	FILTER-SUPPRESSION EMI; SMT; WORKING	09939	NFM61R10T102M0 0-621
FL602	9135-0461	1	FILTER-SUPPRESSION EMI; SMT; WORKING	09939	NFM61R10T102M0 0-621
FL603	9135-0461	1	FILTER-SUPPRESSION EMI; SMT; WORKING	09939	NFM61R10T102M0 0-621
FL604	9135-0461	1	FILTER-SUPPRESSION EMI; SMT; WORKING	09939	NFM61R10T102M0 0-621
FL605	9135-0461	1	FILTER-SUPPRESSION EMI; SMT; WORKING	09939	NFM61R10T102M0 0-621
FL606	9135-0461	1	FILTER-SUPPRESSION EMI; SMT; WORKING	09939	NFM61R10T102M0 0-621

Agilent Part Number E4403-60001
Reference/Third Converter (3.0 Ghz)

Reference Designator	Agilent Part Number	Qty	Description	Mgr Code	Mfr Part Number
FL607	9135-0461	1	FILTER-SUPPRESSION EMI; SMT; WORKING	09939	NFM61R10T102M0 0-621
FL608	9135-5352	1	FILTER-EMI 33PF CAPACITANCE; 50VDC; 2A	09939	NFM61R00T330M0 0-621
FL609	9135-5352	1	FILTER-EMI 33PF CAPACITANCE; 50VDC; 2A	09939	NFM61R00T330M0 0-621
FL610	9135-5352	1	FILTER-EMI 33PF CAPACITANCE; 50VDC; 2A	09939	NFM61R00T330M0 0-621
FL611	9135-5352	1	FILTER-EMI 33PF CAPACITANCE; 50VDC; 2A	09939	NFM61R00T330M0 0-621
FL612	9135-5352	1	FILTER-EMI 33PF CAPACITANCE; 50VDC; 2A	09939	NFM61R00T330M0 0-621
FL613	9135-5352	1	FILTER-EMI 33PF CAPACITANCE; 50VDC; 2A	09939	NFM61R00T330M0 0-621
FL615	9135-0461	1	FILTER-SUPPRESSION EMI; SMT; WORKING	09939	NFM61R10T102M0 0-621
FL616	9135-5352	1	FILTER-EMI 33PF CAPACITANCE; 50VDC; 2A	09939	NFM61R00T330M0 0-621
FL617	9135-5352	1	FILTER-EMI 33PF CAPACITANCE; 50VDC; 2A	09939	NFM61R00T330M0 0-621
FL618	9135-0461	1	FILTER-SUPPRESSION EMI; SMT; WORKING	09939	NFM61R10T102M0 0-621
FL700	9135-0461	1	FILTER-SUPPRESSION EMI; SMT; WORKING	09939	NFM61R10T102M0 0-621
FL701	9135-0461	1	FILTER-SUPPRESSION EMI; SMT; WORKING	09939	NFM61R10T102M0 0-621
FL702	9135-0461	1	FILTER-SUPPRESSION EMI; SMT; WORKING	09939	NFM61R10T102M0 0-621
J1	1250-2787	1	CONNECTOR-RF MMCX MALE PC-W/O-STDF	06860	85 MMCX-50-0-1/ 111OE
J2	1252-2403	1	CONN-POST TYPE .100-PIN-SPCG-MTG-END	04726	2524-5002UB
J3	1250-1842	1	CONNECTOR-RF BNC FEMALE PC-W-STDFS	05879	31-5506
J4	1250-1842	1	CONNECTOR-RF BNC FEMALE PC-W-STDFS	05879	31-5506
J5	1250-2787	1	CONNECTOR-RF MMCX MALE PC-W/O-STDF	06860	85 MMCX-50-0-1/ 111OE
J6	1250-2787	1	CONNECTOR-RF MMCX MALE PC-W/O-STDF	06860	85 MMCX-50-0-1/ 111OE

 **Indicates factory-selected value*

Agilent Part Number E4403-60001
Reference/Third Converter (3.0 Ghz)

Reference Designator	Agilent Part Number	Qty	Description	Mgr Code	Mfr Part Number
L1	9140-1104	1	INDUCTOR 820nH +-5% 2.8W-mmX3.4LG-mm	09891	KL32TER82J
L2	9140-1425	1	INDUCTOR 270nH +-5% 2.8W-mmX3.4LG-mm	06352	NL322522T-R27J
L3	9140-1103	1	INDUCTOR 680nH +-5% 2.8W-mmX3.4LG-mm	06352	NL322522T-R68J
L4	9140-1104	1	INDUCTOR 820nH +-5% 2.8W-mmX3.4LG-mm	09891	KL32TER82J
L5	9140-1205	1	INDUCTOR 82nH +-5% 2.8W-mmX3.4LG-mm Q27	09891	KL32TE082J
L6	9140-1099	1	INDUCTOR 220nH +-5% 2.8W-mmX3.4LG-mm	09891	KL32TER22J
L100	9140-1121	1	INDUCTOR 100uH +-5% 3.4W-mmX4.8LG-mm	06352	NL453232T-101J
L101	9140-1113	1	INDUCTOR 10uH +-5% 3.4W-mmX4.8LG-mm Q50	28480	9140-1113
L102	9140-1113	1	INDUCTOR 10uH +-5% 3.4W-mmX4.8LG-mm Q50	28480	9140-1113
L103	9140-1121	1	INDUCTOR 100uH +-5% 3.4W-mmX4.8LG-mm	06352	NL453232T-101J
L104	9140-1121	1	INDUCTOR 100uH +-5% 3.4W-mmX4.8LG-mm	06352	NL453232T-101J
L200	9140-1099	1	INDUCTOR 220nH +-5% 2.8W-mmX3.4LG-mm	09891	KL32TER22J
L201	9140-1424	1	INDUCTOR 180nH +-5% 2.8W-mmX3.4LG-mm	06352	NL322522T-R18J
L202	9140-1436	1	INDUCTOR 390nH +-5% 2.8W-mmX3.4LG-mm	06352	NL322522T-R39J
L203	9140-1104	1	INDUCTOR 820nH +-5% 2.8W-mmX3.4LG-mm	09891	KL32TER82J
L204	9140-1104	1	INDUCTOR 820nH +-5% 2.8W-mmX3.4LG-mm	09891	KL32TER82J
L205	9140-1104	1	INDUCTOR 820nH +-5% 2.8W-mmX3.4LG-mm	09891	KL32TER82J
L206	9140-1104	1	INDUCTOR 820nH +-5% 2.8W-mmX3.4LG-mm	09891	KL32TER82J
L301	9140-1121	1	INDUCTOR 100uH +-5% 3.4W-mmX4.8LG-mm	06352	NL453232T-101J
L302	9140-1202	1	INDUCTOR 47nH +-5% 2.8W-mmX3.4LG-mm Q26	06352	NL322522T-047J
L303	9140-1199	1	INDUCTOR 27nH +-10% 2.8W-mmX3.4LG-mm	09891	KL32TE027K
L304	9140-1119	1	INDUCTOR 68uH +-5% 3.4W-mmX4.8LG-mm Q50	28480	9140-1119
L305	9140-1199	1	INDUCTOR 27nH +-10% 2.8W-mmX3.4LG-mm	09891	KL32TE027K
L306	9170-1584	1	CORE-SHIELDING BEAD	06352	MMZ2012Y102B
L307	9140-1194	1	INDUCTOR 10nH +-10% 2.8W-mmX3.4LG-mm	09891	KL32TE010K
L308	9140-1194	1	INDUCTOR 10nH +-10% 2.8W-mmX3.4LG-mm	09891	KL32TE010K
L309	9170-1584	1	CORE-SHIELDING BEAD	06352	MMZ2012Y102B
L310	9140-1119	1	INDUCTOR 68uH +-5% 3.4W-mmX4.8LG-mm Q50	28480	9140-1119
L400	9140-1537	1	INDUCTOR 22nH +-10% 2.8W-mmX3.4LG-mm	06352	NL322522T-022K
L401	9140-1199	1	INDUCTOR 27nH +-10% 2.8W-mmX3.4LG-mm	09891	KL32TE027K

Agilent Part Number E4403-60001
Reference/Third Converter (3.0 Ghz)

Reference Designator	Agilent Part Number	Qty	Description	Mgr Code	Mfr Part Number
L402	9140-1537	1	INDUCTOR 22nH +-10% 2.8W-mmX3.4LG-mm	06352	NL322522T-022K
L403	9140-1100	1	INDUCTOR 330nH +-5% 2.8W-mmX3.4LG-mm	09891	KL32TER33J
L404	9140-1100	1	INDUCTOR 330nH +-5% 2.8W-mmX3.4LG-mm	09891	KL32TER33J
L405	9140-1121	1	INDUCTOR 100uH +-5% 3.4W-mmX4.8LG-mm	06352	NL453232T-101J
L406	9140-1425	1	INDUCTOR 270nH +-5% 2.8W-mmX3.4LG-mm	06352	NL322522T-R27J
L407	9140-1425	1	INDUCTOR 270nH +-5% 2.8W-mmX3.4LG-mm	06352	NL322522T-R27J
L408	9140-1121	1	INDUCTOR 100uH +-5% 3.4W-mmX4.8LG-mm	06352	NL453232T-101J
L410	9140-1100	1	INDUCTOR 330nH +-5% 2.8W-mmX3.4LG-mm	09891	KL32TER33J
L411	9140-1101	1	INDUCTOR 470nH +-5% 2.8W-mmX3.4LG-mm	09891	KL32TER47J
L412	9140-1100	1	INDUCTOR 330nH +-5% 2.8W-mmX3.4LG-mm	09891	KL32TER33J
L413	9140-1101	1	INDUCTOR 470nH +-5% 2.8W-mmX3.4LG-mm	09891	KL32TER47J
L415	9140-1427	1	INDUCTOR 120nH +-5% 2.8W-mmX3.4LG-mm	09891	KL32TER12J
L416	9140-1195	1	INDUCTOR 15nH +-10% 2.8W-mmX3.4LG-mm	06352	NL322522T-015K
L417	9140-1099	1	INDUCTOR 220nH +-5% 2.8W-mmX3.4LG-mm	09891	KL32TER22J
L418	9140-1103	1	INDUCTOR 680nH +-5% 2.8W-mmX3.4LG-mm	06352	NL322522T-R68J
L419	9140-1436	1	INDUCTOR 390nH +-5% 2.8W-mmX3.4LG-mm	06352	NL322522T-R39J
L420	9140-1200	1	INDUCTOR 33nH +-5% 2.8W-mmX3.4LG-mm Q25	09891	KL32TE033J
L421	9140-1430	1	INDUCTOR 12uH +-5% 3.4W-mmX4.8LG-mm Q50	28480	9140-1430
L422	9140-1099	1	INDUCTOR 220nH +-5% 2.8W-mmX3.4LG-mm	09891	KL32TER22J
L423	9140-1436	1	INDUCTOR 390nH +-5% 2.8W-mmX3.4LG-mm	06352	NL322522T-R39J
L424	9140-1537	1	INDUCTOR 22nH +-10% 2.8W-mmX3.4LG-mm	06352	NL322522T-022K
L425	9140-1103	1	INDUCTOR 680nH +-5% 2.8W-mmX3.4LG-mm	06352	NL322522T-R68J
L426	9140-1099	1	INDUCTOR 220nH +-5% 2.8W-mmX3.4LG-mm	09891	KL32TER22J
L427	9140-1430	1	INDUCTOR 12uH +-5% 3.4W-mmX4.8LG-mm Q50	28480	9140-1430
L428	9140-1430	1	INDUCTOR 12uH +-5% 3.4W-mmX4.8LG-mm Q50	28480	9140-1430
L429	9140-1425	1	INDUCTOR 270nH +-5% 2.8W-mmX3.4LG-mm	06352	NL322522T-R27J
L500	9140-1736	1	INDUCTOR 47uH +20% -20% 7.3W-mmX7.3LG-mm	06353	E636CY-470M-P3
L501	9140-1101	1	INDUCTOR 470nH +-5% 2.8W-mmX3.4LG-mm	09891	KL32TER47J
L502	9140-1101	1	INDUCTOR 470nH +-5% 2.8W-mmX3.4LG-mm	09891	KL32TER47J

 **Indicates factory-selected value*

Agilent Part Number E4403-60001
Reference/Third Converter (3.0 Ghz)

Reference Designator	Agilent Part Number	Qty	Description	Mgr Code	Mfr Part Number
L600	9140-1736	1	INDUCTOR 47uH +20% -20% 7.3W-mmX7.3LG-mm	06353	E636CY-470M-P3
L601	9140-1736	1	INDUCTOR 47uH +20% -20% 7.3W-mmX7.3LG-mm	06353	E636CY-470M-P3
L602	9140-1736	1	INDUCTOR 47uH +20% -20% 7.3W-mmX7.3LG-mm	06353	E636CY-470M-P3
L603	9140-1736	1	INDUCTOR 47uH +20% -20% 7.3W-mmX7.3LG-mm	06353	E636CY-470M-P3
L605	9140-1736	1	INDUCTOR 47uH +20% -20% 7.3W-mmX7.3LG-mm	06353	E636CY-470M-P3
L606	9140-1736	1	INDUCTOR 47uH +20% -20% 7.3W-mmX7.3LG-mm	06353	E636CY-470M-P3
L800	9140-1104	1	INDUCTOR 820nH +-5% 2.8W-mmX3.4LG-mm	09891	KL32TER82J
L801	9140-1104	1	INDUCTOR 820nH +-5% 2.8W-mmX3.4LG-mm	09891	KL32TER82J
L802	9140-1104	1	INDUCTOR 820nH +-5% 2.8W-mmX3.4LG-mm	09891	KL32TER82J
L803	9140-1104	1	INDUCTOR 820nH +-5% 2.8W-mmX3.4LG-mm	09891	KL32TER82J
L804	9140-1508	1	INDUCTOR 100uH +-5% 2.8W-mmX3.4LG-mm	06352	NL322522T-101J
L805	9140-1238	1	INDUCTOR 10uH +-5% 2.8W-mmX3.4LG-mm Q30	06352	NL322522T-100J
L806	9140-1422	1	INDUCTOR 1.8uH +-5% 3.4W-mmX4.8LG-mm	28480	9140-1422
L900	9140-1113	1	INDUCTOR 10uH +-5% 3.4W-mmX4.8LG-mm Q50	28480	9140-1113
L901	9140-1425	1	INDUCTOR 270nH +-5% 2.8W-mmX3.4LG-mm	06352	NL322522T-R27J
L902	9140-1194	1	INDUCTOR 10nH +-10% 2.8W-mmX3.4LG-mm	09891	KL32TE010K
L903	9140-1194	1	INDUCTOR 10nH +-10% 2.8W-mmX3.4LG-mm	09891	KL32TE010K
MP2	E4403-20036	1	PLATE-MNTNG FR	28480	E4403-20036
MP3	E4403-00011	1	MTG REAR PLATE	28480	E4403-00011
MP4	2190-0068	1	WASHER-LK INTL T 1/2 IN .505-IN-ID	07606	1924-02NP
MP5	2190-0068	1	WASHER-LK INTL T 1/2 IN .505-IN-ID	07606	1924-02NP
MP6	0590-1310	1	NUT-SPCLY 1/2-28-THD .11-IN-THK .665-WD	03699	0590-1310
MP7	0590-1310	1	NUT-SPCLY 1/2-28-THD .11-IN-THK .665-WD	03699	0590-1310
P1	1250-2788	1	CONNECTOR-RF SMB MALE 50-OHM	05879	903-545J-51P
P2	1250-2788	1	CONNECTOR-RF SMB MALE 50-OHM	05879	903-545J-51P

**Indicates factory-selected value*

Agilent Part Number E4403-60001
Reference/Third Converter (3.0 Ghz)

Reference Designator	Agilent Part Number	Qty	Description	Mgr Code	Mfr Part Number
P3	1250-1512	1	CONNECTOR-RF SMB MALE PC-W-STDFS 50-OHM	01380	1046263-1
P5	1250-1512	1	CONNECTOR-RF SMB MALE PC-W-STDFS 50-OHM	01380	1046263-1
P6	1252-5288	1	CONN-RECT MICRORBN 40-CKT 40-CONT	01380	557100-5
Q1	1854-1108	1	TRANSISTOR NPN SI SOT-23 (TO-236AB)	02037	MMBR901LT1
Q2	1854-1363	1	TRANSISTOR NPN SI SOT-23 (TO-236AB)	02037	MMBR941BLT1
Q3	1854-1083	1	TRANSISTOR NPN SI SOT-23 (TO-236AB)	11699	CMPT5179
Q4	1854-1270	1	TRANSISTOR NPN SI TO-261AA (SOT-223)	02910	PZT2222A
Q6	1853-0724	1	TRANSISTOR PNP SI TO-261AA (SOT-223)	02910	PZT2907A
Q200	1853-0724	1	TRANSISTOR PNP SI TO-261AA (SOT-223)	02910	PZT2907A
Q201	1854-1037	1	TRANSISTOR NPN SI TO-236AA PD350MW	00746	SST3904T116
Q400	1854-1054	1	TRANSISTOR NPN SI SOT-89 (TO-243AB)	02910	BFQ19
Q402	1854-1054	1	TRANSISTOR NPN SI SOT-89 (TO-243AB)	02910	BFQ19
Q403	1854-1054	1	TRANSISTOR NPN SI SOT-89 (TO-243AB)	02910	BFQ19
Q404	1854-1014	1	TRANSISTOR NPN SI TO-236AA PD350MW	36633	MMBT6429LT1
Q405	1853-0567	1	TRANSISTOR PNP SI SOT-23 (TO-236AB)	00746	SST3906T116
Q406	1853-0567	1	TRANSISTOR PNP SI SOT-23 (TO-236AB)	00746	SST3906T116
Q407	1854-1054	1	TRANSISTOR NPN SI SOT-89 (TO-243AB)	02910	BFQ19
Q408	1854-1037	1	TRANSISTOR NPN SI TO-236AA PD350MW	00746	SST3904T116
Q409	1853-0567	1	TRANSISTOR PNP SI SOT-23 (TO-236AB)	00746	SST3906T116
Q410	1854-1278	1	TRANSISTOR NPN SI TO-261AA (SOT-223)	02910	BFG97
Q500	1854-1037	1	TRANSISTOR NPN SI TO-236AA PD350MW	00746	SST3904T116
Q501	1853-0567	1	TRANSISTOR PNP SI SOT-23 (TO-236AB)	00746	SST3906T116
Q502	1853-0567	1	TRANSISTOR PNP SI SOT-23 (TO-236AB)	00746	SST3906T116
Q503	1853-0567	1	TRANSISTOR PNP SI SOT-23 (TO-236AB)	00746	SST3906T116
Q504	1855-0801	1	TRANSISTOR MOSFET P-CHAN E-MODE TO-252AA	36633	MTD2955V
Q505	1854-1037	1	TRANSISTOR NPN SI TO-236AA PD350MW	00746	SST3904T116
Q800	1854-1037	1	TRANSISTOR NPN SI TO-236AA PD350MW	00746	SST3904T116
Q801	1853-0567	1	TRANSISTOR PNP SI SOT-23 (TO-236AB)	00746	SST3906T116

Agilent Part Number E4403-60001
Reference/Third Converter (3.0 Ghz)

Reference Designator	Agilent Part Number	Qty	Description	Mgr Code	Mfr Part Number
Q802	1853-0567	1	TRANSISTOR PNP SI SOT-23 (TO-236AB)	00746	SST3906T116
Q803	1854-1037	1	TRANSISTOR NPN SI TO-236AA PD350MW	00746	SST3904T116
Q804	1853-0612	1	TRANSISTOR PNP SI SOT-23 (TO-236AB)	02910	BFT93
Q805	1854-1270	1	TRANSISTOR NPN SI TO-261AA (SOT-223)	02910	PZT2222A
Q806	1854-1037	1	TRANSISTOR NPN SI TO-236AA PD350MW	00746	SST3904T116
Q807	1854-1037	1	TRANSISTOR NPN SI TO-236AA PD350MW	00746	SST3904T116
Q808	1854-1188	1	TRANSISTOR NPN SI SOT-23 (TO-236AB)	11699	CMPT4401
Q809	1854-1037	1	TRANSISTOR NPN SI TO-236AA PD350MW	00746	SST3904T116
Q810	1854-1037	1	TRANSISTOR NPN SI TO-236AA PD350MW	00746	SST3904T116
Q811	1854-1037	1	TRANSISTOR NPN SI TO-236AA PD350MW	00746	SST3904T116
Q812	1854-1037	1	TRANSISTOR NPN SI TO-236AA PD350MW	00746	SST3904T116
Q813	1854-1037	1	TRANSISTOR NPN SI TO-236AA PD350MW	00746	SST3904T116
Q814	1853-0567	1	TRANSISTOR PNP SI SOT-23 (TO-236AB)	00746	SST3906T116
Q815	1854-1037	1	TRANSISTOR NPN SI TO-236AA PD350MW	00746	SST3904T116
Q817	1853-0567	1	TRANSISTOR PNP SI SOT-23 (TO-236AB)	00746	SST3906T116
Q818	1854-1037	1	TRANSISTOR NPN SI TO-236AA PD350MW	00746	SST3904T116
Q819	1853-0724	1	TRANSISTOR PNP SI TO-261AA (SOT-223)	02910	PZT2907A
R1	0699-3993	1	RESISTOR 100K +-1% .063W TKF TC0+-200	09891	RK73H1J1003F
R2	0699-3963	1	RESISTOR 4.64K +-1% .063W TKF TC0+-200	09891	RK73H1J4641F
R4	0699-3992	1	RESISTOR 90.9K +-1% .063W TKF TC0+-200	09891	RK73H1J9092F
R5	0699-3993	1	RESISTOR 100K +-1% .063W TKF TC0+-200	09891	RK73H1J1003F
R6	0699-3959	1	RESISTOR 3.16K +-1% .063W TKF TC0+-200	00746	MCR03-F-3161
R7	0699-3949	1	RESISTOR 1.21K +-1% .063W TKF TC0+-200	00746	MCR03-F-1211
R8	0699-3931	1	RESISTOR 196 +-1% .063W TKF TC0+-200	09891	RK73H1J1960F
R9	0699-3993	1	RESISTOR 100K +-1% .063W TKF TC0+-200	09891	RK73H1J1003F
R10	0699-3945	1	RESISTOR 825 +-1% .063W TKF TC0+-200	00746	MCR03-F-8250
R11	0699-3939	1	RESISTOR 422 +-1% .063W TKF TC0+-200	09891	RK73H1J4220F
R12	0699-3924	1	RESISTOR 100 +-1% .063W TKF TC0+-200	00746	MCR03-F-1000
R13	0699-4010	1	RESISTOR 511K +-1% .063W TKF TC0+-200	09891	RK73H1J5113F
R14	0699-3970	1	RESISTOR 10K +-1% .063W TKF TC0+-200	09891	RK73H1J1002F

Agilent Part Number E4403-60001
Reference/Third Converter (3.0 Ghz)

Reference Designator	Agilent Part Number	Qty	Description	Mgr Code	Mfr Part Number
R15	0699-3927	1	RESISTOR 133 +-1% .063W TKF TC0+-200	00746	MCR03-F-1330
R16	0699-3947	1	RESISTOR 1K +-1% .063W TKF TC0+-200	00746	MCR03-F-1001
R17	0699-3940	1	RESISTOR 464 +-1% .063W TKF TC0+-200	09891	RK73H1J4640F
R18	0699-3920	1	RESISTOR 68.1 +-1% .063W TKF TC0+-200	09891	RK73H1J68R1F
R20	0699-3945	1	RESISTOR 825 +-1% .063W TKF TC0+-200	00746	MCR03-F-8250
R21	0699-3920	1	RESISTOR 68.1 +-1% .063W TKF TC0+-200	09891	RK73H1J68R1F
R22	0699-3940	1	RESISTOR 464 +-1% .063W TKF TC0+-200	09891	RK73H1J4640F
R23	0699-3953	1	RESISTOR 1.78K +-1% .063W TKF TC0+-200	00746	MCR03-F-1781
R24	0699-3937	1	RESISTOR 348 +-1% .063W TKF TC0+-200	00746	MCR03-F-3480
R25	0699-3920	1	RESISTOR 68.1 +-1% .063W TKF TC0+-200	09891	RK73H1J68R1F
R27	0699-3970	1	RESISTOR 10K +-1% .063W TKF TC0+-200	09891	RK73H1J1002F
R28	0699-3927	1	RESISTOR 133 +-1% .063W TKF TC0+-200	00746	MCR03-F-1330
R29	0699-3918	1	RESISTOR 51.1 +-1% .063W TKF TC0+-200	00746	MCR03-F-51R1
R32	0699-3927	1	RESISTOR 133 +-1% .063W TKF TC0+-200	00746	MCR03-F-1330
R34	0699-3924	1	RESISTOR 100 +-1% .063W TKF TC0+-200	00746	MCR03-F-1000
R35	0699-3954	1	RESISTOR 1.96K +-1% .063W TKF TC0+-200	09891	RK73H1J1961F
R36	0699-3924	1	RESISTOR 100 +-1% .063W TKF TC0+-200	00746	MCR03-F-1000
R38	0699-3929	1	RESISTOR 162 +-1% .063W TKF TC0+-200	09891	RK73H1J1620F
R39	0699-3954	1	RESISTOR 1.96K +-1% .063W TKF TC0+-200	09891	RK73H1J1961F
R100	0699-3970	1	RESISTOR 10K +-1% .063W TKF TC0+-200	09891	RK73H1J1002F
R101	0699-3969	1	RESISTOR 9.09K +-1% .063W TKF TC0+-200	09891	RK73H1J9091F
R102	0699-3947	1	RESISTOR 1K +-1% .063W TKF TC0+-200	00746	MCR03-F-1001
R103	0699-3974	1	RESISTOR 14.7K +-1% .063W TKF TC0+-200	00746	MCR03-F-1472
R104	0699-3993	1	RESISTOR 100K +-1% .063W TKF TC0+-200	09891	RK73H1J1003F
R105	0699-3947	1	RESISTOR 1K +-1% .063W TKF TC0+-200	00746	MCR03-F-1001
R106	0699-3972	1	RESISTOR 12.1K +-1% .063W TKF TC0+-200	09891	RK73H1J1212F
R107	0699-3967	1	RESISTOR 7.5K +-1% .063W TKF TC0+-200	09891	RK73H1J7501F
R108	0699-3950	1	RESISTOR 1.33K +-1% .063W TKF TC0+-200	09891	RK73H1J1331F
R109	0699-3968	1	RESISTOR 8.25K +-1% .063W TKF TC0+-200	09891	RK73H1J8251F
R111	0699-3986	1	RESISTOR 46.4K +-1% .063W TKF TC0+-200	09891	RK73H1J4642F

 **Indicates factory-selected value*

Agilent Part Number E4403-60001
Reference/Third Converter (3.0 Ghz)

Reference Designator	Agilent Part Number	Qty	Description	Mgr Code	Mfr Part Number
R112	0699-3986	1	RESISTOR 46.4K +-1% .063W TKF TC0+-200	09891	RK73H1J4642F
R113	0699-3950	1	RESISTOR 1.33K +-1% .063W TKF TC0+-200	09891	RK73H1J1331F
R114	0699-3962	1	RESISTOR 4.22K +-1% .063W TKF TC0+-200	09891	RK73H1J4221F
R115	0699-3963	1	RESISTOR 4.64K +-1% .063W TKF TC0+-200	09891	RK73H1J4641F
R117	0699-3931	1	RESISTOR 196 +-1% .063W TKF TC0+-200	09891	RK73H1J1960F
R118	0699-3931	1	RESISTOR 196 +-1% .063W TKF TC0+-200	09891	RK73H1J1960F
R119	0699-3931	1	RESISTOR 196 +-1% .063W TKF TC0+-200	09891	RK73H1J1960F
R120	0699-3931	1	RESISTOR 196 +-1% .063W TKF TC0+-200	09891	RK73H1J1960F
R121	0699-3950	1	RESISTOR 1.33K +-1% .063W TKF TC0+-200	09891	RK73H1J1331F
R122	0699-3950	1	RESISTOR 1.33K +-1% .063W TKF TC0+-200	09891	RK73H1J1331F
R123	0699-3970	1	RESISTOR 10K +-1% .063W TKF TC0+-200	09891	RK73H1J1002F
R124	0699-3941	1	RESISTOR 511 +-1% .063W TKF TC0+-200	00746	MCR03-F-5110
R125	0699-3945	1	RESISTOR 825 +-1% .063W TKF TC0+-200	00746	MCR03-F-8250
R200	0699-3918	1	RESISTOR 51.1 +-1% .063W TKF TC0+-200	00746	MCR03-F-51R1
R201	0699-3936	1	RESISTOR 316 +-1% .063W TKF TC0+-200	00746	MCR03-F-3160
R202	0699-3993	1	RESISTOR 100K +-1% .063W TKF TC0+-200	09891	RK73H1J1003F
R204	0699-3947	1	RESISTOR 1K +-1% .063W TKF TC0+-200	00746	MCR03-F-1001
R205	0699-3918	1	RESISTOR 51.1 +-1% .063W TKF TC0+-200	00746	MCR03-F-51R1
R206	0699-3918	1	RESISTOR 51.1 +-1% .063W TKF TC0+-200	00746	MCR03-F-51R1
R207	0699-3992	1	RESISTOR 90.9K +-1% .063W TKF TC0+-200	09891	RK73H1J9092F
R208	0699-3918	1	RESISTOR 51.1 +-1% .063W TKF TC0+-200	00746	MCR03-F-51R1
R209	0699-3918	1	RESISTOR 51.1 +-1% .063W TKF TC0+-200	00746	MCR03-F-51R1
R210	0699-3993	1	RESISTOR 100K +-1% .063W TKF TC0+-200	09891	RK73H1J1003F
R211	0699-3918	1	RESISTOR 51.1 +-1% .063W TKF TC0+-200	00746	MCR03-F-51R1
R212	0699-3918	1	RESISTOR 51.1 +-1% .063W TKF TC0+-200	00746	MCR03-F-51R1
R213	0699-3993	1	RESISTOR 100K +-1% .063W TKF TC0+-200	09891	RK73H1J1003F
R214	0699-3970	1	RESISTOR 10K +-1% .063W TKF TC0+-200	09891	RK73H1J1002F
R215	0699-3963	1	RESISTOR 4.64K +-1% .063W TKF TC0+-200	09891	RK73H1J4641F
R216	0699-3930	1	RESISTOR 178 +-1% .063W TKF TC0+-200	00746	MCR03-F-1780
R217	0699-3930	1	RESISTOR 178 +-1% .063W TKF TC0+-200	00746	MCR03-F-1780

Agilent Part Number E4403-60001
Reference/Third Converter (3.0 Ghz)

Reference Designator	Agilent Part Number	Qty	Description	Mgr Code	Mfr Part Number
R218	0699-3965	1	RESISTOR 6.19K +-1% .063W TKF TC0+-200	09891	RK73H1J6191F
R219	0699-3964	1	RESISTOR 5.11K +-1% .063W TKF TC0+-200	09891	RK73H1J5111F
R220	0699-3930	1	RESISTOR 178 +-1% .063W TKF TC0+-200	00746	MCR03-F-1780
R221	0699-3930	1	RESISTOR 178 +-1% .063W TKF TC0+-200	00746	MCR03-F-1780
R222	0699-3970	1	RESISTOR 10K +-1% .063W TKF TC0+-200	09891	RK73H1J1002F
R223	0699-3964	1	RESISTOR 5.11K +-1% .063W TKF TC0+-200	09891	RK73H1J5111F
R224	0699-3964	1	RESISTOR 5.11K +-1% .063W TKF TC0+-200	09891	RK73H1J5111F
R225	0699-3970	1	RESISTOR 10K +-1% .063W TKF TC0+-200	09891	RK73H1J1002F
R226	0699-3918	1	RESISTOR 51.1 +-1% .063W TKF TC0+-200	00746	MCR03-F-51R1
R227	0699-3918	1	RESISTOR 51.1 +-1% .063W TKF TC0+-200	00746	MCR03-F-51R1
R228	0699-3964	1	RESISTOR 5.11K +-1% .063W TKF TC0+-200	09891	RK73H1J5111F
R229	0699-3970	1	RESISTOR 10K +-1% .063W TKF TC0+-200	09891	RK73H1J1002F
R230	0699-3965	1	RESISTOR 6.19K +-1% .063W TKF TC0+-200	09891	RK73H1J6191F
R231	0699-3967	1	RESISTOR 7.5K +-1% .063W TKF TC0+-200	09891	RK73H1J7501F
R232	0699-3947	1	RESISTOR 1K +-1% .063W TKF TC0+-200	00746	MCR03-F-1001
R233	0699-3954	1	RESISTOR 1.96K +-1% .063W TKF TC0+-200	09891	RK73H1J1961F
R234	0699-3931	1	RESISTOR 196 +-1% .063W TKF TC0+-200	09891	RK73H1J1960F
R235	0699-3947	1	RESISTOR 1K +-1% .063W TKF TC0+-200	00746	MCR03-F-1001
R236	0699-3941	1	RESISTOR 511 +-1% .063W TKF TC0+-200	00746	MCR03-F-5110
R237	0699-3918	1	RESISTOR 51.1 +-1% .063W TKF TC0+-200	00746	MCR03-F-51R1
R238	0699-3947	1	RESISTOR 1K +-1% .063W TKF TC0+-200	00746	MCR03-F-1001
R239	0699-3941	1	RESISTOR 511 +-1% .063W TKF TC0+-200	00746	MCR03-F-5110
R240	0699-3941	1	RESISTOR 511 +-1% .063W TKF TC0+-200	00746	MCR03-F-5110
R241	0699-3933	1	RESISTOR 237 +-1% .063W TKF TC0+-200	00746	MCR03-F-2370
R242	0699-3941	1	RESISTOR 511 +-1% .063W TKF TC0+-200	00746	MCR03-F-5110
R243	0699-3366	1	RESISTOR 562 +-1% .065W TKF TC0+-200	09891	RK73H1J5620F
R244	0699-3939	1	RESISTOR 422 +-1% .063W TKF TC0+-200	09891	RK73H1J4220F
R245	0699-3993	1	RESISTOR 100K +-1% .063W TKF TC0+-200	09891	RK73H1J1003F
R300	0699-3916	1	RESISTOR 42.2 +-1% .063W TKF TC0+-200	09891	RK73H1J42R2F
R301	0699-3901	1	RESISTOR 10 +-1% .063W TKF TC0+-200	00746	MCR03-F-10R0

 **Indicates factory-selected value*

Agilent Part Number E4403-60001
Reference/Third Converter (3.0 Ghz)

Reference Designator	Agilent Part Number	Qty	Description	Mgr Code	Mfr Part Number
R302	0699-3901	1	RESISTOR 10 +-1% .063W TKF TC0+-200	00746	MCR03-F-10R0
R304	0699-2890	1	RESISTOR 3.3 +-5% .125W TKF TC0+-300	00746	MCR18-J-3R3
R305	0699-3937	1	RESISTOR 348 +-1% .063W TKF TC0+-200	00746	MCR03-F-3480
R309	0699-3944	1	RESISTOR 750 +-1% .063W TKF TC0+-200	09891	RK73H1J7500F
R310	0699-3901	1	RESISTOR 10 +-1% .063W TKF TC0+-200	00746	MCR03-F-10R0
R311	0699-3926	1	RESISTOR 121 +-1% .063W TKF TC0+-200	00746	MCR03-F-1210
R314	0699-3574	1	RESISTOR 0 .0625W TKF	09891	RM73Z1JT
R315	0699-3901	1	RESISTOR 10 +-1% .063W TKF TC0+-200	00746	MCR03-F-10R0
R316	0699-3574	1	RESISTOR 0 .0625W TKF	09891	RM73Z1JT
R319	0699-3925	1	RESISTOR 110 +-1% .063W TKF TC0+-200	00746	MCR03-F-1100
R321	0699-3937	1	RESISTOR 348 +-1% .063W TKF TC0+-200	00746	MCR03-F-3480
R322	0699-3924	1	RESISTOR 100 +-1% .063W TKF TC0+-200	00746	MCR03-F-1000
R323	0699-3919	1	RESISTOR 61.9 +-1% .063W TKF TC0+-200	05524	CRCW060361R9F
R324	0699-3919	1	RESISTOR 61.9 +-1% .063W TKF TC0+-200	05524	CRCW060361R9F
R325	0699-3916	1	RESISTOR 42.2 +-1% .063W TKF TC0+-200	09891	RK73H1J42R2F
R326	0699-3916	1	RESISTOR 42.2 +-1% .063W TKF TC0+-200	09891	RK73H1J42R2F
R327	0699-1359	1	RESISTOR 42.2 +-1% .125W TKF TC0+-100	05524	CRCW120642R2F
R328	0699-2890	1	RESISTOR 3.3 +-5% .125W TKF TC0+-300	00746	MCR18-J-3R3
R330	0699-3574	1	RESISTOR 0 .0625W TKF	09891	RM73Z1JT
R331	0699-3908	1	RESISTOR 19.6 +-1% .063W TKF TC0+-200	09891	RK73H1J19R6F
R332	0699-3908	1	RESISTOR 19.6 +-1% .063W TKF TC0+-200	09891	RK73H1J19R6F
R333	0699-3919	1	RESISTOR 61.9 +-1% .063W TKF TC0+-200	05524	CRCW060361R9F
R335	0699-3924	1	RESISTOR 100 +-1% .063W TKF TC0+-200	00746	MCR03-F-1000
R336	0699-3365	1	RESISTOR 56.2 +-1% .065W TKF TC0+-200	09891	RK73H1J56R2F
R337	0699-3916	1	RESISTOR 42.2 +-1% .063W TKF TC0+-200	09891	RK73H1J42R2F
R338	0699-3919	1	RESISTOR 61.9 +-1% .063W TKF TC0+-200	05524	CRCW060361R9F
R400	0699-3934	1	RESISTOR 261 +-1% .063W TKF TC0+-200	09891	RK73H1J2610F
R401	0699-3934	1	RESISTOR 261 +-1% .063W TKF TC0+-200	09891	RK73H1J2610F
R402	0699-3908	1	RESISTOR 19.6 +-1% .063W TKF TC0+-200	09891	RK73H1J19R6F
R403	0699-3947	1	RESISTOR 1K +-1% .063W TKF TC0+-200	00746	MCR03-F-1001

Agilent Part Number E4403-60001
Reference/Third Converter (3.0 Ghz)

Reference Designator	Agilent Part Number	Qty	Description	Mgr Code	Mfr Part Number
R409	0699-3957	1	RESISTOR 2.61K +-1% .063W TKF TC0+-200	09891	RK73H1J2611F
R411	0699-3934	1	RESISTOR 261 +-1% .063W TKF TC0+-200	09891	RK73H1J2610F
R412	0699-3934	1	RESISTOR 261 +-1% .063W TKF TC0+-200	09891	RK73H1J2610F
R413	0699-3957	1	RESISTOR 2.61K +-1% .063W TKF TC0+-200	09891	RK73H1J2611F
R414	0699-3947	1	RESISTOR 1K +-1% .063W TKF TC0+-200	00746	MCR03-F-1001
R415	0699-3908	1	RESISTOR 19.6 +-1% .063W TKF TC0+-200	09891	RK73H1J19R6F
R416	0699-3934	1	RESISTOR 261 +-1% .063W TKF TC0+-200	09891	RK73H1J2610F
R417	0699-3934	1	RESISTOR 261 +-1% .063W TKF TC0+-200	09891	RK73H1J2610F
R418	0699-3957	1	RESISTOR 2.61K +-1% .063W TKF TC0+-200	09891	RK73H1J2611F
R419	0699-3947	1	RESISTOR 1K +-1% .063W TKF TC0+-200	00746	MCR03-F-1001
R420	0699-3908	1	RESISTOR 19.6 +-1% .063W TKF TC0+-200	09891	RK73H1J19R6F
R421	0699-3932	1	RESISTOR 215 +-1% .063W TKF TC0+-200	00746	MCR03-F-2150
R422	0699-3924	1	RESISTOR 100 +-1% .063W TKF TC0+-200	00746	MCR03-F-1000
R423	0699-3970	1	RESISTOR 10K +-1% .063W TKF TC0+-200	09891	RK73H1J1002F
R424	0699-3970	1	RESISTOR 10K +-1% .063W TKF TC0+-200	09891	RK73H1J1002F
R425	0699-3947	1	RESISTOR 1K +-1% .063W TKF TC0+-200	00746	MCR03-F-1001
R426	0699-2889	1	RESISTOR 4.7 +-5% .125W TKF TC0+-500	00746	MCR18-J-4R7
R427	0699-2889	1	RESISTOR 4.7 +-5% .125W TKF TC0+-500	00746	MCR18-J-4R7
R428	0699-3924	1	RESISTOR 100 +-1% .063W TKF TC0+-200	00746	MCR03-F-1000
R429	0699-3947	1	RESISTOR 1K +-1% .063W TKF TC0+-200	00746	MCR03-F-1001
R430	0699-3970	1	RESISTOR 10K +-1% .063W TKF TC0+-200	09891	RK73H1J1002F
R431	0699-3924	1	RESISTOR 100 +-1% .063W TKF TC0+-200	00746	MCR03-F-1000
R432	0699-3970	1	RESISTOR 10K +-1% .063W TKF TC0+-200	09891	RK73H1J1002F
R433	0699-3934	1	RESISTOR 261 +-1% .063W TKF TC0+-200	09891	RK73H1J2610F
R434	0699-3934	1	RESISTOR 261 +-1% .063W TKF TC0+-200	09891	RK73H1J2610F
R435	0699-3924	1	RESISTOR 100 +-1% .063W TKF TC0+-200	00746	MCR03-F-1000
R436	0699-3970	1	RESISTOR 10K +-1% .063W TKF TC0+-200	09891	RK73H1J1002F
R437	0699-3947	1	RESISTOR 1K +-1% .063W TKF TC0+-200	00746	MCR03-F-1001
R438	0699-3947	1	RESISTOR 1K +-1% .063W TKF TC0+-200	00746	MCR03-F-1001
R439	0699-3947	1	RESISTOR 1K +-1% .063W TKF TC0+-200	00746	MCR03-F-1001

 **Indicates factory-selected value*

Agilent Part Number E4403-60001
Reference/Third Converter (3.0 Ghz)

Reference Designator	Agilent Part Number	Qty	Description	Mgr Code	Mfr Part Number
R440	0699-3937	1	RESISTOR 348 +-1% .063W TKF TC0+-200	00746	MCR03-F-3480
R441	0699-3932	1	RESISTOR 215 +-1% .063W TKF TC0+-200	00746	MCR03-F-2150
R442	0699-3957	1	RESISTOR 2.61K +-1% .063W TKF TC0+-200	09891	RK73H1J2611F
R443	0699-3918	1	RESISTOR 51.1 +-1% .063W TKF TC0+-200	00746	MCR03-F-51R1
R445	0699-3947	1	RESISTOR 1K +-1% .063W TKF TC0+-200	00746	MCR03-F-1001
R446	0699-3908	1	RESISTOR 19.6 +-1% .063W TKF TC0+-200	09891	RK73H1J19R6F
R447	0699-3913	1	RESISTOR 31.6 +-1% .063W TKF TC0+-200	09891	RK73H1J31R6F
R448	0699-3937	1	RESISTOR 348 +-1% .063W TKF TC0+-200	00746	MCR03-F-3480
R449	0699-3937	1	RESISTOR 348 +-1% .063W TKF TC0+-200	00746	MCR03-F-3480
R450	0699-3937	1	RESISTOR 348 +-1% .063W TKF TC0+-200	00746	MCR03-F-3480
R451	0699-3947	1	RESISTOR 1K +-1% .063W TKF TC0+-200	00746	MCR03-F-1001
R452	0699-3947	1	RESISTOR 1K +-1% .063W TKF TC0+-200	00746	MCR03-F-1001
R453	0699-3918	1	RESISTOR 51.1 +-1% .063W TKF TC0+-200	00746	MCR03-F-51R1
R454	0699-3918	1	RESISTOR 51.1 +-1% .063W TKF TC0+-200	00746	MCR03-F-51R1
R456	0699-3927	1	RESISTOR 133 +-1% .063W TKF TC0+-200	00746	MCR03-F-1330
R457	0699-3917	1	RESISTOR 46.4 +-1% .063W TKF TC0+-200	09891	RK73H1J46R4F
R458	0699-3927	1	RESISTOR 133 +-1% .063W TKF TC0+-200	00746	MCR03-F-1330
R459	0699-3947	1	RESISTOR 1K +-1% .063W TKF TC0+-200	00746	MCR03-F-1001
R500	0699-1415	1	RESISTOR 100 +-1% .125W TKF TC0+-100	05524	CRCW12061000F
R501	0699-1415	1	RESISTOR 100 +-1% .125W TKF TC0+-100	05524	CRCW12061000F
R502	0699-1415	1	RESISTOR 100 +-1% .125W TKF TC0+-100	05524	CRCW12061000F
R503	0699-1415	1	RESISTOR 100 +-1% .125W TKF TC0+-100	05524	CRCW12061000F
R504	0699-3970	1	RESISTOR 10K +-1% .063W TKF TC0+-200	09891	RK73H1J1002F
R505	0699-3970	1	RESISTOR 10K +-1% .063W TKF TC0+-200	09891	RK73H1J1002F
R506	0699-3947	1	RESISTOR 1K +-1% .063W TKF TC0+-200	00746	MCR03-F-1001
R507	0699-3970	1	RESISTOR 10K +-1% .063W TKF TC0+-200	09891	RK73H1J1002F
R508	0699-3970	1	RESISTOR 10K +-1% .063W TKF TC0+-200	09891	RK73H1J1002F
R509	0699-3970	1	RESISTOR 10K +-1% .063W TKF TC0+-200	09891	RK73H1J1002F
R510	0699-3970	1	RESISTOR 10K +-1% .063W TKF TC0+-200	09891	RK73H1J1002F
R511	0699-3964	1	RESISTOR 5.11K +-1% .063W TKF TC0+-200	09891	RK73H1J5111F

Agilent Part Number E4403-60001
Reference/Third Converter (3.0 Ghz)

Reference Designator	Agilent Part Number	Qty	Description	Mgr Code	Mfr Part Number
R512	0699-3964	1	RESISTOR 5.11K +-1% .063W TKF TC0+-200	09891	RK73H1J5111F
R513	0699-3974	1	RESISTOR 14.7K +-1% .063W TKF TC0+-200	00746	MCR03-F-1472
R514	0699-3947	1	RESISTOR 1K +-1% .063W TKF TC0+-200	00746	MCR03-F-1001
R515	0699-3947	1	RESISTOR 1K +-1% .063W TKF TC0+-200	00746	MCR03-F-1001
R516	0699-3947	1	RESISTOR 1K +-1% .063W TKF TC0+-200	00746	MCR03-F-1001
R517	0699-3964	1	RESISTOR 5.11K +-1% .063W TKF TC0+-200	09891	RK73H1J5111F
R518	0699-3964	1	RESISTOR 5.11K +-1% .063W TKF TC0+-200	09891	RK73H1J5111F
R539	0699-3970	1	RESISTOR 10K +-1% .063W TKF TC0+-200	09891	RK73H1J1002F
R550	0699-3993	1	RESISTOR 100K +-1% .063W TKF TC0+-200	09891	RK73H1J1003F
R551	0699-3970	1	RESISTOR 10K +-1% .063W TKF TC0+-200	09891	RK73H1J1002F
R600	0699-3932	1	RESISTOR 215 +-1% .063W TKF TC0+-200	00746	MCR03-F-2150
R601	0699-3932	1	RESISTOR 215 +-1% .063W TKF TC0+-200	00746	MCR03-F-2150
R602	0699-3932	1	RESISTOR 215 +-1% .063W TKF TC0+-200	00746	MCR03-F-2150
R603	0699-3932	1	RESISTOR 215 +-1% .063W TKF TC0+-200	00746	MCR03-F-2150
R604	0699-3914	1	RESISTOR 34.8 +-1% .063W TKF TC0+-200	00746	MCR03-F-34R8
R605	0699-3932	1	RESISTOR 215 +-1% .063W TKF TC0+-200	00746	MCR03-F-2150
R606	0699-3927	1	RESISTOR 133 +-1% .063W TKF TC0+-200	00746	MCR03-F-1330
R607	0699-3927	1	RESISTOR 133 +-1% .063W TKF TC0+-200	00746	MCR03-F-1330
R610	0699-3934	1	RESISTOR 261 +-1% .063W TKF TC0+-200	09891	RK73H1J2610F
R611	0699-3970	1	RESISTOR 10K +-1% .063W TKF TC0+-200	09891	RK73H1J1002F
R701	0699-3924	1	RESISTOR 100 +-1% .063W TKF TC0+-200	00746	MCR03-F-1000
R702	0699-3924	1	RESISTOR 100 +-1% .063W TKF TC0+-200	00746	MCR03-F-1000
R704	0699-3965	1	RESISTOR 6.19K +-1% .063W TKF TC0+-200	09891	RK73H1J6191F
R706	0699-3924	1	RESISTOR 100 +-1% .063W TKF TC0+-200	00746	MCR03-F-1000
R707	0699-3924	1	RESISTOR 100 +-1% .063W TKF TC0+-200	00746	MCR03-F-1000
R708	0699-3924	1	RESISTOR 100 +-1% .063W TKF TC0+-200	00746	MCR03-F-1000
R800	0699-3938	1	RESISTOR 383 +-1% .063W TKF TC0+-200	00746	MCR03-F-3830
R801	0699-3938	1	RESISTOR 383 +-1% .063W TKF TC0+-200	00746	MCR03-F-3830
R802	0699-3901	1	RESISTOR 10 +-1% .063W TKF TC0+-200	00746	MCR03-F-10R0
R803	0699-3934	1	RESISTOR 261 +-1% .063W TKF TC0+-200	09891	RK73H1J2610F

 **Indicates factory-selected value*

Agilent Part Number E4403-60001
Reference/Third Converter (3.0 Ghz)

Reference Designator	Agilent Part Number	Qty	Description	Mgr Code	Mfr Part Number
R804	0699-3938	1	RESISTOR 383 +-1% .063W TKF TC0+-200	00746	MCR03-F-3830
R805	0699-3967	1	RESISTOR 7.5K +-1% .063W TKF TC0+-200	09891	RK73H1J7501F
R806	0699-3918	1	RESISTOR 51.1 +-1% .063W TKF TC0+-200	00746	MCR03-F-51R1
R807	0699-3970	1	RESISTOR 10K +-1% .063W TKF TC0+-200	09891	RK73H1J1002F
R808	0699-3921	1	RESISTOR 75 +-1% .063W TKF TC0+-200	00746	MCR03-F-75R0
R809	0699-3947	1	RESISTOR 1K +-1% .063W TKF TC0+-200	00746	MCR03-F-1001
R810	0699-2489	1	RESISTOR 10K +-0.1% .125W TF TC0+-25	01172	BLU-1206 10K .1% 25PPM
R811	0699-3918	1	RESISTOR 51.1 +-1% .063W TKF TC0+-200	00746	MCR03-F-51R1
R812	0699-3970	1	RESISTOR 10K +-1% .063W TKF TC0+-200	09891	RK73H1J1002F
R813	0699-3961	1	RESISTOR 3.83K +-1% .063W TKF TC0+-200	09891	RK73H1J3831F
R814	0699-2489	1	RESISTOR 10K +-0.1% .125W TF TC0+-25	01172	BLU-1206 10K .1% 25PPM
R815	0699-3975	1	RESISTOR 16.2K +-1% .063W TKF TC0+-200	09891	RK73H1J1622F
R816	0699-3941	1	RESISTOR 511 +-1% .063W TKF TC0+-200	00746	MCR03-F-5110
R817	0699-3934	1	RESISTOR 261 +-1% .063W TKF TC0+-200	09891	RK73H1J2610F
R818	0699-3918	1	RESISTOR 51.1 +-1% .063W TKF TC0+-200	00746	MCR03-F-51R1
R819	0699-3947	1	RESISTOR 1K +-1% .063W TKF TC0+-200	00746	MCR03-F-1001
R820	0699-3931	1	RESISTOR 196 +-1% .063W TKF TC0+-200	09891	RK73H1J1960F
R821	0699-3970	1	RESISTOR 10K +-1% .063W TKF TC0+-200	09891	RK73H1J1002F
R822	0699-3924	1	RESISTOR 100 +-1% .063W TKF TC0+-200	00746	MCR03-F-1000
R823	0699-3970	1	RESISTOR 10K +-1% .063W TKF TC0+-200	09891	RK73H1J1002F
R824	0699-3941	1	RESISTOR 511 +-1% .063W TKF TC0+-200	00746	MCR03-F-5110
R825	0699-3948	1	RESISTOR 1.1K +-1% .063W TKF TC0+-200	00746	MCR03-F-1101
R826	0699-3964	1	RESISTOR 5.11K +-1% .063W TKF TC0+-200	09891	RK73H1J5111F
R828	0699-3918	1	RESISTOR 51.1 +-1% .063W TKF TC0+-200	00746	MCR03-F-51R1
R829	0699-3947	1	RESISTOR 1K +-1% .063W TKF TC0+-200	00746	MCR03-F-1001
R830	0699-3939	1	RESISTOR 422 +-1% .063W TKF TC0+-200	09891	RK73H1J4220F
R831	0699-3941	1	RESISTOR 511 +-1% .063W TKF TC0+-200	00746	MCR03-F-5110
R832	0699-3918	1	RESISTOR 51.1 +-1% .063W TKF TC0+-200	00746	MCR03-F-51R1

Agilent Part Number E4403-60001
Reference/Third Converter (3.0 Ghz)

Reference Designator	Agilent Part Number	Qty	Description	Mgr Code	Mfr Part Number
R833	0699-3964	1	RESISTOR 5.11K +-1% .063W TKF TC0+-200	09891	RK73H1J5111F
R834	0699-3970	1	RESISTOR 10K +-1% .063W TKF TC0+-200	09891	RK73H1J1002F
R835	0699-3939	1	RESISTOR 422 +-1% .063W TKF TC0+-200	09891	RK73H1J4220F
R836	0699-3901	1	RESISTOR 10 +-1% .063W TKF TC0+-200	00746	MCR03-F-10R0
R837	0699-3973	1	RESISTOR 13.3K +-1% .063W TKF TC0+-200	09891	RK73H1J1332F
R838	0699-3970	1	RESISTOR 10K +-1% .063W TKF TC0+-200	09891	RK73H1J1002F
R839	0699-3970	1	RESISTOR 10K +-1% .063W TKF TC0+-200	09891	RK73H1J1002F
R840	0699-3964	1	RESISTOR 5.11K +-1% .063W TKF TC0+-200	09891	RK73H1J5111F
R841	0699-3970	1	RESISTOR 10K +-1% .063W TKF TC0+-200	09891	RK73H1J1002F
R842	0699-3941	1	RESISTOR 511 +-1% .063W TKF TC0+-200	00746	MCR03-F-5110
R843	0699-3918	1	RESISTOR 51.1 +-1% .063W TKF TC0+-200	00746	MCR03-F-51R1
R844	0699-3964	1	RESISTOR 5.11K +-1% .063W TKF TC0+-200	09891	RK73H1J5111F
R845	0699-3918	1	RESISTOR 51.1 +-1% .063W TKF TC0+-200	00746	MCR03-F-51R1
R846	0699-3970	1	RESISTOR 10K +-1% .063W TKF TC0+-200	09891	RK73H1J1002F
R847	0699-3961	1	RESISTOR 3.83K +-1% .063W TKF TC0+-200	09891	RK73H1J3831F
R848	0699-3918	1	RESISTOR 51.1 +-1% .063W TKF TC0+-200	00746	MCR03-F-51R1
R849	0699-3939	1	RESISTOR 422 +-1% .063W TKF TC0+-200	09891	RK73H1J4220F
R850	0699-3970	1	RESISTOR 10K +-1% .063W TKF TC0+-200	09891	RK73H1J1002F
R851	0699-3918	1	RESISTOR 51.1 +-1% .063W TKF TC0+-200	00746	MCR03-F-51R1
R852	0699-3970	1	RESISTOR 10K +-1% .063W TKF TC0+-200	09891	RK73H1J1002F
R853	0699-3901	1	RESISTOR 10 +-1% .063W TKF TC0+-200	00746	MCR03-F-10R0
R854	0699-3999	1	RESISTOR 178K +-1% .063W TKF TC0+-200	09891	RK73H1J1783F
R855	0699-3954	1	RESISTOR 1.96K +-1% .063W TKF TC0+-200	09891	RK73H1J1961F
R856	0699-3954	1	RESISTOR 1.96K +-1% .063W TKF TC0+-200	09891	RK73H1J1961F
R857	0699-3938	1	RESISTOR 383 +-1% .063W TKF TC0+-200	00746	MCR03-F-3830
R858	0699-3940	1	RESISTOR 464 +-1% .063W TKF TC0+-200	09891	RK73H1J4640F
R859	0699-3970	1	RESISTOR 10K +-1% .063W TKF TC0+-200	09891	RK73H1J1002F
R860	0699-3910	1	RESISTOR 23.7 +-1% .063W TKF TC0+-200	09891	RK73H1J23R7F
R861	0699-3970	1	RESISTOR 10K +-1% .063W TKF TC0+-200	09891	RK73H1J1002F
R862	0699-3955	1	RESISTOR 2.15K +-1% .063W TKF TC0+-200	09891	RK73H1J2151F

 **Indicates factory-selected value*

Agilent Part Number E4403-60001
Reference/Third Converter (3.0 Ghz)

Reference Designator	Agilent Part Number	Qty	Description	Mgr Code	Mfr Part Number
R863	0699-1436	1	RESISTOR 750 +-1% .125W TKF TC0+-100	09891	RK73H2BT7500F
R864	0699-3970	1	RESISTOR 10K +-1% .063W TKF TC0+-200	09891	RK73H1J1002F
R865	0699-3964	1	RESISTOR 5.11K +-1% .063W TKF TC0+-200	09891	RK73H1J5111F
R866	0699-3970	1	RESISTOR 10K +-1% .063W TKF TC0+-200	09891	RK73H1J1002F
R867	0699-3941	1	RESISTOR 511 +-1% .063W TKF TC0+-200	00746	MCR03-F-5110
R868	0699-3970	1	RESISTOR 10K +-1% .063W TKF TC0+-200	09891	RK73H1J1002F
R869	0699-3918	1	RESISTOR 51.1 +-1% .063W TKF TC0+-200	00746	MCR03-F-51R1
R870	0699-3918	1	RESISTOR 51.1 +-1% .063W TKF TC0+-200	00746	MCR03-F-51R1
R871	0699-3910	1	RESISTOR 23.7 +-1% .063W TKF TC0+-200	09891	RK73H1J23R7F
R872	0699-3941	1	RESISTOR 511 +-1% .063W TKF TC0+-200	00746	MCR03-F-5110
R873	0699-3964	1	RESISTOR 5.11K +-1% .063W TKF TC0+-200	09891	RK73H1J5111F
R874	0699-3969	1	RESISTOR 9.09K +-1% .063W TKF TC0+-200	09891	RK73H1J9091F
R875	0699-3918	1	RESISTOR 51.1 +-1% .063W TKF TC0+-200	00746	MCR03-F-51R1
R876	0699-3944	1	RESISTOR 750 +-1% .063W TKF TC0+-200	09891	RK73H1J7500F
R877	0699-3941	1	RESISTOR 511 +-1% .063W TKF TC0+-200	00746	MCR03-F-5110
R879	0699-3924	1	RESISTOR 100 +-1% .063W TKF TC0+-200	00746	MCR03-F-1000
R880	0699-3970	1	RESISTOR 10K +-1% .063W TKF TC0+-200	09891	RK73H1J1002F
R881	0699-3950	1	RESISTOR 1.33K +-1% .063W TKF TC0+-200	09891	RK73H1J1331F
R882	0699-3947	1	RESISTOR 1K +-1% .063W TKF TC0+-200	00746	MCR03-F-1001
R883	0699-3928	1	RESISTOR 147 +-1% .063W TKF TC0+-200	00746	MCR03-F-1470
R884	0699-3931	1	RESISTOR 196 +-1% .063W TKF TC0+-200	09891	RK73H1J1960F
R885	0699-3975	1	RESISTOR 16.2K +-1% .063W TKF TC0+-200	09891	RK73H1J1622F
R886	0699-3961	1	RESISTOR 3.83K +-1% .063W TKF TC0+-200	09891	RK73H1J3831F
R887	0699-3918	1	RESISTOR 51.1 +-1% .063W TKF TC0+-200	00746	MCR03-F-51R1
R888	0699-3921	1	RESISTOR 75 +-1% .063W TKF TC0+-200	00746	MCR03-F-75R0
R900	0699-3970	1	RESISTOR 10K +-1% .063W TKF TC0+-200	09891	RK73H1J1002F
R901	0699-3968	1	RESISTOR 8.25K +-1% .063W TKF TC0+-200	09891	RK73H1J8251F
R902	0699-3972	1	RESISTOR 12.1K +-1% .063W TKF TC0+-200	09891	RK73H1J1212F
R903	0699-3999	1	RESISTOR 178K +-1% .063W TKF TC0+-200	09891	RK73H1J1783F
R904	0699-3970	1	RESISTOR 10K +-1% .063W TKF TC0+-200	09891	RK73H1J1002F

Agilent Part Number E4403-60001
Reference/Third Converter (3.0 Ghz)

Reference Designator	Agilent Part Number	Qty	Description	Mgr Code	Mfr Part Number
R905	0699-3970	1	RESISTOR 10K +-1% .063W TKF TC0+-200	09891	RK73H1J1002F
R906	0699-3978	1	RESISTOR 21.5K +-1% .063W TKF TC0+-200	09891	RK73H1J2152F
R907	0699-3939	1	RESISTOR 422 +-1% .063W TKF TC0+-200	09891	RK73H1J4220F
R908	0699-3939	1	RESISTOR 422 +-1% .063W TKF TC0+-200	09891	RK73H1J4220F
R909	0699-3939	1	RESISTOR 422 +-1% .063W TKF TC0+-200	09891	RK73H1J4220F
R910	0699-3929	1	RESISTOR 162 +-1% .063W TKF TC0+-200	09891	RK73H1J1620F
R911	0699-3924	1	RESISTOR 100 +-1% .063W TKF TC0+-200	00746	MCR03-F-1000
R912	0699-3924	1	RESISTOR 100 +-1% .063W TKF TC0+-200	00746	MCR03-F-1000
R914	0699-3931	1	RESISTOR 196 +-1% .063W TKF TC0+-200	09891	RK73H1J1960F
R915	0699-3365	1	RESISTOR 56.2 +-1% .065W TKF TC0+-200	09891	RK73H1J56R2F
R916	0699-3970	1	RESISTOR 10K +-1% .063W TKF TC0+-200	09891	RK73H1J1002F
R917	0699-3964	1	RESISTOR 5.11K +-1% .063W TKF TC0+-200	09891	RK73H1J5111F
R919	0699-3970	1	RESISTOR 10K +-1% .063W TKF TC0+-200	09891	RK73H1J1002F
R920	0699-3937	1	RESISTOR 348 +-1% .063W TKF TC0+-200	00746	MCR03-F-3480
R921	0699-3931	1	RESISTOR 196 +-1% .063W TKF TC0+-200	09891	RK73H1J1960F
R922	0699-3924	1	RESISTOR 100 +-1% .063W TKF TC0+-200	00746	MCR03-F-1000
R925	0699-3970	1	RESISTOR 10K +-1% .063W TKF TC0+-200	09891	RK73H1J1002F
R926	0699-3954	1	RESISTOR 1.96K +-1% .063W TKF TC0+-200	09891	RK73H1J1961F
R927	0699-3574	1	RESISTOR 0 .0625W TKF	09891	RM73Z1JT
R928	0699-3924	1	RESISTOR 100 +-1% .063W TKF TC0+-200	00746	MCR03-F-1000
R929	0699-3924	1	RESISTOR 100 +-1% .063W TKF TC0+-200	00746	MCR03-F-1000
T300	9100-5140	1	TRANSFORMER-SMALL SIGNAL SMT, PRI-MARY	01886	R4488-A
T301	9100-5140	1	TRANSFORMER-SMALL SIGNAL SMT, PRI-MARY	01886	R4488-A
T302	9100-4763	1	TRANSFORMER-SMALL SIGNAL	01886	J9140-A
T400	9100-5199	1	TRANSFORMER-SMALL SIGNAL INDUC-TANCE TYP	01886	T6376-A
T402	9100-5199	1	TRANSFORMER-SMALL SIGNAL INDUC-TANCE TYP	01886	T6376-A
T403	9100-5199	1	TRANSFORMER-SMALL SIGNAL INDUC-TANCE TYP	01886	T6376-A

 **Indicates factory-selected value*

Agilent Part Number E4403-60001
Reference/Third Converter (3.0 Ghz)

Reference Designator	Agilent Part Number	Qty	Description	Mgr Code	Mfr Part Number
T404	9100-5199	1	TRANSFORMER-SMALL SIGNAL INDUC-TANCE TYP	01886	T6376-A
T405	9100-5362	1	TRANSFORMER-BALUNMAGNETICCOUPLER	06353	458PT-1024(B5F)
T406	9100-5362	1	TRANSFORMER-BALUNMAGNETICCOUPLER	06353	458PT-1024(B5F)
T407	9100-5362	1	TRANSFORMER-BALUNMAGNETICCOUPLER	06353	458PT-1024(B5F)
U1	1826-1862	1	IC OP AMP LOW-BIAS-H-IMPD DUAL 8 PIN	04078	TL072CD
U100	1826-1862	1	IC OP AMP LOW-BIAS-H-IMPD DUAL 8 PIN	04078	TL072CD
U101	1826-1925	1	IC OP AMP LOW-NOISE SINGLE 8 PIN	03285	OP-27GS
U103	1826-1925	1	IC OP AMP LOW-NOISE SINGLE 8 PIN	03285	OP-27GS
U104	1826-0122	1	IC PWR MGT-V-REG-FXD-POS 4.8/5.2V TO-220	03406	LM340T-5
U105	1820-5937	1	IC FF CMOS/AC D-TYPE POS-EDGE-TRIG	02237	74AC74SC.
U106	1820-5937	1	IC FF CMOS/AC D-TYPE POS-EDGE-TRIG	02237	74AC74SC.
U107	1821-2085	1	IC PRESCR ECL SELECTABLE 8-SOIC	28480	1821-2085
U108	1820-5945	1	IC GATE CMOS/AC NAND QUAD 2-INP	36633	MC74AC00D
U109	1820-5936	1	IC GATE CMOS/AC OR QUAD 2-INP	36633	MC74AC32DR2
U110	1826-1838	1	IC PWR MGT-V-REF-FXD 4.95/5.05V 8 PINS	10858	LT1021DCS8-5
U200	1826-2175	1	IC RF/IF AMPL SINGLE 4 PIN U-WAVE-PILL	01542	MSA-0386-TR1
U201	1826-1862	1	IC OP AMP LOW-BIAS-H-IMPD DUAL 8 PIN	04078	TL072CD
U202	1826-1862	1	IC OP AMP LOW-BIAS-H-IMPD DUAL 8 PIN	04078	TL072CD
U203	1826-2204	1	IC RF/IF AMPL SINGLE 4 PIN U-WAVE-PILL	01542	MSA-0686
U204	1826-1458	1	D/A 8-DGT 16-P-SOIC	02910	DAC-08ED
U205	1820-5629	1	IC FF ECL/10KH D-M/S POS-EDGE-TRIG	36633	MC10H131FN
U300	1826-2175	1	IC RF/IF AMPL SINGLE 4 PIN U-WAVE-PILL	01542	MSA-0386-TR1
U301	1826-2175	1	IC RF/IF AMPL SINGLE 4 PIN U-WAVE-PILL	01542	MSA-0386-TR1
U302	1826-0393	1	IC PWR MGT-V-REG-ADJ-POS 1.2/37V 3 PINS	03406	LM317T
U303	1826-2175	1	IC RF/IF AMPL SINGLE 4 PIN U-WAVE-PILL	01542	MSA-0386-TR1
U304	1826-2175	1	IC RF/IF AMPL SINGLE 4 PIN U-WAVE-PILL	01542	MSA-0386-TR1
U400	1826-2722	1	D/A 12-BIT 16-P-SOIC CMOS	03285	AD7243AR
U402	E4403-50001	1		28480	E4403-50001

**Indicates factory-selected value*

Agilent Part Number E4403-60001
Reference/Third Converter (3.0 Ghz)

Reference Designator	Agilent Part Number	Qty	Description	Mgr Code	Mfr Part Number
U502	1820-5950	1	IC INV CMOS/AC HEX 14-SOIC	01698	SN74AC04AD
U503	1820-5951	1	IC GATE CMOS/AC AND QUAD 2-INP	36633	MC74AC08DR2
U504	1826-1622	1	IC OP AMP LOW-BIAS-H-IMPD QUAD 14 PIN	01698	TL074CD
U550	1826-1810	1	IC OP AMP LOW-BIAS-H-IMPD SINGLE 8 PIN	01698	TL071CD
U551	1826-2261	1	IC TEMP XDCR PRCN SINGLE 8 PIN	03406	LM35DM
U552	1826-2147	1	ANALOG MULTIPLEXER 8 CHNL 16 -P-SOIC	05524	DG408DY
U553	1820-6277	1	IC SHF-RGTR CMOS/HC SYNC/ASYNC SERIAL-IN	02237	MM74HC595M
U602	1826-2981	1	IC OP AMP PRCN DUAL 8 PIN PLSTC-SOIC	10858	LT1124CS8
U603	1826-1687	1	IC PWR MGT-V-REF-FXD 9.95/10.05V 8 PINS	10858	LT1021DCS8-10
U700	1820-6277	1	IC SHF-RGTR CMOS/HC SYNC/ASYNC SERIAL-IN	02237	MM74HC595M
U701	E4401-80011	1	PAL	28480	E4401-80011
U702	1820-5940	1	IC GATE CMOS/ACT AND QUAD 2-INP	02237	74ACT08SCX.
U703	1820-6277	1	IC SHF-RGTR CMOS/HC SYNC/ASYNC SERIAL-IN	02237	MM74HC595M
U704	1820-5941	1	IC DCDR-DEMUXR CMOS/ACT BIN 8-TO-1-LINE	02237	74ACT138SCX.
U705	E4403-80013	1		28480	E4403-80013
U706	1820-5939	1	IC INV CMOS/ACT HEX	02237	74ACT04SCX.
U707	1820-5804	1	IC SHF-RGTR CMOS/HC SYNC/ASYNC	01698	SN74HC165D
U708	1820-8830	1	IC MUXR/DATA-SEL CMOS/ACT 8-TO-1-LINE	02237	74ACT251SCX
U709	1820-6277	1	IC SHF-RGTR CMOS/HC SYNC/ASYNC SERIAL-IN	02237	MM74HC595M
U710	1820-6277	1	IC SHF-RGTR CMOS/HC SYNC/ASYNC SERIAL-IN	02237	MM74HC595M
U711	1820-6277	1	IC SHF-RGTR CMOS/HC SYNC/ASYNC SERIAL-IN	02237	MM74HC595M
U800	1820-5950	1	IC INV CMOS/AC HEX 14-SOIC	01698	SN74AC04AD
U801	1826-3000	1	IC AUDIO AMPL LOW-NOISE DUAL 8 PIN	03285	OP275GS
U802	1826-3000	1	IC AUDIO AMPL LOW-NOISE DUAL 8 PIN	03285	OP275GS

 **Indicates factory-selected value*

Agilent Part Number E4403-60001
Reference/Third Converter (3.0 Ghz)

Reference Designator	Agilent Part Number	Qty	Description	Mgr Code	Mfr Part Number
U804	1826-2513	1	D/A 8-BIT 20-P-SOIC CMOS	03285	DAC-8229FS
U805	1820-5753	1	IC MUXR/DATA-SEL 4-TO-1-LINE 16-SOIC	02910	74HC253D
U901	1826-1872	1	IC PWR MGT-V-REG-ADJ-POS 4.975/5.025V 8	03406	LP2951ACM
U902	1826-1862	1	IC OP AMP LOW-BIAS-H-IMPD DUAL 8 PIN	04078	TL072CD
U903	1826-2175	1	IC RF/IF AMPL SINGLE 4 PIN U-WAVE-PILL	01542	MSA-0386-TR1
U904	1826-2175	1	IC RF/IF AMPL SINGLE 4 PIN U-WAVE-PILL	01542	MSA-0386-TR1
U905	1826-1810	1	IC OP AMP LOW-BIAS-H-IMPD SINGLE 8 PIN	01698	TL071CD
U906	1826-2204	1	IC RF/IF AMPL SINGLE 4 PIN U-WAVE-PILL	01542	MSA-0686
Y1	0410-4065	1	PRECISION BULK MODE-AT	01409	0410-4065
Y2	0410-0405	1	PRECISION BULK MODE-AT CRYSTAL QUARTZ	04458	BK3-1B-10MHZ

5300 D-E4403-60001-2

SYM	REVISIONS	APPROVED	DATE
A	AS ISSUED /BP		

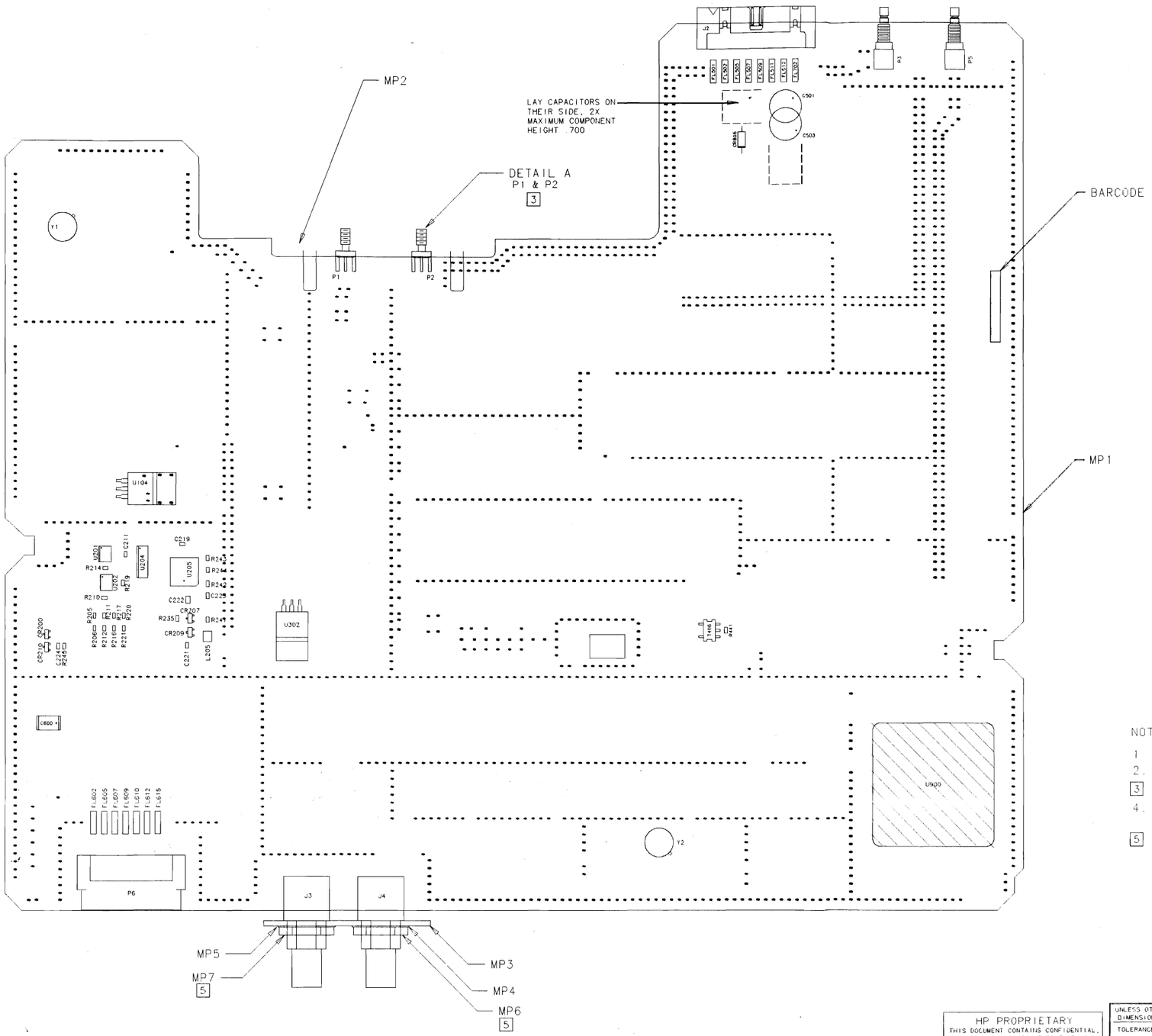

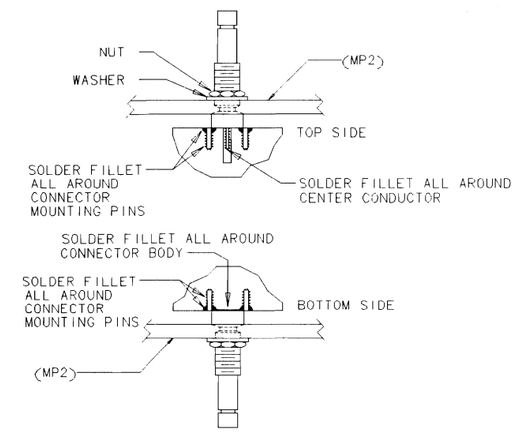

DETAIL A
SCALE NONE

NOTES: UNLESS OTHERWISE SPECIFIED

1. USE RAW BOARD E4403-20001
2. DO NOT LOAD CROSSHATCHED COMPONENTS
3. TORQUE P1 AND P2 TO 2 IN-LBS
4. PART NUMBERS 9135-0461 AND 9135-5352 MUST NOT BE EXPOSED TO HALIDE-CONTAINING ACID FLUXES.
5. TORQUE J3 AND J4 TO 20 IN-LBS

TOP SIDE

SEE MATERIAL LIST E4403-60001

HP PROPRIETARY
THIS DOCUMENT CONTAINS CONFIDENTIAL, PROPRIETARY INFORMATION THAT IS HEWLETT-PACKARD (HP) PROPERTY. DO NOT DISCLOSE TO OR DUPLICATE FOR OTHERS EXCEPT AS AUTHORIZED BY HP.

UNLESS OTHERWISE SPECIFIED, DIMENSIONS ARE IN INCHES
TOLERANCES: XX.XXX .010 XX XX .02
THIRD ANGLE PROJECTION
DO NOT SCALE THIS DRAWING

DRAWN BY | DATE
ENGINEER/CHECKER | DATE
RELEASE TO PROD. | DATE
SUPERSEDES DWG.

TITLE: ASSEMBLY, PWA MOSQUITO 2 FETOP

MENTOR FILENAME
SCALE NONE
SHEET 1 OF 2
PART NUMBER E4403-60001
D-E4403-60001-2

HEWLETT PACKARD

5300 D-E4403-60001-2

SYM	REVISIONS	APPROVED	DATE
A	AS ISSUED /BP		

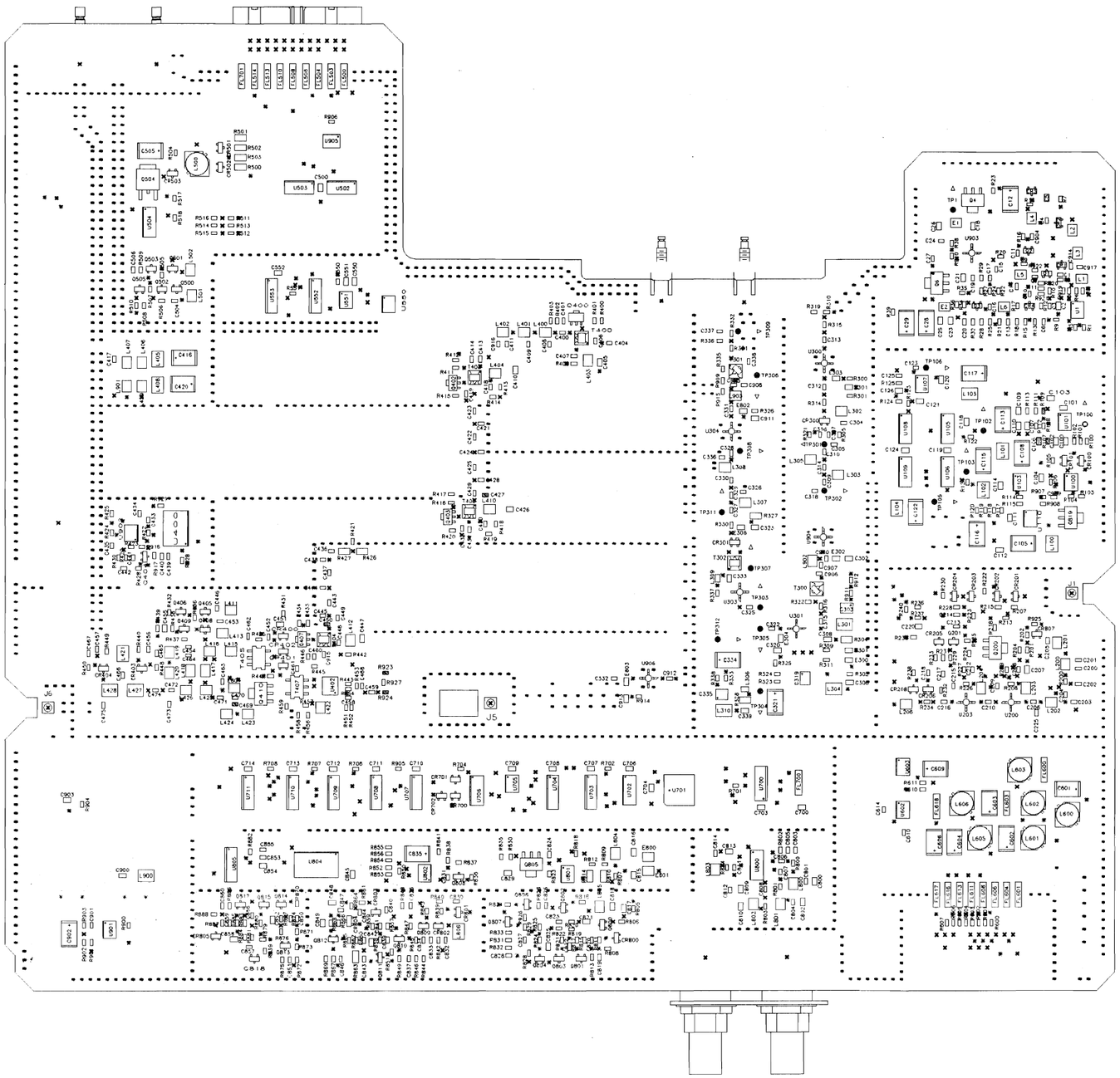

BOTTOM SIDE

HP PROPRIETARY
THIS DOCUMENT CONTAINS CONFIDENTIAL, PROPRIETARY INFORMATION THAT IS HEWLETT-PACKARD (HP) PROPERTY. DO NOT DISCLOSE TO OR DUPLICATE FOR OTHERS EXCEPT AS AUTHORIZED BY HP.

UNLESS OTHERWISE SPECIFIED, DIMENSIONS ARE IN INCHES
TOLERANCES: XX.XXX .010 XX.XX .02
THIRD ANGLE PROJECTION
DO NOT SCALE THIS DRAWING

DRAWN BY	DATE
ENGINEER/CHECKER	DATE
RELEASE TO PROD.	DATE
SUPERSEDES DWG	

TITLE: ASSEMBLY, PWA MOSQUITO 2 FETOP

MENTOR FILENAME
SCALE NONE
SHEET 2 OF 2
PART NUMBER E4403-60001
D-E4403-60001-2

HEWLETT PACKARD

D-E4403-60001-1

REV	INFORMATION		APPROVED	DATE
A	AS ISSUED	/TM		
B	PER PCO 53-13161	/CO		
C	PER PCO 53-13856	/RS		

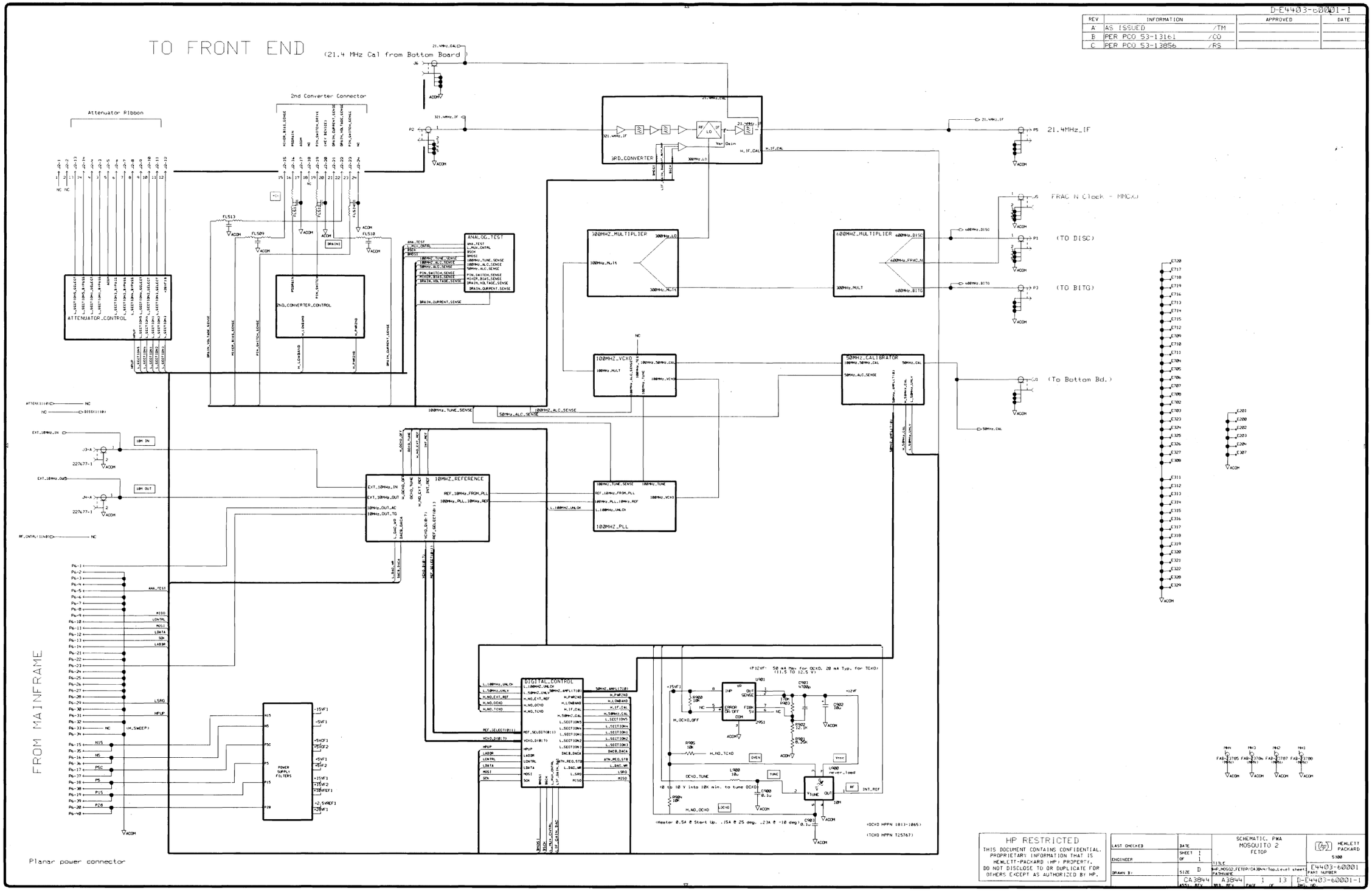

HP RESTRICTED
THIS DOCUMENT CONTAINS CONFIDENTIAL, PROPRIETARY INFORMATION THAT IS HEWLETT-PACKARD (HP) PROPERTY. DO NOT DISCLOSE TO OR DUPLICATE FOR OTHERS EXCEPT AS AUTHORIZED BY HP.

LAST CHECKED	DATE	SCHEMATIC, PWA MOSQUITO 2 FETOP	HEWLETT PACKARD 5100
ENGINEER	SHEET 1 OF 1	TITLE HP_MOSQ2_FETOP/CA3844/Top_Level sheet	E4403-60001 PART NUMBER
DRAWN BY	SIZE D	PATHNAME	
	CA3844 ASSY. REV	A3844 SCH. REV 1 PAGE 13 OF	D-E4403-60001-1 DWG. NO.

REVISIONS
SEE PAGE 1 FOR REVISION HISTORY

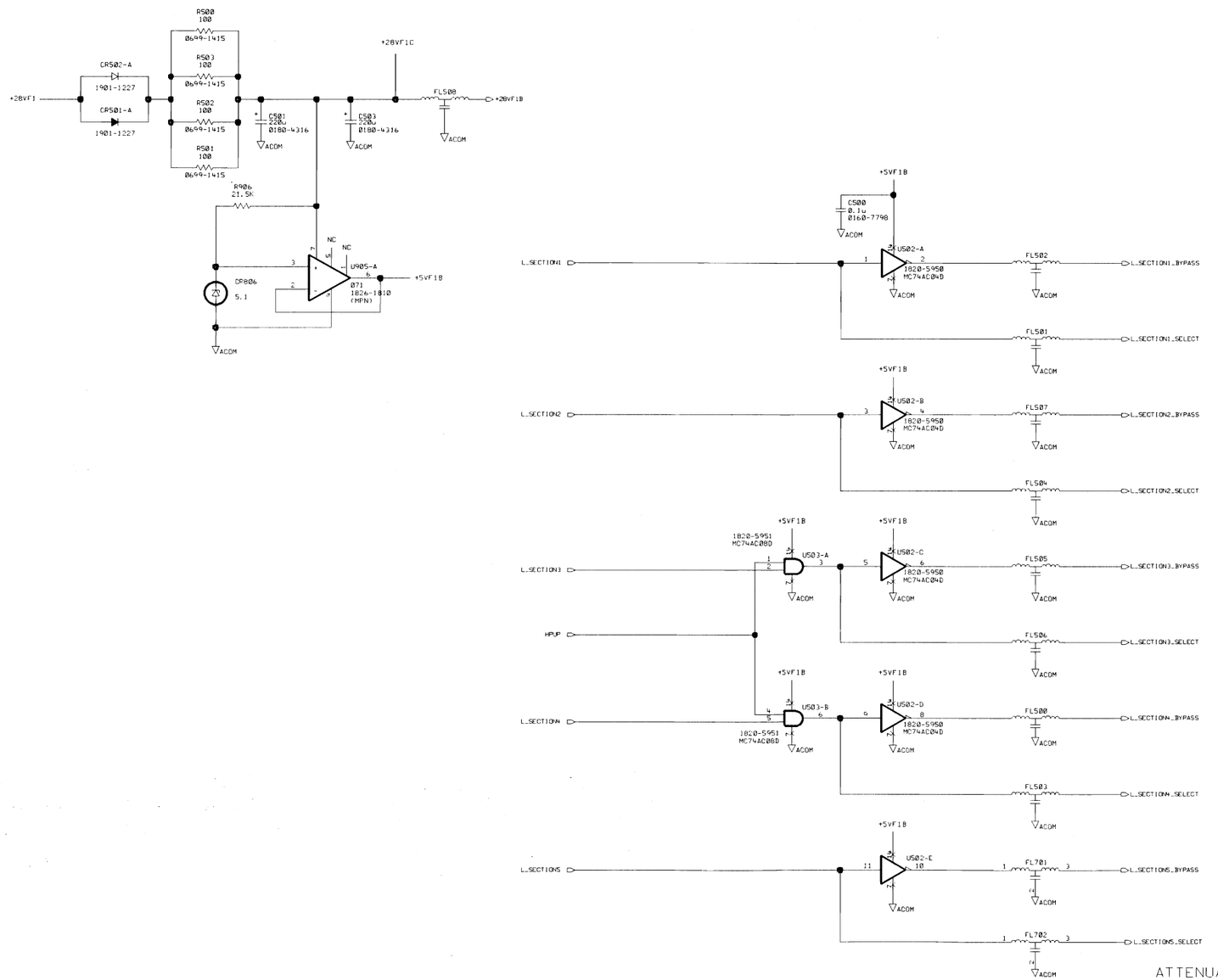

ATTENUATOR CONTROL

HP RESTRICTED

THIS DOCUMENT CONTAINS CONFIDENTIAL, PROPRIETARY INFORMATION THAT IS HEWLETT-PACKARD (HP) PROPERTY. DO NOT DISCLOSE TO OR DUPLICATE FOR OTHERS EXCEPT AS AUTHORIZED BY HP.

LAST CHECKED	DATE	SCHEMATIC, PWA MOSQUITO 2 FETOP	HEWLETT PACKARD 5300
ENGINEER	SHEET 0 OF 0	TITLE	
DRAWN BY	SIZE C	PATHNAME $HP_MOSQ2_FETOP/CA3844/Attenuator_Control sheet1	E4403-60001 PART NUMBER
	CA3844 ASSY. REV	A3844 BRD. REV / PAGE 2 OF 13	C-E4403-60001-1 DWG. NO.

REVISIONS
SEE PAGE 1 FOR REVISION HISTORY

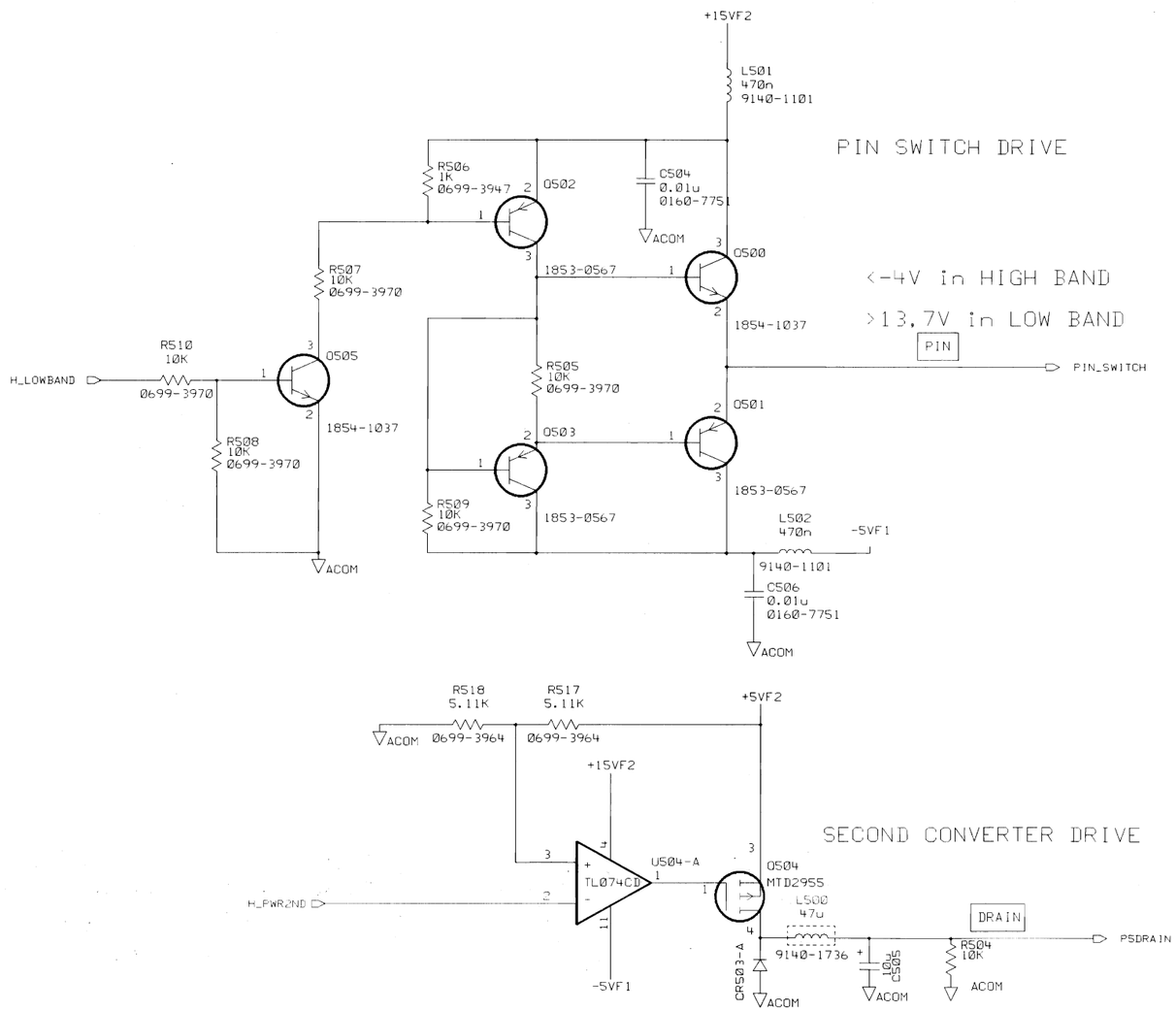

2nd CONVERTER CONTROL

HP RESTRICTED

THIS DOCUMENT CONTAINS CONFIDENTIAL. PROPRIETARY INFORMATION THAT IS HEWLETT-PACKARD (HP) PROPERTY. DO NOT DISCLOSE TO OR DUPLICATE FOR OTHERS EXCEPT AS AUTHORIZED BY HP.

LAST CHECKED	DATE	SCHEMATIC, PWA MOSQUITO 2 FETOP	HEWLETT PACKARD 5300
ENGINEER	SHEET 0 OF 0	TITLE	
DRAWN BY	SIZE B	PATHNAME $HP_MOSQ2_FETOP/CA3844/ 2nd_Converter_Control sheet1	E4403-60001 PART NUMBER
	CA3844 ASSY. REV	A3844 BRD. REV / PAGE 3 OF 13	B-E4403-60001-1 DWG. NO.

REVISIONS

SEE PAGE 1 FOR REVISION HISTORY

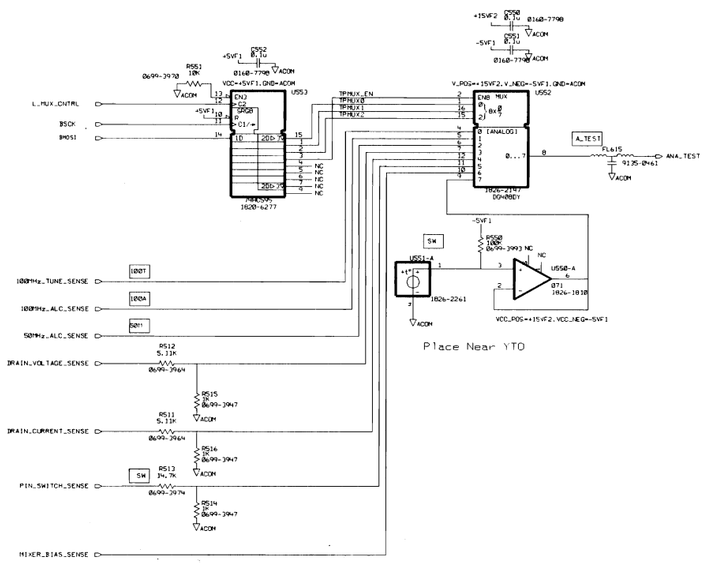

ANALOG TEST

HP RESTRICTED
THIS DOCUMENT CONTAINS CONFIDENTIAL, PROPRIETARY INFORMATION THAT IS HEWLETT-PACKARD (HP) PROPERTY. DO NOT DISCLOSE TO OR DUPLICATE FOR OTHERS EXCEPT AS AUTHORIZED BY HP.

LAST CHECKED	DATE	SCHEMATIC, PWA MOSQUITO 2 FETOP	HEWLETT PACKARD 5100
ENGINEER	SHEET 0 OF 0	TITLE	
DRAWN BY	SIZE D	HP_MOSQ2_FETOP/CA3844/Analog_Test sheet1 PATHNAME	E4403-60001 PART NUMBER
	CA3844 ASSY. REV.	A3844 MB. REV.	4 PAGE 13 OF D-E4403-60001-1 DWG. NO.

REVISIONS
SEE PAGE 1 FOR REVISION HISTORY

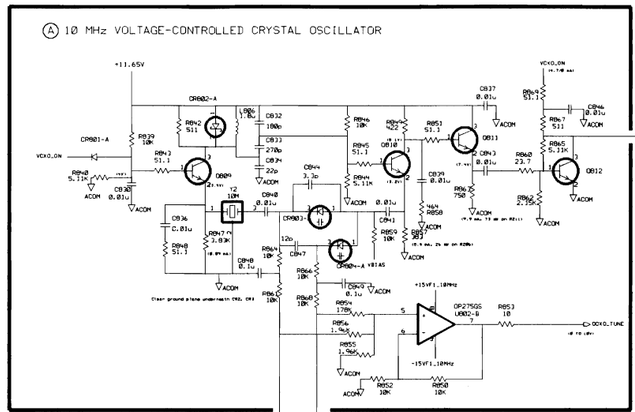

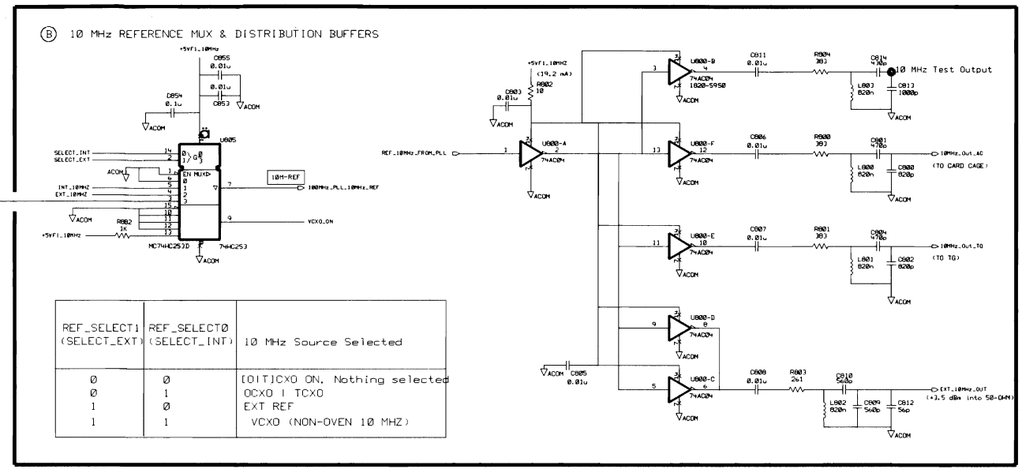

REF_SELECT1 (SELECT_EXT)	REF_SELECT0 (SELECT_INT)	10 MHz Source Selected
0	0	[OIT]CXO ON, Nothing selected
0	1	OCXO I TCXO
1	0	EXT REF
1	1	VCXO (NON-OVEN 10 MHZ)

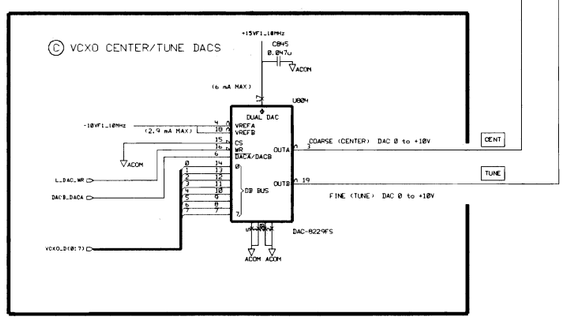

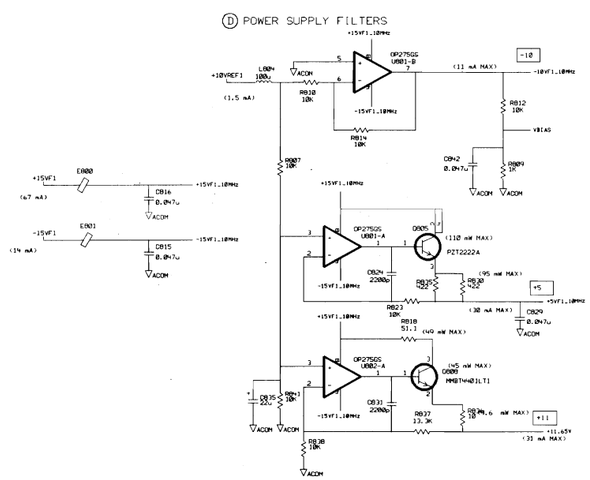

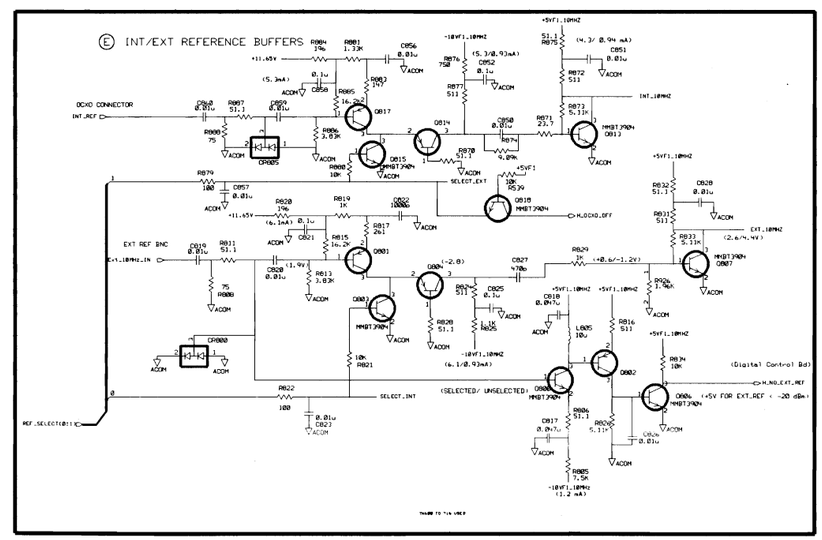

10MHz REFERENCE

HP RESTRICTED
THIS DOCUMENT CONTAINS CONFIDENTIAL, PROPRIETARY INFORMATION THAT IS HEWLETT-PACKARD (HP) PROPERTY. DO NOT DISCLOSE TO OR DUPLICATE FOR OTHERS EXCEPT AS AUTHORIZED BY HP.

LAST CHECKED	DATE	SCHEMATIC, PWA MOSQUITO 2 FETOP	HEWLETT PACKARD 5100
ENGINEER	SHEET 5 OF 13	TITLE	E4403-60001 PART NUMBER
DRAWN BY	SIZE D	HP_MOSQ2_FETOP/CA3844/10MHz_Reference sheet	
	CA3844 ASSY. REV	A3844 BDS. REV	5 OF 13 PAGE	D-E4403-60001-1 DWG. NO.

REVISIONS
SEE PAGE 1 FOR REVISION HISTORY

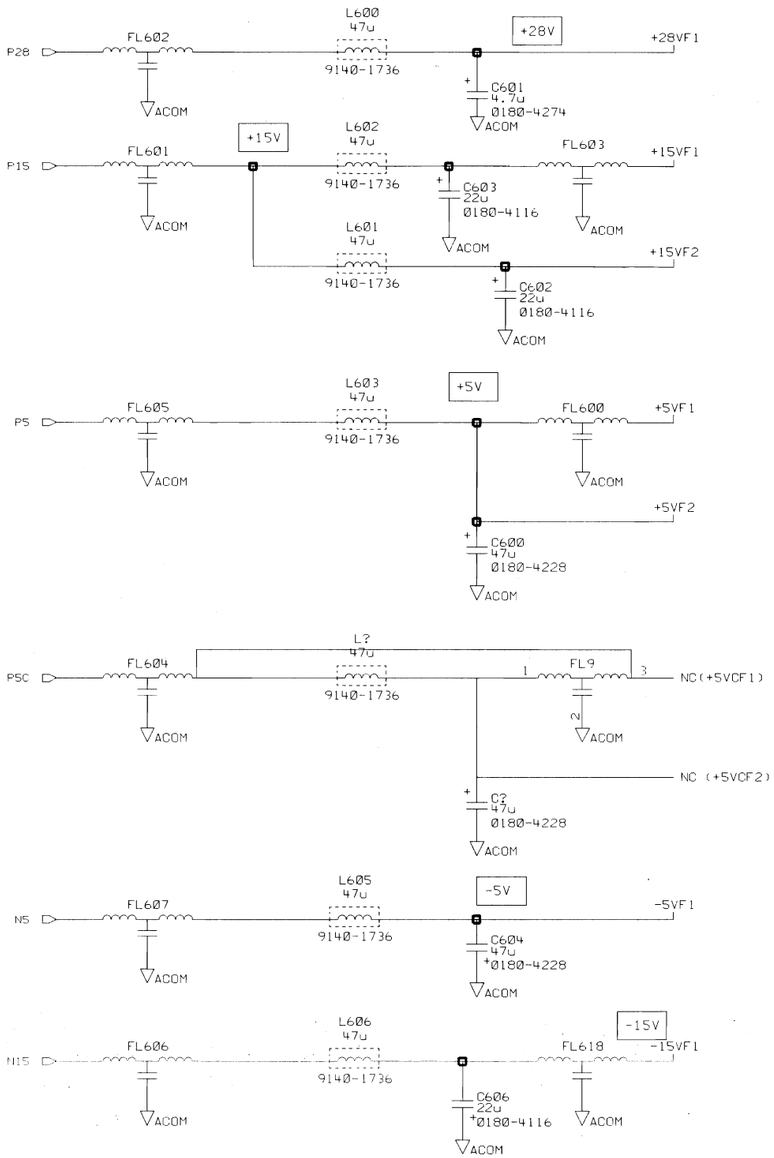

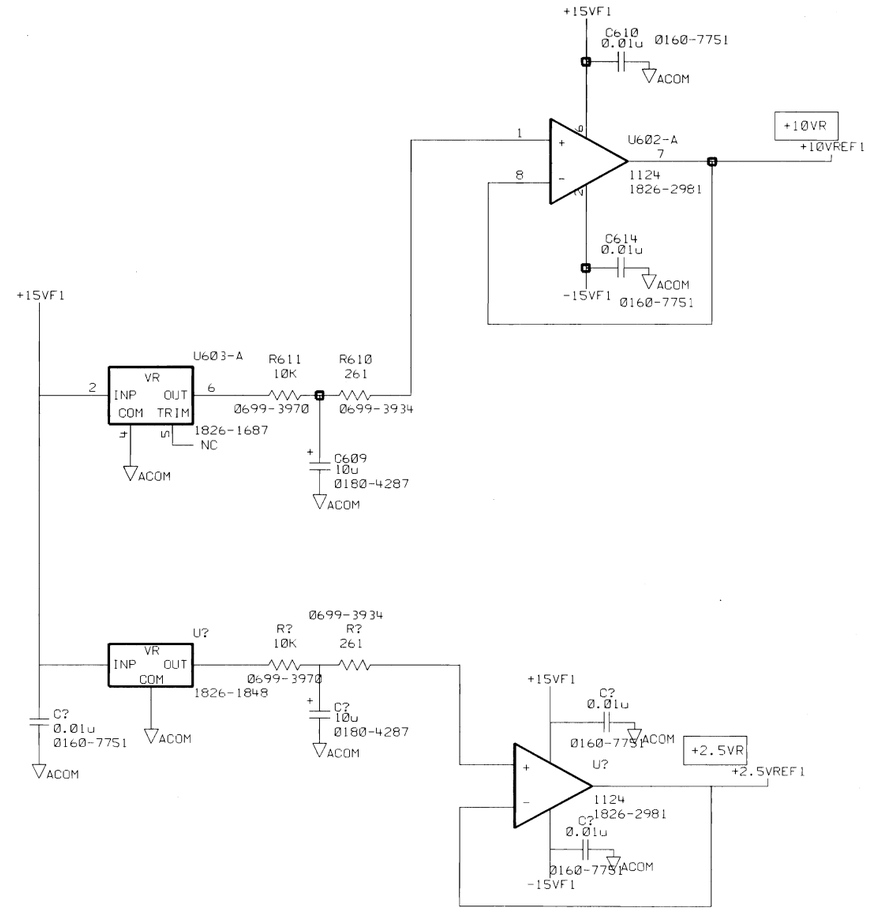

POWER SUPPLY FILTERS

HP RESTRICTED

THIS DOCUMENT CONTAINS CONFIDENTIAL. PROPRIETARY INFORMATION THAT IS HEWLETT-PACKARD (HP) PROPERTY. DO NOT DISCLOSE TO OR DUPLICATE FOR OTHERS EXCEPT AS AUTHORIZED BY HP.

LAST CHECKED	DATE	SCHEMATIC. PWA MOSQUITO 2 FETOP	HEWLETT PACKARD 5300
ENGINEER	SHEET 6 OF 13	TITLE	
DRAWN BY	SIZE B	$HP_MOSQ2_FETOP/CA3844/Power_Supply sheet1 PATHNAME	E4403-60001 PART NUMBER
	CA3844 ASSY. REV	A3844 BRD. REV / PAGE 6 OF 13	B-E4403-60001-1 DWG. NO.

REVISIONS
SEE PAGE 1 FOR REVISION HISTORY

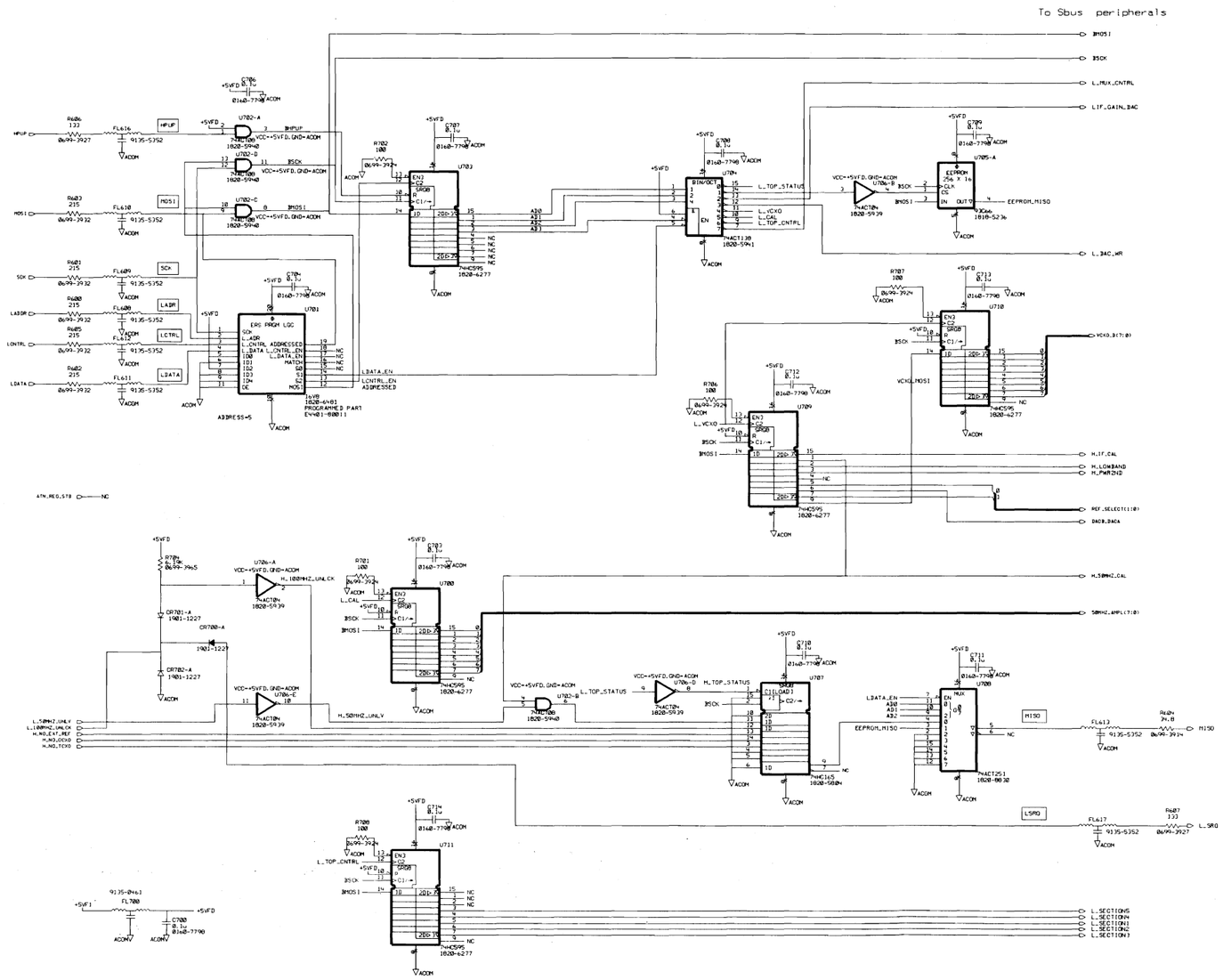

DIGITAL CONTROL

HP RESTRICTED
THIS DOCUMENT CONTAINS CONFIDENTIAL, PROPRIETARY INFORMATION THAT IS HEWLETT-PACKARD (HP) PROPERTY. DO NOT DISCLOSE TO OR DUPLICATE FOR OTHERS EXCEPT AS AUTHORIZED BY HP.

LAST CHECKED	DATE	SCHEMATIC, PWA MOSQUITO 2 FETOP	HEWLETT PACKARD S100
ENGINEER	SHEET 7 OF 13	TITLE #4F,MOSQ2,FETOP/CA3844/Digital Control sheet1	E4403-60001 PART NUMBER
DRAWN BY	SIZE D	PATHNAME	
	CA3844 ASSY. REV	A3844 WB REV 7 CAGE 13 OF	D-E4403-60001-1 DWG. NO.

REVISIONS
SEE PAGE 1 FOR REVISION HISTORY

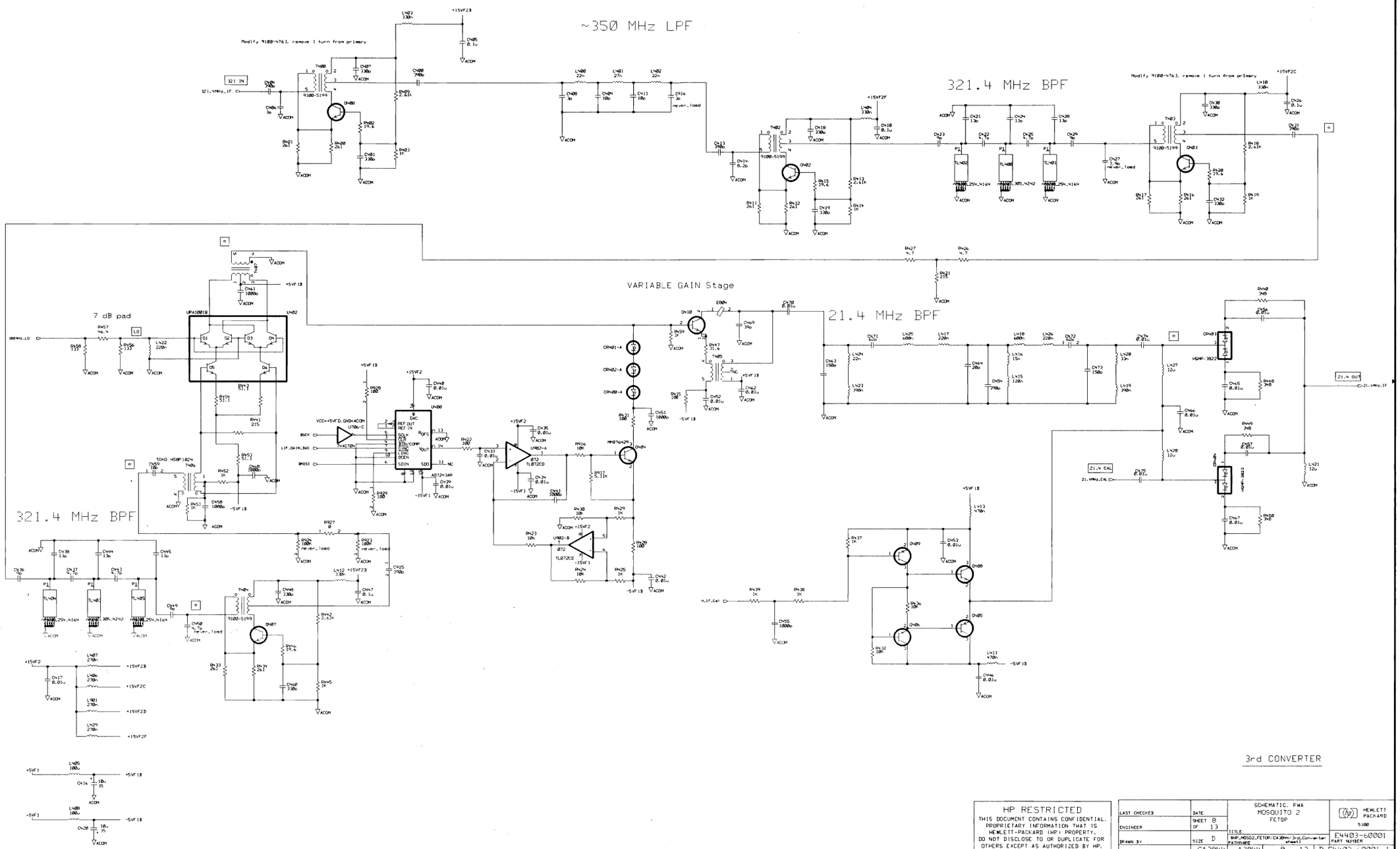

HP RESTRICTED
THIS DOCUMENT CONTAINS CONFIDENTIAL, PROPRIETARY INFORMATION THAT IS HEWLETT-PACKARD (HP) PROPERTY. DO NOT DISCLOSE TO OR DUPLICATE FOR OTHERS EXCEPT AS AUTHORIZED BY HP.

LAST CHECKED	DATE	SCHEMATIC, PWA MOSQUITO 2 FETOP	HEWLETT PACKARD 5100
ENGINEER	SHEET 8 OF 13	TITLE	
DRAWN BY	SIZE D	PATHNAME: BHP_MOSQ2_FETOP/CA3844/3rd_Converter sheet1	E4403-60001 PART NUMBER
	CA3844 ASSY. REV	A3844 BRD. REV	8 PAGE OF 13	D-E4403-60001-1 DWG. NO.

REVISIONS
SEE PAGE 1 FOR REVISION HISTORY

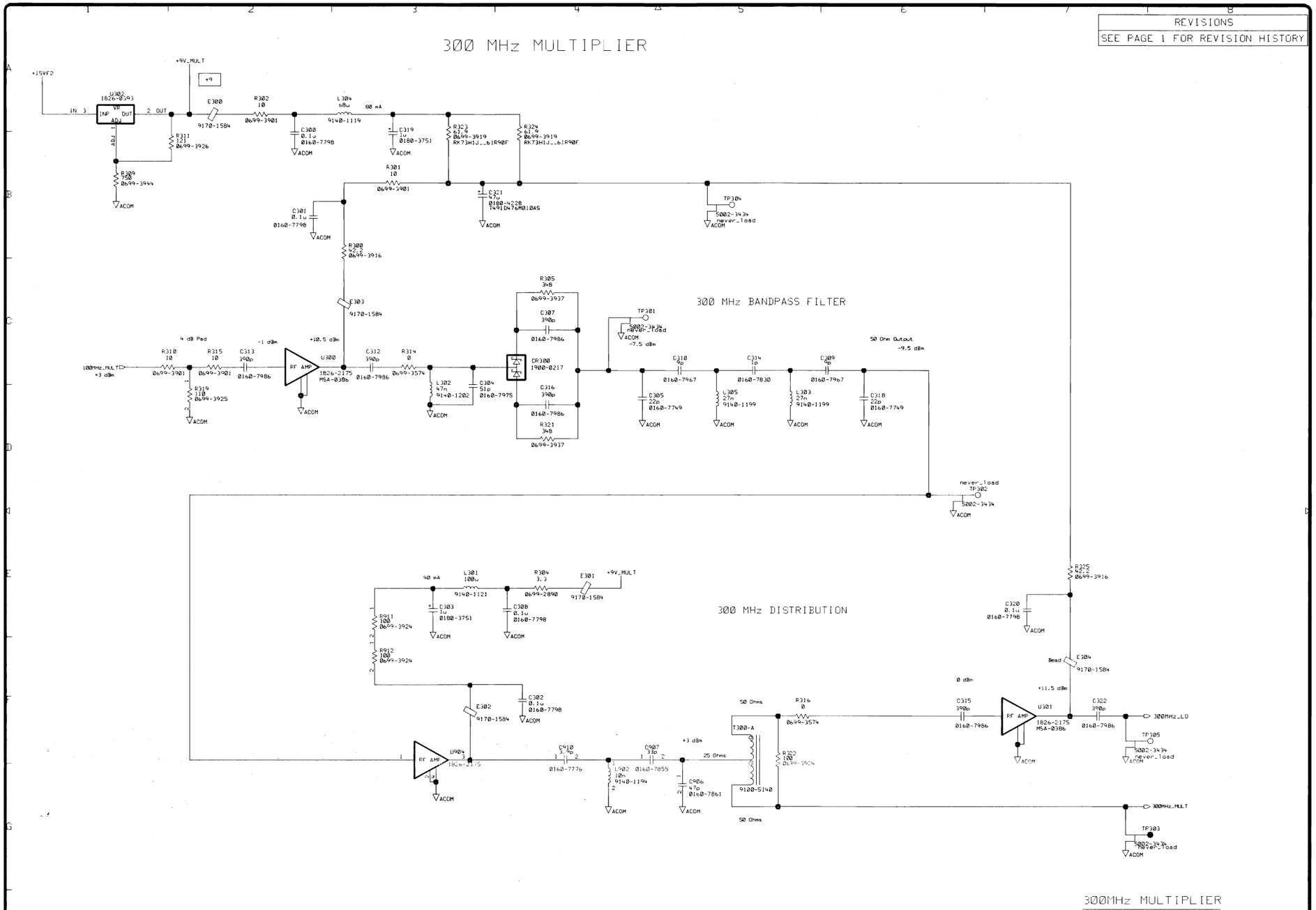

HP RESTRICTED

THIS DOCUMENT CONTAINS CONFIDENTIAL, PROPRIETARY INFORMATION THAT IS HEWLETT-PACKARD (HP) PROPERTY. DO NOT DISCLOSE TO OR DUPLICATE FOR OTHERS EXCEPT AS AUTHORIZED BY HP.

LAST CHECKED	DATE	SCHEMATIC, PWA MOSQUITO 2 FETOP	HEWLETT PACKARD 5300
ENGINEER	SHEET 9 OF 13	TITLE	E4403-60001 PART NUMBER
DRAWN BY	SIZE C	PATHNAME SHP_MOS02_FETOP/CA3844/ 300MHz_Multiplier sheet1	
	CA3844 ASSY. REV.	A3844 BRD. REV. / PAGE 9 OF 13	C-E4403-60001-1 DWG. NO.

REVISIONS
SEE PAGE 1 FOR REVISION HISTORY

100 MHz VCXO

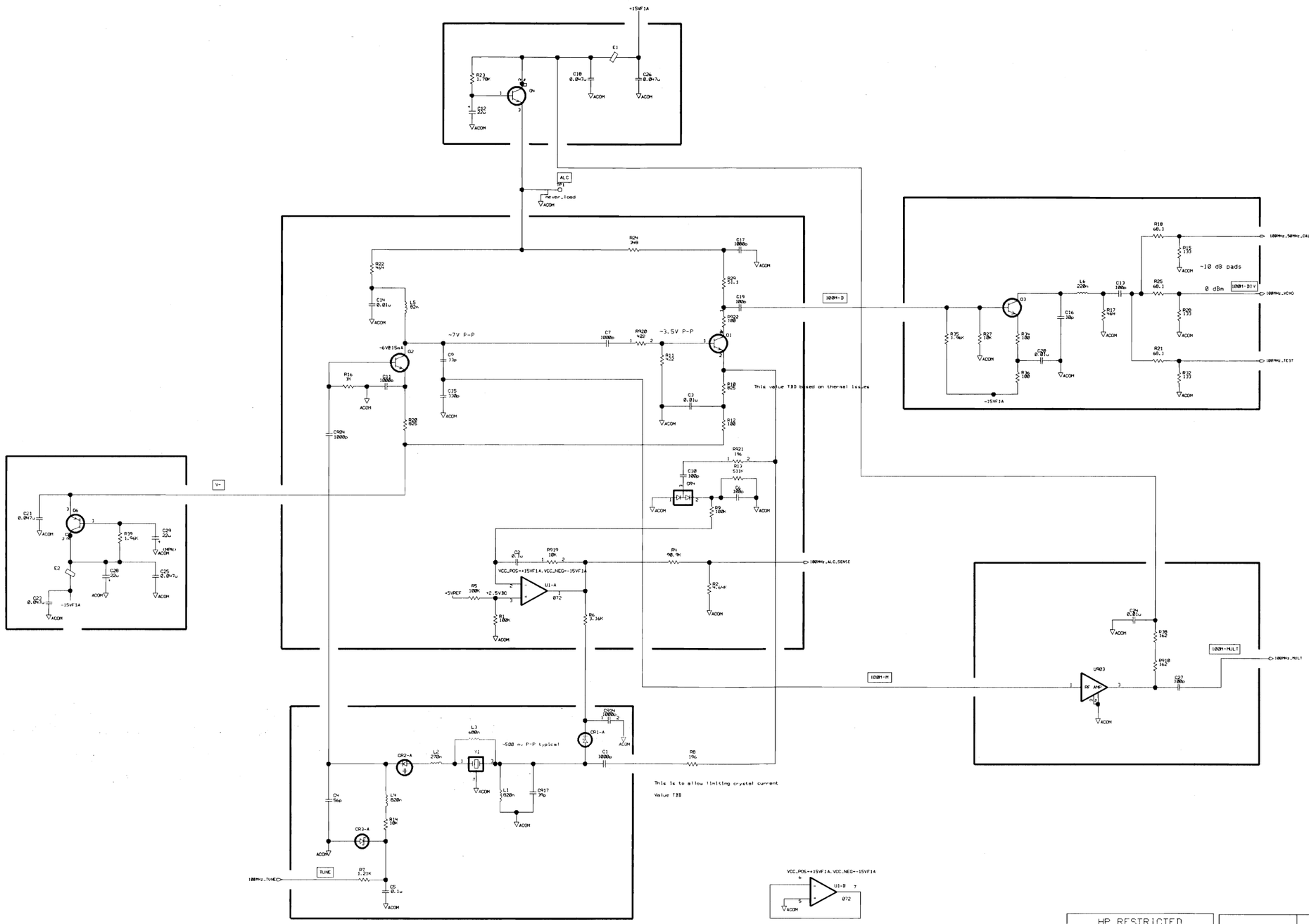

100MHz VCXO

HP RESTRICTED
THIS DOCUMENT CONTAINS CONFIDENTIAL, PROPRIETARY INFORMATION THAT IS HEWLETT-PACKARD (HP) PROPERTY. DO NOT DISCLOSE TO OR DUPLICATE FOR OTHERS EXCEPT AS AUTHORIZED BY HP.

LAST CHECKED	DATE	SCHEMATIC, PWA MOSQUITO 2 FETOP	HEWLETT PACKARD 5300
ENGINEER	SHEET 10 OF 13	TITLE	
DRAWN BY	SIZE D	PATHNAME #HP_MOSQ2_FETOP/CA3844/100MHz_VCXO sheet1	PART NUMBER E4403-60001
	CA3844 ASSY. REV	A3844 MBD. REV	PAGE 10 OF 13	DWG. NO. D-E4403-60001-1

100 MHz PLL

REVISIONS
SEE PAGE 1 FOR REVISION HISTORY

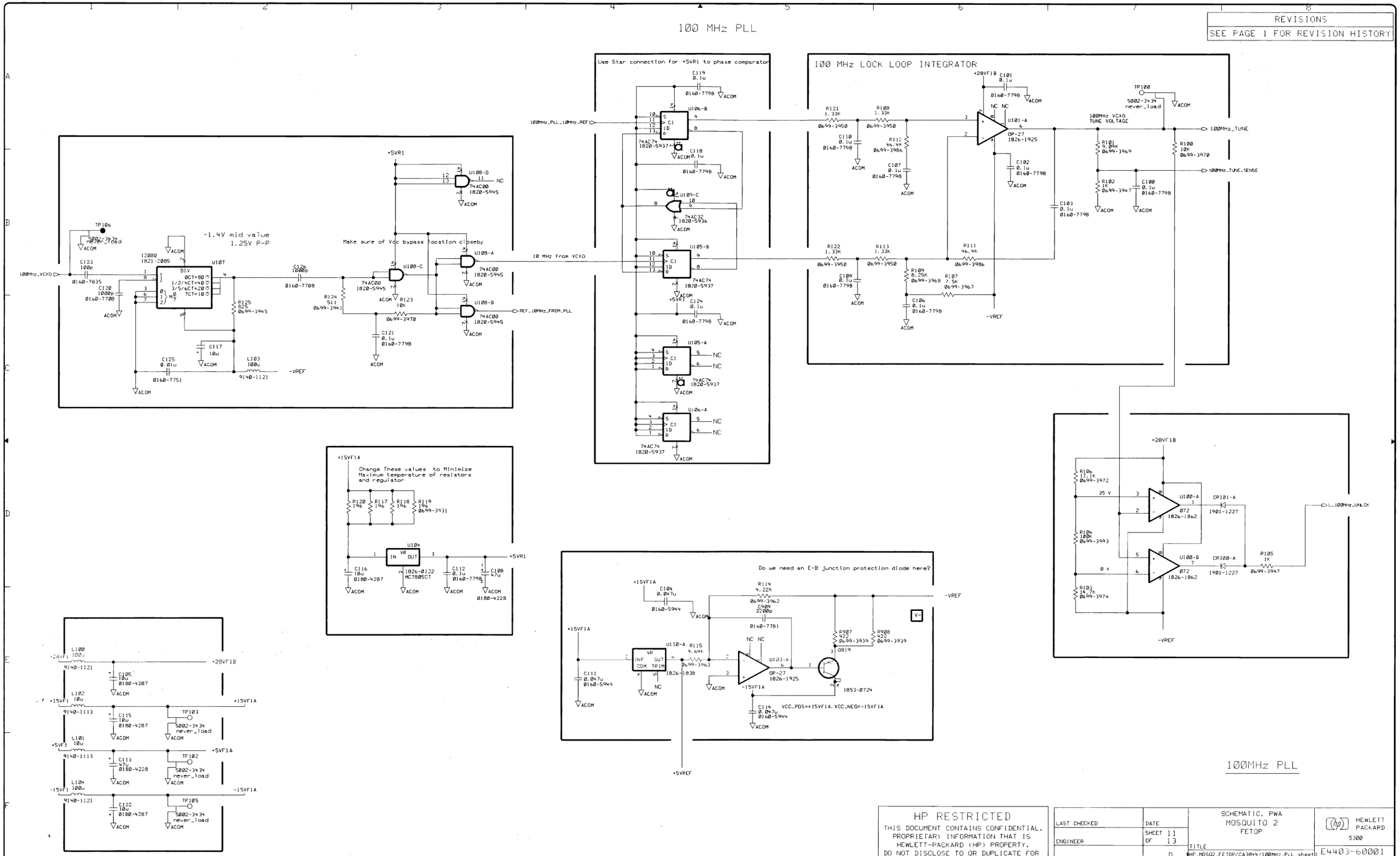

HP RESTRICTED
THIS DOCUMENT CONTAINS CONFIDENTIAL, PROPRIETARY INFORMATION THAT IS HEWLETT-PACKARD (HP) PROPERTY. DO NOT DISCLOSE TO OR DUPLICATE FOR OTHERS EXCEPT AS AUTHORIZED BY HP.

LAST CHECKED	DATE	SCHEMATIC, PWA MOSQUITO 2 FETOP	HEWLETT PACKARD S300
ENGINEER	SHEET 11 OF 13	TITLE	
DRAWN BY	SIZE D	PATHNAME HP_MOSQ2_FETOP/CA3844/100MHz_PLL sheet	PART NUMBER E4403-60001
	CA3844 ASSY. REV	A3844 BRD. REV / PAGE 11 OF 13	DWG. NO. C-E4403-60001-1

REVISIONS
SEE PAGE 1 FOR REVISION HISTORY

600 MHz_Multiplier

DOUBLER AND 600 MHZ DISTRIBUTION

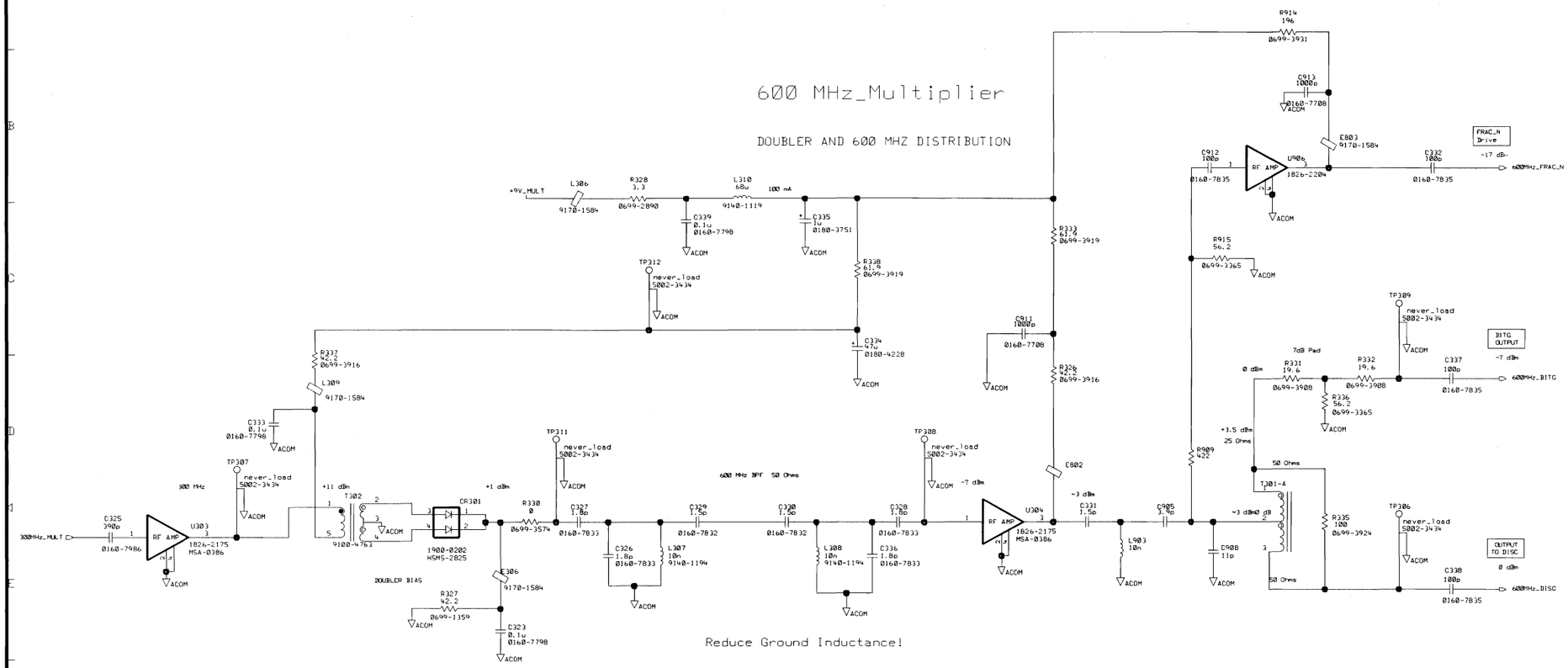

Reduce Ground Inductance!

600MHz MULTIPLIER

HP RESTRICTED
THIS DOCUMENT CONTAINS CONFIDENTIAL. PROPRIETARY INFORMATION THAT IS HEWLETT-PACKARD (HP) PROPERTY. DO NOT DISCLOSE TO OR DUPLICATE FOR OTHERS EXCEPT AS AUTHORIZED BY HP.

LAST CHECKED	DATE	SCHEMATIC, PWA MOSQUITO 2 FETOP	HEWLETT PACKARD 5300
ENGINEER	SHEET 12 OF 13	TITLE $HP_MOSQ2_FETOP/CA3844/ 600MHz_Multiplier sheet1	E4403-60001 PART NUMBER
DRAWN BY	SIZE C	PATHNAME	
	CA3844 ASSY. REV	A3844 BRD. REV	12 OF 13 PAGE
			C-E4403-60001-1 DWG. NO.

REVISIONS
SEE PAGE 1 FOR REVISION HISTORY

50 MHz Calibrator

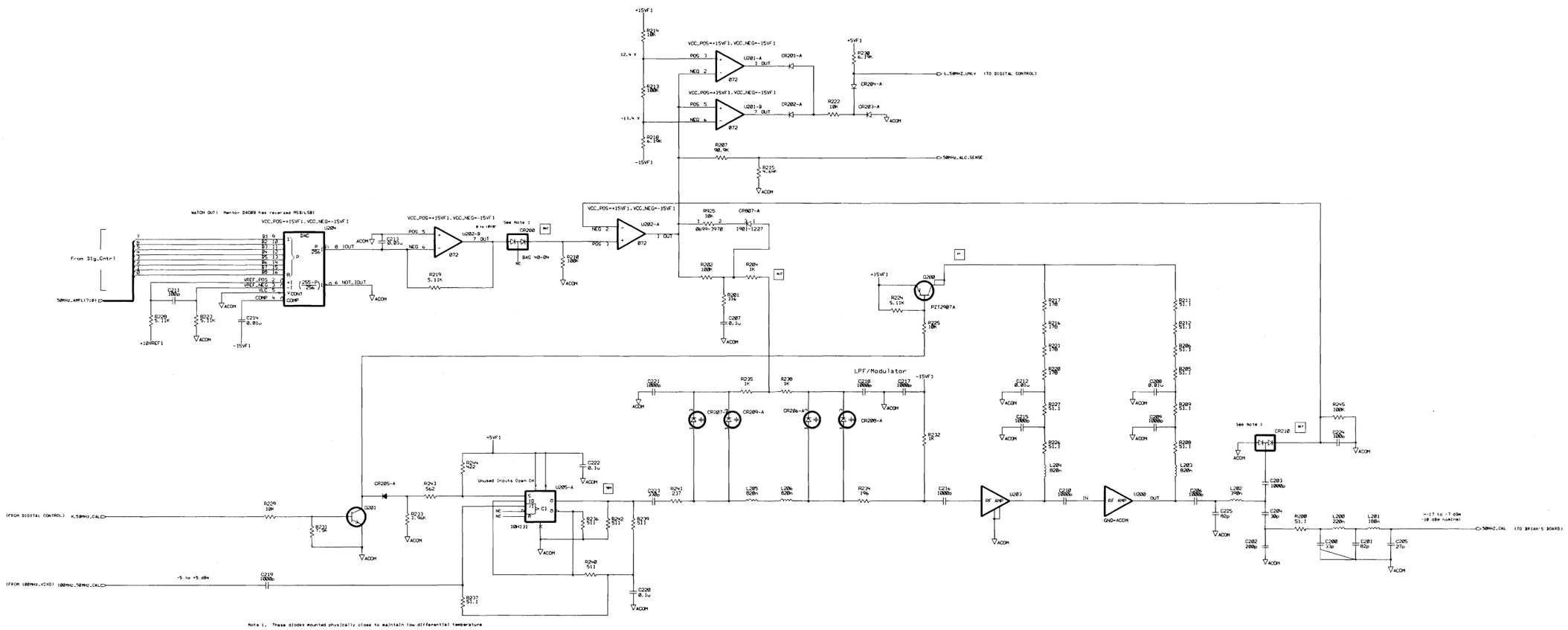

50MHz CALIBRATOR

HP RESTRICTED
THIS DOCUMENT CONTAINS CONFIDENTIAL, PROPRIETARY INFORMATION THAT IS HEWLETT-PACKARD (HP) PROPERTY. DO NOT DISCLOSE TO OR DUPLICATE FOR OTHERS EXCEPT AS AUTHORIZED BY HP.

LAST CHECKED	DATE	SCHEMATIC, PWA MOSQUITO 2 FETOP	HEWLETT PACKARD 5100
ENGINEER	SHEET 13 OF 13	TITLE HP_MOSQ2_FETOP/CA3844/50MHz_Calibrator PATHNAME Sheet1	E4403-60001 PART NUMBER
DRAWN BY	SIZE D		
	CA3844 ASSY. REV.	A3844 DRG. REV. / 13 PAGE / 13 OF	D-E4403-60001-1 DWG. NO.

Component-Level Information Packet for E4403-60053

Reference /Third Converter (3.0 GHz), PFR

Agilent Technologies

Agilent Part Number: E4403-90006
Printed in Malaysia April 2001

Notice

The information contained in this document is subject to change without notice. Agilent Technologies makes no warranty of any kind with regard to this material, including but not limited to, the implied warranties of merchantability and fitness for a particular purpose. Agilent Technologies shall not be liable for errors contained herein or for incidental or consequential damages in connection with the furnishing, performance, or use of this material.

© Copyright Agilent Technologies Inc. 2000, 2001
All Rights Reserved. Reproduction, adaptation, or translation without prior written permission is prohibited, except as allowed under the copyright laws.

The E4403-60053 includes everything in the E4403-60001, plus the U900 OCXO, known as a Precision Frequency Reference or "PFR." Refer to the CLIP for the E4403-60001 for more information. U900 is shown on the first schematic page of the E4403-60001.

Agilent Part Number E4403-60053
Reference/Third Converter (3.0 GHz), PFR

Reference Designator	Agilent Part Number	Qty	Description	Mgr Code	Mfr Part Number
A8A1A1	E4403-60001	1	Reference/Third Converter (3.0 GHz)	09507	E4403-60001
U900	1813-1065	1	CLK-OSC-XTAL STD 10.000-MHz 0.05%	00278	1813-1065

Component-Level Information Packet for E4401-60036

Precision Frequency Reference

Agilent Technologies

Agilent Part Number: E4401-90128
Printed in Malaysia April 2001

Notice

The information contained in this document is subject to change without notice. Agilent Technologies makes no warranty of any kind with regard to this material, including but not limited to, the implied warranties of merchantability and fitness for a particular purpose. Agilent Technologies shall not be liable for errors contained herein or for incidental or consequential damages in connection with the furnishing, performance, or use of this material.

© Copyright Agilent Technologies Inc. 2000, 2001
All Rights Reserved. Reproduction, adaptation, or translation without prior written permission is prohibited, except as allowed under the copyright laws.

Agilent Part Number E4401-60036
Precision Frequency Reference

Reference Designator	Agilent Part Number	Qty	Description	Mgr Code	Mfr Part Number
C1	0160-7798	1	CAP-FXD 0.1uF +-10% 50 V CER X7R	06352	C2012X7R1H104K
C2	0160-7798	1	CAP-FXD 0.1uF +-10% 50 V CER X7R	06352	C2012X7R1H104K
C3	0160-7711	1	CAP-FXD 4700pF +-10% 50 V CER X7R	02010	06035C472KATRA
C4	0180-4287	1	CAP-FXD 10uF +-20% 35 V TA	02010	TAJD106M035
C5	0160-7798	1	CAP-FXD 0.1uF +-10% 50 V CER X7R	06352	C2012X7R1H104K
J1	1253-0620	1	CONN-POST TYPE 2.0-PIN-SPCG-MTG-END	13369	90309-106
L1	9140-1113	1	INDUCTOR 10uH +-5% 3.4W-mmX4.8LG-mm Q50	28480	9140-1113
P1	1250-0257	1	CONNECTOR-RF SMB MALE PC-W-STDFS 50-OHM	01380	413990-3
R1	0699-3970	1	RESISTOR 10K +-1% .063W TKF TC0+-200	09891	RK73H1J1002F
R2	0699-3999	1	RESISTOR 178K +-1% .063W TKF TC0+-200	09891	RK73H1J1783F
R3	0699-3972	1	RESISTOR 12.1K +-1% .063W TKF TC0+-200	09891	RK73H1J1212F
R4	0699-3968	1	RESISTOR 8.25K +-1% .063W TKF TC0+-200	09891	RK73H1J8251F
U1	1826-1872	1	IC PWR MGT-V-REG-ADJ-POS 4.975/5.025V 8	03406	LP2951ACM
U2	1813-1065	1	CLK-OSC-XTAL STD 10.000-MHZ 0.05%	00278	MC867X4-002W

5300 C-E4401-60036-2

SYM	REVISIONS	APPROVED	DATE
A	AS ISSUED /TM		

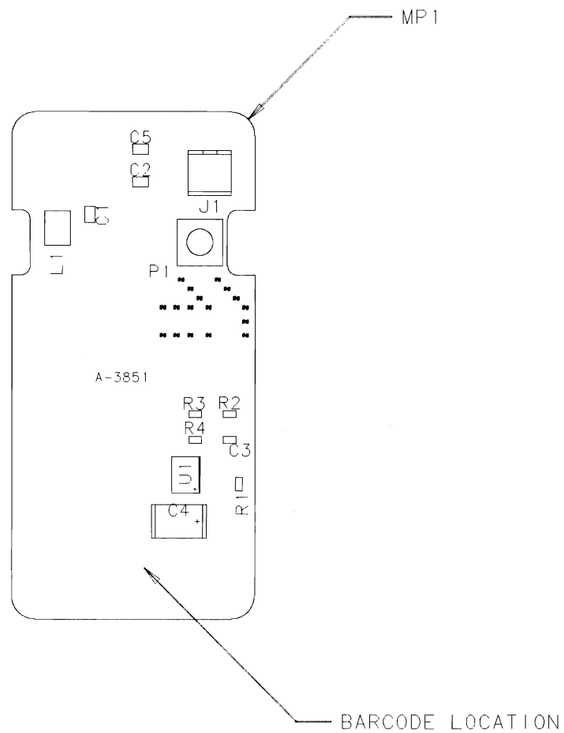

NOTES: UNLESS OTHERWISE SPECIFIED

1. USE RAW BOARD E4401-20036.
2. DO NOT LOAD CROSS-HATCHED COMPONENTS.

TOPSIDE

SEE MATERIAL LIST E4401-60036

HP PROPRIETARY
THIS DOCUMENT CONTAINS CONFIDENTIAL, PROPRIETARY INFORMATION THAT IS HEWLETT-PACKARD (HP) PROPERTY. DO NOT DISCLOSE TO OR DUPLICATE FOR OTHERS EXCEPT AS AUTHORIZED BY HP.

UNLESS OTHERWISE SPECIFIED, DIMENSIONS ARE IN INCHES.
TOLERANCES: XX.XXX .010 XX.XX .02
THIRD ANGLE PROJECTION
DO NOT SCALE THIS DRAWING

DRAWN BY | DATE
ENGINEER/CHECKER | DATE
RELEASE TO PROD. | DATE
SUPERSEDES DWG.

ASSEMBLY, PWA
PRECISION FREQUENCY REFERENCE
TITLE

MENTOR FILENAME
SCALE NONE
SHEET 1 OF 2
HEWLETT PACKARD
E4401-60036 PART NUMBER
C-E4401-60036-2

5300 C-E4401-60036-2

SYM	REVISIONS	APPROVED	DATE
A	AS ISSUED /TM		

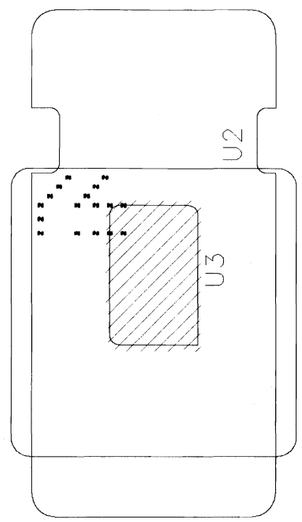

BOTTOMSIDE

HP PROPRIETARY
THIS DOCUMENT CONTAINS CONFIDENTIAL, PROPRIETARY INFORMATION THAT IS HEWLETT-PACKARD (HP) PROPERTY. DO NOT DISCLOSE TO OR DUPLICATE FOR OTHERS EXCEPT AS AUTHORIZED BY HP.

UNLESS OTHERWISE SPECIFIED, DIMENSIONS ARE IN INCHES.
TOLERANCES: XX.XXX .010 XX.XX .02
THIRD ANGLE PROJECTION
DO NOT SCALE THIS DRAWING

DRAWN BY DATE
ENGINEER/CHECKER DATE
RELEASE TO PROD. DATE
SUPERSEDES DWG.

ASSEMBLY, PWA
PRECISION FREQUENCY REFERENCE
TITLE

MENTOR FILENAME
SCALE NONE
SHEET 2 OF 2

HEWLETT PACKARD
E4401-60036
PART NUMBER
C-E4401-60036-2

B-E4401-60036-1

REV	INFORMATION	APPROVED	DATE
A	AS ISSUED /TM		

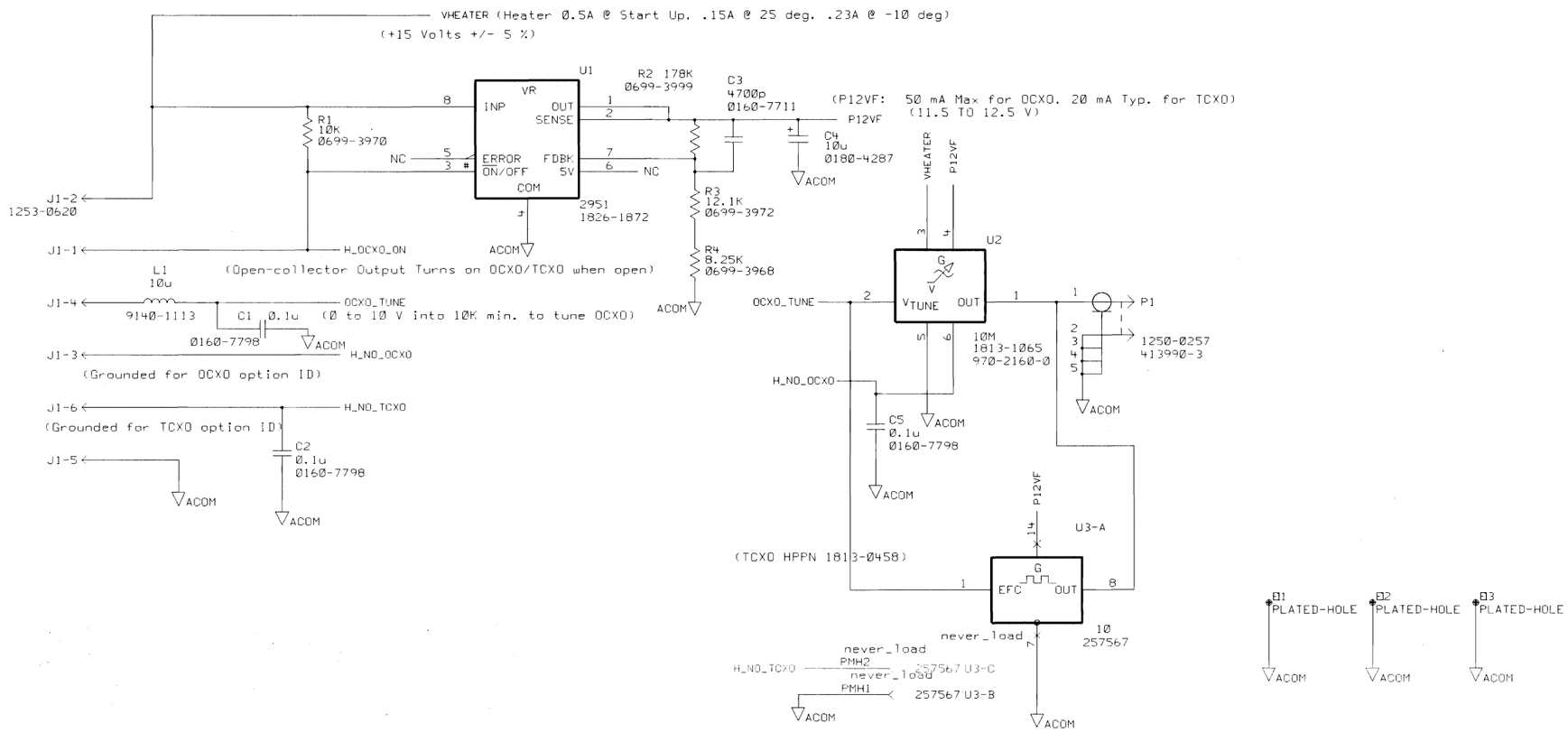

HP RESTRICTED

THIS DOCUMENT CONTAINS CONFIDENTIAL. PROPRIETARY INFORMATION THAT IS HEWLETT-PACKARD (HP) PROPERTY. DO NOT DISCLOSE TO OR DUPLICATE FOR OTHERS EXCEPT AS AUTHORIZED BY HP.

LAST CHECKED	DATE	SCHEMATIC. PWA PRECISION FREQUENCY REFERENCE	HEWLETT PACKARD 5300
ENGINEER	SHEET 1 OF 1	TITLE	
DRAWN BY	SIZE B	$HP_E4401/60036/AA3851/PreRef sheet1 PATHNAME	E4401-60036 PART NUMBER
	AA3851 ASSY. REV	A3851 BRD. REV / PAGE 1 OF 1	B-E4401-60036-1 DWG. NO.

Component-Level Information Packet for E4403-60057

3.0 GHz Front End/LO

Agilent Technologies

Agilent Part Number: E4403-90022
Printed in Malaysia April 2001

Notice

The information contained in this document is subject to change without notice. Agilent Technologies makes no warranty of any kind with regard to this material, including but not limited to, the implied warranties of merchantability and fitness for a particular purpose. Agilent Technologies shall not be liable for errors contained herein or for incidental or consequential damages in connection with the furnishing, performance, or use of this material.

© Copyright Agilent Technologies Inc. 2000, 2001
All Rights Reserved. Reproduction, adaptation, or translation without prior written permission is prohibited, except as allowed under the copyright laws.

Agilent Part Number E4403-60057
3.0 GHz Front End/LO

Reference Designator	Agilent Part Number	Qty	Description	Mgr Code	Mfr Part Number
C1	0160-7835	1	CAP-FXD 100pF +-5% 50 V CER C0G	02010	06035A101JAT
C2	0160-7835	1	CAP-FXD 100pF +-5% 50 V CER C0G	02010	06035A101JAT
C3	0160-7847	1	CAP-FXD 2.2pF +-11.36% 50 V CER C0G	02010	06035A2R2CAT
C230	0160-7798	1	CAP-FXD 0.1uF +-10% 50 V CER X7R	06352	C2012X7R1H104K
C284	0160-7751	1	CAP-FXD 0.01uF +-10% 50 V CER X7R	02010	06035C103KAT
C285	0160-7751	1	CAP-FXD 0.01uF +-10% 50 V CER X7R	02010	06035C103KAT
C287	0160-7751	1	CAP-FXD 0.01uF +-10% 50 V CER X7R	02010	06035C103KAT
C288	0160-7751	1	CAP-FXD 0.01uF +-10% 50 V CER X7R	02010	06035C103KAT
C290	0160-7751	1	CAP-FXD 0.01uF +-10% 50 V CER X7R	02010	06035C103KAT
C291	0160-7751	1	CAP-FXD 0.01uF +-10% 50 V CER X7R	02010	06035C103KAT
C292	0160-7798	1	CAP-FXD 0.1uF +-10% 50 V CER X7R	06352	C2012X7R1H104K
C293	0160-7751	1	CAP-FXD 0.01uF +-10% 50 V CER X7R	02010	06035C103KAT
C294	0160-7749	1	CAP-FXD 22pF +-5% 50 V CER C0G	02010	06035A220JAT
C295	0160-7751	1	CAP-FXD 0.01uF +-10% 50 V CER X7R	02010	06035C103KAT
C298	0160-7751	1	CAP-FXD 0.01uF +-10% 50 V CER X7R	02010	06035C103KAT
C468	0160-7749	1	CAP-FXD 22pF +-5% 50 V CER C0G	02010	06035A220JAT
C469	0160-7855	1	CAP-FXD 33pF +-5% 50 V CER C0G	02010	06035A330JAT
C470	0160-7859	1	CAP-FXD 3900pF +-10% 50 V CER X7R	02010	06035C392KAT
C471	0180-4538	1	CAP-FXD 100uF +-20% 10 V TA	12340	T495X107M010AS
C472	0180-4538	1	CAP-FXD 100uF +-20% 10 V TA	12340	T495X107M010AS
C476	0160-7712	1	CAP-FXD 1500pF +-10% 50 V CER X7R	02010	06035C152KATRA
C477	0160-7748	1	CAP-FXD 1000pF +-10% 50 V CER X7R	02010	06035C102KAT
C478	0160-7748	1	CAP-FXD 1000pF +-10% 50 V CER X7R	02010	06035C102KAT
C479	0160-7748	1	CAP-FXD 1000pF +-10% 50 V CER X7R	02010	06035C102KAT
C480	0160-7516	1	CAP-FXD 330pF +-5% 50 V CER C0G	06352	C1608COG1H331J
C481	0160-7855	1	CAP-FXD 33pF +-5% 50 V CER C0G	02010	06035A330JAT
C482	0160-7855	1	CAP-FXD 33pF +-5% 50 V CER C0G	02010	06035A330JAT
C483	0160-7849	1	CAP-FXD 220pF +-5% 50 V CER C0G	02010	06035A221JAT

Agilent Part Number E4403-60057
3.0 GHz Front End/LO

Reference Designator	Agilent Part Number	Qty	Description	Mgr Code	Mfr Part Number
C484	0160-7849	1	CAP-FXD 220pF +-5% 50 V CER C0G	02010	06035A221JAT
C485	0160-7849	1	CAP-FXD 220pF +-5% 50 V CER C0G	02010	06035A221JAT
C486	0160-7849	1	CAP-FXD 220pF +-5% 50 V CER C0G	02010	06035A221JAT
C487	0160-7849	1	CAP-FXD 220pF +-5% 50 V CER C0G	02010	06035A221JAT
C488	0160-7849	1	CAP-FXD 220pF +-5% 50 V CER C0G	02010	06035A221JAT
C489	0160-7849	1	CAP-FXD 220pF +-5% 50 V CER C0G	02010	06035A221JAT
C493	0160-7798	1	CAP-FXD 0.1uF +-10% 50 V CER X7R	06352	C2012X7R1H104K
C501	0160-7798	1	CAP-FXD 0.1uF +-10% 50 V CER X7R	06352	C2012X7R1H104K
C502	0160-7798	1	CAP-FXD 0.1uF +-10% 50 V CER X7R	06352	C2012X7R1H104K
C509	0180-3751	1	CAP-FXD 1uF +-20% 35 V TA	02010	TAJB105M035
C510	0160-7866	1	CAP-FXD 5600pF +-10% 50 V CER X7R	02010	06035C562KAT
C512	0180-3751	1	CAP-FXD 1uF +-20% 35 V TA	02010	TAJB105M035
C514	0160-7749	1	CAP-FXD 22pF +-5% 50 V CER C0G	02010	06035A220JAT
C515	0180-3751	1	CAP-FXD 1uF +-20% 35 V TA	02010	TAJB105M035
C516	0180-3751	1	CAP-FXD 1uF +-20% 35 V TA	02010	TAJB105M035
C517	0180-3751	1	CAP-FXD 1uF +-20% 35 V TA	02010	TAJB105M035
C518	0180-3751	1	CAP-FXD 1uF +-20% 35 V TA	02010	TAJB105M035
C519	0160-7868	1	CAP-FXD 68pF +-5% 50 V CER C0G	02010	06035A680JAT
C529	0180-4116	1	CAP-FXD 22uF +-20% 20 V TA	02010	TAJD226M020
C530	0180-4116	1	CAP-FXD 22uF +-20% 20 V TA	02010	TAJD226M020
C531	0180-4116	1	CAP-FXD 22uF +-20% 20 V TA	02010	TAJD226M020
C532	0180-4116	1	CAP-FXD 22uF +-20% 20 V TA	02010	TAJD226M020
C533	0180-4116	1	CAP-FXD 22uF +-20% 20 V TA	02010	TAJD226M020
C534	0180-4116	1	CAP-FXD 22uF +-20% 20 V TA	02010	TAJD226M020
C535	0180-4116	1	CAP-FXD 22uF +-20% 20 V TA	02010	TAJD226M020
C536	0180-4116	1	CAP-FXD 22uF +-20% 20 V TA	02010	TAJD226M020
C537	0180-4116	1	CAP-FXD 22uF +-20% 20 V TA	02010	TAJD226M020
C539	0180-4918	1	CAP-FXD 100uF +-20% 10 V TA	05524	293D107X0010D2
C540	0180-3755	1	CAP-FXD 33uF +-20% 10 V TA	02010	TAJD336M010
C541	0180-3755	1	CAP-FXD 33uF +-20% 10 V TA	02010	TAJD336M010

 **Indicates factory-selected value*

Agilent Part Number E4403-60057
3.0 GHz Front End/LO

Reference Designator	Agilent Part Number	Qty	Description	Mgr Code	Mfr Part Number
C546	0160-7751	1	CAP-FXD 0.01uF +-10% 50 V CER X7R	02010	06035C103KAT
C551	0160-7751	1	CAP-FXD 0.01uF +-10% 50 V CER X7R	02010	06035C103KAT
C552	0160-7751	1	CAP-FXD 0.01uF +-10% 50 V CER X7R	02010	06035C103KAT
C553	0160-7751	1	CAP-FXD 0.01uF +-10% 50 V CER X7R	02010	06035C103KAT
C554	0160-7751	1	CAP-FXD 0.01uF +-10% 50 V CER X7R	02010	06035C103KAT
C555	0160-7751	1	CAP-FXD 0.01uF +-10% 50 V CER X7R	02010	06035C103KAT
C556	0160-7751	1	CAP-FXD 0.01uF +-10% 50 V CER X7R	02010	06035C103KAT
C557	0160-7751	1	CAP-FXD 0.01uF +-10% 50 V CER X7R	02010	06035C103KAT
C558	0160-7751	1	CAP-FXD 0.01uF +-10% 50 V CER X7R	02010	06035C103KAT
C559	0160-7751	1	CAP-FXD 0.01uF +-10% 50 V CER X7R	02010	06035C103KAT
C560	0160-7751	1	CAP-FXD 0.01uF +-10% 50 V CER X7R	02010	06035C103KAT
C561	0160-7751	1	CAP-FXD 0.01uF +-10% 50 V CER X7R	02010	06035C103KAT
C562	0160-7751	1	CAP-FXD 0.01uF +-10% 50 V CER X7R	02010	06035C103KAT
C563	0160-7751	1	CAP-FXD 0.01uF +-10% 50 V CER X7R	02010	06035C103KAT
C565	0160-7751	1	CAP-FXD 0.01uF +-10% 50 V CER X7R	02010	06035C103KAT
C566	0160-7751	1	CAP-FXD 0.01uF +-10% 50 V CER X7R	02010	06035C103KAT
C567	0160-7751	1	CAP-FXD 0.01uF +-10% 50 V CER X7R	02010	06035C103KAT
C568	0160-7751	1	CAP-FXD 0.01uF +-10% 50 V CER X7R	02010	06035C103KAT
C569	0160-7751	1	CAP-FXD 0.01uF +-10% 50 V CER X7R	02010	06035C103KAT
C570	0180-4287	1	CAP-FXD 10uF +-20% 35 V TA	02010	TAJD106M035
C572	0160-7798	1	CAP-FXD 0.1uF +-10% 50 V CER X7R	06352	C2012X7R1H104K
C575	0180-4287	1	CAP-FXD 10uF +-20% 35 V TA	02010	TAJD106M035
C578	0160-7798	1	CAP-FXD 0.1uF +-10% 50 V CER X7R	06352	C2012X7R1H104K
C580	0160-7798	1	CAP-FXD 0.1uF +-10% 50 V CER X7R	06352	C2012X7R1H104K
C581	0160-7798	1	CAP-FXD 0.1uF +-10% 50 V CER X7R	06352	C2012X7R1H104K
C582	0160-7798	1	CAP-FXD 0.1uF +-10% 50 V CER X7R	06352	C2012X7R1H104K
C587	0160-7798	1	CAP-FXD 0.1uF +-10% 50 V CER X7R	06352	C2012X7R1H104K
C588	0160-7798	1	CAP-FXD 0.1uF +-10% 50 V CER X7R	06352	C2012X7R1H104K
C589	0160-7798	1	CAP-FXD 0.1uF +-10% 50 V CER X7R	06352	C2012X7R1H104K
C590	0160-7798	1	CAP-FXD 0.1uF +-10% 50 V CER X7R	06352	C2012X7R1H104K

**Indicates factory-selected value*

Agilent Part Number E4403-60057
3.0 GHz Front End/LO

Reference Designator	Agilent Part Number	Qty	Description	Mgr Code	Mfr Part Number
C591	0160-7798	1	CAP-FXD 0.1uF +-10% 50 V CER X7R	06352	C2012X7R1H104K
C597	0160-7798	1	CAP-FXD 0.1uF +-10% 50 V CER X7R	06352	C2012X7R1H104K
C598	0160-7798	1	CAP-FXD 0.1uF +-10% 50 V CER X7R	06352	C2012X7R1H104K
C599	0160-7798	1	CAP-FXD 0.1uF +-10% 50 V CER X7R	06352	C2012X7R1H104K
C600	0160-7751	1	CAP-FXD 0.01uF +-10% 50 V CER X7R	02010	06035C103KAT
C601	0160-7798	1	CAP-FXD 0.1uF +-10% 50 V CER X7R	06352	C2012X7R1H104K
C602	0160-7751	1	CAP-FXD 0.01uF +-10% 50 V CER X7R	02010	06035C103KAT
C603	0160-7751	1	CAP-FXD 0.01uF +-10% 50 V CER X7R	02010	06035C103KAT
C604	0160-7798	1	CAP-FXD 0.1uF +-10% 50 V CER X7R	06352	C2012X7R1H104K
C605	0160-7798	1	CAP-FXD 0.1uF +-10% 50 V CER X7R	06352	C2012X7R1H104K
C606	0160-7798	1	CAP-FXD 0.1uF +-10% 50 V CER X7R	06352	C2012X7R1H104K
C607	0160-7798	1	CAP-FXD 0.1uF +-10% 50 V CER X7R	06352	C2012X7R1H104K
C608	0160-7798	1	CAP-FXD 0.1uF +-10% 50 V CER X7R	06352	C2012X7R1H104K
C609	0160-7798	1	CAP-FXD 0.1uF +-10% 50 V CER X7R	06352	C2012X7R1H104K
C610	0160-7798	1	CAP-FXD 0.1uF +-10% 50 V CER X7R	06352	C2012X7R1H104K
C611	0160-7751	1	CAP-FXD 0.01uF +-10% 50 V CER X7R	02010	06035C103KAT
C612	0160-7798	1	CAP-FXD 0.1uF +-10% 50 V CER X7R	06352	C2012X7R1H104K
C613	0160-7751	1	CAP-FXD 0.01uF +-10% 50 V CER X7R	02010	06035C103KAT
C615	0160-7751	1	CAP-FXD 0.01uF +-10% 50 V CER X7R	02010	06035C103KAT
C618	0160-7798	1	CAP-FXD 0.1uF +-10% 50 V CER X7R	06352	C2012X7R1H104K
C619	0160-7798	1	CAP-FXD 0.1uF +-10% 50 V CER X7R	06352	C2012X7R1H104K
C620	0160-7798	1	CAP-FXD 0.1uF +-10% 50 V CER X7R	06352	C2012X7R1H104K
C621	0160-7798	1	CAP-FXD 0.1uF +-10% 50 V CER X7R	06352	C2012X7R1H104K
C622	0160-7798	1	CAP-FXD 0.1uF +-10% 50 V CER X7R	06352	C2012X7R1H104K
C623	0160-7798	1	CAP-FXD 0.1uF +-10% 50 V CER X7R	06352	C2012X7R1H104K
C624	0160-7798	1	CAP-FXD 0.1uF +-10% 50 V CER X7R	06352	C2012X7R1H104K
C625	0160-7798	1	CAP-FXD 0.1uF +-10% 50 V CER X7R	06352	C2012X7R1H104K
C626	0160-7798	1	CAP-FXD 0.1uF +-10% 50 V CER X7R	06352	C2012X7R1H104K
C627	0160-7798	1	CAP-FXD 0.1uF +-10% 50 V CER X7R	06352	C2012X7R1H104K
C628	0160-7798	1	CAP-FXD 0.1uF +-10% 50 V CER X7R	06352	C2012X7R1H104K

 **Indicates factory-selected value*

Agilent Part Number E4403-60057
3.0 GHz Front End/LO

Reference Designator	Agilent Part Number	Qty	Description	Mgr Code	Mfr Part Number
C629	0160-7798	1	CAP-FXD 0.1uF +-10% 50 V CER X7R	06352	C2012X7R1H104K
C630	0160-7798	1	CAP-FXD 0.1uF +-10% 50 V CER X7R	06352	C2012X7R1H104K
C631	0160-7798	1	CAP-FXD 0.1uF +-10% 50 V CER X7R	06352	C2012X7R1H104K
C632	0160-7798	1	CAP-FXD 0.1uF +-10% 50 V CER X7R	06352	C2012X7R1H104K
C634	0160-7798	1	CAP-FXD 0.1uF +-10% 50 V CER X7R	06352	C2012X7R1H104K
C635	0160-7798	1	CAP-FXD 0.1uF +-10% 50 V CER X7R	06352	C2012X7R1H104K
C636	0160-7748	1	CAP-FXD 1000pF +-10% 50 V CER X7R	02010	06035C102KAT
C638	0160-7798	1	CAP-FXD 0.1uF +-10% 50 V CER X7R	06352	C2012X7R1H104K
C645	0160-7988	1	CAP-FXD 470pF +-5% 50 V CER C0G	06352	C1608COG1H471J
C646	0160-7988	1	CAP-FXD 470pF +-5% 50 V CER C0G	06352	C1608COG1H471J
C647	0160-7874	1	CAP-FXD 8200pF +-10% 50 V CER X7R	02010	0603C822KAT
C648	0160-7809	1	CAP-FXD 0.015uF +-10% 50 V CER X7R	12340	C0603C153K5RAC
C649	0160-7874	1	CAP-FXD 8200pF +-10% 50 V CER X7R	02010	0603C822KAT
C650	0160-7809	1	CAP-FXD 0.015uF +-10% 50 V CER X7R	12340	C0603C153K5RAC
C651	0160-7711	1	CAP-FXD 4700pF +-10% 50 V CER X7R	02010	06035C472KATRA
C652	0160-7711	1	CAP-FXD 4700pF +-10% 50 V CER X7R	02010	06035C472KATRA
C653	0160-7748	1	CAP-FXD 1000pF +-10% 50 V CER X7R	02010	06035C102KAT
C654	0160-7748	1	CAP-FXD 1000pF +-10% 50 V CER X7R	02010	06035C102KAT
C656	0160-7748	1	CAP-FXD 1000pF +-10% 50 V CER X7R	02010	06035C102KAT
C657	0160-7781	1	CAP-FXD 2200pF +-10% 50 V CER X7R	02010	06035C222KAT
C658	0160-7781	1	CAP-FXD 2200pF +-10% 50 V CER X7R	02010	06035C222KAT
C660	0160-7798	1	CAP-FXD 0.1uF +-10% 50 V CER X7R	06352	C2012X7R1H104K
C661	0160-7798	1	CAP-FXD 0.1uF +-10% 50 V CER X7R	06352	C2012X7R1H104K
C695	0160-7751	1	CAP-FXD 0.01uF +-10% 50 V CER X7R	02010	06035C103KAT
C696	0160-7751	1	CAP-FXD 0.01uF +-10% 50 V CER X7R	02010	06035C103KAT
C697	0160-7751	1	CAP-FXD 0.01uF +-10% 50 V CER X7R	02010	06035C103KAT
C698	0160-7751	1	CAP-FXD 0.01uF +-10% 50 V CER X7R	02010	06035C103KAT
C699	0160-7751	1	CAP-FXD 0.01uF +-10% 50 V CER X7R	02010	06035C103KAT
C700	0160-7751	1	CAP-FXD 0.01uF +-10% 50 V CER X7R	02010	06035C103KAT
C703	0160-7835	1	CAP-FXD 100pF +-5% 50 V CER C0G	02010	06035A101JAT

Agilent Part Number E4403-60057
3.0 GHz Front End/LO

Reference Designator	Agilent Part Number	Qty	Description	Mgr Code	Mfr Part Number
C704	0160-7835	1	CAP-FXD 100pF +-5% 50 V CER C0G	02010	06035A101JAT
C705	0160-7832	1	CAP-FXD 1.5pF +-16.67% 50 V CER C0G	02010	06035A1R5CAT
C707	0160-7835	1	CAP-FXD 100pF +-5% 50 V CER C0G	02010	06035A101JAT
C708	0160-7835	1	CAP-FXD 100pF +-5% 50 V CER C0G	02010	06035A101JAT
C709	0160-7835	1	CAP-FXD 100pF +-5% 50 V CER C0G	02010	06035A101JAT
C710	0160-7847	1	CAP-FXD 2.2pF +-11.36% 50 V CER C0G	02010	06035A2R2CAT
C711	0160-7835	1	CAP-FXD 100pF +-5% 50 V CER C0G	02010	06035A101JAT
C712	0160-7748	1	CAP-FXD 1000pF +-10% 50 V CER X7R	02010	06035C102KAT
C713	0160-7835	1	CAP-FXD 100pF +-5% 50 V CER C0G	02010	06035A101JAT
C714	0160-7830	1	CAP-FXD 1pF +-25% 50 V CER C0G	12340	C0603C109C5GAC
C715	0160-7835	1	CAP-FXD 100pF +-5% 50 V CER C0G	02010	06035A101JAT
C717	0160-7835	1	CAP-FXD 100pF +-5% 50 V CER C0G	02010	06035A101JAT
C718	0160-7835	1	CAP-FXD 100pF +-5% 50 V CER C0G	02010	06035A101JAT
C719	0160-7830	1	CAP-FXD 1pF +-25% 50 V CER C0G	12340	C0603C109C5GAC
C721	0160-7835	1	CAP-FXD 100pF +-5% 50 V CER C0G	02010	06035A101JAT
C722	0160-7835	1	CAP-FXD 100pF +-5% 50 V CER C0G	02010	06035A101JAT
C723	0160-7830	1	CAP-FXD 1pF +-25% 50 V CER C0G	12340	C0603C109C5GAC
C725	0160-7835	1	CAP-FXD 100pF +-5% 50 V CER C0G	02010	06035A101JAT
C726	0160-7835	1	CAP-FXD 100pF +-5% 50 V CER C0G	02010	06035A101JAT
C727	0160-7830	1	CAP-FXD 1pF +-25% 50 V CER C0G	12340	C0603C109C5GAC
C728	0160-7798	1	CAP-FXD 0.1uF +-10% 50 V CER X7R	06352	C2012X7R1H104K
C729	0160-7798	1	CAP-FXD 0.1uF +-10% 50 V CER X7R	06352	C2012X7R1H104K
C730	0160-7798	1	CAP-FXD 0.1uF +-10% 50 V CER X7R	06352	C2012X7R1H104K
C800	0160-7798	1	CAP-FXD 0.1uF +-10% 50 V CER X7R	06352	C2012X7R1H104K
C801	0160-7751	1	CAP-FXD 0.01uF +-10% 50 V CER X7R	02010	06035C103KAT
C802	0160-7751	1	CAP-FXD 0.01uF +-10% 50 V CER X7R	02010	06035C103KAT
C805	0160-7798	1	CAP-FXD 0.1uF +-10% 50 V CER X7R	06352	C2012X7R1H104K
C810	0160-7835	1	CAP-FXD 100pF +-5% 50 V CER C0G	02010	06035A101JAT
C812	0160-7835	1	CAP-FXD 100pF +-5% 50 V CER C0G	02010	06035A101JAT
C813	0160-7835	1	CAP-FXD 100pF +-5% 50 V CER C0G	02010	06035A101JAT

 **Indicates factory-selected value*

Agilent Part Number E4403-60057
3.0 GHz Front End/LO

Reference Designator	Agilent Part Number	Qty	Description	Mgr Code	Mfr Part Number
C814	0160-7835	1	CAP-FXD 100pF +-5% 50 V CER C0G	02010	06035A101JAT
C815	0160-7798	1	CAP-FXD 0.1uF +-10% 50 V CER X7R	06352	C2012X7R1H104K
C816	0160-7835	1	CAP-FXD 100pF +-5% 50 V CER C0G	02010	06035A101JAT
C817	0160-7748	1	CAP-FXD 1000pF +-10% 50 V CER X7R	02010	06035C102KAT
C818	0160-7835	1	CAP-FXD 100pF +-5% 50 V CER C0G	02010	06035A101JAT
C819	0160-7835	1	CAP-FXD 100pF +-5% 50 V CER C0G	02010	06035A101JAT
C820	0160-7835	1	CAP-FXD 100pF +-5% 50 V CER C0G	02010	06035A101JAT
C925	0160-7835	1	CAP-FXD 100pF +-5% 50 V CER C0G	02010	06035A101JAT
C926	0160-7835	1	CAP-FXD 100pF +-5% 50 V CER C0G	02010	06035A101JAT
C927	0160-7988	1	CAP-FXD 470pF +-5% 50 V CER C0G	06352	C1608COG1H471J
C928	0160-7988	1	CAP-FXD 470pF +-5% 50 V CER C0G	06352	C1608COG1H471J
C930	0160-7859	1	CAP-FXD 3900pF +-10% 50 V CER X7R	02010	06035C392KAT
C950	0160-7835	1	CAP-FXD 100pF +-5% 50 V CER C0G	02010	06035A101JAT
C951	0160-7835	1	CAP-FXD 100pF +-5% 50 V CER C0G	02010	06035A101JAT
C952	0160-7835	1	CAP-FXD 100pF +-5% 50 V CER C0G	02010	06035A101JAT
C953	0160-7835	1	CAP-FXD 100pF +-5% 50 V CER C0G	02010	06035A101JAT
C954	0160-7751	1	CAP-FXD 0.01uF +-10% 50 V CER X7R	02010	06035C103KAT
C955	0160-7835	1	CAP-FXD 100pF +-5% 50 V CER C0G	02010	06035A101JAT
C983	0180-3751	1	CAP-FXD 1uF +-20% 35 V TA	02010	TAJB105M035
C984	0160-5944	1	CAP-FXD 0.047uF +-10% 50 V CER X7R	02010	08055C473KATA
C985	0160-5944	1	CAP-FXD 0.047uF +-10% 50 V CER X7R	02010	08055C473KATA
C986	0160-7781	1	CAP-FXD 2200pF +-10% 50 V CER X7R	02010	06035C222KAT
C987	0180-3751	1	CAP-FXD 1uF +-20% 35 V TA	02010	TAJB105M035
C988	0180-3751	1	CAP-FXD 1uF +-20% 35 V TA	02010	TAJB105M035
C989	0160-7798	1	CAP-FXD 0.1uF +-10% 50 V CER X7R	06352	C2012X7R1H104K
C990	0180-3751	1	CAP-FXD 1uF +-20% 35 V TA	02010	TAJB105M035
C991	0180-3751	1	CAP-FXD 1uF +-20% 35 V TA	02010	TAJB105M035
C992	0180-3751	1	CAP-FXD 1uF +-20% 35 V TA	02010	TAJB105M035
C993	0180-3751	1	CAP-FXD 1uF +-20% 35 V TA	02010	TAJB105M035
C994	0180-3751	1	CAP-FXD 1uF +-20% 35 V TA	02010	TAJB105M035

Agilent Part Number E4403-60057
3.0 GHz Front End/LO

Reference Designator	Agilent Part Number	Qty	Description	Mgr Code	Mfr Part Number
C995	0180-3751	1	CAP-FXD 1uF +-20% 35 V TA	02010	TAJB105M035
C996	0180-3751	1	CAP-FXD 1uF +-20% 35 V TA	02010	TAJB105M035
C997	0180-3751	1	CAP-FXD 1uF +-20% 35 V TA	02010	TAJB105M035
C998	0180-4116	1	CAP-FXD 22uF +-20% 20 V TA	02010	TAJD226M020
C999	0180-3751	1	CAP-FXD 1uF +-20% 35 V TA	02010	TAJB105M035
C1000	0180-4116	1	CAP-FXD 22uF +-20% 20 V TA	02010	TAJD226M020
C1001	0160-7798	1	CAP-FXD 0.1uF +-10% 50 V CER X7R	06352	C2012X7R1H104K
C1003	0180-4287	1	CAP-FXD 10uF +-20% 35 V TA	02010	TAJD106M035
C1004	0180-3751	1	CAP-FXD 1uF +-20% 35 V TA	02010	TAJB105M035
C1005	0180-4116	1	CAP-FXD 22uF +-20% 20 V TA	02010	TAJD226M020
C1006	0180-4116	1	CAP-FXD 22uF +-20% 20 V TA	02010	TAJD226M020
C1007	0180-4116	1	CAP-FXD 22uF +-20% 20 V TA	02010	TAJD226M020
C1008	0180-3751	1	CAP-FXD 1uF +-20% 35 V TA	02010	TAJB105M035
C1009	0180-4116	1	CAP-FXD 22uF +-20% 20 V TA	02010	TAJD226M020
C1010	0180-4116	1	CAP-FXD 22uF +-20% 20 V TA	02010	TAJD226M020
C1011	0180-4116	1	CAP-FXD 22uF +-20% 20 V TA	02010	TAJD226M020
C1012	0180-4116	1	CAP-FXD 22uF +-20% 20 V TA	02010	TAJD226M020
C1013	0180-4116	1	CAP-FXD 22uF +-20% 20 V TA	02010	TAJD226M020
C1014	0180-4116	1	CAP-FXD 22uF +-20% 20 V TA	02010	TAJD226M020
C1015	0180-4287	1	CAP-FXD 10uF +-20% 35 V TA	02010	TAJD106M035
C1016	0180-4116	1	CAP-FXD 22uF +-20% 20 V TA	02010	TAJD226M020
C1018	0180-3751	1	CAP-FXD 1uF +-20% 35 V TA	02010	TAJB105M035
C1019	0160-7798	1	CAP-FXD 0.1uF +-10% 50 V CER X7R	06352	C2012X7R1H104K
C1020	0160-7873	1	CAP-FXD 820pF +-10% 50 V CER X7R	02010	06035C821KAT
C1021	0160-5944	1	CAP-FXD 0.047uF +-10% 50 V CER X7R	02010	08055C473KATA
C1022	0160-7751	1	CAP-FXD 0.01uF +-10% 50 V CER X7R	02010	06035C103KAT
C1023	0160-7751	1	CAP-FXD 0.01uF +-10% 50 V CER X7R	02010	06035C103KAT
C1024	0160-7751	1	CAP-FXD 0.01uF +-10% 50 V CER X7R	02010	06035C103KAT
C1025	0160-7751	1	CAP-FXD 0.01uF +-10% 50 V CER X7R	02010	06035C103KAT
C1026	0160-7751	1	CAP-FXD 0.01uF +-10% 50 V CER X7R	02010	06035C103KAT

 **Indicates factory-selected value*

Agilent Part Number E4403-60057
3.0 GHz Front End/LO

Reference Designator	Agilent Part Number	Qty	Description	Mgr Code	Mfr Part Number
C1027	0160-7751	1	CAP-FXD 0.01uF +-10% 50 V CER X7R	02010	06035C103KAT
C1028	0160-7751	1	CAP-FXD 0.01uF +-10% 50 V CER X7R	02010	06035C103KAT
C1029	0160-7751	1	CAP-FXD 0.01uF +-10% 50 V CER X7R	02010	06035C103KAT
C1030	0160-7751	1	CAP-FXD 0.01uF +-10% 50 V CER X7R	02010	06035C103KAT
C1031	0160-7751	1	CAP-FXD 0.01uF +-10% 50 V CER X7R	02010	06035C103KAT
C1032	0160-7751	1	CAP-FXD 0.01uF +-10% 50 V CER X7R	02010	06035C103KAT
C1033	0160-7751	1	CAP-FXD 0.01uF +-10% 50 V CER X7R	02010	06035C103KAT
C1034	0160-7751	1	CAP-FXD 0.01uF +-10% 50 V CER X7R	02010	06035C103KAT
C1035	0160-7835	1	CAP-FXD 100pF +-5% 50 V CER C0G	02010	06035A101JAT
C1036	0160-7835	1	CAP-FXD 100pF +-5% 50 V CER C0G	02010	06035A101JAT
C1037	0160-7798	1	CAP-FXD 0.1uF +-10% 50 V CER X7R	06352	C2012X7R1H104K
C1038	0160-7798	1	CAP-FXD 0.1uF +-10% 50 V CER X7R	06352	C2012X7R1H104K
C1039	0160-7798	1	CAP-FXD 0.1uF +-10% 50 V CER X7R	06352	C2012X7R1H104K
C1040	0160-7798	1	CAP-FXD 0.1uF +-10% 50 V CER X7R	06352	C2012X7R1H104K
C1041	0160-7798	1	CAP-FXD 0.1uF +-10% 50 V CER X7R	06352	C2012X7R1H104K
C1043	0180-4228	1	CAP-FXD 47uF +-20% 10 V TA	02010	TAJD476M010
C1046	0160-6444	1	CAP-FXD 0.022uF +-10% 50 V CER X7R	02010	08055C223KAT
C1047	0160-7748	1	CAP-FXD 1000pF +-10% 50 V CER X7R	02010	06035C102KAT
C1050	0160-7751	1	CAP-FXD 0.01uF +-10% 50 V CER X7R	02010	06035C103KAT
C1052	0160-7748	1	CAP-FXD 1000pF +-10% 50 V CER X7R	02010	06035C102KAT
C1053	0160-7748	1	CAP-FXD 1000pF +-10% 50 V CER X7R	02010	06035C102KAT
C1054	0180-3751	1	CAP-FXD 1uF +-20% 35 V TA	02010	TAJB105M035
C1057	0180-3751	1	CAP-FXD 1uF +-20% 35 V TA	02010	TAJB105M035
C1058	0160-7751	1	CAP-FXD 0.01uF +-10% 50 V CER X7R	02010	06035C103KAT
C1059	0160-7751	1	CAP-FXD 0.01uF +-10% 50 V CER X7R	02010	06035C103KAT
C1060	0160-7751	1	CAP-FXD 0.01uF +-10% 50 V CER X7R	02010	06035C103KAT
C1062	0160-7751	1	CAP-FXD 0.01uF +-10% 50 V CER X7R	02010	06035C103KAT
C1063	0160-7751	1	CAP-FXD 0.01uF +-10% 50 V CER X7R	02010	06035C103KAT
C1064	0160-7751	1	CAP-FXD 0.01uF +-10% 50 V CER X7R	02010	06035C103KAT
C1065	0160-7751	1	CAP-FXD 0.01uF +-10% 50 V CER X7R	02010	06035C103KAT

Agilent Part Number E4403-60057
3.0 GHz Front End/LO

Reference Designator	Agilent Part Number	Qty	Description	Mgr Code	Mfr Part Number
C1069	0160-7798	1	CAP-FXD 0.1uF +-10% 50 V CER X7R	06352	C2012X7R1H104K
C1071	0160-7798	1	CAP-FXD 0.1uF +-10% 50 V CER X7R	06352	C2012X7R1H104K
C1072	0160-7798	1	CAP-FXD 0.1uF +-10% 50 V CER X7R	06352	C2012X7R1H104K
C1074	0180-3751	1	CAP-FXD 1uF +-20% 35 V TA	02010	TAJB105M035
C1076	0180-3751	1	CAP-FXD 1uF +-20% 35 V TA	02010	TAJB105M035
C1077	0180-4116	1	CAP-FXD 22uF +-20% 20 V TA	02010	TAJD226M020
C1078	0180-3751	1	CAP-FXD 1uF +-20% 35 V TA	02010	TAJB105M035
C1079	0160-7751	1	CAP-FXD 0.01uF +-10% 50 V CER X7R	02010	06035C103KAT
C1080	0160-7835	1	CAP-FXD 100pF +-5% 50 V CER C0G	02010	06035A101JAT
C1200	0160-7798	1	CAP-FXD 0.1uF +-10% 50 V CER X7R	06352	C2012X7R1H104K
C1201	0160-7798	1	CAP-FXD 0.1uF +-10% 50 V CER X7R	06352	C2012X7R1H104K
C1203	0160-7751	1	CAP-FXD 0.01uF +-10% 50 V CER X7R	02010	06035C103KAT
C1205	0160-7798	1	CAP-FXD 0.1uF +-10% 50 V CER X7R	06352	C2012X7R1H104K
C1206	0180-3751	1	CAP-FXD 1uF +-20% 35 V TA	02010	TAJB105M035
C1300	0160-7849	1	CAP-FXD 220pF +-5% 50 V CER C0G	02010	06035A221JAT
C1301	0160-7859	1	CAP-FXD 3900pF +-10% 50 V CER X7R	02010	06035C392KAT
C1302	0160-7751	1	CAP-FXD 0.01uF +-10% 50 V CER X7R	02010	06035C103KAT
C1304	0160-6444	1	CAP-FXD 0.022uF +-10% 50 V CER X7R	02010	08055C223KAT
C1322	0160-7736	1	CAP-FXD 1uF +-10% 16 V CER X7R	06352	C3216X7R1C105K
C1400	0160-7835	1	CAP-FXD 100pF +-5% 50 V CER C0G	02010	06035A101JAT
C1401	0160-7835	1	CAP-FXD 100pF +-5% 50 V CER C0G	02010	06035A101JAT
C1402	0160-7835	1	CAP-FXD 100pF +-5% 50 V CER C0G	02010	06035A101JAT
C1404	0160-7749	1	CAP-FXD 22pF +-5% 50 V CER C0G	02010	06035A220JAT
C1405	0160-7749	1	CAP-FXD 22pF +-5% 50 V CER C0G	02010	06035A220JAT
C1406	0160-7749	1	CAP-FXD 22pF +-5% 50 V CER C0G	02010	06035A220JAT
C1408	0160-7749	1	CAP-FXD 22pF +-5% 50 V CER C0G	02010	06035A220JAT
C1409	0160-7749	1	CAP-FXD 22pF +-5% 50 V CER C0G	02010	06035A220JAT
C1411	0160-7835	1	CAP-FXD 100pF +-5% 50 V CER C0G	02010	06035A101JAT
C1412	0160-7749	1	CAP-FXD 22pF +-5% 50 V CER C0G	02010	06035A220JAT
C1413	0160-7749	1	CAP-FXD 22pF +-5% 50 V CER C0G	02010	06035A220JAT

 **Indicates factory-selected value*

Agilent Part Number E4403-60057
3.0 GHz Front End/LO

Reference Designator	Agilent Part Number	Qty	Description	Mgr Code	Mfr Part Number
C1414	0160-7835	1	CAP-FXD 100pF +-5% 50 V CER C0G	02010	06035A101JAT
C1415	0160-7749	1	CAP-FXD 22pF +-5% 50 V CER C0G	02010	06035A220JAT
C1416	0160-7835	1	CAP-FXD 100pF +-5% 50 V CER C0G	02010	06035A101JAT
C1417	0160-7749	1	CAP-FXD 22pF +-5% 50 V CER C0G	02010	06035A220JAT
C1418	0160-7835	1	CAP-FXD 100pF +-5% 50 V CER C0G	02010	06035A101JAT
C1419	0160-7751	1	CAP-FXD 0.01uF +-10% 50 V CER X7R	02010	06035C103KAT
C1420	0160-7830	1	CAP-FXD 1pF +-25% 50 V CER C0G	12340	C0603C109C5GAC
C1425	0160-7751	1	CAP-FXD 0.01uF +-10% 50 V CER X7R	02010	06035C103KAT
C1426	0160-7869	1	CAP-FXD 680pF +-10% 50 V CER X7R	02010	06035C681KAT
C1427	0160-7751	1	CAP-FXD 0.01uF +-10% 50 V CER X7R	02010	06035C103KAT
C1428	0160-7798	1	CAP-FXD 0.1uF +-10% 50 V CER X7R	06352	C2012X7R1H104K
C1429	0160-7798	1	CAP-FXD 0.1uF +-10% 50 V CER X7R	06352	C2012X7R1H104K
C1430	0160-7798	1	CAP-FXD 0.1uF +-10% 50 V CER X7R	06352	C2012X7R1H104K
C1431	0160-7798	1	CAP-FXD 0.1uF +-10% 50 V CER X7R	06352	C2012X7R1H104K
C1432	0160-7712	1	CAP-FXD 1500pF +-10% 50 V CER X7R	02010	06035C152KATRA
C1433	0180-4287	1	CAP-FXD 10uF +-20% 35 V TA	02010	TAJD106M035
C1500	0160-7798	1	CAP-FXD 0.1uF +-10% 50 V CER X7R	06352	C2012X7R1H104K
C1501	0160-7798	1	CAP-FXD 0.1uF +-10% 50 V CER X7R	06352	C2012X7R1H104K
C1502	0160-7798	1	CAP-FXD 0.1uF +-10% 50 V CER X7R	06352	C2012X7R1H104K
C1503	0160-7798	1	CAP-FXD 0.1uF +-10% 50 V CER X7R	06352	C2012X7R1H104K
C1504	0160-7751	1	CAP-FXD 0.01uF +-10% 50 V CER X7R	02010	06035C103KAT
C1505	0160-7751	1	CAP-FXD 0.01uF +-10% 50 V CER X7R	02010	06035C103KAT
C1506	0160-7751	1	CAP-FXD 0.01uF +-10% 50 V CER X7R	02010	06035C103KAT
C1507	0160-7751	1	CAP-FXD 0.01uF +-10% 50 V CER X7R	02010	06035C103KAT
C1508	0160-7751	1	CAP-FXD 0.01uF +-10% 50 V CER X7R	02010	06035C103KAT
C1509	0160-7751	1	CAP-FXD 0.01uF +-10% 50 V CER X7R	02010	06035C103KAT
C1510	0160-7751	1	CAP-FXD 0.01uF +-10% 50 V CER X7R	02010	06035C103KAT
C1511	0160-7751	1	CAP-FXD 0.01uF +-10% 50 V CER X7R	02010	06035C103KAT
C1512	0160-7751	1	CAP-FXD 0.01uF +-10% 50 V CER X7R	02010	06035C103KAT
C1513	0160-7751	1	CAP-FXD 0.01uF +-10% 50 V CER X7R	02010	06035C103KAT

Agilent Part Number E4403-60057
3.0 GHz Front End/LO

Reference Designator	Agilent Part Number	Qty	Description	Mgr Code	Mfr Part Number
C1514	0160-7751	1	CAP-FXD 0.01uF +-10% 50 V CER X7R	02010	06035C103KAT
C1515	0160-7751	1	CAP-FXD 0.01uF +-10% 50 V CER X7R	02010	06035C103KAT
C1516	0160-7751	1	CAP-FXD 0.01uF +-10% 50 V CER X7R	02010	06035C103KAT
C1517	0160-7751	1	CAP-FXD 0.01uF +-10% 50 V CER X7R	02010	06035C103KAT
C1518	0160-7751	1	CAP-FXD 0.01uF +-10% 50 V CER X7R	02010	06035C103KAT
C1519	0160-7751	1	CAP-FXD 0.01uF +-10% 50 V CER X7R	02010	06035C103KAT
C1550	0160-7835	1	CAP-FXD 100pF +-5% 50 V CER C0G	02010	06035A101JAT
C1551	0160-7835	1	CAP-FXD 100pF +-5% 50 V CER C0G	02010	06035A101JAT
C1552	0160-7835	1	CAP-FXD 100pF +-5% 50 V CER C0G	02010	06035A101JAT
C1553	0160-7835	1	CAP-FXD 100pF +-5% 50 V CER C0G	02010	06035A101JAT
C1555	0160-7835	1	CAP-FXD 100pF +-5% 50 V CER C0G	02010	06035A101JAT
C1604	0160-7855	1	CAP-FXD 33pF +-5% 50 V CER C0G	02010	06035A330JAT
C1610	0160-7798	1	CAP-FXD 0.1uF +-10% 50 V CER X7R	06352	C2012X7R1H104K
C1650	0160-7950	1	CAP-FXD 0.068uF +-10% 50 V CER X7R	06352	C2012X7R1H683K
C1651	0180-4116	1	CAP-FXD 22uF +-20% 20 V TA	02010	TAJD226M020
C1652	0160-7798	1	CAP-FXD 0.1uF +-10% 50 V CER X7R	06352	C2012X7R1H104K
C1660	0160-7798	1	CAP-FXD 0.1uF +-10% 50 V CER X7R	06352	C2012X7R1H104K
C2029	0160-7835	1	CAP-FXD 100pF +-5% 50 V CER C0G	02010	06035A101JAT
C2030	0160-7751	1	CAP-FXD 0.01uF +-10% 50 V CER X7R	02010	06035C103KAT
C2031	0160-7751	1	CAP-FXD 0.01uF +-10% 50 V CER X7R	02010	06035C103KAT
C2032	0180-4918	1	CAP-FXD 100uF +-20% 10 V TA	05524	293D107X0010D2
C2033	0160-7751	1	CAP-FXD 0.01uF +-10% 50 V CER X7R	02010	06035C103KAT
C2034	0180-4918	1	CAP-FXD 100uF +-20% 10 V TA	05524	293D107X0010D2
C2035	0160-7749	1	CAP-FXD 22pF +-5% 50 V CER C0G	02010	06035A220JAT
C2036	0160-7751	1	CAP-FXD 0.01uF +-10% 50 V CER X7R	02010	06035C103KAT
C2038	0160-5978	1	CAP-FXD 2.2pF 50 V CER C0G	06352	C2012COG1H2R2 C
C2059	0160-7751	1	CAP-FXD 0.01uF +-10% 50 V CER X7R	02010	06035C103KAT
C2060	0180-4918	1	CAP-FXD 100uF +-20% 10 V TA	05524	293D107X0010D2
C2061	0160-7751	1	CAP-FXD 0.01uF +-10% 50 V CER X7R	02010	06035C103KAT

 **Indicates factory-selected value*

Agilent Part Number E4403-60057
3.0 GHz Front End/LO

Reference Designator	Agilent Part Number	Qty	Description	Mgr Code	Mfr Part Number
C5111	0160-7736	1	CAP-FXD 1uF +-10% 16 V CER X7R	06352	C3216X7R1C105K
CR7	1901-1227	1	DIODE-SWITCHING 75V 200MA 6NS TO-236	02910	BAS16
CR8	1901-1227	1	DIODE-SWITCHING 75V 200MA 6NS TO-236	02910	BAS16
CR9	1906-0291	1	DIODE-DUAL 70V 100MA T0-236AA	02910	BAV99
CR10	1906-0291	1	DIODE-DUAL 70V 100MA T0-236AA	02910	BAV99
CR11	1900-0078	1	DIODE-SCHOTTKY SM SIG	01542	HSMS-2800
CR12	1900-0078	1	DIODE-SCHOTTKY SM SIG	01542	HSMS-2800
CR13	1900-0078	1	DIODE-SCHOTTKY SM SIG	01542	HSMS-2800
CR14	1900-0078	1	DIODE-SCHOTTKY SM SIG	01542	HSMS-2800
CR15	1900-0078	1	DIODE-SCHOTTKY SM SIG	01542	HSMS-2800
CR16	1900-0078	1	DIODE-SCHOTTKY SM SIG	01542	HSMS-2800
CR17	1900-0293	1	DIODE-SCHOTTKY SM SIG	08852	M2X3340
CR20	1902-1424	1	DIODE-ZNR 5.6V 5% TO-236 (SOT-23)	06394	BZX84C5V6
CR50	1901-1459	1	DIODE-PWR-S 40V 500MA	36633	MBR0540T1
CR800	1900-0078	1	DIODE-SCHOTTKY SM SIG	01542	HSMS-2800
CR803	1900-0308	1	DIODE-PIN	01542	HSMP-4810
CR804	1900-0308	1	DIODE-PIN	01542	HSMP-4810
CR805	1900-0308	1	DIODE-PIN	01542	HSMP-4810
CR950	1900-0310	1	DIODE-PIN	08852	M5X3183
CR951	1900-0310	1	DIODE-PIN	08852	M5X3183
CR952	1900-0310	1	DIODE-PIN	08852	M5X3183
CR953	1900-0310	1	DIODE-PIN	08852	M5X3183
CR960	1900-0078	1	DIODE-SCHOTTKY SM SIG	01542	HSMS-2800
CR961	1901-1227	1	DIODE-SWITCHING 75V 200MA 6NS TO-236	02910	BAS16
CR962	1901-1227	1	DIODE-SWITCHING 75V 200MA 6NS TO-236	02910	BAS16
CR963	1901-1227	1	DIODE-SWITCHING 75V 200MA 6NS TO-236	02910	BAS16
CR964	1900-0224	1	DIODE-SCHOTTKY SM SIG	01542	HSMS-2823
CR965	1900-0216	1	DIODE-SCHOTTKY SM SIG	01542	HSMS2824
CR1001	1900-0331	1	DIODE-PAIR MATCHED	08852	M5X-3763
CR1002	1900-0273	1	DIODE-PIN	01542	HSMP-3892-BLK

Agilent Part Number E4403-60057
3.0 GHz Front End/LO

Reference Designator	Agilent Part Number	Qty	Description	Mgr Code	Mfr Part Number
CR1003	1900-0273	1	DIODE-PIN	01542	HSMP-3892-BLK
DS1	1990-1267	1	LED-LAMP LUM-INT8MCD IF30MA-MAX	14139	AM23ID-F
DS2	1990-1267	1	LED-LAMP LUM-INT8MCD IF30MA-MAX	14139	AM23ID-F
DS3	1990-1267	1	LED-LAMP LUM-INT8MCD IF30MA-MAX	14139	AM23ID-F
E2	9170-1421	1	CORE-SHIELDING BEAD	06352	HF50ACB-322513
E3	9170-1421	1	CORE-SHIELDING BEAD	06352	HF50ACB-322513
E4	9170-1421	1	CORE-SHIELDING BEAD	06352	HF50ACB-322513
E5	9170-1421	1	CORE-SHIELDING BEAD	06352	HF50ACB-322513
E6	9170-1421	1	CORE-SHIELDING BEAD	06352	HF50ACB-322513
E8	9170-1421	1	CORE-SHIELDING BEAD	06352	HF50ACB-322513
E9	9170-1421	1	CORE-SHIELDING BEAD	06352	HF50ACB-322513
E10	9170-1421	1	CORE-SHIELDING BEAD	06352	HF50ACB-322513
E11	9170-1421	1	CORE-SHIELDING BEAD	06352	HF50ACB-322513
E12	9170-1421	1	CORE-SHIELDING BEAD	06352	HF50ACB-322513
E13	9170-1421	1	CORE-SHIELDING BEAD	06352	HF50ACB-322513
E15	9170-1421	1	CORE-SHIELDING BEAD	06352	HF50ACB-322513
E16	9170-1421	1	CORE-SHIELDING BEAD	06352	HF50ACB-322513
E17	9170-1421	1	CORE-SHIELDING BEAD	06352	HF50ACB-322513
E18	9170-1421	1	CORE-SHIELDING BEAD	06352	HF50ACB-322513
E19	9170-1421	1	CORE-SHIELDING BEAD	06352	HF50ACB-322513
E801	9170-1418	1	CORE-SHIELDING BEAD	06352	HF30ACB-453215
E802	9170-1418	1	CORE-SHIELDING BEAD	06352	HF30ACB-453215
E833	9170-1421	1	CORE-SHIELDING BEAD	06352	HF50ACB-322513
E834	9170-1421	1	CORE-SHIELDING BEAD	06352	HF50ACB-322513
E835	9170-1421	1	CORE-SHIELDING BEAD	06352	HF50ACB-322513
E836	9170-1421	1	CORE-SHIELDING BEAD	06352	HF50ACB-322513
E837	9170-1421	1	CORE-SHIELDING BEAD	06352	HF50ACB-322513
E838	9170-1421	1	CORE-SHIELDING BEAD	06352	HF50ACB-322513
E839	9170-1421	1	CORE-SHIELDING BEAD	06352	HF50ACB-322513
E840	9170-1421	1	CORE-SHIELDING BEAD	06352	HF50ACB-322513

 **Indicates factory-selected value*

Agilent Part Number E4403-60057
3.0 GHz Front End/LO

Reference Designator	Agilent Part Number	Qty	Description	Mgr Code	Mfr Part Number
E841	9170-1421	1	CORE-SHIELDING BEAD	06352	HF50ACB-322513
E843	9170-1421	1	CORE-SHIELDING BEAD	06352	HF50ACB-322513
E844	9170-1421	1	CORE-SHIELDING BEAD	06352	HF50ACB-322513
E848	9170-1421	1	CORE-SHIELDING BEAD	06352	HF50ACB-322513
E849	9170-1421	1	CORE-SHIELDING BEAD	06352	HF50ACB-322513
E850	9170-1421	1	CORE-SHIELDING BEAD	06352	HF50ACB-322513
E851	9170-1421	1	CORE-SHIELDING BEAD	06352	HF50ACB-322513
E852	9170-1421	1	CORE-SHIELDING BEAD	06352	HF50ACB-322513
E1000	9170-1421	1	CORE-SHIELDING BEAD	06352	HF50ACB-322513
E1001	9170-1421	1	CORE-SHIELDING BEAD	06352	HF50ACB-322513
E1200	9170-1421	1	CORE-SHIELDING BEAD	06352	HF50ACB-322513
E1201	9170-1421	1	CORE-SHIELDING BEAD	06352	HF50ACB-322513
E1202	9170-1421	1	CORE-SHIELDING BEAD	06352	HF50ACB-322513
E1203	9170-1421	1	CORE-SHIELDING BEAD	06352	HF50ACB-322513
FL1	9135-0461	1	FILTER-SUPPRESSION EMI; SMT; WORKING	09939	NFM61R10T102M 00-621
FL2	9135-0461	1	FILTER-SUPPRESSION EMI; SMT; WORKING	09939	NFM61R10T102M 00-621
FL4	9135-0461	1	FILTER-SUPPRESSION EMI; SMT; WORKING	09939	NFM61R10T102M 00-621
FL5	9135-0461	1	FILTER-SUPPRESSION EMI; SMT; WORKING	09939	NFM61R10T102M 00-621
FL6	9135-0461	1	FILTER-SUPPRESSION EMI; SMT; WORKING	09939	NFM61R10T102M 00-621
FL7	9135-0461	1	FILTER-SUPPRESSION EMI; SMT; WORKING	09939	NFM61R10T102M 00-621
FL8	9135-0461	1	FILTER-SUPPRESSION EMI; SMT; WORKING	09939	NFM61R10T102M 00-621
FL9	9135-0461	1	FILTER-SUPPRESSION EMI; SMT; WORKING	09939	NFM61R10T102M 00-621
FL10	9135-0461	1	FILTER-SUPPRESSION EMI; SMT; WORKING	09939	NFM61R10T102M 00-621
FL11	9135-0461	1	FILTER-SUPPRESSION EMI; SMT; WORKING	09939	NFM61R10T102M 00-621

Agilent Part Number E4403-60057
3.0 GHz Front End/LO

Reference Designator	Agilent Part Number	Qty	Description	Mgr Code	Mfr Part Number
FL12	9135-0461	1	FILTER-SUPPRESSION EMI; SMT; WORKING	09939	NFM61R10T102M 00-621
FL13	9135-0461	1	FILTER-SUPPRESSION EMI; SMT; WORKING	09939	NFM61R10T102M 00-621
FL14	9135-0461	1	FILTER-SUPPRESSION EMI; SMT; WORKING	09939	NFM61R10T102M 00-621
FL50	9135-5352	1	FILTER-EMI 33PF CAPACITANCE; 50VDC; 2A	09939	NFM61R00T330M 00-621
FL51	9135-5352	1	FILTER-EMI 33PF CAPACITANCE; 50VDC; 2A	09939	NFM61R00T330M 00-621
FL52	9135-5352	1	FILTER-EMI 33PF CAPACITANCE; 50VDC; 2A	09939	NFM61R00T330M 00-621
FL53	9135-5352	1	FILTER-EMI 33PF CAPACITANCE; 50VDC; 2A	09939	NFM61R00T330M 00-621
FL54	9135-5352	1	FILTER-EMI 33PF CAPACITANCE; 50VDC; 2A	09939	NFM61R00T330M 00-621
FL55	9135-5352	1	FILTER-EMI 33PF CAPACITANCE; 50VDC; 2A	09939	NFM61R00T330M 00-621
FL56	9135-5352	1	FILTER-EMI 33PF CAPACITANCE; 50VDC; 2A	09939	NFM61R00T330M 00-621
FL57	9135-5352	1	FILTER-EMI 33PF CAPACITANCE; 50VDC; 2A	09939	NFM61R00T330M 00-621
FL58	9135-5352	1	FILTER-EMI 33PF CAPACITANCE; 50VDC; 2A	09939	NFM61R00T330M 00-621
FL59	9135-5352	1	FILTER-EMI 33PF CAPACITANCE; 50VDC; 2A	09939	NFM61R00T330M 00-621
FL60	9135-5352	1	FILTER-EMI 33PF CAPACITANCE; 50VDC; 2A	09939	NFM61R00T330M 00-621
FL61	9135-0461	1	FILTER-SUPPRESSION EMI; SMT; WORKING	09939	NFM61R10T102M 00-621
FL62	9135-0461	1	FILTER-SUPPRESSION EMI; SMT; WORKING	09939	NFM61R10T102M 00-621
FL63	9135-0461	1	FILTER-SUPPRESSION EMI; SMT; WORKING	09939	NFM61R10T102M 00-621
FL64	9135-0461	1	FILTER-SUPPRESSION EMI; SMT; WORKING	09939	NFM61R10T102M 00-621
FL70	9135-5352	1	FILTER-EMI 33PF CAPACITANCE; 50VDC; 2A	09939	NFM61R00T330M 00-621

 **Indicates factory-selected value*

Agilent Part Number E4403-60057
3.0 GHz Front End/LO

Reference Designator	Agilent Part Number	Qty	Description	Mgr Code	Mfr Part Number
FL71	9135-5352	1	FILTER-EMI 33PF CAPACITANCE; 50VDC; 2A	09939	NFM61R00T330M 00-621
FL75	9135-5325	1	FILTER-EMI 100PF CAPACITANCE; 50VDC; 2A	09939	NFM61R00T101M 00-621
FL76	9135-5325	1	FILTER-EMI 100PF CAPACITANCE; 50VDC; 2A	09939	NFM61R00T101M 00-621
FL77	9135-5352	1	FILTER-EMI 33PF CAPACITANCE; 50VDC; 2A	09939	NFM61R00T330M 00-621
FL78	9135-0461	1	FILTER-SUPPRESSION EMI; SMT; WORKING	09939	NFM61R10T102M 00-621
J1	1252-5288	1	CONN-RECT MICRORBN 40-CKT 40-CONT	01380	557100-5
J2	1250-2596	1	CONNECTOR-RF SMA FEMALE 50-OHM	04670	142-0711-851
J3	1250-2596	1	CONNECTOR-RF SMA FEMALE 50-OHM	04670	142-0711-851
J4	1250-2788	1	CONNECTOR-RF SMB MALE 50-OHM	05879	903-545J-51P
J5	1250-2596	1	CONNECTOR-RF SMA FEMALE 50-OHM	04670	142-0711-851
J6	1250-2787	1	CONNECTOR-RF MMCX MALE PC-W/O-STDF	06860	85 MMCX-50-0-1/ 111OE
J7	1250-2787	1	CONNECTOR-RF MMCX MALE PC-W/O-STDF	06860	85 MMCX-50-0-1/ 111OE
J8	1250-2787	1	CONNECTOR-RF MMCX MALE PC-W/O-STDF	06860	85 MMCX-50-0-1/ 111OE
L2	9140-1113	1	INDUCTOR 10uH +-5% 3.4W-mmX4.8LG-mm Q50	28480	9140-1113
L3	9140-1113	1	INDUCTOR 10uH +-5% 3.4W-mmX4.8LG-mm Q50	28480	9140-1113
L38	9140-1736	1	INDUCTOR 47uH +20% -20% 7.3W-mmX7.3LG-mm	06353	E636CY-470M-P3
L39	9140-1736	1	INDUCTOR 47uH +20% -20% 7.3W-mmX7.3LG-mm	06353	E636CY-470M-P3
L40	9140-1736	1	INDUCTOR 47uH +20% -20% 7.3W-mmX7.3LG-mm	06353	E636CY-470M-P3
L41	9140-1736	1	INDUCTOR 47uH +20% -20% 7.3W-mmX7.3LG-mm	06353	E636CY-470M-P3
L42	9140-1736	1	INDUCTOR 47uH +20% -20% 7.3W-mmX7.3LG-mm	06353	E636CY-470M-P3
L43	9140-1736	1	INDUCTOR 47uH +20% -20% 7.3W-mmX7.3LG-mm	06353	E636CY-470M-P3
L44	9140-1110	1	INDUCTOR 5.6uH +-5% 3.4W-mmX4.8LG-mm	28480	9140-1110
L45	9140-1110	1	INDUCTOR 5.6uH +-5% 3.4W-mmX4.8LG-mm	28480	9140-1110
L46	9140-1110	1	INDUCTOR 5.6uH +-5% 3.4W-mmX4.8LG-mm	28480	9140-1110
L47	9140-1110	1	INDUCTOR 5.6uH +-5% 3.4W-mmX4.8LG-mm	28480	9140-1110

Agilent Part Number E4403-60057
3.0 GHz Front End/LO

Reference Designator	Agilent Part Number	Qty	Description	Mgr Code	Mfr Part Number
L48	9140-1110	1	INDUCTOR 5.6uH +-5% 3.4W-mmX4.8LG-mm	28480	9140-1110
L49	9140-1110	1	INDUCTOR 5.6uH +-5% 3.4W-mmX4.8LG-mm	28480	9140-1110
L50	9140-1110	1	INDUCTOR 5.6uH +-5% 3.4W-mmX4.8LG-mm	28480	9140-1110
L51	9140-1110	1	INDUCTOR 5.6uH +-5% 3.4W-mmX4.8LG-mm	28480	9140-1110
L53	9140-1110	1	INDUCTOR 5.6uH +-5% 3.4W-mmX4.8LG-mm	28480	9140-1110
L54	9140-1110	1	INDUCTOR 5.6uH +-5% 3.4W-mmX4.8LG-mm	28480	9140-1110
L55	9140-1110	1	INDUCTOR 5.6uH +-5% 3.4W-mmX4.8LG-mm	28480	9140-1110
L59	9140-1110	1	INDUCTOR 5.6uH +-5% 3.4W-mmX4.8LG-mm	28480	9140-1110
L60	9140-1110	1	INDUCTOR 5.6uH +-5% 3.4W-mmX4.8LG-mm	28480	9140-1110
L61	9140-1736	1	INDUCTOR 47uH +20% -20% 7.3W-mmX7.3LG-mm	06353	E636CY-470M-P3
L101	9140-1110	1	INDUCTOR 5.6uH +-5% 3.4W-mmX4.8LG-mm	28480	9140-1110
L300	9140-1945	1	INDUCTOR 8.2nH +5% -5% 1.27W-mmX2.2LG-mm	06353	LL2012-F8N2J
L301	9140-2082	1	INDUCTOR 2.2nH 1.45W-mmX2.2LG-mm Q13	06353	LL2012-F2N2S
L302	9140-1106	1	INDUCTOR 1.5uH +-5% 3.4W-mmX4.8LG-mm	28480	9140-1106
L303	9140-1106	1	INDUCTOR 1.5uH +-5% 3.4W-mmX4.8LG-mm	28480	9140-1106
MC1	0955-1039	1	U-WAVE YIG OSCILLATOR 7.1 GHZ MAX	11559	0955-1039
MP2	E4403-20038	1	PLATE-MNTNG	28480	E4403-20038
MP3	E4403-20003	1	GASKET-YIG OSC	28480	E4403-20003
MP4	0515-0658	1	SCREW-MACHINE ASSEMBLY M2 X 0.4 6MM-LG	05610	0515-0658
MP5	0515-0658	1	SCREW-MACHINE ASSEMBLY M2 X 0.4 6MM-LG	05610	0515-0658
MP6	0515-0658	1	SCREW-MACHINE ASSEMBLY M2 X 0.4 6MM-LG	05610	0515-0658
Q55	1853-0567	1	TRANSISTOR PNP SI SOT-23 (TO-236AB)	00746	SST3906T116
Q56	1854-1037	1	TRANSISTOR NPN SI TO-236AA PD350MW	00746	SST3904T116
Q57	1854-1148	1	TRANSISTOR NPN SI SOT-23 (TO-236AB)	02237	MMBTH10
Q59	1855-0897	1	TRANSISTOR MOSFET N-CHAN E-MODE SI	02237	9K45
Q60	1853-0580	1	TRANSISTOR PNP SI SOT-23 (TO-236AB)	00746	SST4403
Q61	1854-1188	1	TRANSISTOR NPN SI SOT-23 (TO-236AB)	11699	CMPT4401
Q70	1855-0901	1	TRANSISTOR-MOSFET DUAL N-&P-CHAN E-MODE	02910	PHC21025

 **Indicates factory-selected value*

Agilent Part Number E4403-60057
3.0 GHz Front End/LO

Reference Designator	Agilent Part Number	Qty	Description	Mgr Code	Mfr Part Number
Q71	1855-0908	1	TRANSISTOR MOSFET N-CHAN E-MODE SOT-223	36393	BSP295
Q700	1855-1096	1	TRANSISTOR GAAS FET N-CHAN D-MODE	28480	1855-1096
Q701	1855-1096	1	TRANSISTOR GAAS FET N-CHAN D-MODE	28480	1855-1096
Q702	1855-1096	1	TRANSISTOR GAAS FET N-CHAN D-MODE	28480	1855-1096
Q703	E4403-50003	1		28480	E4403-50003
Q704	1855-1096	1	TRANSISTOR GAAS FET N-CHAN D-MODE	28480	1855-1096
Q705	E4403-50003	1		28480	E4403-50003
Q801	E4403-50003	1		28480	E4403-50003
Q805	1854-1270	1	TRANSISTOR NPN SI TO-261AA (SOT-223)	02910	PZT2222A
Q806	1853-0567	1	TRANSISTOR PNP SI SOT-23 (TO-236AB)	00746	SST3906T116
Q807	1854-1014	1	TRANSISTOR NPN SI TO-236AA PD350MW	36633	MMBT6429LT1
Q808	1854-1014	1	TRANSISTOR NPN SI TO-236AA PD350MW	36633	MMBT6429LT1
Q809	1854-1014	1	TRANSISTOR NPN SI TO-236AA PD350MW	36633	MMBT6429LT1
Q810	1854-1014	1	TRANSISTOR NPN SI TO-236AA PD350MW	36633	MMBT6429LT1
Q811	1854-1014	1	TRANSISTOR NPN SI TO-236AA PD350MW	36633	MMBT6429LT1
Q812	1854-1037	1	TRANSISTOR NPN SI TO-236AA PD350MW	00746	SST3904T116
Q813	1854-1037	1	TRANSISTOR NPN SI TO-236AA PD350MW	00746	SST3904T116
Q814	1853-0567	1	TRANSISTOR PNP SI SOT-23 (TO-236AB)	00746	SST3906T116
Q816	1853-0580	1	TRANSISTOR PNP SI SOT-23 (TO-236AB)	00746	SST4403
Q817	1854-1037	1	TRANSISTOR NPN SI TO-236AA PD350MW	00746	SST3904T116
Q818	1854-1270	1	TRANSISTOR NPN SI TO-261AA (SOT-223)	02910	PZT2222A
Q819	1854-1270	1	TRANSISTOR NPN SI TO-261AA (SOT-223)	02910	PZT2222A
Q820	1853-0567	1	TRANSISTOR PNP SI SOT-23 (TO-236AB)	00746	SST3906T116
Q821	1855-0800	1	TRANSISTOR MOSFET N-CHAN E-MODE TO-252AA	36633	MTD3055VL
Q900	1853-0567	1	TRANSISTOR PNP SI SOT-23 (TO-236AB)	00746	SST3906T116
Q2001	1854-1055	1	TRANSISTOR NPN SI SOT-23 (TO-236AB)	02910	BFR93
R2	0699-2064	1	RESISTOR 6.8 +-5% .125W TKF TC0+-500	00746	MCR18-J-6R8

Agilent Part Number E4403-60057
3.0 GHz Front End/LO

Reference Designator	Agilent Part Number	Qty	Description	Mgr Code	Mfr Part Number
Q71	1855-0908	1	TRANSISTOR MOSFET N-CHAN E-MODE SOT-223	36393	BSP295
Q700	1855-1096	1	TRANSISTOR GAAS FET N-CHAN D-MODE	28480	1855-1096
Q701	1855-1096	1	TRANSISTOR GAAS FET N-CHAN D-MODE	28480	1855-1096
Q702	1855-1096	1	TRANSISTOR GAAS FET N-CHAN D-MODE	28480	1855-1096
Q703	E4403-50003	1		28480	E4403-50003
Q704	1855-1096	1	TRANSISTOR GAAS FET N-CHAN D-MODE	28480	1855-1096
Q705	E4403-50003	1		28480	E4403-50003
Q801	E4403-50003	1		28480	E4403-50003
Q805	1854-1270	1	TRANSISTOR NPN SI TO-261AA (SOT-223)	02910	PZT2222A
Q806	1853-0567	1	TRANSISTOR PNP SI SOT-23 (TO-236AB)	00746	SST3906T116
Q807	1854-1014	1	TRANSISTOR NPN SI TO-236AA PD350MW	36633	MMBT6429LT1
Q808	1854-1014	1	TRANSISTOR NPN SI TO-236AA PD350MW	36633	MMBT6429LT1
Q809	1854-1014	1	TRANSISTOR NPN SI TO-236AA PD350MW	36633	MMBT6429LT1
Q810	1854-1014	1	TRANSISTOR NPN SI TO-236AA PD350MW	36633	MMBT6429LT1
Q811	1854-1014	1	TRANSISTOR NPN SI TO-236AA PD350MW	36633	MMBT6429LT1
Q812	1854-1037	1	TRANSISTOR NPN SI TO-236AA PD350MW	00746	SST3904T116
Q813	1854-1037	1	TRANSISTOR NPN SI TO-236AA PD350MW	00746	SST3904T116
Q814	1853-0567	1	TRANSISTOR PNP SI SOT-23 (TO-236AB)	00746	SST3906T116
Q816	1853-0580	1	TRANSISTOR PNP SI SOT-23 (TO-236AB)	00746	SST4403
Q817	1854-1037	1	TRANSISTOR NPN SI TO-236AA PD350MW	00746	SST3904T116
Q818	1854-1270	1	TRANSISTOR NPN SI TO-261AA (SOT-223)	02910	PZT2222A
Q819	1854-1270	1	TRANSISTOR NPN SI TO-261AA (SOT-223)	02910	PZT2222A
Q820	1853-0567	1	TRANSISTOR PNP SI SOT-23 (TO-236AB)	00746	SST3906T116
Q821	1855-0800	1	TRANSISTOR MOSFET N-CHAN E-MODE TO-252AA	36633	MTD3055VL
Q900	1853-0567	1	TRANSISTOR PNP SI SOT-23 (TO-236AB)	00746	SST3906T116
Q2001	1854-1055	1	TRANSISTOR NPN SI SOT-23 (TO-236AB)	02910	BFR93
R2	0699-2064	1	RESISTOR 6.8 +-5% .125W TKF TC0+-500	00746	MCR18-J-6R8

Agilent Part Number E4403-60057
3.0 GHz Front End/LO

Reference Designator	Agilent Part Number	Qty	Description	Mgr Code	Mfr Part Number
R3	0699-2776	1	RESISTOR 1 +-10% .125W TKF TC0+-500	00746	MCR18-K-010
R200	0699-3970	1	RESISTOR 10K +-1% .063W TKF TC0+-200	09891	RK73H1J1002F
R201	0699-3970	1	RESISTOR 10K +-1% .063W TKF TC0+-200	09891	RK73H1J1002F
R202	0699-3970	1	RESISTOR 10K +-1% .063W TKF TC0+-200	09891	RK73H1J1002F
R203	0699-3970	1	RESISTOR 10K +-1% .063W TKF TC0+-200	09891	RK73H1J1002F
R204	0699-3970	1	RESISTOR 10K +-1% .063W TKF TC0+-200	09891	RK73H1J1002F
R205	0699-3970	1	RESISTOR 10K +-1% .063W TKF TC0+-200	09891	RK73H1J1002F
R206	0699-3970	1	RESISTOR 10K +-1% .063W TKF TC0+-200	09891	RK73H1J1002F
R207	0699-3970	1	RESISTOR 10K +-1% .063W TKF TC0+-200	09891	RK73H1J1002F
R210	0699-3947	1	RESISTOR 1K +-1% .063W TKF TC0+-200	00746	MCR03-F-1001
R212	0699-4361	1	RESISTOR 1 +-5% .063W TKF TC0+-500	09891	RM73B1J1ROJ
R213	0699-2833	1	RESISTOR 300 +-0.1% .125W TF TC0+-25	01172	BLU-1206 300R .1% 25PPM
R214	0699-2833	1	RESISTOR 300 +-0.1% .125W TF TC0+-25	01172	BLU-1206 300R .1% 25PPM
R215	0699-2832	1	RESISTOR 200 +-0.1% .125W TF TC0+-25	02499	W1206R032000BT
R216	0699-2832	1	RESISTOR 200 +-0.1% .125W TF TC0+-25	02499	W1206R032000BT
R217	0699-2832	1	RESISTOR 200 +-0.1% .125W TF TC0+-25	02499	W1206R032000BT
R218	0699-2490	1	RESISTOR 1K +-0.1% .125W TF TC0+-25	01172	BLU-1206 1K .1% 25PPM
R219	0699-2838	1	RESISTOR 40K +-0.1% .125W TF TC0+-25	01172	BLU-1206 40K .1% 25PPM
R367	0699-3970	1	RESISTOR 10K +-1% .063W TKF TC0+-200	09891	RK73H1J1002F
R368	0699-3970	1	RESISTOR 10K +-1% .063W TKF TC0+-200	09891	RK73H1J1002F
R369	0699-3959	1	RESISTOR 3.16K +-1% .063W TKF TC0+-200	00746	MCR03-F-3161
R370	0699-3964	1	RESISTOR 5.11K +-1% .063W TKF TC0+-200	09891	RK73H1J5111F
R371	0699-3955	1	RESISTOR 2.15K +-1% .063W TKF TC0+-200	09891	RK73H1J2151F
R372	0699-3947	1	RESISTOR 1K +-1% .063W TKF TC0+-200	00746	MCR03-F-1001
R373	0699-3918	1	RESISTOR 51.1 +-1% .063W TKF TC0+-200	00746	MCR03-F-51R1
R374	0699-3941	1	RESISTOR 511 +-1% .063W TKF TC0+-200	00746	MCR03-F-5110
R375	0699-3970	1	RESISTOR 10K +-1% .063W TKF TC0+-200	09891	RK73H1J1002F

 **Indicates factory-selected value*

Agilent Part Number E4403-60057
3.0 GHz Front End/LO

Reference Designator	Agilent Part Number	Qty	Description	Mgr Code	Mfr Part Number
R376	0699-2829	1	RESISTOR 50 +-0.1% .125W TF TC0+-25	02499	W1206R030500BT
R377	0699-2840	1	RESISTOR 2.5K +-0.1% .125W TF TC0+-25	02499	W1206R032501BT
R378	0699-2840	1	RESISTOR 2.5K +-0.1% .125W TF TC0+-25	02499	W1206R032501BT
R379	0699-2829	1	RESISTOR 50 +-0.1% .125W TF TC0+-25	02499	W1206R030500BT
R380	0699-2828	1	RESISTOR 1.5K +-0.1% .125W TF TC0+-25	01172	BLU-1206 1K5 .1% 25PPM
R381	0699-2487	1	RESISTOR 90K +-0.1% .125W TF TC0+-25	01172	BLU-1206 90K .1% 25PPM
R382	0699-2836	1	RESISTOR 15K +-0.1% .125W TF TC0+-25	01172	BLU-1206 15K .1% 25PPM
R384	0699-1427	1	RESISTOR 316 +-1% .125W TKF TC0+-100	09891	RK73H2BT3160F
R387	0699-2836	1	RESISTOR 15K +-0.1% .125W TF TC0+-25	01172	BLU-1206 15K .1% 25PPM
R388	0699-3984	1	RESISTOR 38.3K +-1% .063W TKF TC0+-200	09891	RK73H1J3832F
R389	0699-3984	1	RESISTOR 38.3K +-1% .063W TKF TC0+-200	09891	RK73H1J3832F
R390	0699-3976	1	RESISTOR 17.8K +-1% .063W TKF TC0+-200	09891	RK73H1J1782F
R391	0699-3976	1	RESISTOR 17.8K +-1% .063W TKF TC0+-200	09891	RK73H1J1782F
R396	0699-3932	1	RESISTOR 215 +-1% .063W TKF TC0+-200	00746	MCR03-F-2150
R399	0699-3942	1	RESISTOR 619 +-1% .063W TKF TC0+-200	00746	MCR03-F-6190
R404	0699-2826	1	RESISTOR 3K +-0.1% .125W TF TC0+-25	02499	W1206R033001BT
R406	0699-1391	1	RESISTOR 10K +-1% .125W TKF TC0+-100	05524	CRCW12061002F
R407	0699-2826	1	RESISTOR 3K +-0.1% .125W TF TC0+-25	02499	W1206R033001BT
R409	0699-3993	1	RESISTOR 100K +-1% .063W TKF TC0+-200	09891	RK73H1J1003F
R410	0699-3944	1	RESISTOR 750 +-1% .063W TKF TC0+-200	09891	RK73H1J7500F
R411	0699-3924	1	RESISTOR 100 +-1% .063W TKF TC0+-200	00746	MCR03-F-1000
R412	0699-3924	1	RESISTOR 100 +-1% .063W TKF TC0+-200	00746	MCR03-F-1000
R413	0699-3951	1	RESISTOR 1.47K +-1% .063W TKF TC0+-200	00746	MCR03-F-1471
R414	0699-3951	1	RESISTOR 1.47K +-1% .063W TKF TC0+-200	00746	MCR03-F-1471
R415	0699-3913	1	RESISTOR 31.6 +-1% .063W TKF TC0+-200	09891	RK73H1J31R6F
R417	0699-3910	1	RESISTOR 23.7 +-1% .063W TKF TC0+-200	09891	RK73H1J23R7F
R420	0699-2836	1	RESISTOR 15K +-0.1% .125W TF TC0+-25	01172	BLU-1206 15K .1% 25PPM

Agilent Part Number E4403-60057
3.0 GHz Front End/LO

Reference Designator	Agilent Part Number	Qty	Description	Mgr Code	Mfr Part Number
R421	0699-3935	1	RESISTOR 287 +-1% .063W TKF TC0+-200	00746	MCR03-F-2870
R422	0699-3935	1	RESISTOR 287 +-1% .063W TKF TC0+-200	00746	MCR03-F-2870
R423	0699-3935	1	RESISTOR 287 +-1% .063W TKF TC0+-200	00746	MCR03-F-2870
R424	0699-3935	1	RESISTOR 287 +-1% .063W TKF TC0+-200	00746	MCR03-F-2870
R425	0699-3935	1	RESISTOR 287 +-1% .063W TKF TC0+-200	00746	MCR03-F-2870
R426	0699-3935	1	RESISTOR 287 +-1% .063W TKF TC0+-200	00746	MCR03-F-2870
R428	0699-3907	1	RESISTOR 17.8 +-1% .063W TKF TC0+-200	09891	RK73H1J17R8F
R429	0699-3907	1	RESISTOR 17.8 +-1% .063W TKF TC0+-200	09891	RK73H1J17R8F
R430	0699-3907	1	RESISTOR 17.8 +-1% .063W TKF TC0+-200	09891	RK73H1J17R8F
R431	0699-3574	1	RESISTOR 0 .0625W TKF	09891	RM73Z1JT
R432	0699-2442	1	RESISTOR 2.2 +-5% .125W TKF TC0+-200	09891	RM73B2BT2R2J
R437	0699-3932	1	RESISTOR 215 +-1% .063W TKF TC0+-200	00746	MCR03-F-2150
R440	0699-3932	1	RESISTOR 215 +-1% .063W TKF TC0+-200	00746	MCR03-F-2150
R441	0699-3924	1	RESISTOR 100 +-1% .063W TKF TC0+-200	00746	MCR03-F-1000
R442	0699-2833	1	RESISTOR 300 +-0.1% .125W TF TC0+-25	01172	BLU-1206 300R .1% 25PPM
R443	0699-3924	1	RESISTOR 100 +-1% .063W TKF TC0+-200	00746	MCR03-F-1000
R444	0699-2835	1	RESISTOR 500 +-0.1% .125W TF TC0+-25	02499	W1206R035000BT
R446	0699-2823	1	RESISTOR 8K +-0.1% .125W TF TC0+-25	02499	W1206R038001BT
R447	0699-1378	1	RESISTOR 2.61K +-1% .125W TKF TC0+-100	09891	RK73H2BT2611F
R448	0699-3966	1	RESISTOR 6.81K +-1% .063W TKF TC0+-200	09891	RK73H1J6811F
R449	0699-2483	1	RESISTOR 4K +-0.1% .125W TF TC0+-25	02499	W1206R034001BT
R450	0699-2483	1	RESISTOR 4K +-0.1% .125W TF TC0+-25	02499	W1206R034001BT
R451	0699-2828	1	RESISTOR 1.5K +-0.1% .125W TF TC0+-25	01172	BLU-1206 1K5 .1% 25PPM
R452	0699-2490	1	RESISTOR 1K +-0.1% .125W TF TC0+-25	01172	BLU-1206 1K .1% 25PPM
R453	0699-3991	1	RESISTOR 82.5K +-1% .063W TKF TC0+-200	09891	RK73H1J8252F
R454	0699-2828	1	RESISTOR 1.5K +-0.1% .125W TF TC0+-25	01172	BLU-1206 1K5 .1% 25PPM
R455	0699-1318	1	RESISTOR 1K +-1% .125W TKF TC0+-100	00746	MCR18-F-1001

 **Indicates factory-selected value*

Agilent Part Number E4403-60057
3.0 GHz Front End/LO

Reference Designator	Agilent Part Number	Qty	Description	Mgr Code	Mfr Part Number
R456	0699-3942	1	RESISTOR 619 +-1% .063W TKF TC0+-200	00746	MCR03-F-6190
R458	0699-3901	1	RESISTOR 10 +-1% .063W TKF TC0+-200	00746	MCR03-F-10R0
R459	0699-3901	1	RESISTOR 10 +-1% .063W TKF TC0+-200	00746	MCR03-F-10R0
R465	0699-3918	1	RESISTOR 51.1 +-1% .063W TKF TC0+-200	00746	MCR03-F-51R1
R466	0699-3918	1	RESISTOR 51.1 +-1% .063W TKF TC0+-200	00746	MCR03-F-51R1
R474	0699-3970	1	RESISTOR 10K +-1% .063W TKF TC0+-200	09891	RK73H1J1002F
R475	0699-3970	1	RESISTOR 10K +-1% .063W TKF TC0+-200	09891	RK73H1J1002F
R476	0699-3970	1	RESISTOR 10K +-1% .063W TKF TC0+-200	09891	RK73H1J1002F
R477	0699-3970	1	RESISTOR 10K +-1% .063W TKF TC0+-200	09891	RK73H1J1002F
R478	0699-3970	1	RESISTOR 10K +-1% .063W TKF TC0+-200	09891	RK73H1J1002F
R479	0699-3970	1	RESISTOR 10K +-1% .063W TKF TC0+-200	09891	RK73H1J1002F
R485	0699-3955	1	RESISTOR 2.15K +-1% .063W TKF TC0+-200	09891	RK73H1J2151F
R487	0699-2489	1	RESISTOR 10K +-0.1% .125W TF TC0+-25	01172	BLU-1206 10K .1% 25PPM
R488	0699-3970	1	RESISTOR 10K +-1% .063W TKF TC0+-200	09891	RK73H1J1002F
R489	0699-2489	1	RESISTOR 10K +-0.1% .125W TF TC0+-25	01172	BLU-1206 10K .1% 25PPM
R491	0699-2847	1	RESISTOR 2K +-0.1% .125W TF TC0+-25	01172	BLU-1206 2K .1% 25PPM
R492	0699-2847	1	RESISTOR 2K +-0.1% .125W TF TC0+-25	01172	BLU-1206 2K .1% 25PPM
R493	0699-2847	1	RESISTOR 2K +-0.1% .125W TF TC0+-25	01172	BLU-1206 2K .1% 25PPM
R497	0699-3970	1	RESISTOR 10K +-1% .063W TKF TC0+-200	09891	RK73H1J1002F
R498	0699-3970	1	RESISTOR 10K +-1% .063W TKF TC0+-200	09891	RK73H1J1002F
R499	0699-3970	1	RESISTOR 10K +-1% .063W TKF TC0+-200	09891	RK73H1J1002F
R500	0699-3970	1	RESISTOR 10K +-1% .063W TKF TC0+-200	09891	RK73H1J1002F
R501	0699-2490	1	RESISTOR 1K +-0.1% .125W TF TC0+-25	01172	BLU-1206 1K .1% 25PPM
R502	0699-2847	1	RESISTOR 2K +-0.1% .125W TF TC0+-25	01172	BLU-1206 2K .1% 25PPM
R505	0699-2840	1	RESISTOR 2.5K +-0.1% .125W TF TC0+-25	02499	W1206R032501BT

Agilent Part Number E4403-60057
3.0 GHz Front End/LO

Reference Designator	Agilent Part Number	Qty	Description	Mgr Code	Mfr Part Number
R506	0699-2840	1	RESISTOR 2.5K +-0.1% .125W TF TC0+-25	02499	W1206R032501BT
R509	0699-3908	1	RESISTOR 19.6 +-1% .063W TKF TC0+-200	09891	RK73H1J19R6F
R510	0699-3908	1	RESISTOR 19.6 +-1% .063W TKF TC0+-200	09891	RK73H1J19R6F
R511	0699-3908	1	RESISTOR 19.6 +-1% .063W TKF TC0+-200	09891	RK73H1J19R6F
R512	0699-3908	1	RESISTOR 19.6 +-1% .063W TKF TC0+-200	09891	RK73H1J19R6F
R513	0699-3908	1	RESISTOR 19.6 +-1% .063W TKF TC0+-200	09891	RK73H1J19R6F
R514	0699-3908	1	RESISTOR 19.6 +-1% .063W TKF TC0+-200	09891	RK73H1J19R6F
R515	0699-3908	1	RESISTOR 19.6 +-1% .063W TKF TC0+-200	09891	RK73H1J19R6F
R516	0699-3908	1	RESISTOR 19.6 +-1% .063W TKF TC0+-200	09891	RK73H1J19R6F
R517	0699-3908	1	RESISTOR 19.6 +-1% .063W TKF TC0+-200	09891	RK73H1J19R6F
R518	0699-3908	1	RESISTOR 19.6 +-1% .063W TKF TC0+-200	09891	RK73H1J19R6F
R519	0699-3908	1	RESISTOR 19.6 +-1% .063W TKF TC0+-200	09891	RK73H1J19R6F
R520	0699-3908	1	RESISTOR 19.6 +-1% .063W TKF TC0+-200	09891	RK73H1J19R6F
R521	0699-3908	1	RESISTOR 19.6 +-1% .063W TKF TC0+-200	09891	RK73H1J19R6F
R522	0699-3908	1	RESISTOR 19.6 +-1% .063W TKF TC0+-200	09891	RK73H1J19R6F
R524	0699-2838	1	RESISTOR 40K +-0.1% .125W TF TC0+-25	01172	BLU-1206 40K .1% 25PPM
R525	0699-3924	1	RESISTOR 100 +-1% .063W TKF TC0+-200	00746	MCR03-F-1000
R528	0699-2840	1	RESISTOR 2.5K +-0.1% .125W TF TC0+-25	02499	W1206R032501BT
R529	0699-2847	1	RESISTOR 2K +-0.1% .125W TF TC0+-25	01172	BLU-1206 2K .1% 25PPM
R530	0699-3941	1	RESISTOR 511 +-1% .063W TKF TC0+-200	00746	MCR03-F-5110
R535	0699-3924	1	RESISTOR 100 +-1% .063W TKF TC0+-200	00746	MCR03-F-1000
R536	0699-3947	1	RESISTOR 1K +-1% .063W TKF TC0+-200	00746	MCR03-F-1001
R537	0699-3947	1	RESISTOR 1K +-1% .063W TKF TC0+-200	00746	MCR03-F-1001
R542	0699-4699	1	RESISTOR 20 +-1% 16W TKF TC0+-50	07139	MP816-20.0-1.0%
R551	0699-3950	1	RESISTOR 1.33K +-1% .063W TKF TC0+-200	09891	RK73H1J1331F
R552	0699-3950	1	RESISTOR 1.33K +-1% .063W TKF TC0+-200	09891	RK73H1J1331F
R553	0699-3942	1	RESISTOR 619 +-1% .063W TKF TC0+-200	00746	MCR03-F-6190
R554	0699-3942	1	RESISTOR 619 +-1% .063W TKF TC0+-200	00746	MCR03-F-6190

 **Indicates factory-selected value*

Agilent Part Number E4403-60057
3.0 GHz Front End/LO

Reference Designator	Agilent Part Number	Qty	Description	Mgr Code	Mfr Part Number
R555	0699-3904	1	RESISTOR 13.3 +-1% .063W TKF TC0+-200	00746	MCR03-F-13R3
R556	0699-3904	1	RESISTOR 13.3 +-1% .063W TKF TC0+-200	00746	MCR03-F-13R3
R557	0699-3920	1	RESISTOR 68.1 +-1% .063W TKF TC0+-200	09891	RK73H1J68R1F
R558	0699-3920	1	RESISTOR 68.1 +-1% .063W TKF TC0+-200	09891	RK73H1J68R1F
R559	0699-3365	1	RESISTOR 56.2 +-1% .065W TKF TC0+-200	09891	RK73H1J56R2F
R560	0699-3365	1	RESISTOR 56.2 +-1% .065W TKF TC0+-200	09891	RK73H1J56R2F
R563	0699-3934	1	RESISTOR 261 +-1% .063W TKF TC0+-200	09891	RK73H1J2610F
R564	0699-3934	1	RESISTOR 261 +-1% .063W TKF TC0+-200	09891	RK73H1J2610F
R565	0699-3942	1	RESISTOR 619 +-1% .063W TKF TC0+-200	00746	MCR03-F-6190
R566	0699-3942	1	RESISTOR 619 +-1% .063W TKF TC0+-200	00746	MCR03-F-6190
R567	0699-3942	1	RESISTOR 619 +-1% .063W TKF TC0+-200	00746	MCR03-F-6190
R568	0699-3942	1	RESISTOR 619 +-1% .063W TKF TC0+-200	00746	MCR03-F-6190
R571	0699-3926	1	RESISTOR 121 +-1% .063W TKF TC0+-200	00746	MCR03-F-1210
R572	0699-3926	1	RESISTOR 121 +-1% .063W TKF TC0+-200	00746	MCR03-F-1210
R573	0699-3955	1	RESISTOR 2.15K +-1% .063W TKF TC0+-200	09891	RK73H1J2151F
R574	0699-3955	1	RESISTOR 2.15K +-1% .063W TKF TC0+-200	09891	RK73H1J2151F
R575	0699-3959	1	RESISTOR 3.16K +-1% .063W TKF TC0+-200	00746	MCR03-F-3161
R576	0699-3959	1	RESISTOR 3.16K +-1% .063W TKF TC0+-200	00746	MCR03-F-3161
R577	0699-3941	1	RESISTOR 511 +-1% .063W TKF TC0+-200	00746	MCR03-F-5110
R578	0699-3941	1	RESISTOR 511 +-1% .063W TKF TC0+-200	00746	MCR03-F-5110
R579	0699-3921	1	RESISTOR 75 +-1% .063W TKF TC0+-200	00746	MCR03-F-75R0
R580	0699-3921	1	RESISTOR 75 +-1% .063W TKF TC0+-200	00746	MCR03-F-75R0
R581	0699-3918	1	RESISTOR 51.1 +-1% .063W TKF TC0+-200	00746	MCR03-F-51R1
R582	0699-3918	1	RESISTOR 51.1 +-1% .063W TKF TC0+-200	00746	MCR03-F-51R1
R583	0699-3921	1	RESISTOR 75 +-1% .063W TKF TC0+-200	00746	MCR03-F-75R0
R584	0699-3921	1	RESISTOR 75 +-1% .063W TKF TC0+-200	00746	MCR03-F-75R0
R585	0699-3960	1	RESISTOR 3.48K +-1% .063W TKF TC0+-200	09891	RK73H1J3481F
R586	0699-3960	1	RESISTOR 3.48K +-1% .063W TKF TC0+-200	09891	RK73H1J3481F
R587	0699-3924	1	RESISTOR 100 +-1% .063W TKF TC0+-200	00746	MCR03-F-1000
R588	0699-3924	1	RESISTOR 100 +-1% .063W TKF TC0+-200	00746	MCR03-F-1000

Agilent Part Number E4403-60057
3.0 GHz Front End/LO

Reference Designator	Agilent Part Number	Qty	Description	Mgr Code	Mfr Part Number
R589	0699-3924	1	RESISTOR 100 +-1% .063W TKF TC0+-200	00746	MCR03-F-1000
R590	0699-3918	1	RESISTOR 51.1 +-1% .063W TKF TC0+-200	00746	MCR03-F-51R1
R591	0699-3918	1	RESISTOR 51.1 +-1% .063W TKF TC0+-200	00746	MCR03-F-51R1
R592	0699-3901	1	RESISTOR 10 +-1% .063W TKF TC0+-200	00746	MCR03-F-10R0
R593	0699-3901	1	RESISTOR 10 +-1% .063W TKF TC0+-200	00746	MCR03-F-10R0
R594	0699-3924	1	RESISTOR 100 +-1% .063W TKF TC0+-200	00746	MCR03-F-1000
R595	0699-3924	1	RESISTOR 100 +-1% .063W TKF TC0+-200	00746	MCR03-F-1000
R596	0699-3924	1	RESISTOR 100 +-1% .063W TKF TC0+-200	00746	MCR03-F-1000
R597	0699-3966	1	RESISTOR 6.81K +-1% .063W TKF TC0+-200	09891	RK73H1J6811F
R598	0699-3966	1	RESISTOR 6.81K +-1% .063W TKF TC0+-200	09891	RK73H1J6811F
R599	0699-3918	1	RESISTOR 51.1 +-1% .063W TKF TC0+-200	00746	MCR03-F-51R1
R600	0699-3918	1	RESISTOR 51.1 +-1% .063W TKF TC0+-200	00746	MCR03-F-51R1
R601	0699-3914	1	RESISTOR 34.8 +-1% .063W TKF TC0+-200	00746	MCR03-F-34R8
R602	0699-3914	1	RESISTOR 34.8 +-1% .063W TKF TC0+-200	00746	MCR03-F-34R8
R605	0699-3365	1	RESISTOR 56.2 +-1% .065W TKF TC0+-200	09891	RK73H1J56R2F
R606	0699-3365	1	RESISTOR 56.2 +-1% .065W TKF TC0+-200	09891	RK73H1J56R2F
R612	0699-3977	1	RESISTOR 19.6K +-1% .063W TKF TC0+-200	09891	RK73H1J1962F
R613	0699-3977	1	RESISTOR 19.6K +-1% .063W TKF TC0+-200	09891	RK73H1J1962F
R620	0699-1327	1	RESISTOR 1M +-1% .125W TKF TC0+-100	09891	RK73H2BT1004F
R621	0699-1327	1	RESISTOR 1M +-1% .125W TKF TC0+-100	09891	RK73H2BT1004F
R622	0699-3964	1	RESISTOR 5.11K +-1% .063W TKF TC0+-200	09891	RK73H1J5111F
R804	0699-3961	1	RESISTOR 3.83K +-1% .063W TKF TC0+-200	09891	RK73H1J3831F
R806	0699-3950	1	RESISTOR 1.33K +-1% .063W TKF TC0+-200	09891	RK73H1J1331F
R812	0699-3906	1	RESISTOR 16.2 +-1% .063W TKF TC0+-200	09891	RK73H1J16R2F
R813	0699-3944	1	RESISTOR 750 +-1% .063W TKF TC0+-200	09891	RK73H1J7500F
R814	0699-3919	1	RESISTOR 61.9 +-1% .063W TKF TC0+-200	05524	CRCW060361R9F
R815	0699-3941	1	RESISTOR 511 +-1% .063W TKF TC0+-200	00746	MCR03-F-5110
R816	0699-3939	1	RESISTOR 422 +-1% .063W TKF TC0+-200	09891	RK73H1J4220F
R817	0699-3902	1	RESISTOR 11 +-1% .063W TKF TC0+-200	09891	RK73H1J11R0F
R818	0699-3939	1	RESISTOR 422 +-1% .063W TKF TC0+-200	09891	RK73H1J4220F

 **Indicates factory-selected value*

Agilent Part Number E4403-60057
3.0 GHz Front End/LO

Reference Designator	Agilent Part Number	Qty	Description	Mgr Code	Mfr Part Number
R819	0699-3918	1	RESISTOR 51.1 +-1% .063W TKF TC0+-200	00746	MCR03-F-51R1
R820	0699-4016	1	RESISTOR 1M +-1% .063W TKF TC0+-200	00746	MCR03-F-1004
R821	0699-3574	1	RESISTOR 0 .0625W TKF	09891	RM73Z1JT
R822	0699-4016	1	RESISTOR 1M +-1% .063W TKF TC0+-200	00746	MCR03-F-1004
R823	0699-3918	1	RESISTOR 51.1 +-1% .063W TKF TC0+-200	00746	MCR03-F-51R1
R900	0699-3918	1	RESISTOR 51.1 +-1% .063W TKF TC0+-200	00746	MCR03-F-51R1
R901	0699-3918	1	RESISTOR 51.1 +-1% .063W TKF TC0+-200	00746	MCR03-F-51R1
R925	0699-3924	1	RESISTOR 100 +-1% .063W TKF TC0+-200	00746	MCR03-F-1000
R926	0699-3910	1	RESISTOR 23.7 +-1% .063W TKF TC0+-200	09891	RK73H1J23R7F
R929	0699-3978	1	RESISTOR 21.5K +-1% .063W TKF TC0+-200	09891	RK73H1J2152F
R950	0699-3924	1	RESISTOR 100 +-1% .063W TKF TC0+-200	00746	MCR03-F-1000
R951	0699-3907	1	RESISTOR 17.8 +-1% .063W TKF TC0+-200	09891	RK73H1J17R8F
R952	0699-3935	1	RESISTOR 287 +-1% .063W TKF TC0+-200	00746	MCR03-F-2870
R953	0699-3935	1	RESISTOR 287 +-1% .063W TKF TC0+-200	00746	MCR03-F-2870
R984	0699-3933	1	RESISTOR 237 +-1% .063W TKF TC0+-200	00746	MCR03-F-2370
R985	0699-3934	1	RESISTOR 261 +-1% .063W TKF TC0+-200	09891	RK73H1J2610F
R986	0699-3918	1	RESISTOR 51.1 +-1% .063W TKF TC0+-200	00746	MCR03-F-51R1
R987	0699-3918	1	RESISTOR 51.1 +-1% .063W TKF TC0+-200	00746	MCR03-F-51R1
R988	0699-3938	1	RESISTOR 383 +-1% .063W TKF TC0+-200	00746	MCR03-F-3830
R989	0699-3938	1	RESISTOR 383 +-1% .063W TKF TC0+-200	00746	MCR03-F-3830
R990	0699-3938	1	RESISTOR 383 +-1% .063W TKF TC0+-200	00746	MCR03-F-3830
R991	0699-3970	1	RESISTOR 10K +-1% .063W TKF TC0+-200	09891	RK73H1J1002F
R992	0699-3970	1	RESISTOR 10K +-1% .063W TKF TC0+-200	09891	RK73H1J1002F
R993	0699-3964	1	RESISTOR 5.11K +-1% .063W TKF TC0+-200	09891	RK73H1J5111F
R994	0699-3970	1	RESISTOR 10K +-1% .063W TKF TC0+-200	09891	RK73H1J1002F
R995	0699-3970	1	RESISTOR 10K +-1% .063W TKF TC0+-200	09891	RK73H1J1002F
R996	0699-3970	1	RESISTOR 10K +-1% .063W TKF TC0+-200	09891	RK73H1J1002F
R997	0699-3970	1	RESISTOR 10K +-1% .063W TKF TC0+-200	09891	RK73H1J1002F
R998	0699-3908	1	RESISTOR 19.6 +-1% .063W TKF TC0+-200	09891	RK73H1J19R6F
R999	0699-3908	1	RESISTOR 19.6 +-1% .063W TKF TC0+-200	09891	RK73H1J19R6F

**Indicates factory-selected value*

Agilent Part Number E4403-60057
3.0 GHz Front End/LO

Reference Designator	Agilent Part Number	Qty	Description	Mgr Code	Mfr Part Number
R1000	0699-3970	1	RESISTOR 10K +-1% .063W TKF TC0+-200	09891	RK73H1J1002F
R1001	0699-3947	1	RESISTOR 1K +-1% .063W TKF TC0+-200	00746	MCR03-F-1001
R1002	0699-3947	1	RESISTOR 1K +-1% .063W TKF TC0+-200	00746	MCR03-F-1001
R1003	0699-3930	1	RESISTOR 178 +-1% .063W TKF TC0+-200	00746	MCR03-F-1780
R1004	0699-3967	1	RESISTOR 7.5K +-1% .063W TKF TC0+-200	09891	RK73H1J7501F
R1005	0699-3968	1	RESISTOR 8.25K +-1% .063W TKF TC0+-200	09891	RK73H1J8251F
R1006	0699-4007	1	RESISTOR 383K +-1% .063W TKF TC0+-200	09891	RK73H1J3833F
R1007	0699-3981	1	RESISTOR 28.7K +-1% .063W TKF TC0+-200	09891	RK73H1J2872F
R1008	0699-3985	1	RESISTOR 42.2K +-1% .063W TKF TC0+-200	09891	RK73H1J4222F
R1009	0699-4003	1	RESISTOR 261K +-1% .063W TKF TC0+-200	09891	RK73H1J2613F
R1010	0699-3936	1	RESISTOR 316 +-1% .063W TKF TC0+-200	00746	MCR03-F-3160
R1014	0699-3974	1	RESISTOR 14.7K +-1% .063W TKF TC0+-200	00746	MCR03-F-1472
R1015	0699-3982	1	RESISTOR 31.6K +-1% .063W TKF TC0+-200	09891	RK73H1J3162F
R1016	0699-3982	1	RESISTOR 31.6K +-1% .063W TKF TC0+-200	09891	RK73H1J3162F
R1017	0699-4016	1	RESISTOR 1M +-1% .063W TKF TC0+-200	00746	MCR03-F-1004
R1018	0699-3922	1	RESISTOR 82.5 +-1% .063W TKF TC0+-200	09891	RK73H1J82R5F
R1019	0699-3972	1	RESISTOR 12.1K +-1% .063W TKF TC0+-200	09891	RK73H1J1212F
R1020	0699-3942	1	RESISTOR 619 +-1% .063W TKF TC0+-200	00746	MCR03-F-6190
R1021	0699-3951	1	RESISTOR 1.47K +-1% .063W TKF TC0+-200	00746	MCR03-F-1471
R1022	0699-3999	1	RESISTOR 178K +-1% .063W TKF TC0+-200	09891	RK73H1J1783F
R1024	0699-3951	1	RESISTOR 1.47K +-1% .063W TKF TC0+-200	00746	MCR03-F-1471
R1025	0699-3960	1	RESISTOR 3.48K +-1% .063W TKF TC0+-200	09891	RK73H1J3481F
R1026	0699-3980	1	RESISTOR 26.1K +-1% .063W TKF TC0+-100	09891	RK73H1J2612F
R1027	0699-3934	1	RESISTOR 261 +-1% .063W TKF TC0+-200	09891	RK73H1J2610F
R1028	0699-3934	1	RESISTOR 261 +-1% .063W TKF TC0+-200	09891	RK73H1J2610F
R1029	0699-3969	1	RESISTOR 9.09K +-1% .063W TKF TC0+-200	09891	RK73H1J9091F
R1030	0699-3992	1	RESISTOR 90.9K +-1% .063W TKF TC0+-200	09891	RK73H1J9092F
R1031	0699-3984	1	RESISTOR 38.3K +-1% .063W TKF TC0+-200	09891	RK73H1J3832F
R1032	0699-3984	1	RESISTOR 38.3K +-1% .063W TKF TC0+-200	09891	RK73H1J3832F
R1033	0699-3984	1	RESISTOR 38.3K +-1% .063W TKF TC0+-200	09891	RK73H1J3832F

 **Indicates factory-selected value*

Agilent Part Number E4403-60057
3.0 GHz Front End/LO

Reference Designator	Agilent Part Number	Qty	Description	Mgr Code	Mfr Part Number
R1034	0699-3973	1	RESISTOR 13.3K +-1% .063W TKF TC0+-200	09891	RK73H1J1332F
R1035	0699-3945	1	RESISTOR 825 +-1% .063W TKF TC0+-200	00746	MCR03-F-8250
R1036	0699-3953	1	RESISTOR 1.78K +-1% .063W TKF TC0+-200	00746	MCR03-F-1781
R1038	0699-3907	1	RESISTOR 17.8 +-1% .063W TKF TC0+-200	09891	RK73H1J17R8F
R1039	0699-3574	1	RESISTOR 0 .0625W TKF	09891	RM73Z1JT
R1040	0699-3933	1	RESISTOR 237 +-1% .063W TKF TC0+-200	00746	MCR03-F-2370
R1041	0699-3924	1	RESISTOR 100 +-1% .063W TKF TC0+-200	00746	MCR03-F-1000
R1042	0699-3367	1	RESISTOR 5.62K +-1% .0625W TKF TC0+-200	00746	MCR03-F-5621
R1043	0699-3367	1	RESISTOR 5.62K +-1% .0625W TKF TC0+-200	00746	MCR03-F-5621
R1044	0699-3367	1	RESISTOR 5.62K +-1% .0625W TKF TC0+-200	00746	MCR03-F-5621
R1045	0699-3367	1	RESISTOR 5.62K +-1% .0625W TKF TC0+-200	00746	MCR03-F-5621
R1046	0699-3997	1	RESISTOR 147K +-1% .063W TKF TC0+-200	09891	RK73H1J1473F
R1047	0699-3956	1	RESISTOR 2.37K +-1% .063W TKF TC0+-200	09891	RK73H1J2371F
R1048	0699-3956	1	RESISTOR 2.37K +-1% .063W TKF TC0+-200	09891	RK73H1J2371F
R1049	0699-3977	1	RESISTOR 19.6K +-1% .063W TKF TC0+-200	09891	RK73H1J1962F
R1050	0699-3970	1	RESISTOR 10K +-1% .063W TKF TC0+-200	09891	RK73H1J1002F
R1051	0699-3970	1	RESISTOR 10K +-1% .063W TKF TC0+-200	09891	RK73H1J1002F
R1052	0699-3970	1	RESISTOR 10K +-1% .063W TKF TC0+-200	09891	RK73H1J1002F
R1053	0699-3957	1	RESISTOR 2.61K +-1% .063W TKF TC0+-200	09891	RK73H1J2611F
R1054	0699-3951	1	RESISTOR 1.47K +-1% .063W TKF TC0+-200	00746	MCR03-F-1471
R1055	0699-3574	1	RESISTOR 0 .0625W TKF	09891	RM73Z1JT
R1056	0699-4016	1	RESISTOR 1M +-1% .063W TKF TC0+-200	00746	MCR03-F-1004
R1057	0699-4016	1	RESISTOR 1M +-1% .063W TKF TC0+-200	00746	MCR03-F-1004
R1065	0699-1318	1	RESISTOR 1K +-1% .125W TKF TC0+-100	00746	MCR18-F-1001
R1067	0699-3955	1	RESISTOR 2.15K +-1% .063W TKF TC0+-200	09891	RK73H1J2151F
R1068	0699-3947	1	RESISTOR 1K +-1% .063W TKF TC0+-200	00746	MCR03-F-1001
R1069	0699-3937	1	RESISTOR 348 +-1% .063W TKF TC0+-200	00746	MCR03-F-3480
R1071	0699-1381	1	RESISTOR 3.48K +-1% .125W TKF TC0+-100	05524	CRCW12063481F
R1072	0699-2828	1	RESISTOR 1.5K +-0.1% .125W TF TC0+-25	01172	BLU-1206 1K5 .1% 25PPM

Agilent Part Number E4403-60057
3.0 GHz Front End/LO

Reference Designator	Agilent Part Number	Qty	Description	Mgr Code	Mfr Part Number
R1073	0699-3941	1	RESISTOR 511 +-1% .063W TKF TC0+-200	00746	MCR03-F-5110
R1074	0699-1376	1	RESISTOR 2.15K +-1% .125W TKF TC0+-100	09891	RK73H2BT2151F
R1075	0699-3955	1	RESISTOR 2.15K +-1% .063W TKF TC0+-200	09891	RK73H1J2151F
R1076	0699-2826	1	RESISTOR 3K +-0.1% .125W TF TC0+-25	02499	W1206R033001BT
R1077	0699-3924	1	RESISTOR 100 +-1% .063W TKF TC0+-200	00746	MCR03-F-1000
R1078	0699-3924	1	RESISTOR 100 +-1% .063W TKF TC0+-200	00746	MCR03-F-1000
R1079	0699-3924	1	RESISTOR 100 +-1% .063W TKF TC0+-200	00746	MCR03-F-1000
R1080	0699-2488	1	RESISTOR 100 +-0.1% .125W TF TC0+-25	09891	RN73E2BTE1000B
R1081	0699-3925	1	RESISTOR 110 +-1% .063W TKF TC0+-200	00746	MCR03-F-1100
R1084	0699-3924	1	RESISTOR 100 +-1% .063W TKF TC0+-200	00746	MCR03-F-1000
R1085	0699-3918	1	RESISTOR 51.1 +-1% .063W TKF TC0+-200	00746	MCR03-F-51R1
R1087	0699-3918	1	RESISTOR 51.1 +-1% .063W TKF TC0+-200	00746	MCR03-F-51R1
R1089	0699-3970	1	RESISTOR 10K +-1% .063W TKF TC0+-200	09891	RK73H1J1002F
R1090	0699-3970	1	RESISTOR 10K +-1% .063W TKF TC0+-200	09891	RK73H1J1002F
R1095	0699-2847	1	RESISTOR 2K +-0.1% .125W TF TC0+-25	01172	BLU-1206 2K .1% 25PPM
R1098	0699-3918	1	RESISTOR 51.1 +-1% .063W TKF TC0+-200	00746	MCR03-F-51R1
R1099	0699-3964	1	RESISTOR 5.11K +-1% .063W TKF TC0+-200	09891	RK73H1J5111F
R1100	0699-3964	1	RESISTOR 5.11K +-1% .063W TKF TC0+-200	09891	RK73H1J5111F
R1101	0699-3964	1	RESISTOR 5.11K +-1% .063W TKF TC0+-200	09891	RK73H1J5111F
R1102	0699-3947	1	RESISTOR 1K +-1% .063W TKF TC0+-200	00746	MCR03-F-1001
R1106	0699-3947	1	RESISTOR 1K +-1% .063W TKF TC0+-200	00746	MCR03-F-1001
R1110	0699-2831	1	RESISTOR 150 +-0.1% .125W TF TC0+-25	02499	W1206R031500BT
R1111	0699-2831	1	RESISTOR 150 +-0.1% .125W TF TC0+-25	02499	W1206R031500BT
R1112	0699-2490	1	RESISTOR 1K +-0.1% .125W TF TC0+-25	01172	BLU-1206 1K .1% 25PPM
R1113	0699-1391	1	RESISTOR 10K +-1% .125W TKF TC0+-100	05524	CRCW12061002F
R1114	0699-3901	1	RESISTOR 10 +-1% .063W TKF TC0+-200	00746	MCR03-F-10R0
R1115	0699-3910	1	RESISTOR 23.7 +-1% .063W TKF TC0+-200	09891	RK73H1J23R7F
R1116	0699-3932	1	RESISTOR 215 +-1% .063W TKF TC0+-200	00746	MCR03-F-2150

 **Indicates factory-selected value*

Agilent Part Number E4403-60057
3.0 GHz Front End/LO

Reference Designator	Agilent Part Number	Qty	Description	Mgr Code	Mfr Part Number
R1117	0699-3932	1	RESISTOR 215 +-1% .063W TKF TC0+-200	00746	MCR03-F-2150
R1118	0699-2833	1	RESISTOR 300 +-0.1% .125W TF TC0+-25	01172	BLU-1206 300R .1% 25PPM
R1119	0699-2826	1	RESISTOR 3K +-0.1% .125W TF TC0+-25	02499	W1206R033001BT
R1120	0699-2483	1	RESISTOR 4K +-0.1% .125W TF TC0+-25	02499	W1206R034001BT
R1121	0699-3918	1	RESISTOR 51.1 +-1% .063W TKF TC0+-200	00746	MCR03-F-51R1
R1122	0699-3918	1	RESISTOR 51.1 +-1% .063W TKF TC0+-200	00746	MCR03-F-51R1
R1127	0699-3970	1	RESISTOR 10K +-1% .063W TKF TC0+-200	09891	RK73H1J1002F
R1128	0699-3908	1	RESISTOR 19.6 +-1% .063W TKF TC0+-200	09891	RK73H1J19R6F
R1129	0699-3947	1	RESISTOR 1K +-1% .063W TKF TC0+-200	00746	MCR03-F-1001
R1130	0699-3908	1	RESISTOR 19.6 +-1% .063W TKF TC0+-200	09891	RK73H1J19R6F
R1134	0699-2833	1	RESISTOR 300 +-0.1% .125W TF TC0+-25	01172	BLU-1206 300R .1% 25PPM
R1135	0699-2833	1	RESISTOR 300 +-0.1% .125W TF TC0+-25	01172	BLU-1206 300R .1% 25PPM
R1136	0699-3918	1	RESISTOR 51.1 +-1% .063W TKF TC0+-200	00746	MCR03-F-51R1
R1142	0699-3918	1	RESISTOR 51.1 +-1% .063W TKF TC0+-200	00746	MCR03-F-51R1
R1300	0699-3927	1	RESISTOR 133 +-1% .063W TKF TC0+-200	00746	MCR03-F-1330
R1301	0699-3932	1	RESISTOR 215 +-1% .063W TKF TC0+-200	00746	MCR03-F-2150
R1302	0699-3927	1	RESISTOR 133 +-1% .063W TKF TC0+-200	00746	MCR03-F-1330
R1303	0699-3932	1	RESISTOR 215 +-1% .063W TKF TC0+-200	00746	MCR03-F-2150
R1304	0699-3932	1	RESISTOR 215 +-1% .063W TKF TC0+-200	00746	MCR03-F-2150
R1305	0699-3932	1	RESISTOR 215 +-1% .063W TKF TC0+-200	00746	MCR03-F-2150
R1306	0699-3932	1	RESISTOR 215 +-1% .063W TKF TC0+-200	00746	MCR03-F-2150
R1307	0699-3914	1	RESISTOR 34.8 +-1% .063W TKF TC0+-200	00746	MCR03-F-34R8
R1308	0699-3574	1	RESISTOR 0 .0625W TKF	09891	RM73Z1JT
R1309	0699-3927	1	RESISTOR 133 +-1% .063W TKF TC0+-200	00746	MCR03-F-1330
R1310	0699-3914	1	RESISTOR 34.8 +-1% .063W TKF TC0+-200	00746	MCR03-F-34R8
R1314	0699-3970	1	RESISTOR 10K +-1% .063W TKF TC0+-200	09891	RK73H1J1002F
R1315	0699-3970	1	RESISTOR 10K +-1% .063W TKF TC0+-200	09891	RK73H1J1002F
R1316	0699-3970	1	RESISTOR 10K +-1% .063W TKF TC0+-200	09891	RK73H1J1002F

Agilent Part Number E4403-60057
3.0 GHz Front End/LO

Reference Designator	Agilent Part Number	Qty	Description	Mgr Code	Mfr Part Number
R1410	0699-2836	1	RESISTOR 15K +-0.1% .125W TF TC0+-25	01172	BLU-1206 15K .1% 25PPM
R1420	0699-2832	1	RESISTOR 200 +-0.1% .125W TF TC0+-25	02499	W1206R032000BT
R1421	0699-2832	1	RESISTOR 200 +-0.1% .125W TF TC0+-25	02499	W1206R032000BT
R1422	0699-2832	1	RESISTOR 200 +-0.1% .125W TF TC0+-25	02499	W1206R032000BT
R1423	0699-2832	1	RESISTOR 200 +-0.1% .125W TF TC0+-25	02499	W1206R032000BT
R1424	0699-2832	1	RESISTOR 200 +-0.1% .125W TF TC0+-25	02499	W1206R032000BT
R1425	0699-2843	1	RESISTOR 100K +-0.1% .125W TF TC0+-25	01172	BLU-1206 100K .1% 25PPM
R1426	0699-1415	1	RESISTOR 100 +-1% .125W TKF TC0+-100	05524	CRCW12061000F
R1427	0699-2836	1	RESISTOR 15K +-0.1% .125W TF TC0+-25	01172	BLU-1206 15K .1% 25PPM
R1428	0699-1426	1	RESISTOR 287 +-1% .125W TKF TC0+-100	00746	MCR18-F-2870
R1429	0699-1415	1	RESISTOR 100 +-1% .125W TKF TC0+-100	05524	CRCW12061000F
R1430	0699-1386	1	RESISTOR 5.62K +-1% .125W TKF TC0+-100	09891	RK73H2BT5621F
R1431	0699-1344	1	RESISTOR 10 +-1% .125W TKF TC0+-100	09891	RK73H2BT10R0F
R1500	0699-3913	1	RESISTOR 31.6 +-1% .063W TKF TC0+-200	09891	RK73H1J31R6F
R1501	0699-3913	1	RESISTOR 31.6 +-1% .063W TKF TC0+-200	09891	RK73H1J31R6F
R1502	0699-3913	1	RESISTOR 31.6 +-1% .063W TKF TC0+-200	09891	RK73H1J31R6F
R1504	0699-3913	1	RESISTOR 31.6 +-1% .063W TKF TC0+-200	09891	RK73H1J31R6F
R1505	0699-3913	1	RESISTOR 31.6 +-1% .063W TKF TC0+-200	09891	RK73H1J31R6F
R1507	0699-3941	1	RESISTOR 511 +-1% .063W TKF TC0+-200	00746	MCR03-F-5110
R1508	0699-3913	1	RESISTOR 31.6 +-1% .063W TKF TC0+-200	09891	RK73H1J31R6F
R1509	0699-3913	1	RESISTOR 31.6 +-1% .063W TKF TC0+-200	09891	RK73H1J31R6F
R1520	0699-3924	1	RESISTOR 100 +-1% .063W TKF TC0+-200	00746	MCR03-F-1000
R1521	0699-3932	1	RESISTOR 215 +-1% .063W TKF TC0+-200	00746	MCR03-F-2150
R1522	0699-3947	1	RESISTOR 1K +-1% .063W TKF TC0+-200	00746	MCR03-F-1001
R1523	0699-3924	1	RESISTOR 100 +-1% .063W TKF TC0+-200	00746	MCR03-F-1000
R1524	0699-3942	1	RESISTOR 619 +-1% .063W TKF TC0+-200	00746	MCR03-F-6190
R1526	0699-3970	1	RESISTOR 10K +-1% .063W TKF TC0+-200	09891	RK73H1J1002F
R1527	0699-3959	1	RESISTOR 3.16K +-1% .063W TKF TC0+-200	00746	MCR03-F-3161

 **Indicates factory-selected value*

Agilent Part Number E4403-60057
3.0 GHz Front End/LO

Reference Designator	Agilent Part Number	Qty	Description	Mgr Code	Mfr Part Number
R1528	0699-3964	1	RESISTOR 5.11K +-1% .063W TKF TC0+-200	09891	RK73H1J5111F
R1600	0699-1361	1	RESISTOR 51.1 +-1% .125W TKF TC0+-100	05524	CRCW120651R1F
R1601	0699-1366	1	RESISTOR 82.5 +-1% .125W TKF TC0+-100	05524	CRCW120682R5F
R1602	0699-1366	1	RESISTOR 82.5 +-1% .125W TKF TC0+-100	05524	CRCW120682R5F
R1603	0699-3947	1	RESISTOR 1K +-1% .063W TKF TC0+-200	00746	MCR03-F-1001
R1604	0699-3964	1	RESISTOR 5.11K +-1% .063W TKF TC0+-200	09891	RK73H1J5111F
R1605	0699-3962	1	RESISTOR 4.22K +-1% .063W TKF TC0+-200	09891	RK73H1J4221F
R1606	0699-3970	1	RESISTOR 10K +-1% .063W TKF TC0+-200	09891	RK73H1J1002F
R1607	0699-3962	1	RESISTOR 4.22K +-1% .063W TKF TC0+-200	09891	RK73H1J4221F
R1608	0699-3970	1	RESISTOR 10K +-1% .063W TKF TC0+-200	09891	RK73H1J1002F
R1609	0699-3959	1	RESISTOR 3.16K +-1% .063W TKF TC0+-200	00746	MCR03-F-3161
R1610	0699-3970	1	RESISTOR 10K +-1% .063W TKF TC0+-200	09891	RK73H1J1002F
R1611	0699-3959	1	RESISTOR 3.16K +-1% .063W TKF TC0+-200	00746	MCR03-F-3161
R1612	0699-3970	1	RESISTOR 10K +-1% .063W TKF TC0+-200	09891	RK73H1J1002F
R1613	0699-3956	1	RESISTOR 2.37K +-1% .063W TKF TC0+-200	09891	RK73H1J2371F
R1614	0699-3972	1	RESISTOR 12.1K +-1% .063W TKF TC0+-200	09891	RK73H1J1212F
R1615	0699-3917	1	RESISTOR 46.4 +-1% .063W TKF TC0+-200	09891	RK73H1J46R4F
R1616	0699-2890	1	RESISTOR 3.3 +-5% .125W TKF TC0+-300	00746	MCR18-J-3R3
R1617	0699-3917	1	RESISTOR 46.4 +-1% .063W TKF TC0+-200	09891	RK73H1J46R4F
R1618	0699-3950	1	RESISTOR 1.33K +-1% .063W TKF TC0+-200	09891	RK73H1J1331F
R1619	0699-3950	1	RESISTOR 1.33K +-1% .063W TKF TC0+-200	09891	RK73H1J1331F
R1620	0699-3941	1	RESISTOR 511 +-1% .063W TKF TC0+-200	00746	MCR03-F-5110
R1621	0699-3950	1	RESISTOR 1.33K +-1% .063W TKF TC0+-200	09891	RK73H1J1331F
R1622	0699-3950	1	RESISTOR 1.33K +-1% .063W TKF TC0+-200	09891	RK73H1J1331F
R1623	0699-3941	1	RESISTOR 511 +-1% .063W TKF TC0+-200	00746	MCR03-F-5110
R1624	0699-3905	1	RESISTOR 14.7 +-1% .063W TKF TC0+-200	09891	RK73H1J14R7F
R1625	0699-3922	1	RESISTOR 82.5 +-1% .063W TKF TC0+-200	09891	RK73H1J82R5F
R1626	0699-3905	1	RESISTOR 14.7 +-1% .063W TKF TC0+-200	09891	RK73H1J14R7F
R1627	0699-1426	1	RESISTOR 287 +-1% .125W TKF TC0+-100	00746	MCR18-F-2870
R1628	0699-1344	1	RESISTOR 10 +-1% .125W TKF TC0+-100	09891	RK73H2BT10R0F

Agilent Part Number E4403-60057
3.0 GHz Front End/LO

Reference Designator	Agilent Part Number	Qty	Description	Mgr Code	Mfr Part Number
R1629	0699-1344	1	RESISTOR 10 +-1% .125W TKF TC0+-100	09891	RK73H2BT10R0F
R1630	0699-3970	1	RESISTOR 10K +-1% .063W TKF TC0+-200	09891	RK73H1J1002F
R1650	0699-3924	1	RESISTOR 100 +-1% .063W TKF TC0+-200	00746	MCR03-F-1000
R1651	0699-3924	1	RESISTOR 100 +-1% .063W TKF TC0+-200	00746	MCR03-F-1000
R1652	0699-3920	1	RESISTOR 68.1 +-1% .063W TKF TC0+-200	09891	RK73H1J68R1F
R1653	0699-3920	1	RESISTOR 68.1 +-1% .063W TKF TC0+-200	09891	RK73H1J68R1F
R1654	0699-3920	1	RESISTOR 68.1 +-1% .063W TKF TC0+-200	09891	RK73H1J68R1F
R1655	0699-3920	1	RESISTOR 68.1 +-1% .063W TKF TC0+-200	09891	RK73H1J68R1F
R1656	0699-3931	1	RESISTOR 196 +-1% .063W TKF TC0+-200	09891	RK73H1J1960F
R1657	0699-3931	1	RESISTOR 196 +-1% .063W TKF TC0+-200	09891	RK73H1J1960F
R1658	0699-3901	1	RESISTOR 10 +-1% .063W TKF TC0+-200	00746	MCR03-F-10R0
R1659	0699-3907	1	RESISTOR 17.8 +-1% .063W TKF TC0+-200	09891	RK73H1J17R8F
R1660	0699-3918	1	RESISTOR 51.1 +-1% .063W TKF TC0+-200	00746	MCR03-F-51R1
R1661	0699-3918	1	RESISTOR 51.1 +-1% .063W TKF TC0+-200	00746	MCR03-F-51R1
R1672	0699-3918	1	RESISTOR 51.1 +-1% .063W TKF TC0+-200	00746	MCR03-F-51R1
R1673	0699-3931	1	RESISTOR 196 +-1% .063W TKF TC0+-200	09891	RK73H1J1960F
R1674	0699-4016	1	RESISTOR 1M +-1% .063W TKF TC0+-200	00746	MCR03-F-1004
R1675	0699-3574	1	RESISTOR 0 .0625W TKF	09891	RM73Z1JT
R1676	0699-4016	1	RESISTOR 1M +-1% .063W TKF TC0+-200	00746	MCR03-F-1004
R1680	0699-3993	1	RESISTOR 100K +-1% .063W TKF TC0+-200	09891	RK73H1J1003F
R1700	0699-3962	1	RESISTOR 4.22K +-1% .063W TKF TC0+-200	09891	RK73H1J4221F
R1701	0699-3980	1	RESISTOR 26.1K +-1% .063W TKF TC0+-100	09891	RK73H1J2612F
R1702	0699-3952	1	RESISTOR 1.62K +-1% .063W TKF TC0+-200	09891	RK73H1J1621F
R1703	0699-3963	1	RESISTOR 4.64K +-1% .063W TKF TC0+-200	09891	RK73H1J4641F
R1704	0699-3963	1	RESISTOR 4.64K +-1% .063W TKF TC0+-200	09891	RK73H1J4641F
R1705	0699-3974	1	RESISTOR 14.7K +-1% .063W TKF TC0+-200	00746	MCR03-F-1472
R1706	0699-3984	1	RESISTOR 38.3K +-1% .063W TKF TC0+-200	09891	RK73H1J3832F
R1707	0699-3974	1	RESISTOR 14.7K +-1% .063W TKF TC0+-200	00746	MCR03-F-1472
R1708	0699-3984	1	RESISTOR 38.3K +-1% .063W TKF TC0+-200	09891	RK73H1J3832F
R1709	0699-2889	1	RESISTOR 4.7 +-5% .125W TKF TC0+-500	00746	MCR18-J-4R7

 **Indicates factory-selected value*

Agilent Part Number E4403-60057
3.0 GHz Front End/LO

Reference Designator	Agilent Part Number	Qty	Description	Mgr Code	Mfr Part Number
R1710	0699-1330	1	RESISTOR 100K +-1% .125W TKF TC0+-100	00746	MCR18-F-1003
R1712	0699-1445	1	RESISTOR 215K +-1% .125W TKF TC0+-100	05524	CRCW12062153F
R1721	0699-1422	1	RESISTOR 196 +-1% .125W TKF TC0+-100	09891	RK73H2BT1960F
R1723	0699-3942	1	RESISTOR 619 +-1% .063W TKF TC0+-200	00746	MCR03-F-6190
R1730	0699-4001	1	RESISTOR 215K +-1% .063W TKF TC0+-200	09891	RK73H1J2153F
R1731	0699-4001	1	RESISTOR 215K +-1% .063W TKF TC0+-200	09891	RK73H1J2153F
R1732	0699-3955	1	RESISTOR 2.15K +-1% .063W TKF TC0+-200	09891	RK73H1J2151F
R1733	0699-3978	1	RESISTOR 21.5K +-1% .063W TKF TC0+-200	09891	RK73H1J2152F
R1734	0699-3978	1	RESISTOR 21.5K +-1% .063W TKF TC0+-200	09891	RK73H1J2152F
R1735	0699-3955	1	RESISTOR 2.15K +-1% .063W TKF TC0+-200	09891	RK73H1J2151F
R1738	0699-1904	1	RESISTOR 1.62K +-1% .125W TKF TC0+-100	05524	CRCW12061621F
R1739	0699-3955	1	RESISTOR 2.15K +-1% .063W TKF TC0+-200	09891	RK73H1J2151F
R1740	0699-1503	1	RESISTOR 0 CWM	05524	CRCW1206000
R1741	0699-2846	1	RESISTOR 5K +-0.1% .125W TF TC0+-25	02499	W1206R035001BT
R1742	0699-2846	1	RESISTOR 5K +-0.1% .125W TF TC0+-25	02499	W1206R035001BT
R1743	0699-2846	1	RESISTOR 5K +-0.1% .125W TF TC0+-25	02499	W1206R035001BT
R1744	0699-2846	1	RESISTOR 5K +-0.1% .125W TF TC0+-25	02499	W1206R035001BT
R1745	0699-3918	1	RESISTOR 51.1 +-1% .063W TKF TC0+-200	00746	MCR03-F-51R1
R1746	0699-3924	1	RESISTOR 100 +-1% .063W TKF TC0+-200	00746	MCR03-F-1000
R1747	0699-1428	1	RESISTOR 348 +-1% .125W TKF TC0+-100	05524	CRCW12063480F
R1750	0699-3936	1	RESISTOR 316 +-1% .063W TKF TC0+-200	00746	MCR03-F-3160
R1751	0699-3913	1	RESISTOR 31.6 +-1% .063W TKF TC0+-200	09891	RK73H1J31R6F
R1752	0699-2776	1	RESISTOR 1 +-10% .125W TKF TC0+-500	00746	MCR18-K-010
R1760	0699-1503	1	RESISTOR 0 CWM	05524	CRCW1206000
R1800	0699-1423	1	RESISTOR 215 +-1% .125W TKF TC0+-100	05524	CRCW12062150F
R1801	0699-1423	1	RESISTOR 215 +-1% .125W TKF TC0+-100	05524	CRCW12062150F
R1802	0699-1423	1	RESISTOR 215 +-1% .125W TKF TC0+-100	05524	CRCW12062150F
R1803	0699-1423	1	RESISTOR 215 +-1% .125W TKF TC0+-100	05524	CRCW12062150F
R1804	0699-1423	1	RESISTOR 215 +-1% .125W TKF TC0+-100	05524	CRCW12062150F
R1805	0699-1423	1	RESISTOR 215 +-1% .125W TKF TC0+-100	05524	CRCW12062150F

Agilent Part Number E4403-60057
3.0 GHz Front End/LO

Reference Designator	Agilent Part Number	Qty	Description	Mgr Code	Mfr Part Number
R1806	0699-1423	1	RESISTOR 215 +-1% .125W TKF TC0+-100	05524	CRCW12062150F
R1807	0699-1423	1	RESISTOR 215 +-1% .125W TKF TC0+-100	05524	CRCW12062150F
R2042	0699-3918	1	RESISTOR 51.1 +-1% .063W TKF TC0+-200	00746	MCR03-F-51R1
R2043	0699-3941	1	RESISTOR 511 +-1% .063W TKF TC0+-200	00746	MCR03-F-5110
R2044	0699-3941	1	RESISTOR 511 +-1% .063W TKF TC0+-200	00746	MCR03-F-5110
R2045	0699-2776	1	RESISTOR 1 +-10% .125W TKF TC0+-500	00746	MCR18-K-010
R2047	0699-3910	1	RESISTOR 23.7 +-1% .063W TKF TC0+-200	09891	RK73H1J23R7F
R2048	0699-3960	1	RESISTOR 3.48K +-1% .063W TKF TC0+-200	09891	RK73H1J3481F
R2049	0699-3947	1	RESISTOR 1K +-1% .063W TKF TC0+-200	00746	MCR03-F-1001
R2050	0699-3931	1	RESISTOR 196 +-1% .063W TKF TC0+-200	09891	RK73H1J1960F
R2061	0699-3941	1	RESISTOR 511 +-1% .063W TKF TC0+-200	00746	MCR03-F-5110
R2062	0699-3941	1	RESISTOR 511 +-1% .063W TKF TC0+-200	00746	MCR03-F-5110
R2063	0699-3901	1	RESISTOR 10 +-1% .063W TKF TC0+-200	00746	MCR03-F-10R0
R2064	0699-2776	1	RESISTOR 1 +-10% .125W TKF TC0+-500	00746	MCR18-K-010
U52	1820-5938	1	IC GATE CMOS/ACT NAND QUAD 2-INP	01698	SN74ACT00D
U55	1826-1572	1	IC COMPARATOR PRCN DUAL 8 PIN PLSTC-SOIC	02910	LM393D
U56	1821-1821	1	IC-ASIC GT-ARY 60K GATES CMOS 60081	08779	M60081L-0124FP
U57	1821-0246	1	IC PRESCR ECL	02037	MC12034ADR2 (SELECTED)
U58	1821-4291	1	IC-ASIC CL-BSD CMOS 64046 PLCC	02037	SC64046FN
U59	1826-2965	1	IC RF/IF AMPL SINGLE 4 PIN U-WAVE-PILL	01542	MGA-86576
U60	1GC1-4207	1	DC-10 /4 SOIC8	28480	1GC1-4207
U61	1826-1402	1	IC PWR MGT-V-REG-FXD-POS 4.8/5.2V 8 PINS	03406	LM78L05ACM
U62	1820-4966	1	IC FF CMOS/HC D-TYPE POS-EDGE-TRIG	01698	SN74HC74D
U64	1826-2153	1	D/A 12-BIT 20-PLCC CMOS	03285	AD7545AKP
U65	1820-6154	1	IC-PROGRAMMABLE INTERVAL TIMER	28480	1820-6154
U66	1826-1950	1	IC COMPARATOR HS SINGLE 8 PIN PLSTC-SOIC	10858	LT1016CS8
U70	1826-1985	1	ANALOG SWITCH 4 SPST 16 -P-SOIC	05524	DG411DY
U74	1820-8820	1	IC GATE CMOS/ACT NAND TPL 3-INP	02237	74ACT10SC
U75	1826-2722	1	D/A 12-BIT 16-P-SOIC CMOS	03285	AD7243AR

 **Indicates factory-selected value*

Agilent Part Number E4403-60057
3.0 GHz Front End/LO

Reference Designator	Agilent Part Number	Qty	Description	Mgr Code	Mfr Part Number
U76	1820-7247	1	IC CNTR CMOS/AC BIN UP/DOWN SYNC/ASYNC	02237	74AC191SCX.
U77	1820-7247	1	IC CNTR CMOS/AC BIN UP/DOWN SYNC/ASYNC	02237	74AC191SCX.
U78	1820-7247	1	IC CNTR CMOS/AC BIN UP/DOWN SYNC/ASYNC	02237	74AC191SCX.
U79	1826-1925	1	IC OP AMP LOW-NOISE SINGLE 8 PIN	03285	OP-27GS
U80	1826-2403	1	IC OP AMP LP DUAL 8 PIN PLSTC-SOIC	36633	MC33178DR2
U81	1826-3000	1	IC AUDIO AMPL LOW-NOISE DUAL 8 PIN	03285	OP275GS
U89	1826-1925	1	IC OP AMP LOW-NOISE SINGLE 8 PIN	03285	OP-27GS
U91	1826-1925	1	IC OP AMP LOW-NOISE SINGLE 8 PIN	03285	OP-27GS
U92	1826-2379	1	IC OP AMP VID-SPCL-FCTN SINGLE 8 PIN	03285	AD829JR
U93	1826-2144	1	IC OP AMP LOW-NOISE SINGLE 8 PIN	03285	OP-37GS
U94	1826-2878	1	IC OP AMP PRCN SINGLE 8 PIN PLSTC-SOIC	03285	AD797BR
U95	1826-1925	1	IC OP AMP LOW-NOISE SINGLE 8 PIN	03285	OP-27GS
U102	E4403-80021	1		28480	E4403-80021
U105	1820-6277	1	IC SHF-RGTR CMOS/HC SYNC/ASYNC SERIAL-IN	02237	MM74HC595M
U106	1820-6277	1	IC SHF-RGTR CMOS/HC SYNC/ASYNC SERIAL-IN	02237	MM74HC595M
U109	1820-6277	1	IC SHF-RGTR CMOS/HC SYNC/ASYNC SERIAL-IN	02237	MM74HC595M
U110	1820-6277	1	IC SHF-RGTR CMOS/HC SYNC/ASYNC SERIAL-IN	02237	MM74HC595M
U111	1820-6277	1	IC SHF-RGTR CMOS/HC SYNC/ASYNC SERIAL-IN	02237	MM74HC595M
U112	1820-6277	1	IC SHF-RGTR CMOS/HC SYNC/ASYNC SERIAL-IN	02237	MM74HC595M
U127	1826-1862	1	IC OP AMP LOW-BIAS-H-IMPD DUAL 8 PIN	04078	TL072CD
U128	1826-1622	1	IC OP AMP LOW-BIAS-H-IMPD QUAD 14 PIN	01698	TL074CD
U465	1826-2926	1	ANALOG SWITCH SPST 8 -P-SOIC	05524	DG419DY
U800	1826-3000	1	IC AUDIO AMPL LOW-NOISE DUAL 8 PIN	03285	OP275GS
U809	1820-6277	1	IC SHF-RGTR CMOS/HC SYNC/ASYNC SERIAL-IN	02237	MM74HC595M
U811	1826-2323	1	IC PWR MGT-V-REG-ADJ-POS 1.2/37V 3 PINS	04078	LM317MDT
U812	1826-2323	1	IC PWR MGT-V-REG-ADJ-POS 1.2/37V 3 PINS	04078	LM317MDT
U813	1826-3000	1	IC AUDIO AMPL LOW-NOISE DUAL 8 PIN	03285	OP275GS
U814	1826-1687	1	IC PWR MGT-V-REF-FXD 9.95/10.05V 8 PINS	10858	LT1021DCS8-10
U815	1826-1925	1	IC OP AMP LOW-NOISE SINGLE 8 PIN	03285	OP-27GS

Agilent Part Number E4403-60057
3.0 GHz Front End/LO

Reference Designator	Agilent Part Number	Qty	Description	Mgr Code	Mfr Part Number
U816	1826-1925	1	IC OP AMP LOW-NOISE SINGLE 8 PIN	03285	OP-27GS
U817	1826-1925	1	IC OP AMP LOW-NOISE SINGLE 8 PIN	03285	OP-27GS
U819	1826-1458	1	D/A 8-DGT 16-P-SOIC	02910	DAC-08ED
U820	1826-1458	1	D/A 8-DGT 16-P-SOIC	02910	DAC-08ED
U822	1826-2149	1	ANALOG SWITCH 4 SPST 16 -P-SOIC	05524	DG444DY
U823	1826-1622	1	IC OP AMP LOW-BIAS-H-IMPD QUAD 14 PIN	01698	TL074CD
U825	1826-3000	1	IC AUDIO AMPL LOW-NOISE DUAL 8 PIN	03285	OP275GS
U826	1826-3000	1	IC AUDIO AMPL LOW-NOISE DUAL 8 PIN	03285	OP275GS
U827	1826-3000	1	IC AUDIO AMPL LOW-NOISE DUAL 8 PIN	03285	OP275GS
U828	1826-1925	1	IC OP AMP LOW-NOISE SINGLE 8 PIN	03285	OP-27GS
U829	1826-1572	1	IC COMPARATOR PRCN DUAL 8 PIN PLSTC-SOIC	02910	LM393D
U833	E4403-80007	1	SERIEL DECODER	28480	E4403-80007
U835	1821-3584	1	IC PRESCR BIPOLAR (UNSPECIFIED)	02037	MC12095D
U836	1821-4233	1	IC PRESCR ECL	02037	MC12052AD
U838	1820-4692	1	IC GATE CMOS/HC NAND QUAD 2-INP	01698	SN74HC00D
U840	1820-5938	1	IC GATE CMOS/ACT NAND QUAD 2-INP	01698	SN74ACT00D
U841	1826-1826	1	IC PWR MGT-V-REG-ADJ-POS 1.2/37V 8 PINS	03406	LM317LM
U842	1820-6277	1	IC SHF-RGTR CMOS/HC SYNC/ASYNC SERIAL-IN	02237	MM74HC595M
U843	1826-1925	1	IC OP AMP LOW-NOISE SINGLE 8 PIN	03285	OP-27GS
U846	1820-5937	1	IC FF CMOS/AC D-TYPE POS-EDGE-TRIG	02237	74AC74SC.
U847	1820-4966	1	IC FF CMOS/HC D-TYPE POS-EDGE-TRIG	01698	SN74HC74D
U850	1826-1925	1	IC OP AMP LOW-NOISE SINGLE 8 PIN	03285	OP-27GS
U851	1826-2147	1	ANALOG MULTIPLEXER 8 CHNL 16 -P-SOIC	05524	DG408DY
U853	1826-1572	1	IC COMPARATOR PRCN DUAL 8 PIN PLSTC-SOIC	02910	LM393D
U854	1826-2261	1	IC TEMP XDCR PRCN SINGLE 8 PIN	03406	LM35DM
U1200	1826-1925	1	IC OP AMP LOW-NOISE SINGLE 8 PIN	03285	OP-27GS
U1201	1820-5940	1	IC GATE CMOS/ACT AND QUAD 2-INP	02237	74ACT08SCX.
U1202	1818-5997	1	IC 16K-BIT EEPROM 500-NS CMOS	13492	CAT35C116S (UNPRGMD)

 **Indicates factory-selected value*

Agilent Part Number E4403-60057
3.0 GHz Front End/LO

Reference Designator	Agilent Part Number	Qty	Description	Mgr Code	Mfr Part Number
U1300	1GM1-4205	1	IC-ANALOG SWT	12918	NEMS
U1301	E4403-80011	1	MMIC ERA3S1RFAMP	28480	E4403-80011
U1302	1826-1912	1	IC OP AMP H-SLEW-RATE DUAL 8 PIN	36633	MC34072DR2
U1303	1826-1912	1	IC OP AMP H-SLEW-RATE DUAL 8 PIN	36633	MC34072DR2
U1310	1820-8941	1	IC MUXR/DATA-SEL CMOS/ACT 4-TO-1-LINE	02237	74ACT253SCX.
U2004	1821-0383	1	IC RCVR ECL/10E	36633	MC10EL16D
U2005	1821-3432	1	IC INV CMOS	02237	NC7S04M5
U2011	1821-3534	1	IC FF ECL/10E DIFF CLK 8-SOIC	36633	MC10EL51D
VR1	1902-1424	1	DIODE-ZNR 5.6V 5% TO-236 (SOT-23)	06394	BZX84C5V6

5300 D-E4403-60057-2

SYM	REVISIONS	APPROVED	DATE

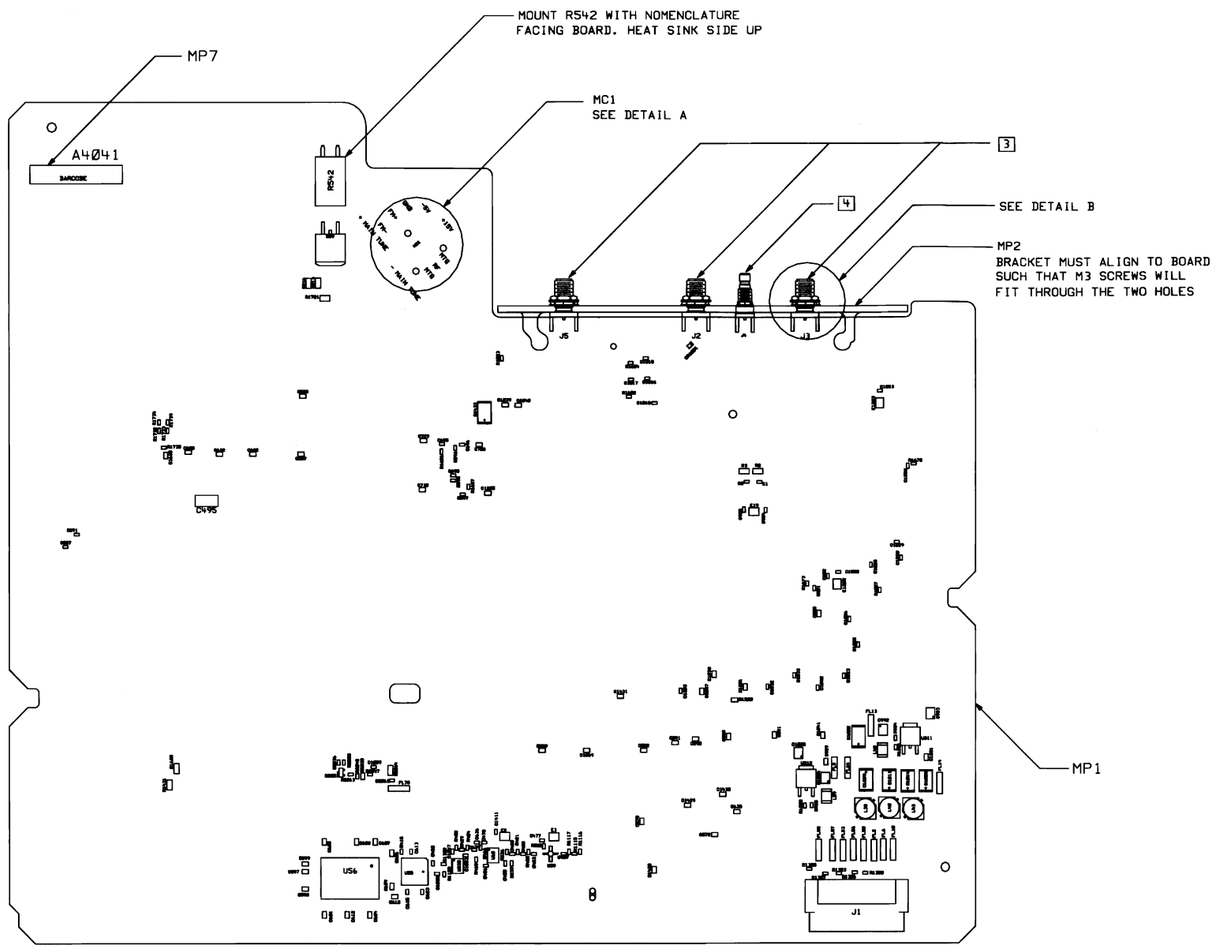

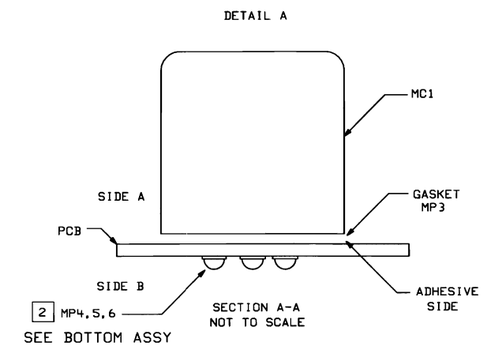

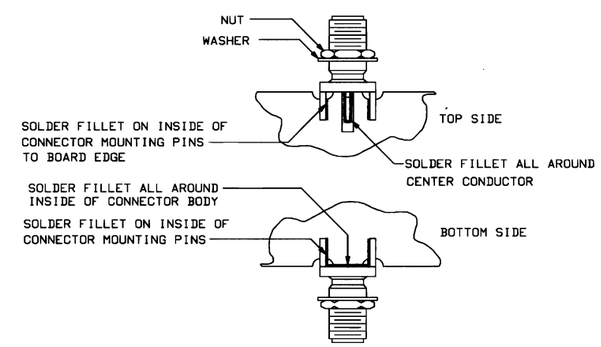

DETAIL B
SCALE NONE
2 PLACES

NOTES: UNLESS OTHERWISE SPECIFIED

1. USES RAW BOARD NUMBER E4403-20057
2. TORQUE MP4,5,6 INALTERNATING PATTERN TO: 5 IN-LBS.
3. TORQUE JAMNUTS OF CONNECTORS J2,3 & J5 TO:11 IN-LBS.
4. TORQUE JAMNUTS OF CONNECTORS J4 TO: 2 IN-LBS.
5. FL1-14,FL50-64,FL70-71,FL75-77 MUST NOT BE EXPOSED TO HALIDE-CONTANING ACID FLUXES.
6. THIS BOARD HAS .010 VIAS IN SMT PADS.
7. HATCHED COMPONENT ARE NOT LOADED AT THIS ASSEMBLY.

SEE MATERIAL LIST E4403-60057

TOP SIDE

AGILENT TECHNOLOGIES
RESTRICTED
THIS DOCUMENT CONTAINS CONFIDENTIAL, PROPRIETARY INFORMATION THAT IS AGILENT TECHNOLOGIES PROPERTY. DO NOT DISCLOSE TO OR DUPLICATE FOR OTHERS EXCEPT AS AUTHORIZED BY AGILENT TECHNOLOGIES.

UNLESS OTHERWISE SPECIFIED, DIMENSIONS ARE IN INCHES.
TOLERANCES: XX.XXX ±.010
XX.XX ±.02
THIRD ANGLE PROJECTION
DO NOT SCALE THIS DRAWING

DRAWN BY	DATE
ENGINEER/CHECKER	DATE
RELEASE TO PROD.	DATE
SUPERSEDES DWG.	

TITLE: ASSEMBLY, PWB RF BOTTOM

FILENAME: a1aer057
SCALE: NONE
SHEET 1 OF 2
PART NUMBER: E4403-60057
D-E4403-60057-2

IGNORE

S300	CA4041	D-E4403-60057-1

SYM	REVISIONS	APPROVED	DATE

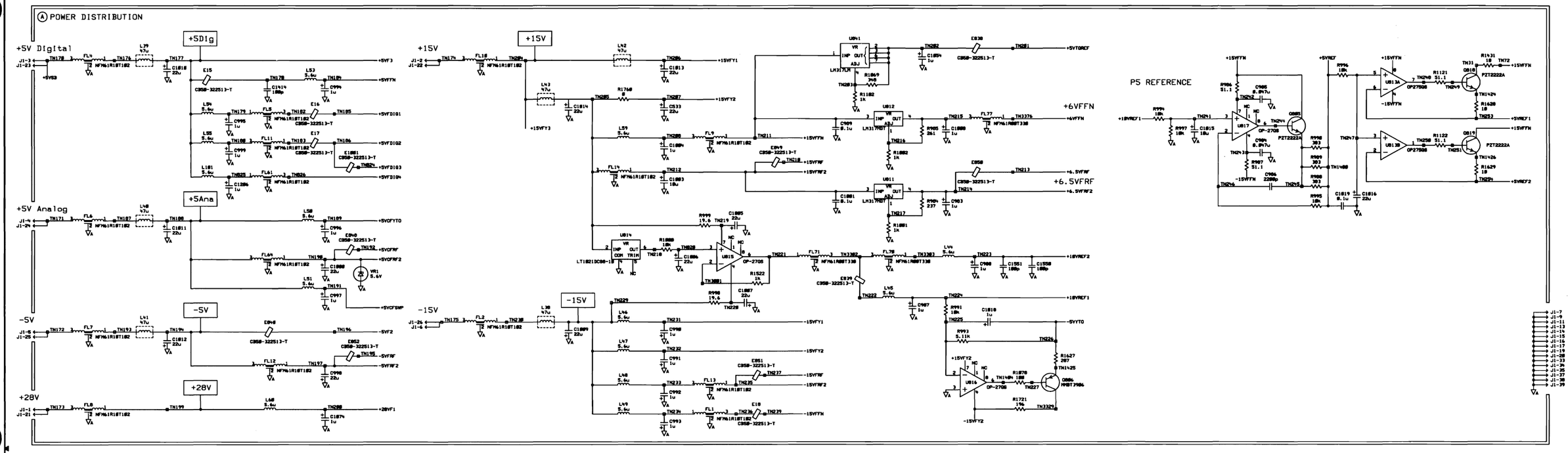

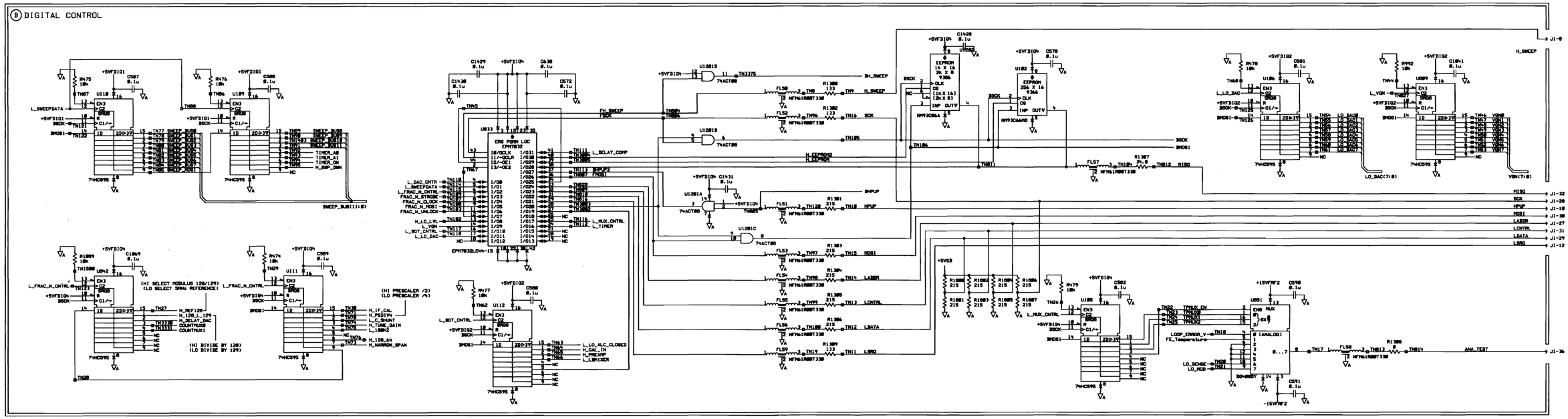

AGILENT TECHNOLOGIES RESTRICTED
THIS DOCUMENT CONTAINS CONFIDENTIAL, PROPRIETARY INFORMATION THAT IS AGILENT TECHNOLOGIES PROPERTY. DO NOT DISCLOSE TO OR DUPLICATE FOR OTHERS EXCEPT AS AUTHORIZED BY AGILENT TECHNOLOGIES.

DRAWN BY	DATE	SCHEMATIC, PWA RF BOTTOM	slaer057 FILENAME
ENGINEER/CHECKER	DATE		SCALE NONE
RELEASE TO PROD.	DATE		SHEET 1 OF 8
SUPERSEDES DWG.		TITLE	E4403-60057 PART NUMBER
			D-E4403-60057-1

Agilent

IGNORE

SYM	REVISIONS	APPROVED	DATE

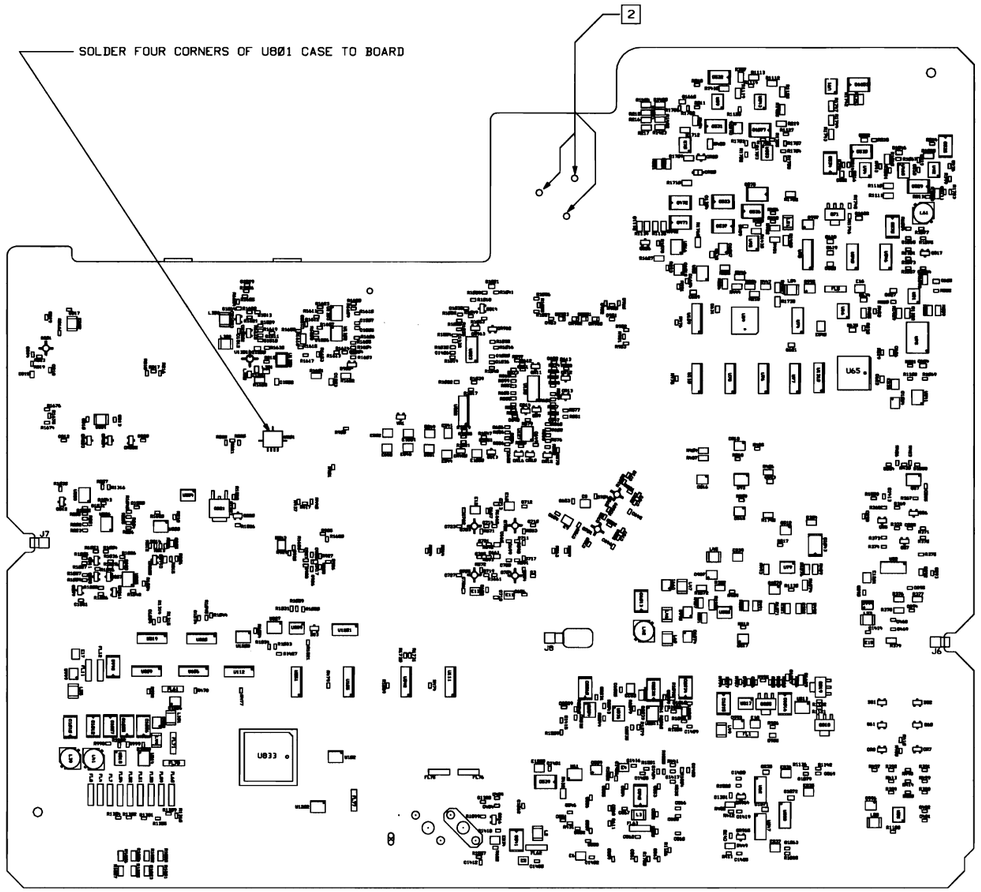

BOTTOM SIDE

AGILENT TECHNOLOGIES
RESTRICTED
THIS DOCUMENT CONTAINS CONFIDENTIAL, PROPRIETARY INFORMATION THAT IS AGILENT TECHNOLOGIES PROPERTY. DO NOT DISCLOSE TO OR DUPLICATE FOR OTHERS EXCEPT AS AUTHORIZED BY AGILENT TECHNOLOGIES.

UNLESS OTHERWISE SPECIFIED, DIMENSIONS ARE IN INCHES.
TOLERANCES: XX.XXX ±.010 XX.XX ±.02
THIRD ANGLE PROJECTION
DO NOT SCALE THIS DRAWING

DRAWN BY	DATE
ENGINEER/CHECKER	DATE
RELEASE TO PROD.	DATE
SUPERSEDES DWG.	

ASSEMBLY, PWB RF BOTTOM
TITLE

a6aer057 FILENAME
SCALE NONE
SHEET 2 OF 2
E4403-60057 PART NUMBER
D-E4403-60057-2

5300 CA4041 D-E4403-60057-1

SYM	REVISIONS	APPROVED	DATE

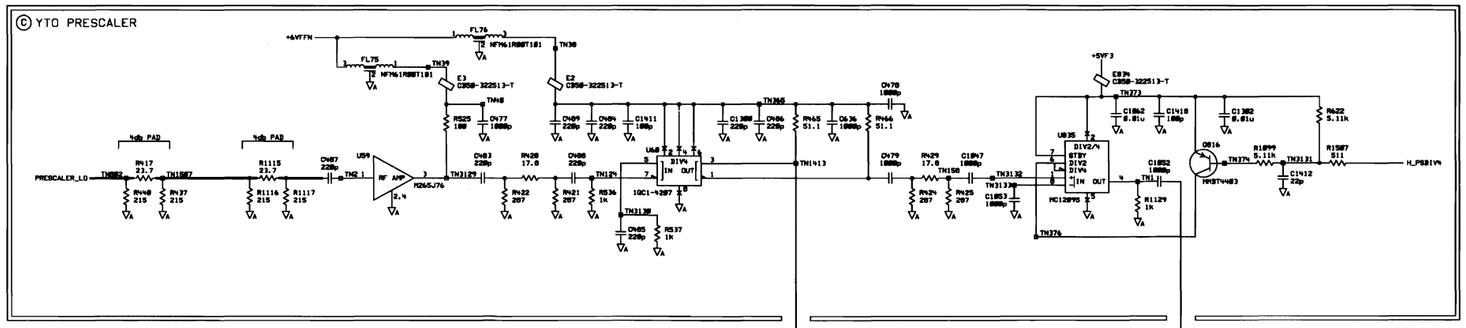

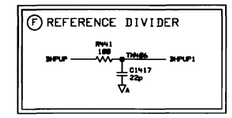

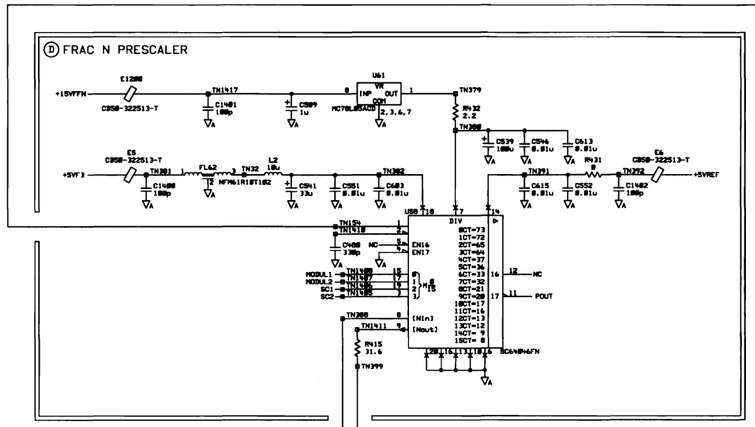

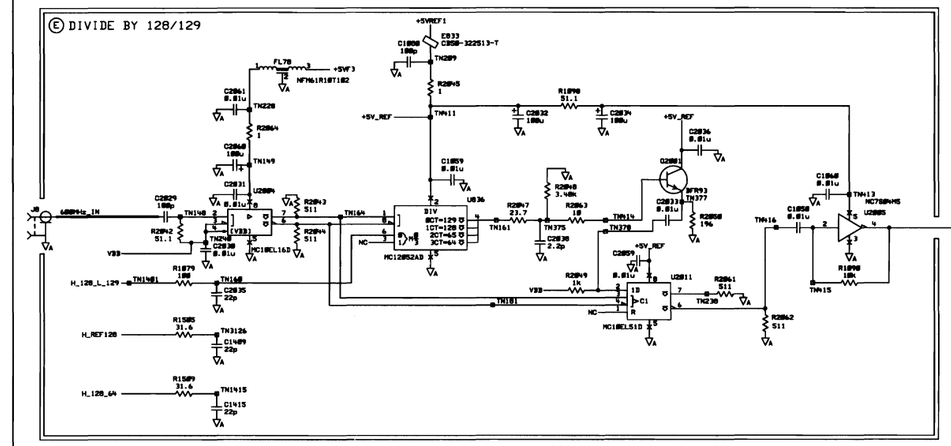

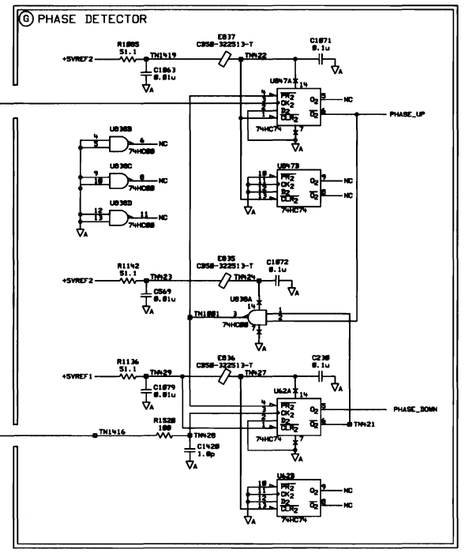

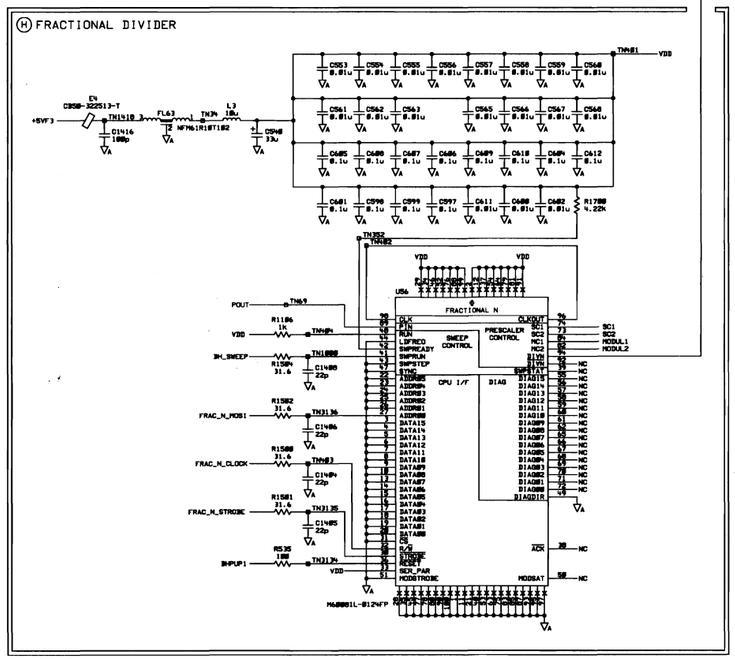

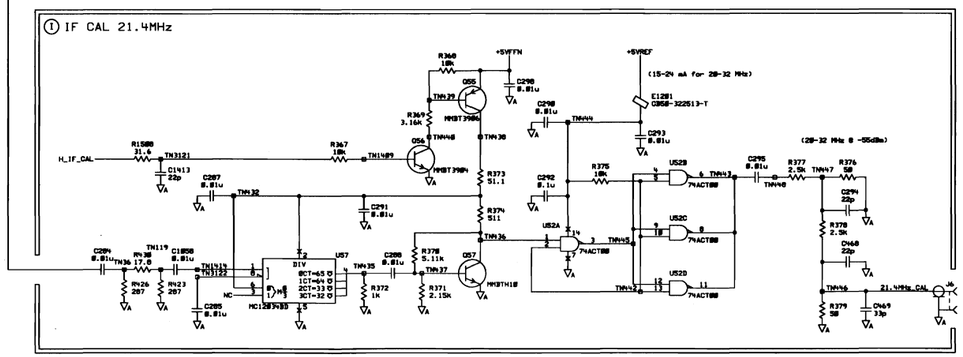

NOTES:

1. PARTS CROSSHATCHED ARE NO LOADS

AGILENT TECHNOLOGIES RESTRICTED
THIS DOCUMENT CONTAINS CONFIDENTIAL, PROPRIETARY INFORMATION THAT IS AGILENT TECHNOLOGIES PROPERTY. DO NOT DISCLOSE TO OR DUPLICATE FOR OTHERS EXCEPT AS AUTHORIZED BY AGILENT TECHNOLOGIES.

DRAWN BY	DATE	SCHEMATIC, PWA RF BOTTOM	s2aer057 FILENAME
ENGINEER/CHECKER	DATE		SCALE NONE
RELEASE TO PROD.	DATE		SHEET 2 OF 8
SUPERSEDES DWG.		TITLE	E4403-60057 PART NUMBER
			D-E4403-60057-1

IGNORE

SYM	REVISIONS	APPROVED	DATE

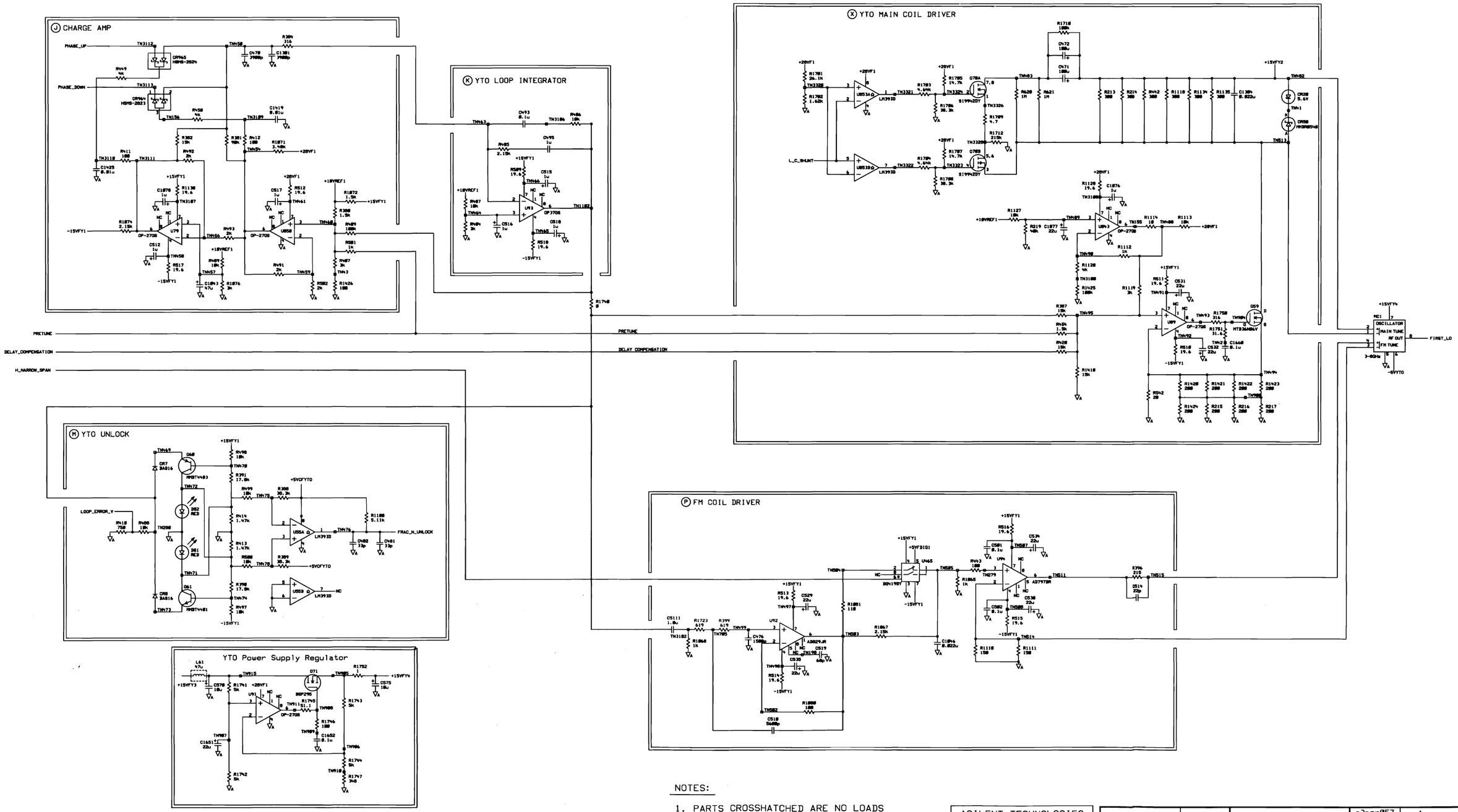

NOTES:

1. PARTS CROSSHATCHED ARE NO LOADS

AGILENT TECHNOLOGIES RESTRICTED
THIS DOCUMENT CONTAINS CONFIDENTIAL, PROPRIETARY INFORMATION THAT IS AGILENT TECHNOLOGIES PROPERTY. DO NOT DISCLOSE TO OR DUPLICATE FOR OTHERS EXCEPT AS AUTHORIZED BY AGILENT TECHNOLOGIES.

DRAWN BY	DATE	SCHEMATIC, PWA RF BOTTOM	s3aer057 FILENAME
ENGINEER/CHECKER	DATE		SCALE NONE
RELEASE TO PROD.	DATE		SHEET 3 OF 8
SUPERSEDES DWG.		TITLE	E4403-60057 PART NUMBER

D-E4403-60057-1

IGNORE

5300	CA4041	D-E4403-60057-1

SYM	REVISIONS	APPROVED	DATE

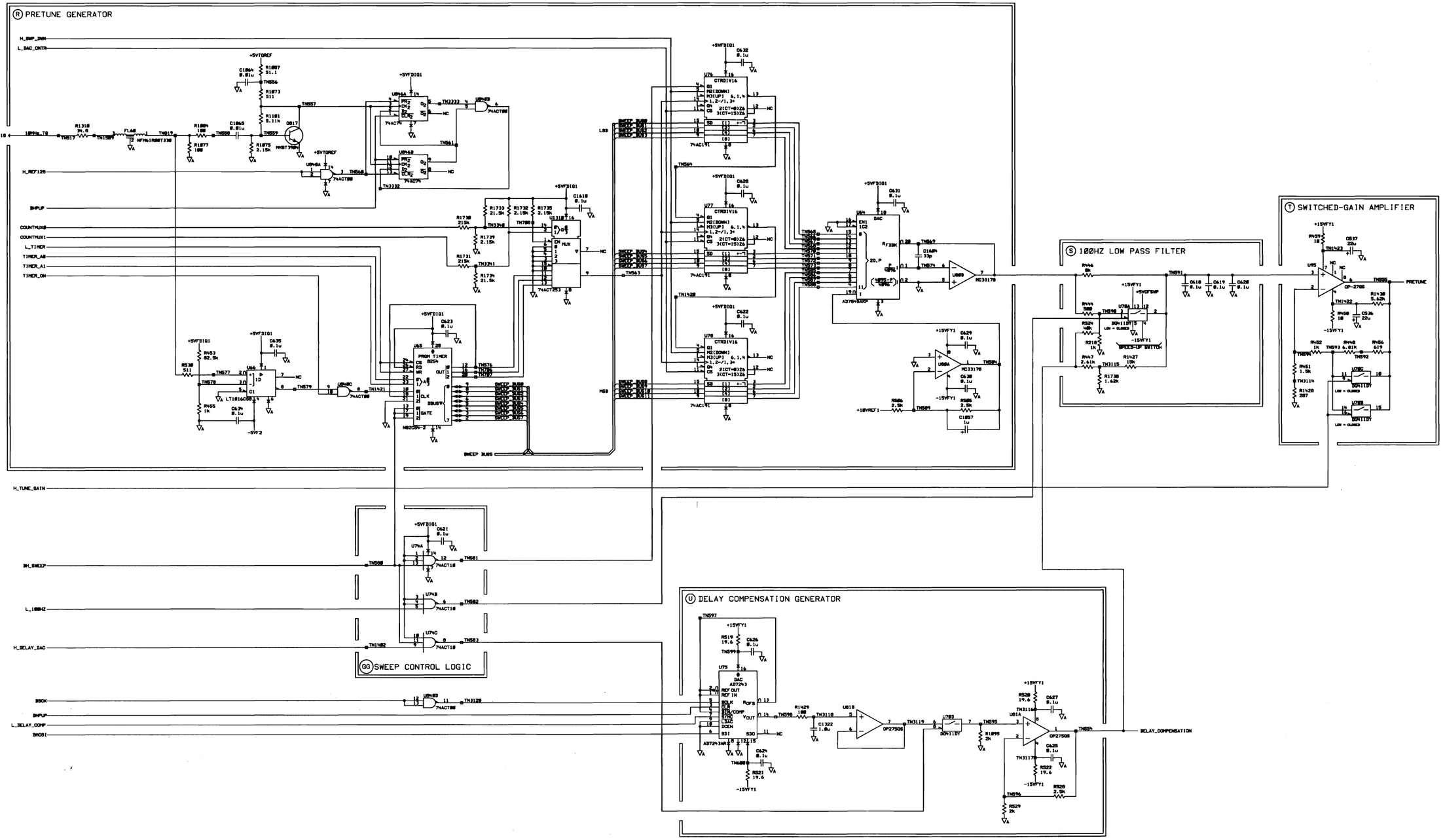

AGILENT TECHNOLOGIES RESTRICTED
THIS DOCUMENT CONTAINS CONFIDENTIAL, PROPRIETARY INFORMATION THAT IS AGILENT TECHNOLOGIES PROPERTY. DO NOT DISCLOSE TO OR DUPLICATE FOR OTHERS EXCEPT AS AUTHORIZED BY AGILENT TECHNOLOGIES.

DRAWN BY	DATE	SCHEMATIC, PWA RF BOTTOM	s4aer057 FILENAME
ENGINEER/CHECKER	DATE		SCALE NONE
RELEASE TO PROD.	DATE		SHEET 4 OF 8
SUPERSEDES DWG.		TITLE	E4403-60057 PART NUMBER

D-E4403-60057-1

IGNORE

SYM	REVISIONS	APPROVED	DATE

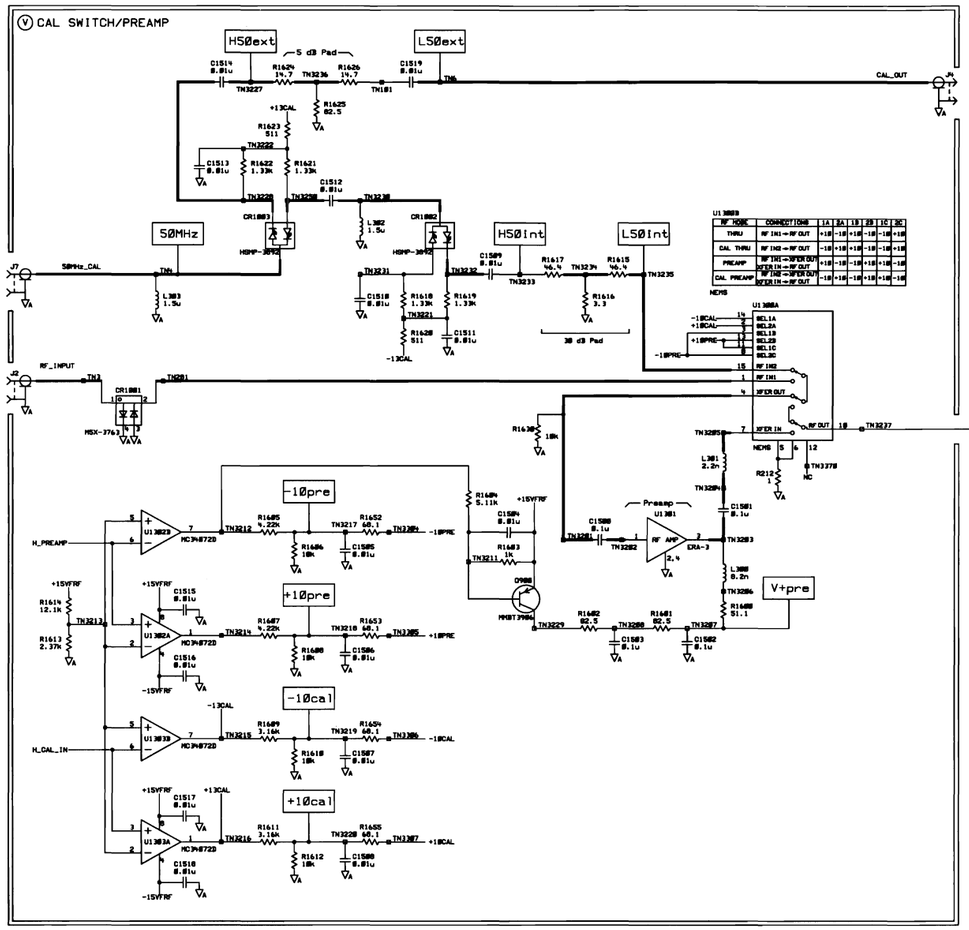

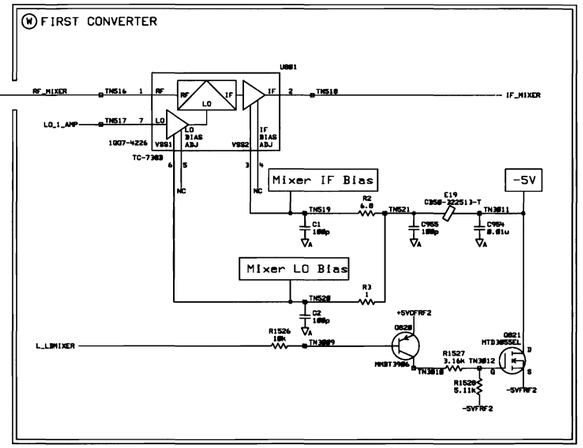

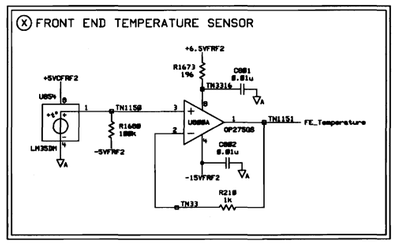

AGILENT TECHNOLOGIES
RESTRICTED
THIS DOCUMENT CONTAINS CONFIDENTIAL, PROPRIETARY INFORMATION THAT IS AGILENT TECHNOLOGIES PROPERTY. DO NOT DISCLOSE TO OR DUPLICATE FOR OTHERS EXCEPT AS AUTHORIZED BY AGILENT TECHNOLOGIES.

DRAWN BY	DATE	SCHEMATIC, PWA RF BOTTOM	sSaer057 FILENAME
ENGINEER/CHECKER	DATE		SCALE NONE
RELEASE TO PROD.	DATE		SHEET 5 OF 8
SUPERSEDES DWG.		TITLE	E4403-60057 PART NUMBER

D-E4403-60057-1

IGNORE

SYM	REVISIONS	APPROVED	DATE

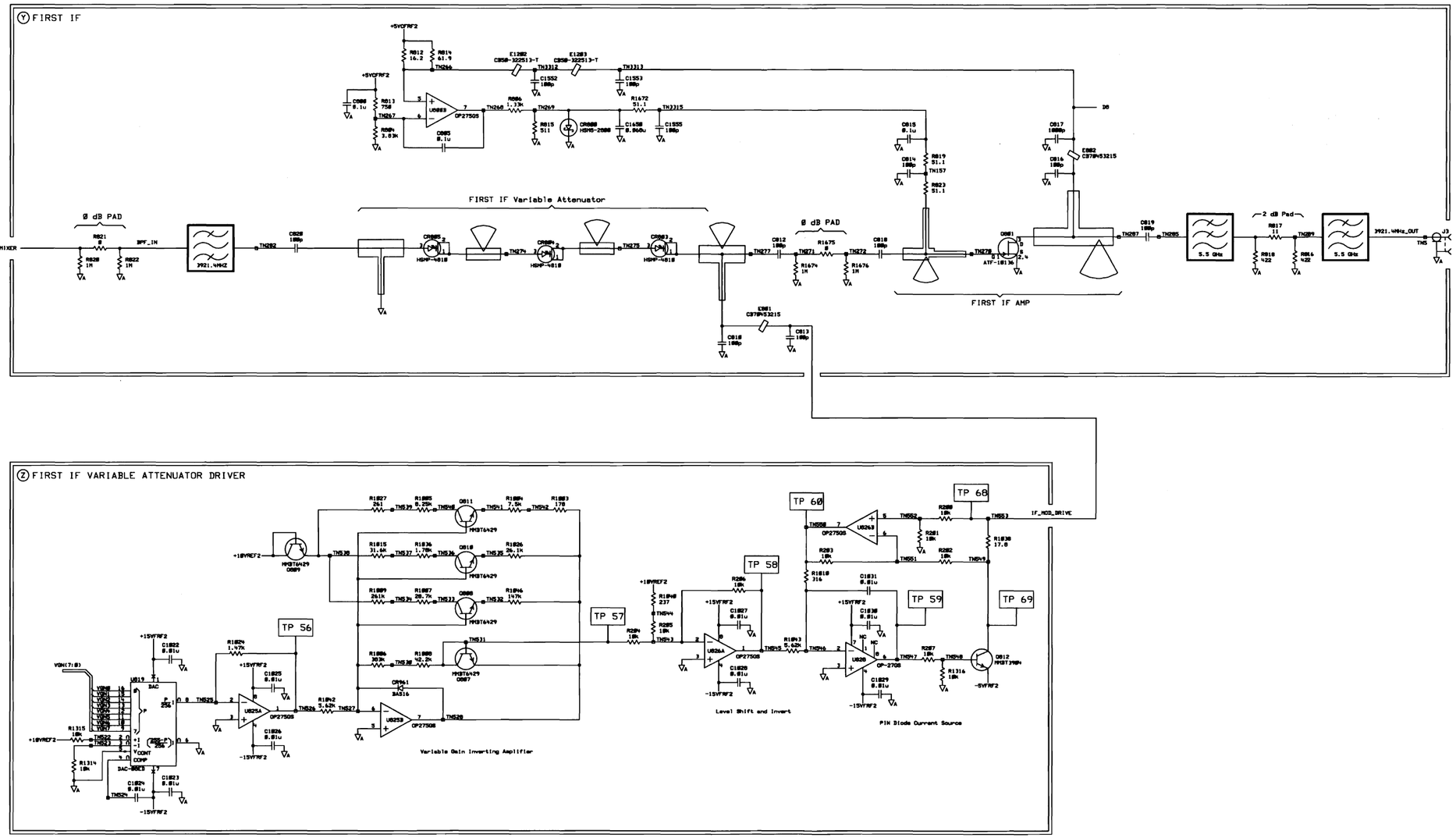

IGNORE

AGILENT TECHNOLOGIES
RESTRICTED
THIS DOCUMENT CONTAINS CONFIDENTIAL, PROPRIETARY INFORMATION THAT IS AGILENT TECHNOLOGIES PROPERTY. DO NOT DISCLOSE TO OR DUPLICATE FOR OTHERS EXCEPT AS AUTHORIZED BY AGILENT TECHNOLOGIES.

DRAWN BY	DATE	SCHEMATIC, PWA RF BOTTOM	s6aer057 FILENAME
ENGINEER/CHECKER	DATE		SCALE NONE
RELEASE TO PROD.	DATE		SHEET 6 OF 8
SUPERSEDES DWG.		TITLE	E4403-60057 PART NUMBER
			D-E4403-60057-1

Agilent

SYM	REVISIONS	APPROVED	DATE

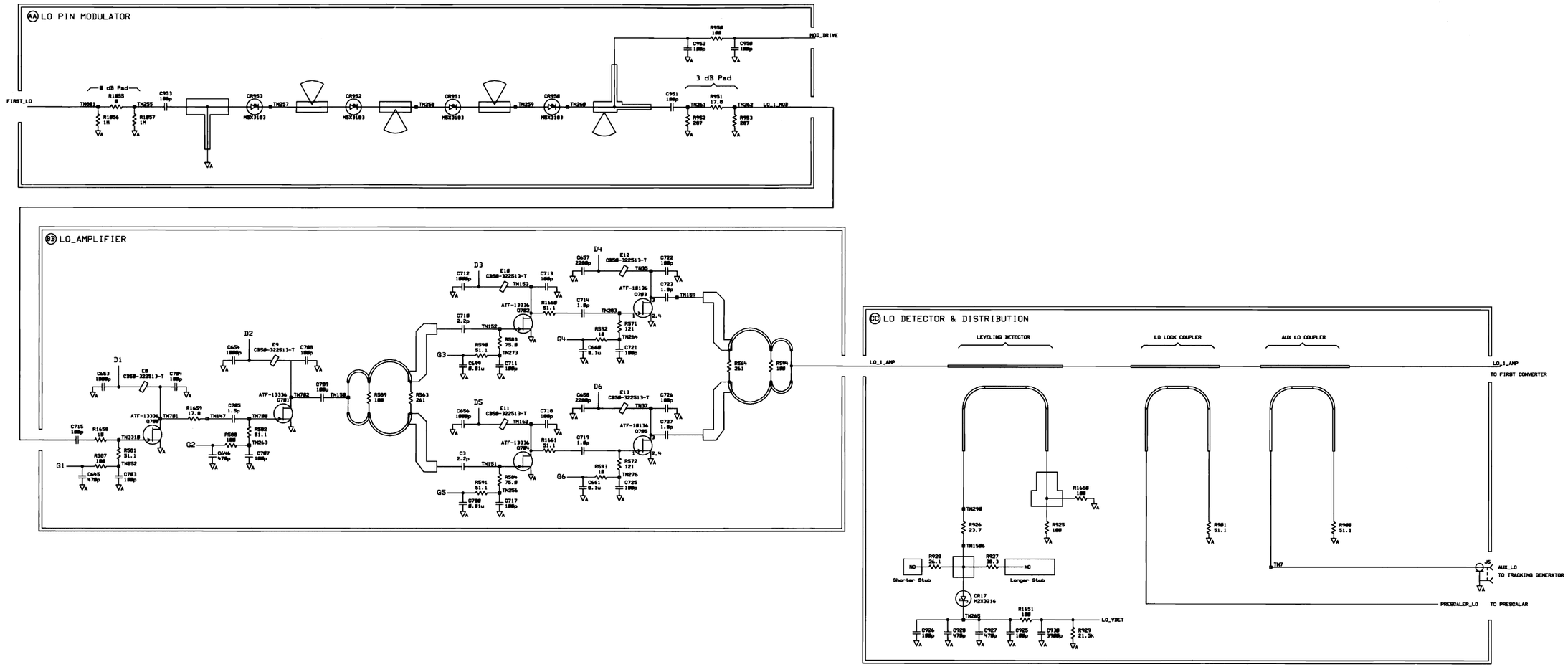

NOTES:

1. HATCHED COMPONENTS ARE NOT LOADED ON THIS ASSEMBLY

AGILENT TECHNOLOGIES RESTRICTED
THIS DOCUMENT CONTAINS CONFIDENTIAL, PROPRIETARY INFORMATION THAT IS AGILENT TECHNOLOGIES PROPERTY. DO NOT DISCLOSE TO OR DUPLICATE FOR OTHERS EXCEPT AS AUTHORIZED BY AGILENT TECHNOLOGIES.

DRAWN BY	DATE	SCHEMATIC, PWA RF BOTTOM	s7aer057 FILENAME
ENGINEER/CHECKER	DATE		SCALE NONE
RELEASE TO PROD.	DATE		SHEET 7 OF 8
SUPERSEDES DWG.		TITLE	E4403-60057 PART NUMBER

D-E4403-60057-1

IGNORE

5300 CA4041 D-E4403-60057-1

SYM	REVISIONS	APPROVED	DATE

DD LO AMP ALC

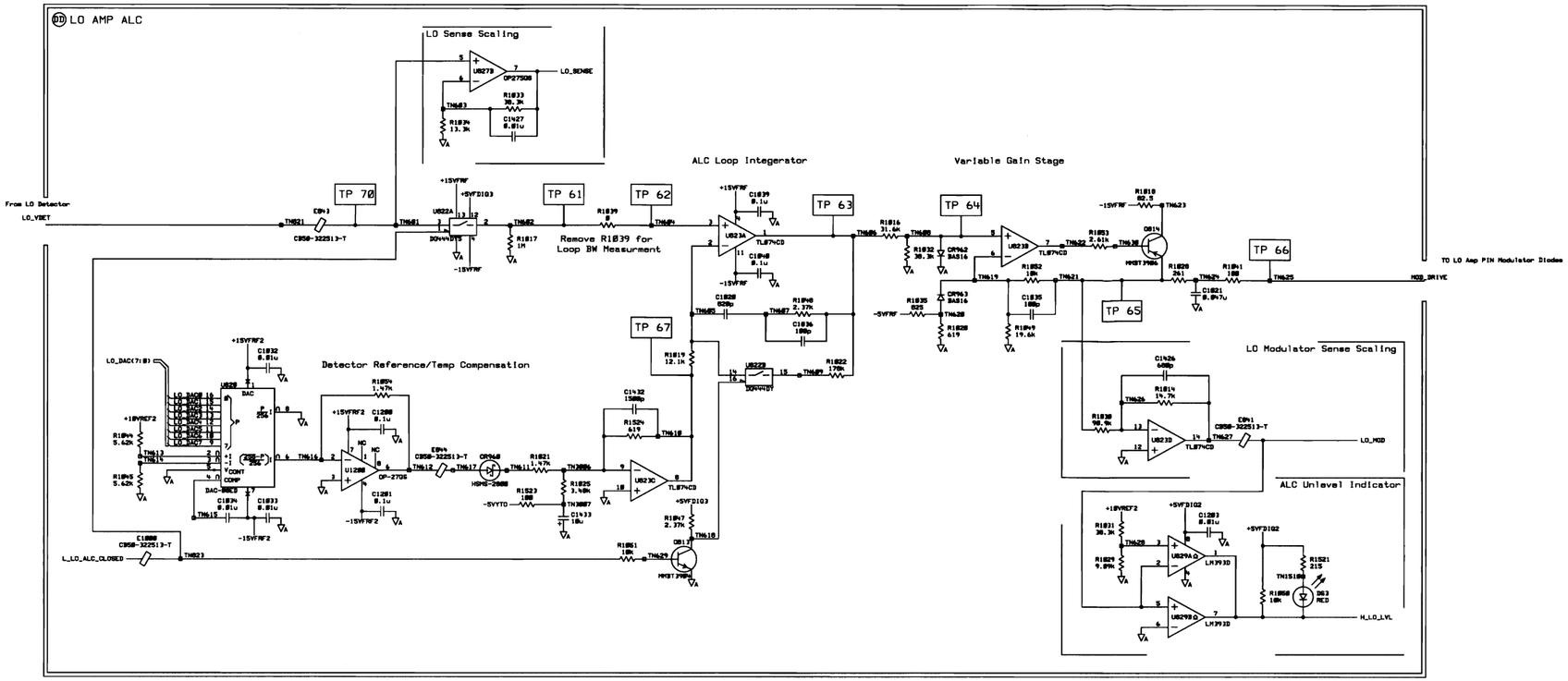

EE LO AMP BIAS

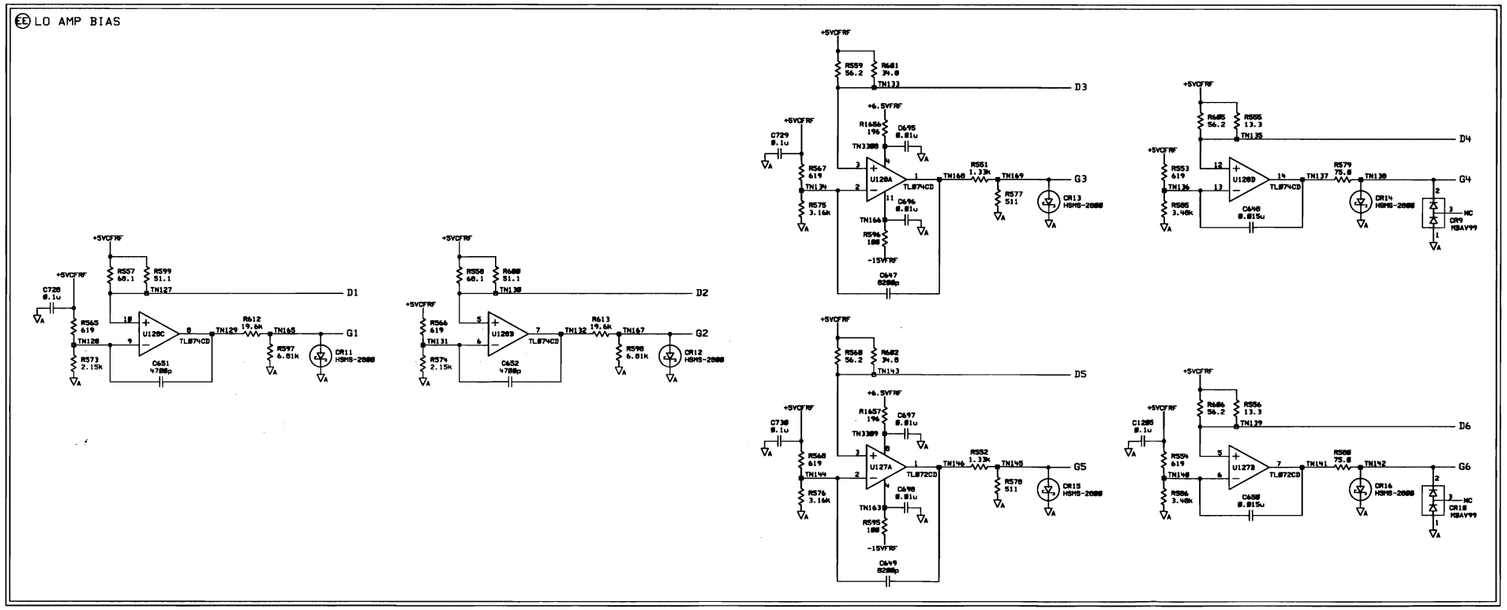

FF UNUSED PARTS

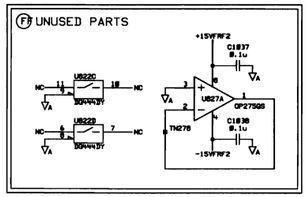

AGILENT TECHNOLOGIES
RESTRICTED
THIS DOCUMENT CONTAINS CONFIDENTIAL, PROPRIETARY INFORMATION THAT IS AGILENT TECHNOLOGIES PROPERTY. DO NOT DISCLOSE TO OR DUPLICATE FOR OTHERS EXCEPT AS AUTHORIZED BY AGILENT TECHNOLOGIES.

DRAWN BY	DATE	SCHEMATIC, PWA RF BOTTOM	s8aer057 FILENAME
ENGINEER/CHECKER	DATE		SCALE NONE
RELEASE TO PROD.	DATE		SHEET 8 OF 8
SUPERSEDES DWG.		TITLE	E4403-60057 PART NUMBER
			D-E4403-60057-1

IGNORE