HEWLETT PACKARD

OPERATING & SERVICE MANUAL

HP 37204A/B
HP-IB EXTENDER

SERIAL NUMBERS

This manual applies directly to instruments with serial numbers prefixed 2547U.

For additional important information about serial numbers, refer to INSTRUMENTS COVERED BY MANUAL in section I.

Manual Part Number: 37204-90003
Microfiche Part Number: 37204-90028

Printed: September 1987

SAFETY SUMMARY (Page 1)

Observe the following safety precautions during all phases of operation, service, and repair of this instrument. Failure to comply with these precautions or with specific warnings elsewhere in this manual violates safety standards of design, manufacture, and intended use of the Instrument. Hewlett-Packard Company assumes no liability for the customer's failure to comply with these requirements.

GROUND THE INSTRUMENT

To minimize shock hazard, the instrument chassis and cabinet must be connected to an electrical ground. The instrument is equipped with a three-conductor ac power cable which must be: plugged into an approved three-contact electrical outlet; or used with a three-contact to two-contact adapter with the grounding wire (green) firmly connected to an electrical ground (safety ground) at the power outlet. The power jack and mating plug of the power cable meet International Electrotechnical Commission (IEC) safety standards.

If the instrument is to be energized via an auto-transformer, make sure that the common terminal of the auto-transformer is connected to the neutral pole of the power source.

DO NOT OPERATE IN AN EXPLOSIVE ATMOSPHERE

Do not operate the instrument in the presence of flammable gases or fumes. Operation of any electrical instrument in such an environment constitutes a definite safety hazard.

KEEP AWAY FROM LIVE CIRCUITS

Operating personnel must not remove instrument covers. Component replacement and internal adjustments must be made by qualified maintenance personnel. Do not replace components with power cable connected. Under certain conditions, dangerous voltages may exist even with the power cable removed. To avoid injuries, always disconnect power and discharge circuits before touching them.

DO NOT SERVICE OR ADJUST ALONE

Do not attempt internal service or adjustment unless another person, capable of rendering first aid and resuscitation, is present.

DO NOT SUBSTITUTE PARTS OR MODIFY INSTRUMENT

Because of the danger of introducing additional hazards, do not install substitute parts or perform any unauthorized modification of the instrument. Return the instrument to a Hewlett-Packard Sales and Service Office for service and repair to ensure that safety features are maintained.

SAFETY SUMMARY (Page 2)

DANGEROUS PROCEDURE WARNINGS

Warnings, such as the example below, precede potentially dangerous procedures throughout this manual. Instructions contained in the warnings must be followed.

WARNING

DANGEROUS VOLTAGES, CAPABLE OF CAUSING DEATH, ARE PRESENT IN THIS INSTRUMENT. USE EXTREME CAUTION WHEN HANDLING, TESTING, AND ADJUSTING.

LIST OF CONTENTS

SECTION 1 GENERAL INFORMATION

Paragraph

1-1 INTRODUCTION . . . . . Page 1-1
1-2 MODELS COVERED 1-1
1-3 OPTIONS 1-1
1-4 SERIAL NUMBER/MANUAL CHANGES 1-2
1-5 SPECIFICATIONS 1-2
1-6 SAFETY CONSIDERATIONS 1-2
1-7 WARRANTY CONVERSION 1-3
1-8 EXTENDED WARRANTY 1-3
1-9 RECOMMENDED TEST EQUIPMENT 1-3

Table

1-1 RECOMMENDED TEST EQUIPMENT 1-3

SECTION 2 INSTALLATION

Paragraph

2-1 INTRODUCTION 2-1
2-2 INITIAL INSPECTION 2-1
2-3 AC LINE VOLTAGE 2-1
2-4 POWER CORD 2-1
2-5 RACK MOUNTING 2-1
2-6 PLANNING THE HP-IB EXTENDER CHAIN 2-2
2-6-1 Connection of HP-IB Devices to Extenders 2-2
2-7 SETTING SWITCHES 2-2
2-7-1 Front Panel POSITION Switch 2-2
2-7-2 Rear Panel Configuration Switches 2-2
2-8 CABLE LINK BETWEEN EXTENDERS 2-3
2-8-1 Coaxial Cable 2-3
2-8-2 Fiber Optic Cable 2-3

Paragraph

2-8-3 Cable Connection Between Extenders . . . . . Page 2-4
2-9 SYSTEM POWER UP 2-4
2-9-1 Continuous Monitoring of Link Integrity 2-4
2-9-2 In Case of Difficulty 2-4

Table

2-1 REAR PANEL CONFIGURATION SWITCHES 2-5

Figure

2-1 37204A/B HP-IB EXTENDER FRONT PANEL 2-0
2-2 37204A/B HP-IB EXTENDER REAR PANEL 2-0
2-3 37204A/B EXTENDER CONFIGURATIONS 2-5

SECTION 3 OPERATION

Paragraph

3-1 CONSIDERATIONS FOR OPERATION 3-1
3-1-1 Transparency 3-1
3-1-2 Extender is a Listen Always Device 3-1
3-1-3 Parallel Poll Response 3-1
3-2 TRUNCATION 3-2
3-3 DATA THROUGHPUT 3-3

Figure

3-1 TRUNCATION IN STAR NETWORKS 3-3

SECTION 4 PERFORMANCE VERIFICATION

Paragraph

4-1 INTRODUCTION 4-1
4-2 EQUIPMENT REQUIRED 4-1
4-2 COMPUTER HP-IB INTERFACES 4-1

Paragraph

4-4 TEST CONFIGURATION ..... Page 4-2
4-5 PERFORMANCE VERIFICATION PROGRAM 4-2

Figure

4-1 PERFORMANCE TEST TYPICAL CONFIGURATION 4-3

SECTION 5 ADJUSTMENTS
(None required)

SECTION 6 REPLACEMENT PARTS

Paragraph

6-1 INTRODUCTION 6-1
6-2 ORDERING INFORMATION 6-1

Table

6-1 EXCHANGE ASSEMBLY 6-1
6-2 REPLACEABLE PARTS 37204A/B MAIN LIST 6-2
6-3 REPLACEABLE PARTS ASSEMBLY A1 6-2
6-4 REPLACEABLE PARTS ASSEMBLY A2 6-5
6-5 REPLACEABLE PARTS ASSEMBLY A10 6-7

SECTION 7 MANUAL CHANGES

Paragraph

7-1 INTRODUCTION 7-1

SECTION 8 SERVICE

Paragraph

8-1 INTRODUCTION . . . . . Page 8-1
8-2 PREVENTIVE MAINTENANCE 8-1
8-3 FAULT ISOLATION 8-1
8-4 SAFETY REQUIREMENTS 8-2
8-5 RECOMMENDED TEST EQUIPMENT 8-2
8-6 REPAIR 8-2
8-7 CO-AXIAL CABLE REPAIR 8-2
8-8 FIBER OPTIC CABLE REPAIR 8-2
8-9 DESCRIPTION OF SELF TEST 8-3
8-9-1 Introduction 8-3
8-9-2 Co-Axial Ports 8-3
8-9-3 HP-IB Interface 8-3
8-9-4 Fiber Optic Interface 8-4

8-10 RUNNING SELF TEST 8-4
8-10-1 Testing the COAX Ports 8-4
8-10-2 Testing the Fiber Optic Ports 8-6

Figure

8-1 BLOCK DIAGRAM OF 37204A SHOWING SELF TEST LOOPBACK PATHS 8-5

Paragraph

G1 SYSTEM TROUBLESHOOTING 8-7
G1-1 FAULTY EXTENDER CHAIN OR HP-IB DEVICE? 8-7
G1-1-1 All Port FAULT LAMPS Off 8-7
G1-1-2 One or More PORT FAULT Lamps On 8-7
G1-2 TROUBLESHOOTING WITHIN THE EXTENDER CHAIN 8-8
G1-2-1 Background 8-8
G1-2-2 Locating The Faulty Extender or Cable Link 8-10

Figure

G1-1 LOCATING A TRUNCATING EXTENDER 8-8
G1-2 PORT FAULT LAMP INDICATIONS CAUSED BY INTERMITTENT ERRORS 8-9

Paragraph

G1-3 PORT FAULT LAMP INDICATIONS CAUSED BY A CONTINUOUS FAILURE . . . . . Page 8-11

Paragraph

G2 INSTRUMENT TROUBLESHOOTING 8-13
G2-1 DETERMINING WHICH ASSEMBLY IS FAULTY 8-13
G2-2 A1 ASSEMBLY REPLACEMENT PROCEDURE 8-16

Table

G2-1 A2 FIBER OPTIC ASSEMBLY: FIELD REPLACABLE PARTS 8-14

Figure

G2-1 ASSEMBLY RETAINING SCREWS 8-15

Paragraph

A1 HP-IB EXTENDER MAIN ASSEMBLY 8-17
A1-1 INTRODUCTION 8-17
A1-2 CIRCUIT DESCRIPTION 8-17
A1-3 TROUBLESHOOTING PROCEDURE 8-18

Table

A1-1 U10 HP-IB LOOPBACK TESTING SEQUENCE 8-20

Figure

A1-1 A1 COMPONENT LOCATION 8-22
A1-2 U10 PIN LOCATION 8-22
A1-3 A1 POWER SUPPLY 8-23
A1-4 A1 COMPONENT LOCATION 8-24
A1-5 U10 PIN LOCATION 8-24
A1-6 A1 EXTENDER LOGIC AND DRIVER/RECEIVERS 8-25

Paragraph

A2 FIBER OPTIC ASSEMBLY 8-27
A2-1 INTRODUCTION 8-27
A2-2 CIRCUIT DESCRIPTION 8-27
A2-3 TROUBLESHOOTING PROCEDURE 8-28

Table

A2-1 LOOPED BACK TEST SIGNALS . . . . . Page 8-29

Figure

A2-1 A2 COMPONENT LOCATION 8-32
A2-2 FIBER OPTIC DRIVER/RECEIVERS 8-33

Paragraph

A10 EXTENDED POWER FAIL ASSEMBLY 8-35
A10-1 INTRODUCTION 8-35
A10-2 CIRCUIT DESCRIPTION 8-35
A10-3 TROUBLESHOOTING PROCEDURE 8-35

Figure

A10-1 POWER FAIL TIMER 8-34
A10-2 A10 COMPONENT LOCATION 8-34

APPENDIX A

LINE VOLTAGE SELECTION A-1

Figure

A-1 LINE VOLTAGE AND FUSE SELECTION A-0

APPENDIX B

RACK MOUNTING 37024A/B EXTENDERS B-1
RACK MOUNTING WITH HP SYSTEM 2 CABINET PRODUCTS B-3

Figure

B-1 REMOVING THE FRONT PANEL TRIM B-0
B-2 INVERTING THE FRONT PANEL TRIM B-0
B-3 MOUNTING IN A 19 INCH RACK. B-2
B-4 SYSTEM 2 CABINET RACK MOUNTING. B-2

1

General Information

1-1 Introduction

This manual contains information to install, operate, test and service your 37204A/B HP-IB Extender. 37204A/B Extenders provide single-point and multi-point extension of the Hewlett Packard Interface Bus (HP-IB), and allow the distance between devices using this interface to be increased well beyond the limits imposed by direct HP-IB cabling.

HP-IB is Hewlett Packard's implementation of the IEEE 488 and IEC 625 Interface standards.

1-2 Models Covered

This manual covers the 37204A including options 001, 002, and the 37204B. Functionally, the only difference between the 37204A and 37204B is that the 37204B's power fail reset lasts approximately 1.5s compared with less than 0.1s for the 37204A. The extended reset of the 37204B is required by certain supported configurations of HP 3000 computers to ensure proper power fail recovery in the event of a momentary power loss.

Unless specifically stated otherwise, the information in this manual applies to both the A and B versions of the 37204 HP-IB Extenders.

1-3 Options

Options 001 and 002 add fiber optic capability to the 37204A. Fiber optic cable removes the metallic connection between Extenders, providing complete electrical isolation. Typical benefits are: excellent lightning protection out of doors; and the avoidance of sparks in explosive environments.

Option 001 - Adds fiber optic capability to Port A.
Option 002 - Adds fiber optic capability to Ports A and B.

Note : Options 001 and 002 are not available on the 37204B.

1-4 Serial Number/Manual Changes

Attached to the rear of the 37204A/B is a serial number plate. The first 4 digits and the letter are the serial number prefix, and are changed only when a change is made to the Extender. The remaining digits are assigned sequentially and are unique to each Extender. The title page of this manual lists the serial prefixes of the Extenders covered. Extenders manufactured after the printing of this manual may have a serial prefix that is not listed on the title page. In this case, the manual is accompanied by a Manual Change which documents the differences between the Extender and this manual.

1-5 Specifications

Maximum Distance:	1250 meters per link, coax or fiber optic.
Maximum Speed:	60k bytes/s.
Power Requirements:	100/120/220/240 Volts ac +5/-10%. 48 to 66Hz. 10VA max.
Temperature Ranges:	0°C to 55°C (Operating). -40°C to 75°C (Storage).
Dimensions:	Height 71mm, width 212mm, depth 254mm
Weight:	1.72kg.

1-6 Safety Considerations

WARNING

TO PREVENT PERSONAL INJURY, OBSERVE ALL SAFETY PRECAUTIONS AND WARNINGS STATED ON THE INSTRUMENT AND IN THIS MANUAL.

The 37204A/B is a safety class 1 instrument, designed and tested according to international safety standards. It is provided with a protective ground (earth) terminal. A Safety Summary page at the beginning of this manual provides general safety information.

1-7 Warranty Conversion

Option W03 converts the standard 12-month bench warranty (see inside of front cover) into a 90-day on-site warranty. Contact your nearest Hewlett-Packard office for details of the conversion and if it is available in your country.

1-8 Extended Warranty

Option W30 extends the standard, return-to-HP, 12-month bench warranty for a further 2 years.

1-9 Recommended Test Equipment

Equipment required to service the 37204A is listed in Table 1-1. Other equipment may be substituted if it meets or exceeds the critical specifications listed in the table.

Table 1-1 Recommended Test Equipment

Instrument	Critical Specifications	Recommended Model	Use*
Oscilloscope	100MHz bw	HP 1740A	T
Frequency Counter	Frequency range 10Hz to 30MHz	HP 5382A	T
Digital Multimeter	±0.1V at ±5V	HP 3435A	T
Desktop Computer configured with BASIC 2.0 or above	Unique	HP 9000 Ser 200/300	P
Interface Card	Unique	HP 98624A	P
Functional Test Disc (Basic)	Unique	HP 37204-10001	P
Logic Probe	TTL Compatible	HP 545A	T

* A = Adjustments, P = Performance Tests, T = Troubleshooting

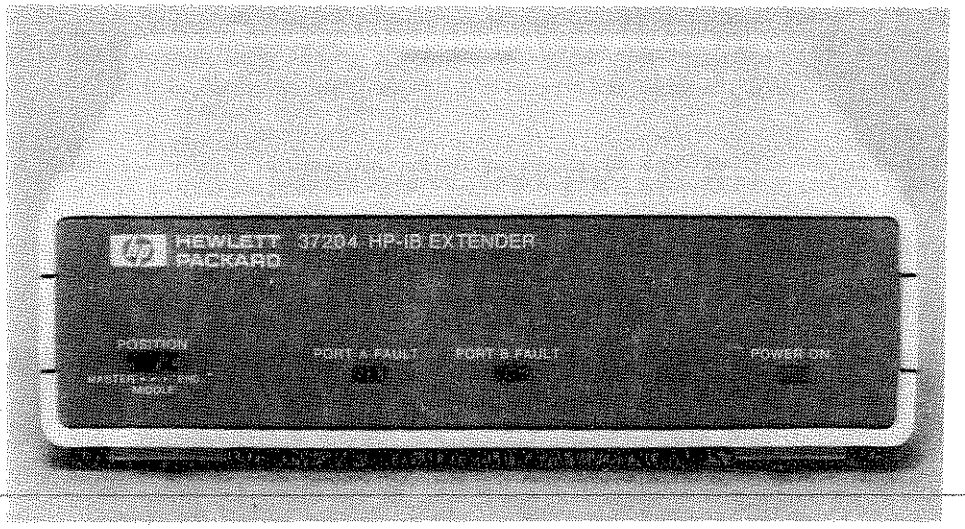

Figure 2-1 37204A/B HP-IB Extender Front Panel

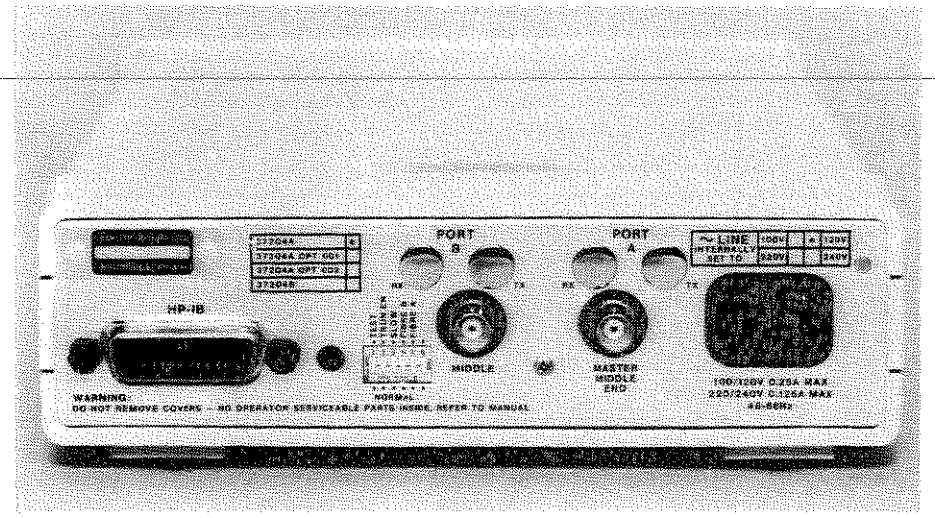

Figure 2-2 37204A/B HP-IB Extender Rear Panel

2

Installation

2-1 Introduction

Procedures for the installation of your 37204A/B HP-IB Extender are given in this section. If any difficulty is encountered, contact your nearest Hewlett Packard office.

2-2 Initial Inspection

Your Extender was carefully checked before dispatch and was shipped in a purpose-designed carton. However, if the carton shows obvious signs of damage, check the contents for completeness (see Installation Sheet 37204-90001) and/or damage. If there is any damage or missing parts, retain the shipping carton for the carrier's inspection and inform your nearest Hewlett Packard office immediately. The Hewlett Packard office will arrange for repair or replacement of your Extender without waiting for the settlement of any claim against the carrier.

2-3 AC Line Voltage

This is marked above the power cord inlet and should match the destination specified in your order. To reset, see Appendix A.

2-4 Power Cord

If the cord supplied is not suitable, get a replacement from your nearest HP office.

2-5 Rack Mounting

See Appendix B.

2-6 Planning the HP-IB Extender Chain

- Install an Extender at each node where HP-IB devices are clustered.
- Locate the controller at any convenient node (but see para 3-2 if truncation is enabled).
- Maximum length of cable per link is:

Fiber optic	: 1250 meters (4000 ft)
Coax (NORMAL mode)	: 250 meters (800 ft)
Coax (SLOW speed)	: 1250 meters (4000 ft)

- Extra long links: insert Extenders (with no HP-IB devices attached) at intermediate positions, keeping the max. length between nodes as above.
- An Extender chain can contain up to 30 Extenders.

2-6-1 Connection of HP-IB Devices to Extenders

- Maximum number of HP-IB devices at each Extender site: 14.
- Total length of HP-IB cable at each site: less than or equal to 2m (6.6 ft) times the number of directly connected devices, subject to a maximum length of 20m (65.6 ft).
- HP-IB interconnecting cable:

Length	Part Number
0.5m	HP 10833D
1m	HP 10833A
2m	HP 10833B
4m	HP 10833C

2-7 Setting Switches

2-7-1 Front Panel POSITION Switch

If there are only two Extenders in the chain, set one to MASTER and the other to END. If there are more than two, set the in-between Extenders to MIDDLE.

2-7-2 Rear Panel Configuration Switches

These switches set the operating configuration. The rightmost switch is unused.

Table 2-1 Rear Panel Configuration Switches

TEST	Set to NORMAL position. TEST position runs Extender self test at power up.
TRUN.EN	Set to TRUN.EN if HP-IB truncation feature is wanted (see para 3-2).
SLOW	Sets the speed of the serial data link between Extenders. Select SLOW at all Extenders if any coaxial link exceeds 250m.
FIBER A	Set to FIBER A (up) if using fiber at PORT A. Set to NORMAL (down) if using coax at PORT A.
FIBER B	Set to FIBER B (up) if using fiber at PORT B. Set to NORMAL (down) if using coax at PORT B.

2-8 Cable Link Between Extenders

2-8-1 Coaxial Cable

- Specification : Impedance: 75 ohm
  Loss per 100 meter: 6.9 dB at 100MHz
  Connector: 75 ohm BNC

  Belden 9248 with Trompeter UPL 20-41 connectors are suitable.
- Higher loss cable is OK if the total attenuation does not exceed,
  17.25dB @ 100 MHz for NORMAL speed
  86.25dB @ 100 MHz for SLOW speed.
- The effect of splices can usually be ignored.

2-8-2 Fiber Optic Cable

- HP supply duplex cable with HFBR 4000 connectors fitted.
  For lengths up to 100m, order:
  1m: 39201B 5m: 39202B 10m: 39203B 30m: 39204B 50m: 39205B 100m: 39206B
  For lengths over 100m, contact your local Hewlett Packard office.
- Splices introduce a loss equivalent to about 200m of cable.
- The 1250m maximum length includes an allowance for a single splice (for repair of a damaged cable).

2-8-3 Cable Connection Between Extenders

Cable only to PORT A for MASTER and END Extenders. Cable as you please to PORT A and B for MIDDLE Extenders. (MASTER, END and MIDDLE are defined by the setting of the POSITION switch.)

Note: **Coax serves as a 2-way path so only one connector per port. Fiber requires separate go and return paths so two connectors per port.**

CAUTION

To avoid damaging the fiber optic components,
- screw the optical connectors down only figertight (0.05 to 0.1Nm).
- avoid rotating the barrel on the connector as you tighten (or release) the connector.

2-9 System Power Up

2-9-1 Continuous Monitoring of Link Integrity

Once powered up, the Extenders communicate with each other even with no HP-IB devices connected. Observe the PORT FAULT lamps. The lamps blink once during power up then remain off thereafter provided communication between Extenders is without error.

2-9-2 In Case of Difficulty

If you encounter a problem (either with the link or with HP-IB operation), disconnect each Extender from the system and run self test (para 8-9 and 8-10). Self test is thorough but takes hardly any time to run.

Test the coaxial interfaces first (para 8-10-1) because this also tests the extender circuitry. If you do not have a loopback cable (5061-2694) to test the fiber optic interfaces, check, when powered up, that both PORT FAULT lamps are off, confirming that the fiber interfaces and the fiber optic links are working correctly.

SINGLE POINT EXTENSION

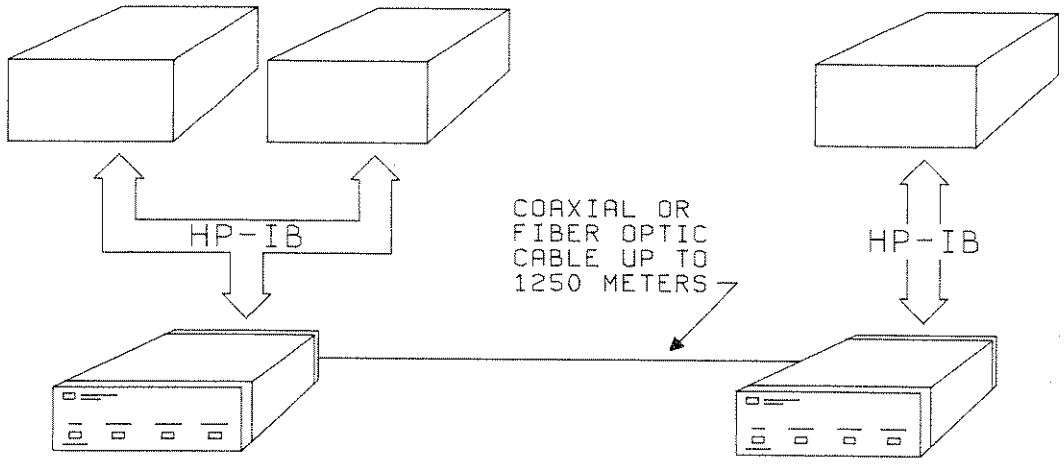

MULTI-DROP EXTENSION

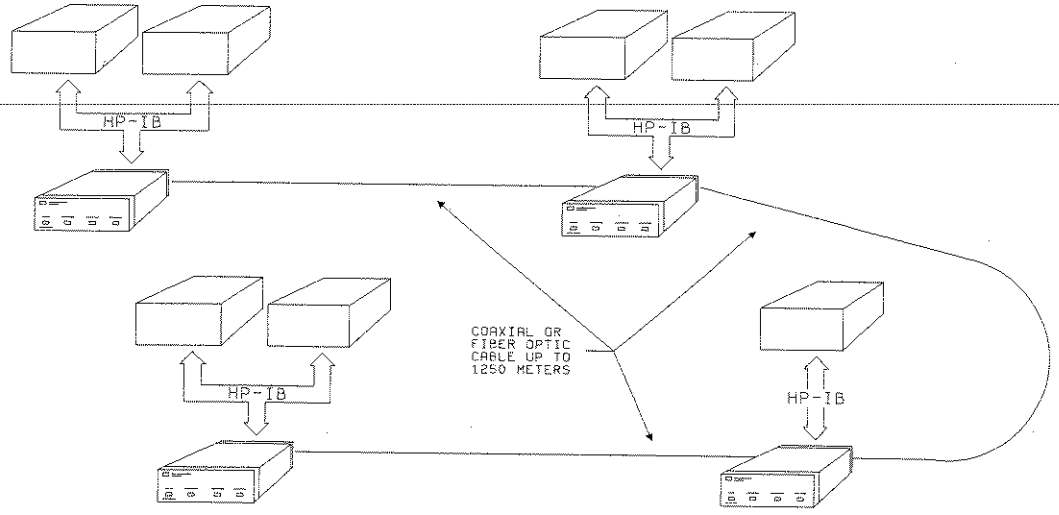

Figure 2-3 37204A/B Extender Configurations

3

Operation

3-1 Considerations for Operation

3-1-1 Transparency

The 37204A/B supports all HP-IB devices which comply with IEEE 488-1978.

Note: For remote devices, the Extenders may slow the response to a parallel poll, see para 3-1-3.

If you find that HP-IB devices work without Extenders but not with Extenders, suspect non compliance of a device or a software error, eg a timeout too short.

Once installed, extenders operate automatically and transparently. Usually,
- programs can remain unchanged.
- performance is no different from a directly-connected system.

3-1-2 Extender is a Listen Always Device

Data from a talker reaches all sites in the extended system even though there are no addressed listeners.

3-1-3 Parallel Poll Response

Transmission delays in the extended network increase the response to parallel polling beyond the 2 us specified in IEEE-488. (The response of devices on the controller's local bus is not affected.)

Factors adding to response time	NORMAL speed	SLOW speed
First Extender link	add 22 us	add 220 us
Each additional link	add 24 us	add 240 us
Propagation delay in the cabling :coax	add 1.7 us per 100m	
:fiber	add 2.0 us per 100m	

3-2 Truncation

Truncation is selected on the rear panel (see Table 2-1) and allows a partial HP-IB system to continue operating even with a failed Extender link. Without truncation, loss of communication between Extenders hangs the entire network because Extenders handshake every HP-IB transaction at all nodes.

The controller triggers truncation of a failed link by asserting IFC. Any Extender (with truncation enabled) which does not see messages being echoed back truncates the chain at the failing port (in the direction away from the master). Truncation remains active until the next time IFC is asserted at which time the echo check is repeated.

Note: Only communication loss between Extenders causes truncation and not HP-IB hang-ups or loss of power in any HP-IB device.

If the failed link recovers, the controller can remove truncation but only by asserting IFC as many times as there are Extenders in the chain. Assertions must be separate by the following minimum delays:
NORMAL speed: 2 ms; SLOW speed: 20 ms; fiber link: 3s.

Truncation enabled only at the master Extender always truncates the chain at the master. Truncation may also be enabled at all Extenders but, in this case, **fiber links are not allowed.**

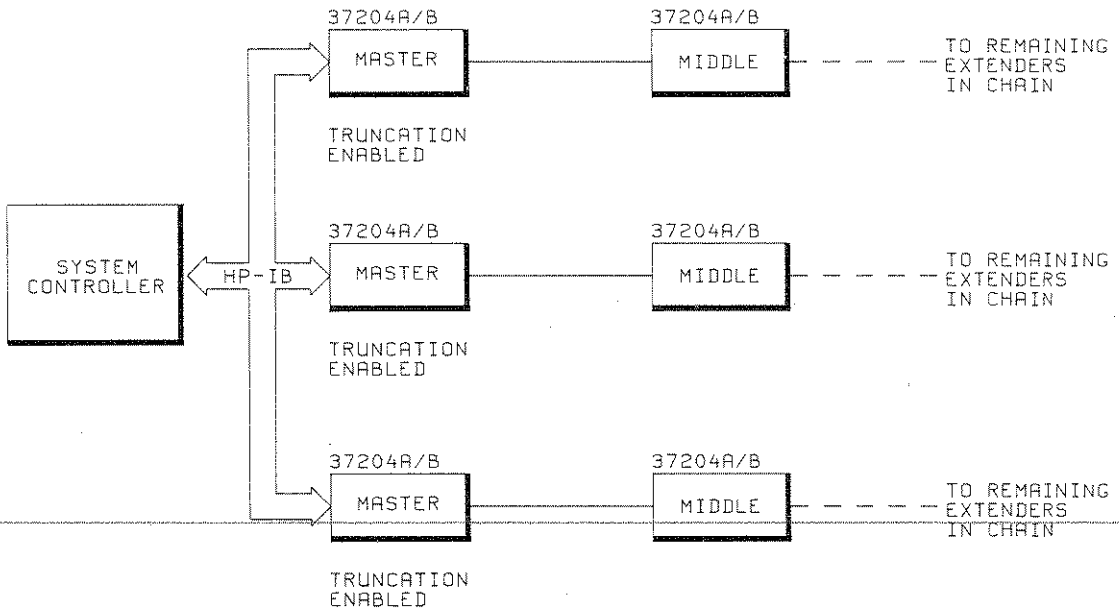

Without truncation, failure in an Extender chain hangs everything. With truncation, the failing chain is truncated at the master Extender, allowing the rest of the system to operate normally.

Figure 3-1 Truncation in Star Networks

3-3 Data Throughput

The maximum data transfer rate of an HP-IB Extender network is difficult to calculate with precision. It depends, for example, on the response times of the devices in the system, the number of Extender nodes and the distance between nodes. Some points:

1. Each Extender link increases the handshake time for a single byte by approximately 16us (NORMAL speed) or 160us (SLOW speed).

2. The delay introduced by the cabling between Extenders is calculated at 0.017us/meter for co-axial cable and 0.020us/meter for fiber optic cable.

3. To predict the data rate in an extended system, find the time required to handshake a single byte in the un-extended system and add to this the additional time introduced by the Extenders and cabling. (The rate of the extended system is then the inverse of this sum.)

Example 1

Two devices with a data transfer rate of 50,000 bytes/s are connected via a pair of HP 37204A/B Extenders and 200 meters of co-axial cable.

Time required for single byte transfer without Extenders	= 1/50,000 s
	= 20us
Data transfer time of the Extenders	= (16 x 1) + (0.017 x 200)us
	= 19us
Total data transfer time	= 19 + 20us
	= 39us
Therefore predicted transfer data rate	= $1/39 \times 10^{-6}$ bytes/s
	= 25k bytes/s, approximately.

Example 2

Data Transfer rate in an "un-extended" system is 20,000 bytes/s. The system is extended by means of 4 chained Extenders. The combined length of cable between Extenders is 250 meters.

Time required for a single byte transfer without Extenders	= 1/20,000 s
	= 50us

Data transfer time of the Extenders	=	(16 x 3) + (0.017 x 250)us
	=	52.25us
Total data transfer time	=	50 + 52.25us
	=	102.25us
Therefore predicted transfer data rate	=	$1/102.25 \times 10^{-6}$ bytes/s
	=	10k bytes/s, approximately.

Note: In some instances, the handshake time contributed by a device is itself influenced by the speed of the devices in the system.

4

Performance Verification

4-1 Introduction

The performance verification test described in this section checks out a 37204A/B Extender chain to ensure that it is capable of providing transparent HP-IB extension.

Note : Self test is thorough and easy to use. For most purposes, it is an adequate check on the 37204A/B, making the performance tests detailed in this section unnecessary. See paras 8-9 and 8-10.

4-2 Equipment Required

1. 37204A/B Extender chain under test.
2. HP 9000 Series 200/300 computer configured with BASIC 2.0 or above and,
   Internal HP-IB Interface
   HP98624A HP-IB Interface Card
3. Test program (available on a 3 1/2 inch floppy disc, HP Part No. 37204-10001).

4-3 Computer HP-IB Interfaces

The computer requires two separate HP-IB Interfaces configured as follows:

	Interface 1	Interface 2
Select Code:	7	8
HP-IB Address:	21	22
System Controller:	ON	OFF

4-4 Test Configuration

Run the performance test to verify either single point HP-IB extension (two 37204A/Bs), or multi-point HP-IB extension (three or more 37204A/Bs). 37204As and 37204Bs are functionally similar and an Extender chain may contain both types of Extender.

1. Cable the 37204A/B Extenders together using co-axial or fiber optic cable as appropriate. Connect to the master and end Extenders at their A PORTs. It does not matter which way around the cable connections are made to the middle Extenders.

2. Set the front panel POSITION switches to MASTER, END and MIDDLE as appropriate.

3. Set all the rear panel switches to NORMAL. If fiber optic cable is used, set the appropriate rear panel switches to FIBER.

4. Power up the Extenders and check that all POWER lamps are illuminated and that all PORT FAULT lamps are off. If a PORT FAULT lamp is on at any Extender, check for a faulty Extender or cable link (refer to Section 8).

5. Connect the computer HP-IB interface with select code 7 (System Controller) to the master 37204A/B.

6. Connect the other HP-IB interface to any other 37204A/B in the chain. It does not matter if some Extenders in the chain are not connected to an HP-IB device.

4-5 Performance Verification Test Program

The program name is P203/4. Run the program to get instructions.

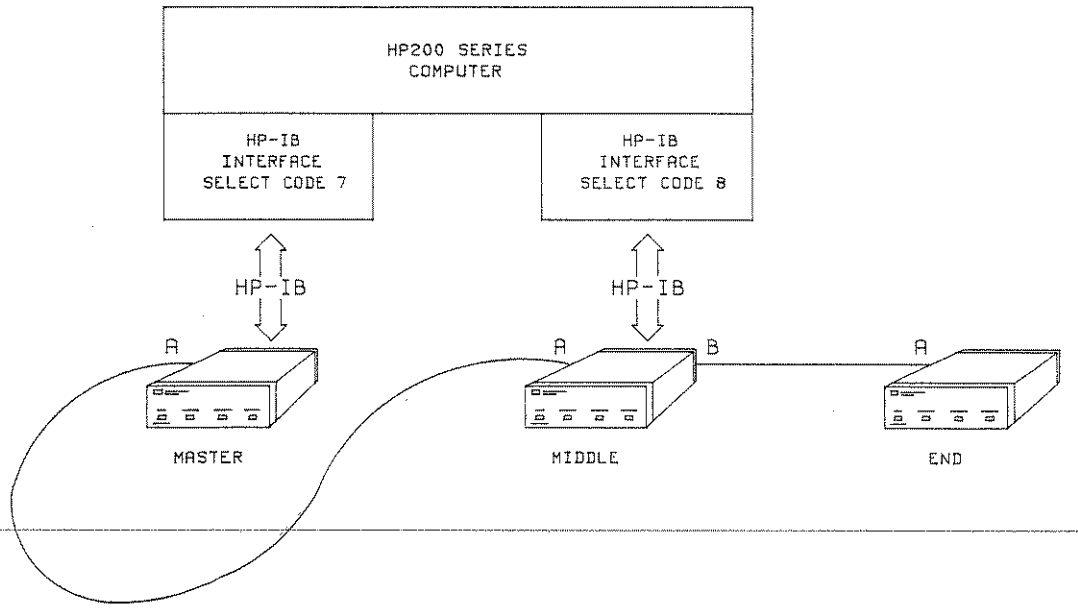

Figure 4-1 Performance Test Typical Configuration

5

Adjustments

There are no adjustments on this instrument.

6

Replaceable Parts

6-1 Introduction

This section contains information on replaceable parts for the 37204A/B HP-IB Extender. Parts are listed in alphanumeric order. A check digit (CD) is given for each part number. This digit is numerically derived from the part number and is used by Hewlett Packard to check the validity of part numbers. Against the first occurrence of each part number in the parts listing is given the total quantity (QTY) of that part used.

6-2 Ordering Information

To order a listed part, quote the HP part number, indicate the quantity required and send the order to your nearest Hewlett Packard office. To order a part not listed, send a description of the part together with the model and serial number to your nearest Hewlett Packard office.

Table 6-1 Exchange Assembly

Assembly Name	New Assembly Part No.	Exchange Assembly Part No.
HP-IB Extenders Assembly	37204-60001	37204-69001

Table 6-2 Replaceable Parts 37204A/B Main List

Reference Designator	HP Part Number	C D	Qty	Description
MP1	37204-00001	0	1	Front Panel
MP2	37204-00002	1	1	Rear Panel
MP3	37204-60021	0	1	Top Cover (fitted with magnetic screen)
MP4	37204-00005	4	1	Bottom Cover
MP5	37204-40001	4	2	End Moldings
MP6	0403-0179	0	4	Feet

Table 6-3 Replaceable Parts Assembly A1

Reference Designator	HP Part Number	C D	Qty	Description
A1	37204-60001	6	1	Board Assembly
C1	0160-4574	3	2	C Fxd 1000pF 10% 100V
C2	0160-4574	3		C Fxd 1000pF 10% 100V
C3	0180-3802	8	1	C Fxd 10,000uF 25V AL
C4	0180-0374	3	1	C Fxd 10uF 20V TA
C5	0160-3879	7	2	C Fxd 0.01uF 20% 100V
C6	0160-3879	7		C Fxd 0.01uF 20% 100V
C7	0160-4835	7	15	C Fxd 0.1uF 10% 50V
C8	0160-4835	7		C Fxd 0.1uF 10% 50V
C9	0160-4835	7		C Fxd 0.1uF 10% 50V
C10	0160-4835	7		C Fxd 0.1uF 10% 50V
C11	0160-4835	7		C Fxd 0.1uF 10% 50V
C12	0160-4835	7		C Fxd 0.1uF 10% 50V
C13	0160-4835	7		C Fxd 0.1uF 10% 50V
C14	0160-4835	7		C Fxd 0.1uF 10% 50V

Table 6-3 Replaceable Parts Assembly A1 (Continued)

Reference Designator	HP Part Number	C D	Qty	Description
C15	0160-4835	7		C Fxd 0.1uF 10% 50V
C16	0160-4835	7		C Fxd 0.1uF 10% 50V
C17	0160-4835	7		C Fxd 0.1uF 10% 50V
C18	0160-4835	7		C Fxd 0.1uF 10% 50V
C19	0160-4835	7		C Fxd 0.1uF 10% 50V
C20	0160-4835	7		C Fxd 0.1uF 10% 50V
C21	9135-0150	7	1	C Fxd 0.15uF + 2 X 4700pF
C22	0160-4835	7		C Fxd 0.1uF 10% 50V
C23	0160-3874	2	1	C Fxd 10pF 5% 200V
CR1	1901-0662	3	2	DIO PWR RECT 5A 100V
CR2	1901-0662	3		DIO PWR RECT 5A 100V
CR3	0837-0204	1	1	VARISTOR 24V
CR4	1902-3097	6	1	ZNR 5.23V 2%
CR5	1990-0618	6	2	LED (Red)
CR6	1990-0618	6		LED (Red)
CR7	1990-0943	0	1	LED (Green)
F1	2110-0269	0	2	FUSE HLDR (Clip)
	5040-3081	4	1	FUSE HLDR (Cover)
	2110-0318	0	1	FUSE 0.125A 250V Timed (220/240V)
	2110-0201		1	FUSE 0.250A 250V Timed (100/120V)
J1	1251-7651	5	1	HP-IB Connector
J4	1251-4743	0	1	Power Connector
J5	1200-1277	2	1	A2 / A10 Board Connector
J6	1250-2001	7	2	BNC Connector (Port B)
J7	1250-2001	7		BNC Connector (Port A)
J8	1251-4631	5	3	LED Connector
J9	1251-4631	5		LED Connector
J10	1251-4631	5		LED Connector
MP1	37204-00016	7	1	HEATSINK

Table 6-3 Replaceable Parts Assembly A1 (Continued)

Reference Designator	HP Part Number	C D	Qty	Description
R1	0698-0082	7	3	R Fxd 464 ohm 1% 0.125W
R2	0698-0082	7		R Fxd 464 ohm 1% 0.125W
R3	0698-0082	7		R Fxd 464 ohm 1% 0.125W
R4	0757-0442	9	2	R Fxd 10K ohm 1% 0.125W
R5	0757-0442	9		R Fxd 10K ohm 1% 0.125W
S1	3101-0493	4	1	MASTER-MIDDLE-END switch
S2	3101-2844	3	1	DIP Switch (6 switches)
S3	3101-2616	7	2	Switch, Voltage Select
S4	3101-2616	7		Switch, Voltage Select
T1	37204-80001	8	2	XFMR, Pulse
T2	37204-80001	8		XFMR, Pulse
T3	9100-4474	3	1	XFMR, Power
	37212-00020	3	1	Magnetic Screen
U1	1820-1689	4	4	ICD MC3446
U2	1820-1689	4		ICD MC3446
U3	1820-1689	4		ICD MC3446
U4	1820-1689	4		ICD MC3446
U5	1820-0535	7	2	ICD SN75451
U6	1820-0535	7		ICD SN75451
U7	1820-4138	4	2	ICD SN75175
U8	1820-4138	4		ICD SN75175
U9	1826-0122	0	1	ICR 7805
U10	37204-80003	0	1	ICD Gate Array
	1251-0600	0	1	Socket for U10*
U11	1810-0162	5	1	R Netwk 13 X 4.7K ohm
U12	37204-80002	9	1	R Netwk Special

* On later versions of the A1 assembly, U10 is soldered in position and not mounted on a socket.

Table 6-4 Replaceable Parts A2 Assembly

Reference Designator	HP Part Number	C D	Qty	Description
A2	37204-60002	7	1	Fiber Optic Board Assembly
C1	0160-4835	7	2	C Fxd 0.1uF 10% 50V
C2	0180-2815	1	1	C Fxd 100uF 10V TA
C3	0180-2816	2	4	C Fxd 68uF 10V TA
C4	0180-2816	2		C Fxd 68uF 10V TA
C5	0180-2816	2		C Fxd 68uF 10V TA
C6	0180-2816	2		C Fxd 68uF 10V TA
C7	0160-4835	7		C Fxd 0.1uF 10% 50V
C8	0160-3874	2		C Fxd 0.01uF
J2	1200-0926	6	4	5 Pin socket for OP1
J3	1200-0926	6		5 Pin Socket for OP2
J4	1200-0926	6		5 Pin Socket for OP3
J5	1200-0926	6		5 Pin Socket for OP4
L1	9140-0399	7	4	Ind 2.2uH 5%
L2	9140-0399	7		Ind 2.2uH 5%
L3	9140-0399	7		Ind 2.2uH 5%
L4	9140-0399	7		Ind 2.2uH 5%
LK1	1251-4670	2	1	Post, 3 Pin
	1258-0209	9	1	Shorting Link
R1	0757-0459	8	1	R Fxd 56.2K 1% 0.125W
R2	0757-0442	9	2	R Fxd 10K 1% 0.125W
R3	0757-0442	9		R Fxd 10K 1% 0.125W
R4	0757-0438	3	1	R Fxd 5.11K
U1	1820-1423	4	1	ICD 74LS123
U2	1820-1204	9	1	ICD 74LS20
U3	1820-1197	9	1	ICD 74LS00
U4	1820-1430	3	1	ICD 74LS161
U5	1820-1210	7	1	ICD 74LS51

Table 6-4 Replaceable Parts A2 Assembly (Continued)

Reference Designator	HP Part Number	C D	Qty	Description
U6	1820-1196	8	1	ICD 74LS174
U7	1820-1144	6	1	ICD 74LS02
W1	8120-4738	0	1	Ribbon Cable 14 Way
The following 37204A Main List parts are required for options 001/002. These parts are not included in the 37204-60002 Assembly.				
MP8	0515-0536	0	3	Screw M3 X 6 (secures board to pillars)
MP10	0520-0129	8	4	Screw 2-56 X 0.312 } secures fiber
MP11	2190-0103	9	4	Washer Lk Int No 2 } module to board
For Option 002 increase quantity of MP10 and MP11 to 8				
OP1	1005-0021	8		Fiber Optic TX (Port B)
OP2	1005-0005	8		Fiber Optic RX (Port B)
OP3	1005-0021	8		Fiber Optic TX (Port A)
OP4	1005-0005	8		Fiber Optic RX (Port A)

Table 6-5 Replaceable Parts A10 Assembly

Reference Designator	HP Part Number	C D	Qty	Description
A2	37204-60010	7	1	Extended Power Fail Assembly
C1	0180-2207	5	1	C Fxd 100uF 10V TA
C2	0160-4835	7	4	C Fxd 0.1uF 10% 50V
C3	0160-4835	7		C Fxd 0.1uF 10% 50V
C4	0160-4835	7		C Fxd 0.1uF 10% 50V
C5	0160-4835	7		C Fxd 0.1uF 10% 50V
R1	0698-0083	8	3	R Fxd 1.96K ohm 1% 0.125W
R2	0698-0083	8		R Fxd 1.96K ohm 1% 0.125W
R3	0757-0465	6	1	R Fxd 100K ohm 1% 0.125W
R4	0698-0083	8		R Fxd 1.96K ohm 1% 0.125W
R5	0757-0346	2	1	R Fxd 10 ohm 1% 0.125W
R6	0698-3136	8	1	R Fx 17.8K ohm 1% 0.125W
R7	0757-0442	9	1	R Fxd 10K ohm 1% 0.125W
R8	0698-3153	9	1	R Fxd 3.83K ohm 1% 0.125W
R9	0698-3162	0	1	R Fxd 46.4K ohm 1% 0.125W
U1	1826-0175	3	1	ICL 319N
U2	1820-0535	7	1	ICD 75451
U3	1820-3673	0	1	ICD 74HC123
W1	8120-4738	3	1	Ribbon Cable 14 way
MP8	0515-0536	0	3	Screw M3 X 6 (secures board to pillars)

Note: MP8 is not included in the 37204-60010 Assembly.

7

Manual Changes

7-1 Introduction

This section normally contains information for adapting this manual to instruments for which the manual content does not apply directly. Since this manual does apply directly to instruments having Serial Numbers listed on the title page, no change information is given here.

Refer to para entitled SERIAL NUMBER/MANUAL CHANGES in section 1 for additional important information about Serial Numbers coverage.

8

Service

8-1 Introduction

This section provides fault isolation, service and repair information for the 37204A/B HP-IB Extender.

8-2 Preventive Maintenance

There is no specific preventive maintenance procedure for the 37204A/B. However, if the cable link between Extenders passes through areas of poor environmental condition, check the cable, etc, periodically for damage.

8-3 Fault Isolation

Start with General Service Sheet G1:

1. Use G1-1 to resolve if the problem is caused by an HP-IB device connected to the Extender chain or lies within the 37204A/B Extender chain itself.

2. Use G1-2 to find out which item in the Extender chain is faulty: Extender or cable link.

Use G2-1 to find out which assembly is faulty on the Extender; and, when this is resolved, use A1, A2 or A10 sheets to find the faulty component.

8-4 Safety Requirements

This section contains information and, warnings which must be followed for your protection and to avoid damage to the equipment.

WARNING

PROCEDURES DESCRIBED IN THIS SECTION ARE PERFORMED WITH PROTECTIVE COVERS REMOVED AND POWER SUPPLIED TO THE INSTRUMENT. SERVICING SHOULD ONLY BE PERFORMED BY TRAINED PERSONNEL WHO ARE AWARE OF THE HAZARDS INVOLVED.

8-5 Recommended Test Equipment

Table 1-1 lists test equipment required to maintain the 37204A/B is listed. Any equipment that satisfies the critical specifications given in the table may be substituted for the recommended models.

8-6 Repair

Once a faulty 37204A/B has been identified, you can choose to repair it to component level or simply replace the failing assembly.

For assembly level repair, refer to General Service Sheet G2. For component level repair, refer to the appropriate Assembly Service Sheet (A1, A2 or A10).

8-7 Co-Axial Cable Repair

Repair damaged or faulty co-axial cable links between Extenders by cutting out the damaged portion of cable and splicing in a new section.

8-8 Fiber Optic Cable Repair

You require special tools to repair fiber optic cable. (HP Part No. HFBR-0100 is a

complete tooling kit including connectors and consumables.) If you do not wish to repair a cable yourself, ask your nearest Hewlett Packard Service office for assistance.

Ensure that the ferrule tip of the fiber optic cable and the fiber optic connector are kept clean. Fit protective covers over any unused connectors. If the connector ferrule becomes dirty, wipe it clean with a swab moistened with iso-propyl alcohol.

8-9 Description Of Self Test

8-9-1 Introduction

Self test runs a thorough check on Extender performance and also provides signals used in troubleshooting. Figure 8-1 shows all the functional blocks and signal paths involved in self test.

Self test forces U10 to exercise and check all signal paths which carry either HP-IB data or serial message frames. Correct self test operation is indicated by both PORT FAULT lamps flashing on briefly at power-on, then remaining off. Subsequent lighting of a PORT FAULT lamp indicates a self test failure. A fault lamp may remain lit even after the fault has disappeared or been removed. Recycling power resets self test.

8-9-2 Co-Axial Ports

U10 outputs serial data frames to the A and B port alternately. The loop-backs built into the co-axial ports (loop-backs 1 and 2 in Figure 8-1) return the message frames to U10. Any received data errors or absence of looped-back data cause self test to fail. If a port fails, U10 transmits continuously to the failing port until a good message is received and no message frames get sent to the other port.

The serial message frames sent to each port are approximately 2us long and repeated every 15us in NORMAL speed (20us long, repeated every 150us in SLOW speed).

8-9-3 HP-IB Interface

The HP-IB output lines from U10 are looped back to U10 via the driver/receiver pairs of transceivers U1 through U4 (loop-back paths 3 through 18 in Figure 8-1). The message frames used to test the co-axial ports also exercise all active HP-IB interface lines, driving these lines high and low. The user must check both co-axial loop-back paths before checking the HP-IB interface lines.

A fault in one of the transceiver loop-back paths may cause other HP-IB interface lines from U10 to stay stuck at either a high or a low level. For this reason, the user must check HP-IB loop-back paths in the order shown in Figure 8-1 because the first stuck loop-back path identifies the faulty path.

8-9-4 Fiber Optic Interface

The co-axial ports must pass self test before you can can test the fiber optic ports.

For self test of a fiber optic port, set the rear panel switch to FIBER, connect the fiber optic transmitter to receiver via an external looping cable and recycle power. The fiber optic loops are 1f and 2f in Figure 8-1.

Note: **The duration of the lamp flash (which indicates a pass) is longer when one or more fiber ports are selected - approximately 2.6s.**

8-10 Running Self Test

Self test exercises all the main functions of the 37204A/B including co-axial, fiber optic and HP-IB interfaces.

8-10-1 Testing the COAX Ports

1. Disconnect the Extender from the Extender network. On the rear panel, set the TEST switch to TEST and the FIBER switches to NORMAL.

2. Apply power. Check that the front panel POWER lamp lights. If not, check the internal line fuse. See Appendix B for voltage selection/fuse information.

3. Recycle power on the 37204A/B. Check that both PORT FAULT lamps flash on briefly then remain off.

   37204A: Both PORT FAULT lamps flash almost immediately after power is re-applied.

   37204B: There is a distinct pause, 1.5s long, after power is re-applied before the PORT FAULT LAMPS flash. If the lamps flash but the pause is substantially longer or shorter than 1.5s, suspect the Extended Power Fail Assembly (A10).

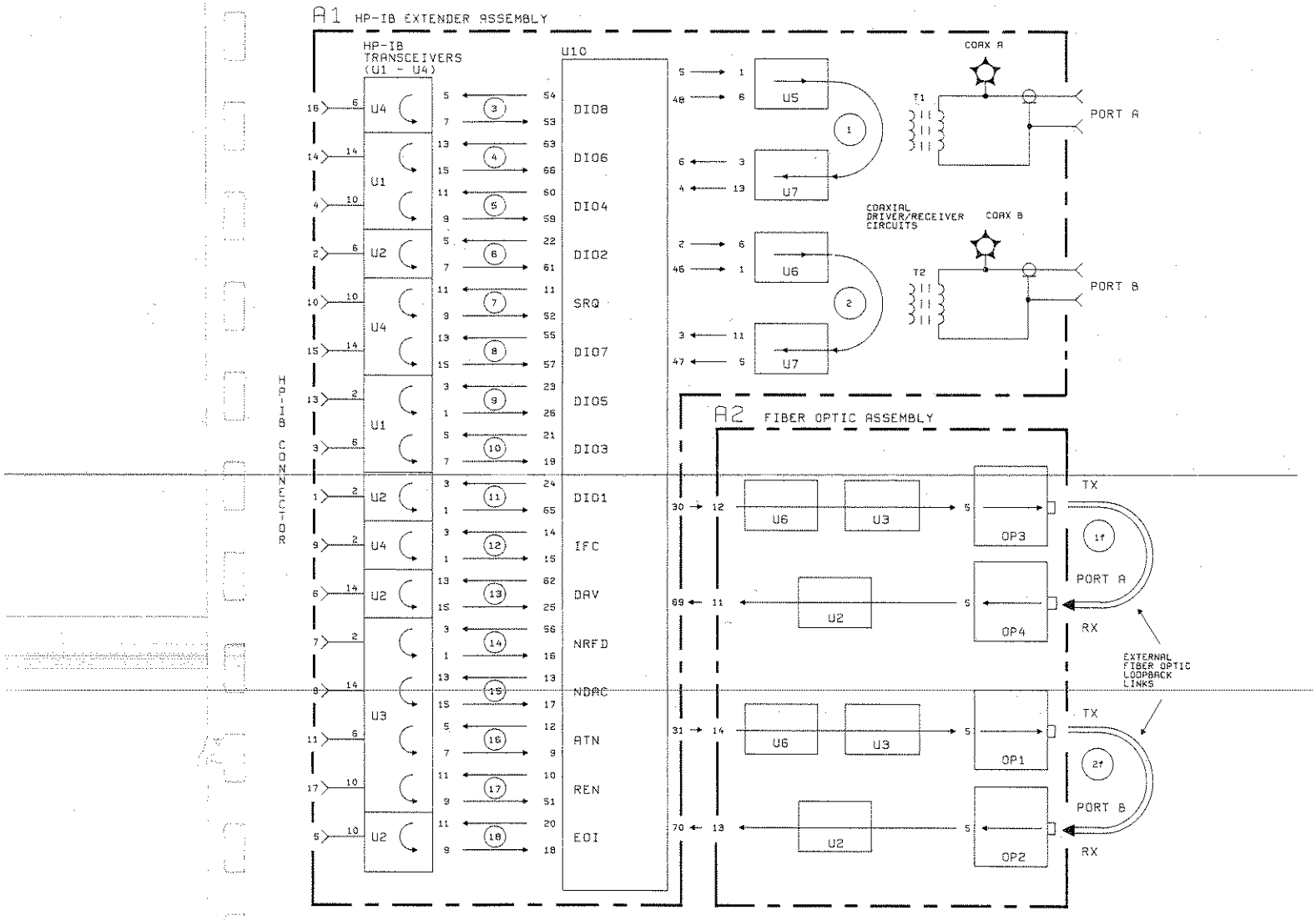

Figure 8-1 Block Diagram of 37204A Showing Self Test Loop-back Paths

4. If either PORT FAULT lamp does not flash, flashes after the initial turn-on flash, or remains on, suspect the A1 assembly.

5. On Extenders without fiber optic ports, self test is complete. Reset the TEST switch to NORMAL.

8-10-2 Testing The Fiber Optic Ports (Option 001/002 Only)

1. Set the rear panel switch to FIBER on the port under test. If the Extender has two fiber ports, set the other port to NORMAL.

2. Connect a fiber optic loop-back cable between TX and RX on the selected fiber optic port. (A plastic fiber loop-back cable, HP Part No. 5061-2694 is suitable. The cable fits inside the inner sleeve of the fiber optic port. Make sure it is pushed fully home.)

3. Recycle power. Check that both PORT FAULT lamps light for about 2.5s, then go off, and remain off. If either lamp fails to come on, remains on, or flashes again, suspect the fiber optic port under test.

4. If the Extender has a second fiber optic port, reset the rear panel FIBER switches: port just tested to NORMAL; port not tested to FIBER. Repeat from step 2.

5. Reset the TEST switch to NORMAL and the FIBER switches to their original states.

GENERAL SERVICE SHEET G1
SYSTEM TROUBLESHOOTING

G1-1 Faulty Extender Chain or HP-IB Device?

This procedure will help you determine if the problem is within the Extender chain or caused by a device connected to the Extender chain.

Note: **Sometimes HP-IB/IEEE 488 devices work correctly when directly connected but not when linked via 37204A/B Extenders. Do not assume that the problem is caused by the Extender chain. It could well be poor implementation of the IEEE 488-1978 standard in one of the devices connected to the Extender chain.**

G1-1-1 All PORT FAULT lamps Off

In this case, communication between Extenders is OK but the HP-IB interface on an Extender could be faulty. To check, run self test (para 8-10) on all Extenders.

G1-1-2 One or More PORT FAULT Lamps On

1. *Truncation feature not enabled.* In this case, look no further than the master Extender. If a lamp is on or flashing, suspect a fault in the Extender chain and proceed to para G1-2.

2. *Truncation feature enabled on all Extenders.* Locate the truncating Extender (Figure G1-1):
   - Extenders from the master up to (but not including) the truncating Extenders have all PORT FAULT lamps off.
   - The truncating Extender and the end Extender have one PORT FAULT lamp on and the other off.
   - Extenders beyond the truncating Extender up to the end Extender have all PORT FAULT lamps on.

Run self test (para 8-10) on the truncating Extender and its neighbor nearest to the end Extender. If both Extenders pass, suspect the cable link between the Extenders. If either Extender fails, proceed to para G2-1.

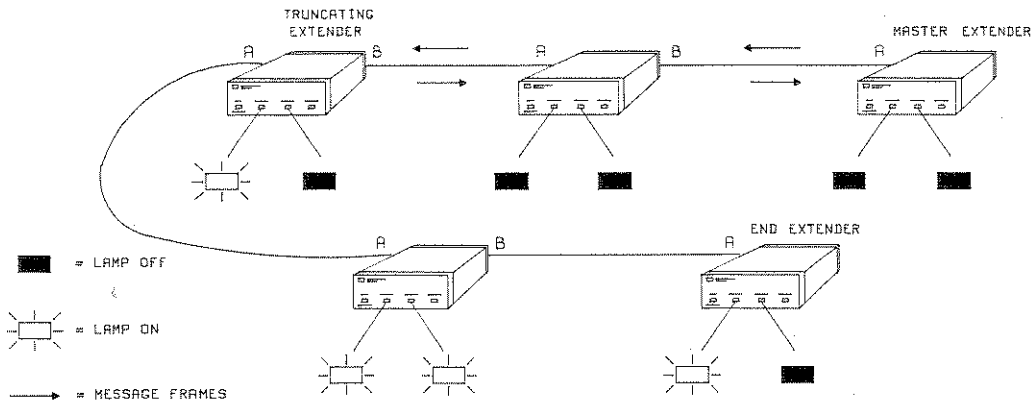

Figure G1-1 Locating a Truncating Extender

G1-2 Troubleshooting Within The Extender Chain

G1-2-1 Background

In an Extender chain, message frames propagate from the master Extender along the Extender chain to the end Extender, then return in the reverse direction to the master. Only one message frame is allowed in the Extender chain at any one time: the master Extender waits until the frame is returned before generating a new frame. *The message path is thus a loop, beginning and ending at the master.*

If no message is returned within the master's timeout period, the master lights its PORT A FAULT lamp and re-transmits the original message. The PORT A FAULT lamp will remain on until message frames are again received back at the master. Non-return of a message frame indicates that the message frame has been lost. There are two possible causes:

1. There is a break in the message path, for example, faulty Extender, incorrectly set POSITION switches on the Extenders, a powered-down Extender, or a broken cable between Extenders.

2. A message frame has been corrupted in transmission and rejected by the receiving Extender, so that no frame is forwarded to the next Extender.

The status of the PORT FAULT lamps on the remaining Extenders indicates the location of the fault in the system. On these Extenders, a PORT FAULT lamp lights if,

1. No message frames have been received at that port for 100ms.
2. A corrupted message frame has been received.

The master timeout (1.6ms) is much shorter than the 100ms timeout of the other Extenders in the chain. Thus, Extender ports located before a break in the chain receive a message frame every 1.6ms and have their PORT FAULT lamps off, whilst Extender ports located after the break will have their PORT FAULT lamps on.

If an occasional message frame is corrupted, the master PORT A FAULT lamp flashes (no frame returned) and the PORT FAULT lamp on the Extender receiving the faulty message frame also flashes. Other port fault lamps in the chain may remain off. See Figure G1-2.

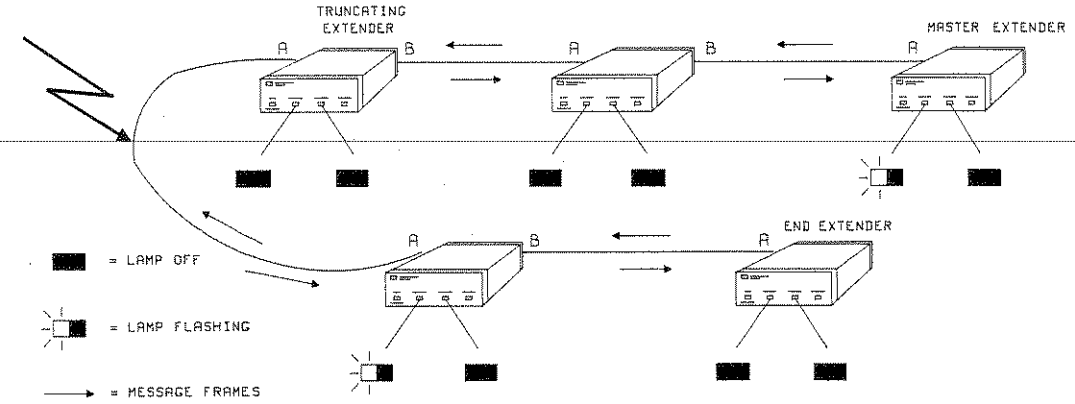

Figure G1-2 PORT FAULT Lamp Indications caused by Intermittent Errors

G1-2-2 Locating The Faulty Extender or Cable Link

Procedure:

1. Disconnect the system controller and all HP-IB devices from the Extender chain. Recycle power on all Extenders.

   Note: Step 1 is essential if the truncation feature is enabled: by preventing the system controller from asserting IFC, truncation cannot be initiated. Recycling power clears any existing truncation.

2. Determine for each Extender which port (A or B) runs back towards the master Extender and which runs out towards the end Extender.

3. Refer to Figure G1-3. Working out in strict order from the master (which should have PORT A FAULT lamp on or flashing), check the status, on each Extender, of the port running back to the master.

   - If the PORT FAULT lamp is off, move on to the next Extender. (For the moment (ie until step 5), ignore the status of the other PORT FAULT lamp.)

   - If the PORT FAULT lamp is on or flashing, go to step 4.

4. A PORT FAULT lamp lit indicates that communication is broken between the present Extender and the previous Extender visited. (A flashing PORT FAULT lamp indicates occasionally missing or corrupted message frames.) Suspect either of the Extenders or the cable link between the Extenders. To determine which, run self test (para 8-10) on the two Extenders. If both pass, suspect the cable link.

5. If the steps taken so far have not isolated the fault, use the same procedure but work back from the end Extender. This ensures that the complete loop which frames have to take is checked out and is particularly important for fiber optic links where the go/return paths are separate.

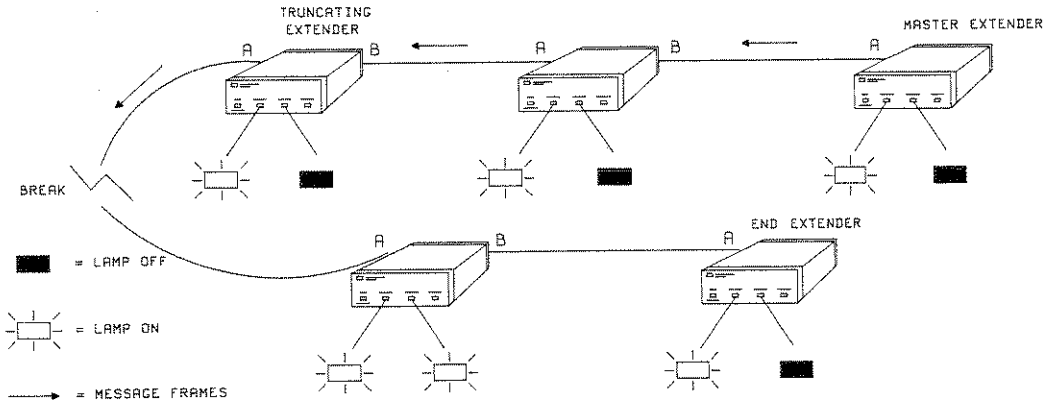

Figure G1-3 PORT FAULT Lamp Indications caused by a Continuous Failure

GENERAL SERVICE SHEET G2
INSTRUMENT TROUBLESHOOTING

G2-1 Determining Which Assembly is Faulty

Use this procedure for on-site repair of a faulty 37204A/B when component level troubleshooting and repair procedures are not practical, or as a first step in component level troubleshooting on a particular assembly.

The 37204A/B is configured according to model and option as follows:

Model	Assemblies fitted
37204A	A1
37204A Option 001	A1 + A2
37204A Option 002	A1 + A2
37204B	A1 + A10

Procedure:

1. Run the 37204A/B self test (para 8-10) and note at which stage the test fails.

2. If self test fails at para 8-10-1 and A10 is fitted and suspected as possibly faulty, proceed to step 5. However, if A10 is not fitted or A1 is clearly faulty, replace A1 as described in para G2-2.

3. If a 37204A option 001/002 fails self test at para 8-10-2, suspect the A2 fiber optic assembly. Since it is not reckoned economic to replace a complete A2 assembly, further fault isolation is recommended (step 4).

4. The A2 Fiber Optic Assembly comprises the parts listed in Table G2-1. Identify the faulty module by substituting a known good part and re-running self test after each substitution.

Note: **The fiber optic transmitter and receiver modules plug into sockets on the A2 Assembly and are retained in position by screws through the underside of the pc board. Leads on a replacement fiber optic module may have to be trimmed back to fit into the socket. Use the original part to determine the correct length.**

Table G2-1 A2 Fiber Optic Assembly: Field Replaceable Parts

Field Replaceable Part	Part Number	Option 001 QTY	Option 002 Qty
Option PC Board	37204-60001	1	1
Fiber Optic Transmitter	1005-0021	1	2
Fiber Optic Receiver	1005-0005	1	2

5. If self test clearly indicates a failure of the A10 assembly, replace A10. Otherwise, disconnect the ribbon cable from A10 assembly to A1 assembly and re-run self test. If self test passes, A10 assembly is faulty. If self test fails, A1 assembly is faulty. Replace A1 assembly as described in para G2-2.

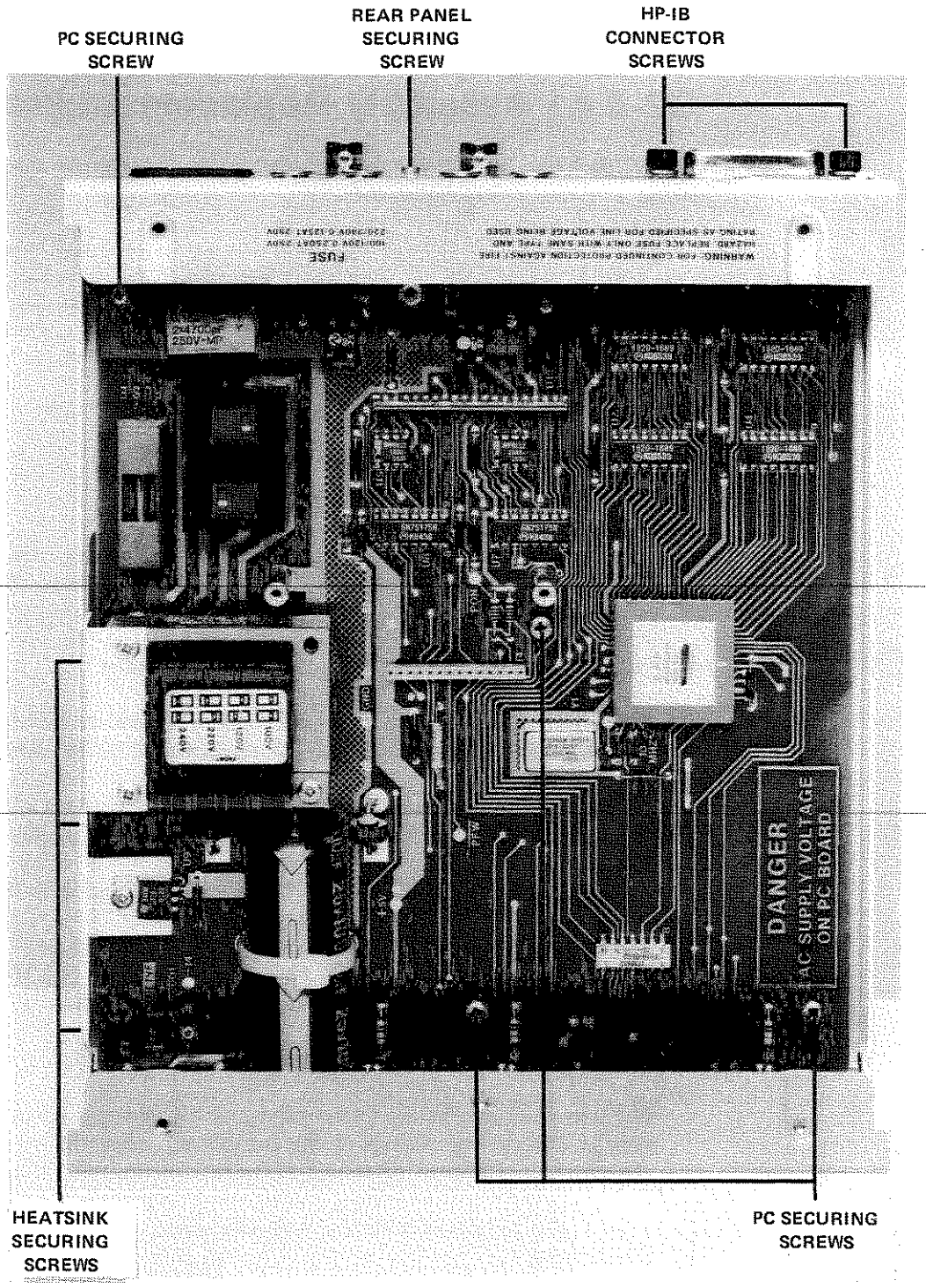

Figure G2-1 Assembly Retaining Screws

G2-2 A1 Assembly Replacement Procedure

The 37204A and 37204B HP-IB Extenders use a common A1 assembly which is available either as a new or exchange part.

	New Part Number	Exchange Part Number
HP-IB Extender Assembly	37204-60001	37204-69001

Procedure:

1. Disconnect all cabling to the Extender.

2. Remove the plastic trim from the front and rear panels. Release the trim by pushing outwards on one of the sides and the sliding trim forward. See Figure B-1, Appendix B.

3. Undo 8 cross-head screws and remove the top cover.

4. Remove the Fiber Optic (A2) assembly or Extended Power Fail (A10) assembly from A1 and retain for re-fitting onto the replacement A1 assembly.

5. Remove the 2 screws securing the HP-IB connector to the rear panel. Undo 1 cross-head screw securing the A1 assembly to the rear panel.

6. Disconnect the safety earth from the power cord socket to the rear panel.

7. Remove 3 screws securing the heatsink to the left-hand side of the Extender.

9. Undo 4 screws and remove A1 assembly from the bottom cover.

Replacement is the reverse of disassembly. Ensure that:

1. The two voltage selection switches on the replacement board are set for the correct voltage, and that the fuse is of the correct value (use the fuse from the original board if necessary). Refer to Appendix B for information on voltage selection.

2. Replace the top cover with the magnetic shield positioned over the power supply transformer.

ASSEMBLY SERVICE SHEET A1
HP-IB EXTENDER MAIN ASSEMBLY

A1-1 Introduction

This service sheet provides component level repair information for A1 assembly. The schematic diagrams for the power supply and the Extender logic are provided on separate sheets.

A1-2 Circuit Description

Regulator U9 produces +5V. If the unregulated supply to U9 falls below 7.7V, the POWER FAIL signal at U8(3) and the POWER-ON signal at U8(5) are pulled low.

The RESET signal to U8(6) is an input from the optional Extended Power Fail assembly A10. When this line is pulled low during an extended reset, the POWER-ON signal is pulled low forcing the DISABLE HP-IB DRIVERS signal at U8(11) high.

All the logical functions of the HP-IB Extender are performed within U10 which obtains timing from the 30MHz oscillator Y1. Transceivers U1 through U4 provide buffering between U10 and the HP-IB signals at connector J1.

Since identical driver/receiver circuits interface U10 with the A and B co-axial ports, only Port A circuit is described here.

The co-axial port uses alternate mark inversion (AMI) encoding (i.e "1's" are sent alternately as positive and negative going pulses). Separate open collector drivers (U5) driven by U10(48) and U10(5) provide the +ve and -ve drive through transformer T1 which isolates the co-axial port from its driver/receiver. The co-axial shield is isolated from ground and allowed to float. However, varistor CR3 limits the maximum voltage on the co-ax shield to 24V.

Signals received from the co-axial port are detected using a pair of comparators (U7), one for each direction of received signal swing (+ve or -ve). The outputs from the comparators are taken directly to U10(4) and U10(6). Typically, with no signal input, the voltages at the + and - inputs of comparator U7 are 4.7V and 4.0V, respectively.

Connector J5 links A1 to the A2 Fiber Optic or A10 Extended Power Fail assemblies. Edge connector J3 is used during production test and has no other function.

A1-3 Troubleshooting Procedure

Enter this procedure after running self test (para 8-10) and failing the COAX ports test (para 8-10-1).

General:

1. If an Extended Power Fail (A10) or Fiber Optic (A2) assembly is fitted, disconnect the ribbon cable at J1. It may be convenient to remove the A2 or A10 assembly.

2. Set all rear panel switches to NORMAL (down). Set the front panel POSITION switch to MASTER. Power on the Extender.

3. Check that the voltage on the +5V test pin is +5V ± 0.25V. Check that the power supply ripple is less than 50mV peak-to-peak.

4. Check that the $\overline{PFW}$ (Power Fail Warning) and $\overline{PON}$ (Power ON) test points are both high.

5. Check that the frequency at the 10MHz test point is 10MHz ± 10kHz. If correct, the 30MHz output of Y1 can be assumed OK.

Port A:

6. Check at the COAX A test point for a short (approximately 2us) burst of AMI signal occurring every 1.6ms. The signal waveform has the form

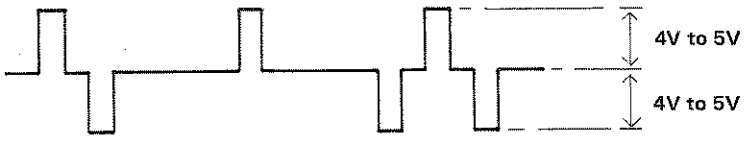

- If the signal is OK, check that U10 is receiving data by looking for bursts of TTL

activity at both U7(3) and U7(13). If this is OK, suspect U10, otherwise suspect the comparator circuit (U7).

- If the signal pulses are of only one polarity, suspect one of the output drivers (U5) or U10. Confirm this by looking for TTL activity at U5 (6,7) and U5 (1,2).

- If no signal is present, suspect a discontinuity in the driver output circuitry (U5 and T1). Also check that MASTER mode is selected correctly on S1.

Port B:

7. If step 6 shows correct operation at port A, set the rear panel TEST switch to TEST, recycle power and check out port B in a similar manner to port A. (Look for inputs to U10 at U7(11) and U7(5) and outputs from U10 at U6(1,2) and U6(6,7).)

   Note: Self test sends out data alternately to ports A and B when no fault is found but continuously to one port when found faulty. Thus, if port A passes and port B fails, nothing gets sent again to port A until port B passes; and if port A fails, nothing gets sent to port B.

8. If the A and B ports pass self test, set the front panel switch to MIDDLE and check that the AMI signal is switched off at the COAX A test point. If not, suspect S1 or U10.

HP-IB Interface:

9. Self test exercises, continuously and in a set sequence, all the HP-IB interface lines on U10. Transcievers, U1 through U4, output the signals from U10 to the HP-IB connector (J1) and, at the same time, loop them back to U10. Using an oscilloscope or logic probe, check the operation of the HP-IB lines by looking for TTL activity on all the pins listed in Table A1-1. Work down from the top of the table in strict order.

   Note: 1. The paths through the transceivers are non inverting. If an output from U10 is found to be stuck, check that the transceiver returns the same TTL level to U10 as sent out. If not, suspect the transceiver; otherwise suspect U10.

   2. The HP-IB handshake lines DAV, NRFD and NDAC have to be considered together. If any one is found to be stuck, check the transceivers in all three handshake lines as described in Note 1 before suspecting U10.

Table A1-1 U10 HP-IB Loop-back Testing Sequence

O/P from U10	Connection to HP-IB Bus	I/P to U10	Interface Signal
U4 (5)	U4 (6)	U4 (7)	DIO 8
U1 (13)	U1 (14)	U1 (15)	DIO 6
U1 (11)	U1 (10)	U1 (9)	DIO 4
U2 (5)	U2 (6)	U2 (7)	DIO 2
U4 (11)	U4 (10)	U4 (9)	SRQ
U4 (13)	U4 (14)	U4 (15)	DIO 7
U1 (3)	U1 (2)	U1 (1)	DIO 8
U1 (5)	U1 (6)	U1 (7)	DIO 3
U2 (3)	U2 (2)	U2 (1)	DIO 1
U4 (3)	U4 (2)	U4 (1)	IFC
U2 (13)	U2 (14)	U2 (15)	DAV
U3 (3)	U3 (2)	U3 (1)	NRFD
U3 (13)	U3 (14)	U3 (15)	NDAC
U3 (5)	U3 (6)	U3 (7)	ATN
U3 (11)	U3 (10)	U3 (9)	REN
U2 (11)	U2 (10)	U2(9)	EOI

19. If the above checks do not pinpoint the problem, replace U10 and repeat self test. If U10 is installed in a socket, remove it by gently easing up each side of U10 in turn with a small flat bladed screwdriver.

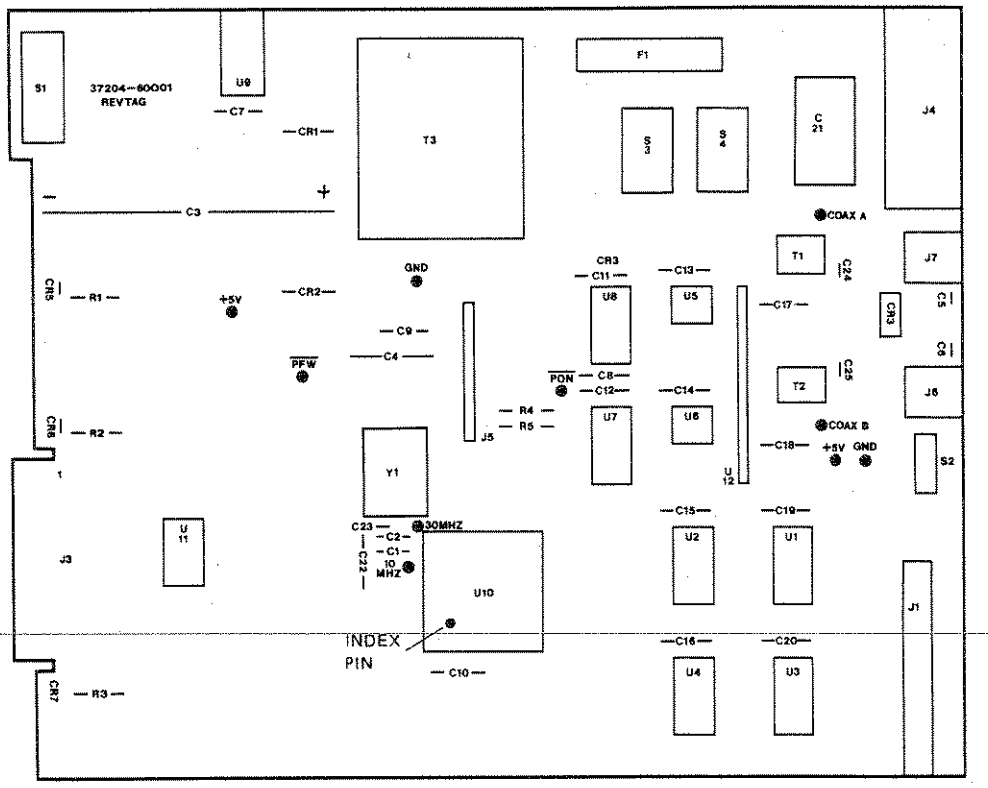

Figure A1-1 A1 Component Location

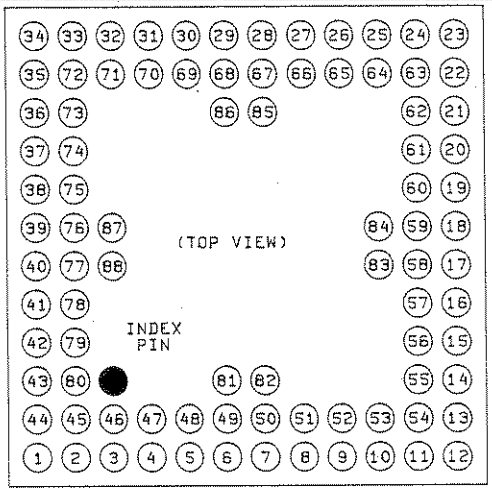

Figure A1-2 U10 Pin Location

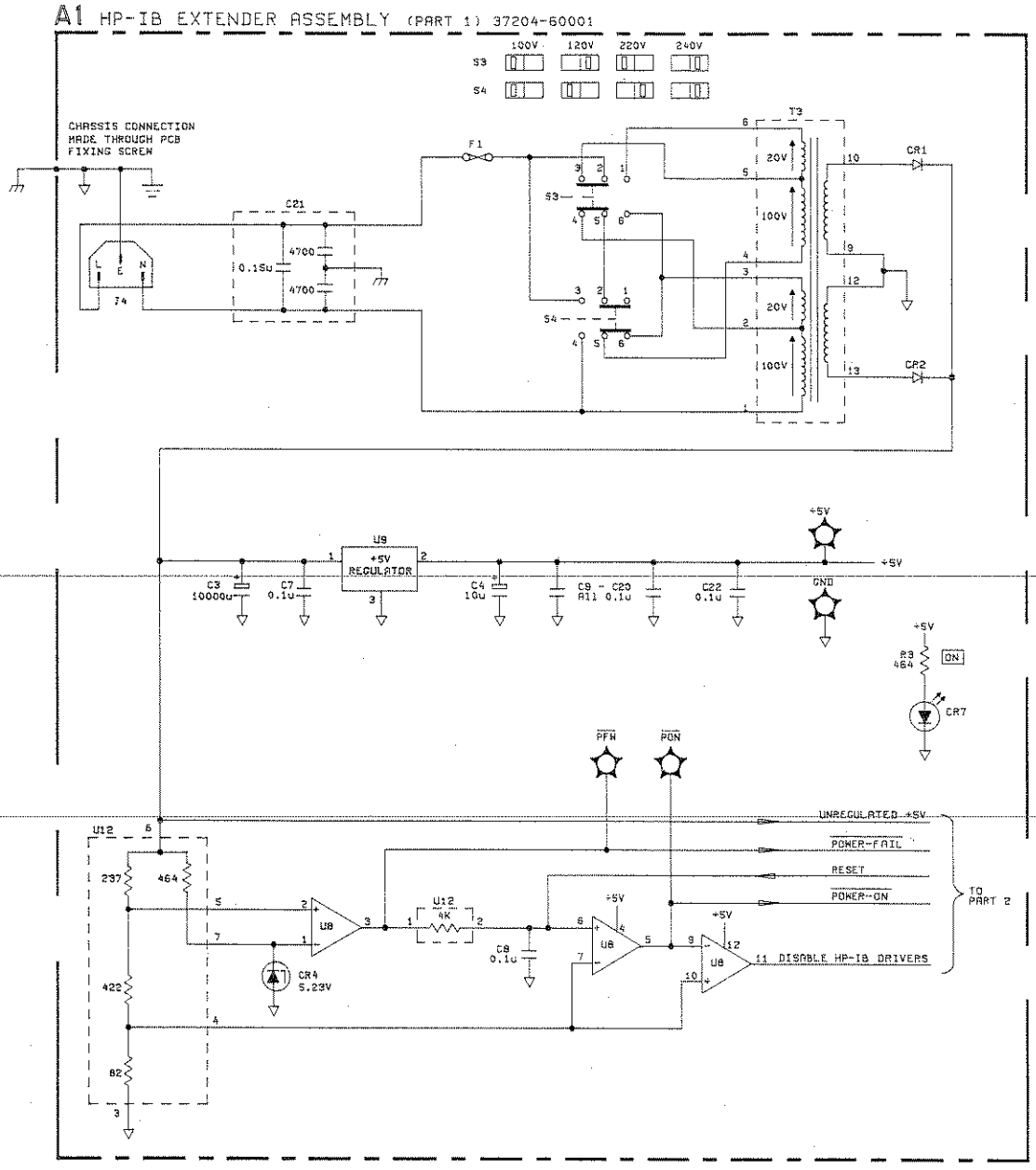

Figure A1-3 A1 Power Supply

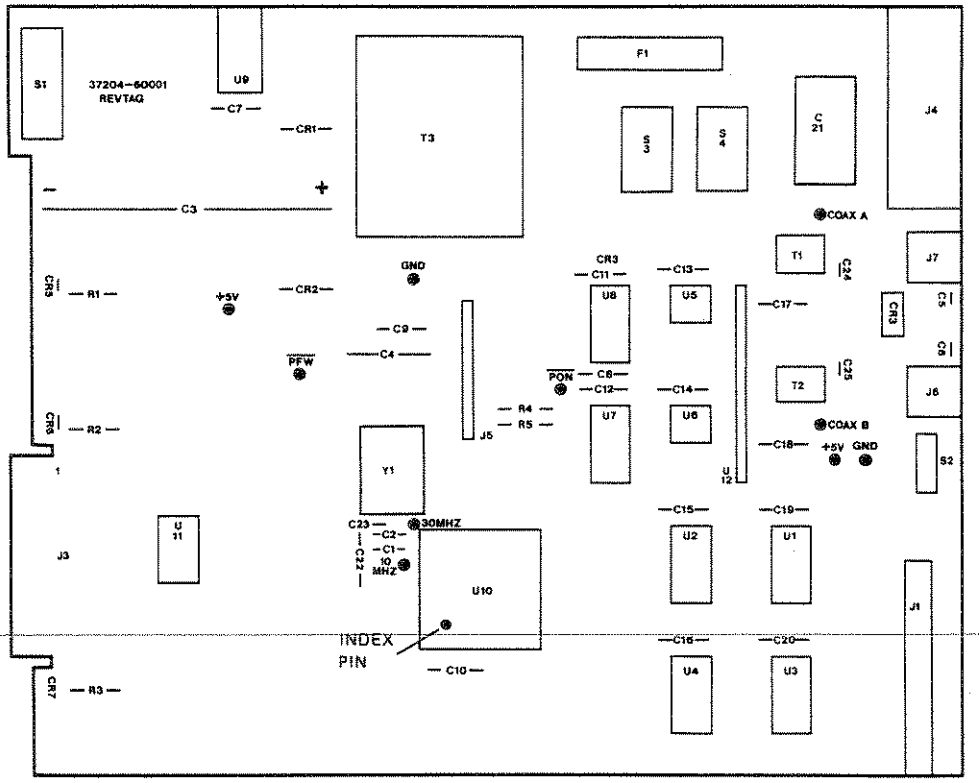

Figure A1-4 A1 Component Location

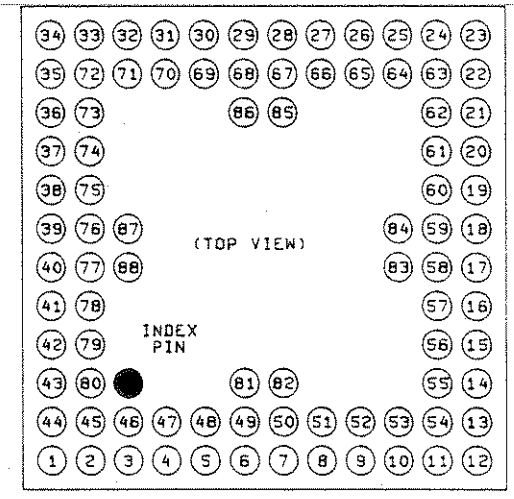

Figure A1-5 U10 Pin Location

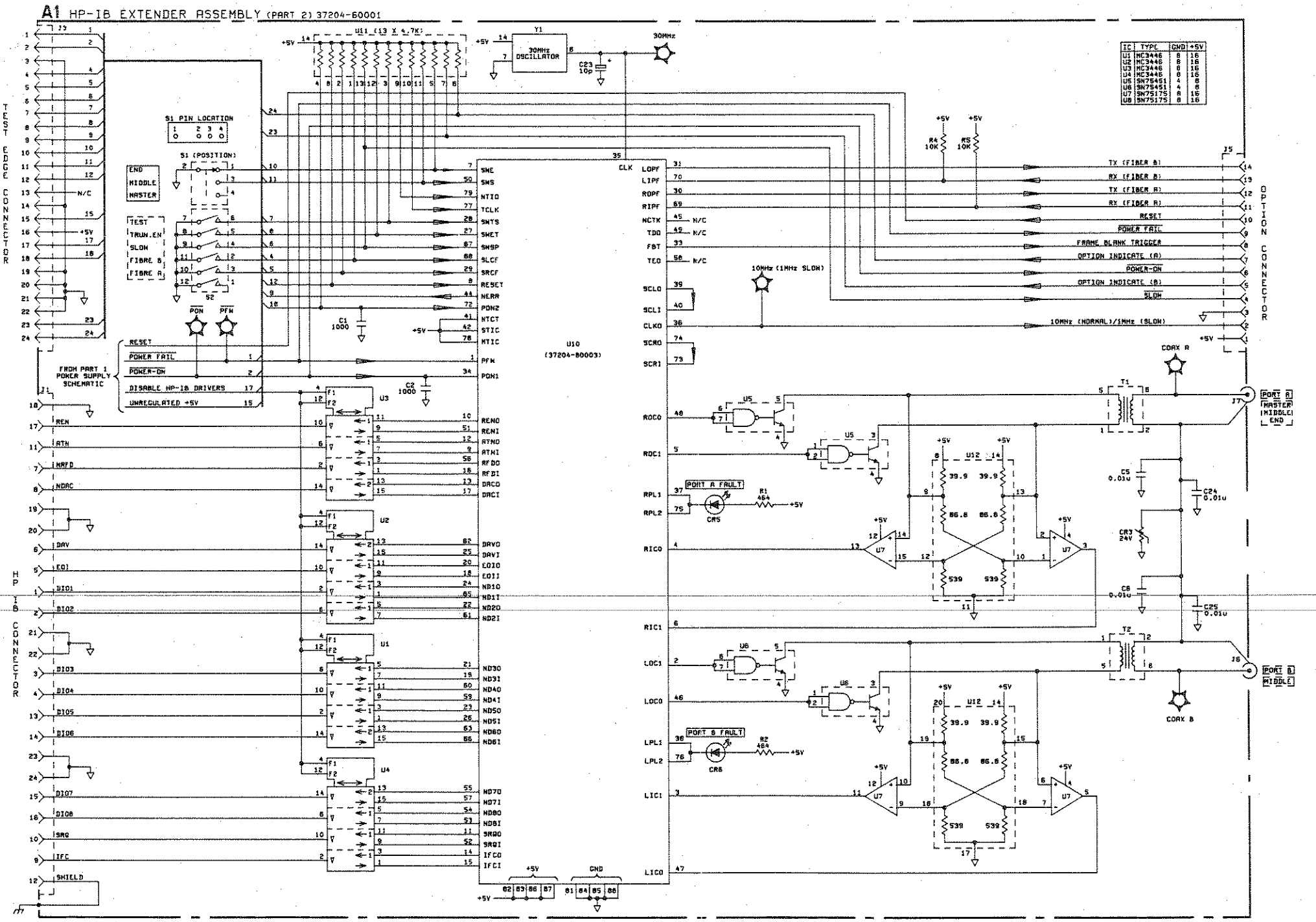

Figure A1-6 A1 Extender Logic and Driver/Receivers

Figure A1-6 A1 Extender Logic and Driver/Receivers

ASSEMBLY SERVICE SHEET A2
FIBER OPTIC ASSEMBLY

A2-1 Introduction

This service sheet provides component level repair information for the A2 assembly. The assembly may have one (option 001) or two (option 002) fiber optic ports fitted.

A2-2 Circuit Description

Separate, plug-in, fiber optic modules provide the fiber/electrical conversion on A2 Assembly (2 transmitter and 2 receiver modules).

The setting of the FIBER switches on the rear panel determines which or both of the transmit/receive signal pairs are routed from A1 to A2 assemblies.

Since ports A and B have identical transmit/receive circuits, only port A circuit is described here.

The transmit signals arriving at J1(12) are delayed by two clock pulses (via two D-type flip flops in tandem) and inverted before being input at pin 5 of the fiber optic transmitter.

The MONITOR output (pin 2) of a fiber optic receiver goes low if the received light level falls below a safe level. The signal is gated with the received signal (U2 pin 10) to disable the received signal line if the MONITOR output goes low. However, the MONITOR output may take up to 2s to react to a sudden drop in the light level. During this period, random data could be output by the fiber optic receiver. An interlock prevents this from being interpreted as valid data. Whenever a corrupted data frame is detected by A1 U10, FRAME BLANK TRIGGER triggers monostable U1A which disables the received data path in U2 for 2.6s, allowing sufficient time for the MONITOR line to go low.

The remaining circuitry on the A2 assembly ensures that pin 1 (MODE) on the fiber optic transmitter modules is correctly conditioned. Different conditioning sequences are used for SLOW and NORMAL speeds.

In SLOW speed, monostable U1B is enabled and is continuously triggered at the 1MHz by CLK. The output from the monostable is a continuous train of short-duration, high-going, 1MHz pulses which are applied to the MODE input of the fiber optic transmitters.

In NORMAL speed, the MODE input is pulsed high immediately before the start of each 22-bits-long message frame. This is achieved as follows.

The low-going start pulse at the beginning of each message frame is detected at U5(3) or U5(2) which forces U5(6), and, in turn, MODE on the fiber optic transmitters, to go high. The start pulse also triggers the COUNT 25 LOGIC by setting U5(8) high. Once U6 is clocked, the high at U5(8) is transferred to pin 9 (LOAD) of the binary counter U4 allowing it to count up.

The high at U6(12) forces U5(6) (and thence MODE) low again. MODE remains low until U6(12) returns to low 25 clock pulses later. Since the message frame is 22 bits long, MODE is not pulsed again until the start of the next message frame.

Link LK1 is used during factory tests to determine the option status of the 37204A/B under test. The setting of this link has no effect on Extender operation and can be ignored.

A2-3 Troubleshooting Procedure

Enter this procedure after running self test (para 8-10), passing the COAX port tests (para 8-10-1) but failing the fiber optic port tests (para 8-10-2).

Data Path Through Fiber Ports:

1. Set the rear panel switch to FIBER on the port failing self test and to NORMAL on the other port. If both fiber ports fail self test, select PORT A and test first; then select PORT B and repeat the tests.

2. Set the rear panel TEST and SLOW switches up and set all other switches to NORMAL. Using optical cable, loop the transmitter to the receiver on the port under test (see para 8-10-2). Recycle power.

3. Use table A2-1 to check the data paths through ports A and B.

Table A2-1 Looped Back Test Signals

Signal	Test Point (Port A)	Test Point (Port B)	Correct Test Signal
1	TX (FIBER A)	TX (FIBER B)	TTL activity
2	U6(5)	U6(10)	Signal 1 delayed by 2 clock pulses
3	U3(3)	U3(6)	Signal 2 inverted
4	U2(10)	U2(2)	Signal 3
5	U2(8)	U2(6)	Signal 3 inverted

4. Check that the MODE signal at TP1 is a train of narrow (90ns), high-going pulses at 1MHz. If the signal is missing or wrong, suspect monostable U1B.

5. Recycle power and check that the monostable output at U1(12) is held low for approximately 2.6s after power is applied, then goes high and remains high. If the monostable gets triggered (output low) after the initial 2.6s, A1U10 is detecting errors in the received signal. The problem may be a faulty fiber optic transmitter or receiver module.

Count 25 Logic:

6. The Count 25 logic is enabled when $\overline{\text{SLOW}}$ is active (i.e. J1(4) high). To check the logic, set the rear panel SLOW switch to NORMAL and recycle power. (The optical loop back is not needed for this test and may be removed).

7. Check TP1 for a short high-going pulse (0.2us wide). The pulse should not repeat within 2.5us. If the pulse is missing or otherwise incorrect, set the rear panel TEST switch to NORMAL, the front panel position switch to MIDDLE and recycle power.

8. Check that U5 pins 2, 3, 4, 5, 9, 10, 11 and 12 are all high and that U5 pins 1, 6, 8 and 13 are all low.

9. Reset the rear panel switch to TEST and recycle power.

10. Check that the low-going pulse at the start of each TX message on J1(12) or J1(14) causes a rising edge on U5(6) and U5(8).

11. Trigger an oscilloscope on the rising edge of the signal at U4(9). Check that U4(9) stays high for 2.5us (25 x 1MHz clocks) then goes low. If the signal is incorrect, check the count sequence of U4.

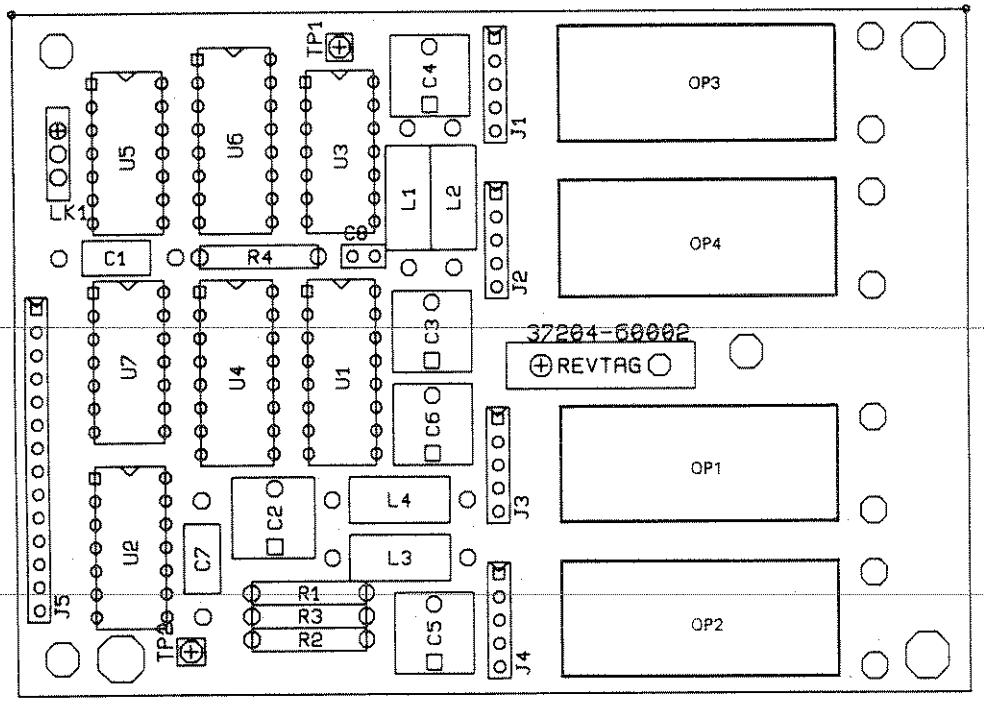

Figure A2-1 A2 Component Location

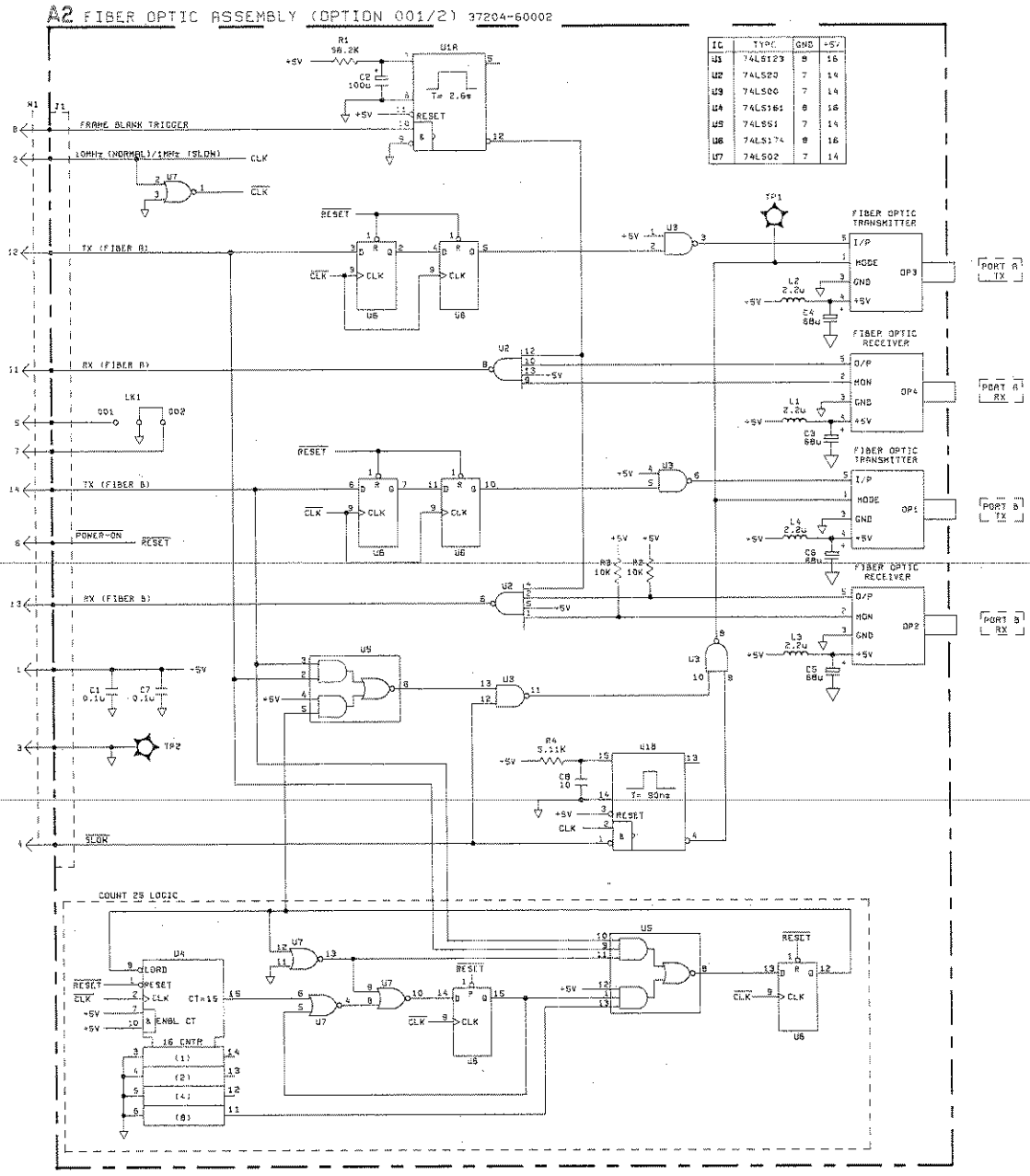

A2-2 Fiber Optic Drivers/Receivers

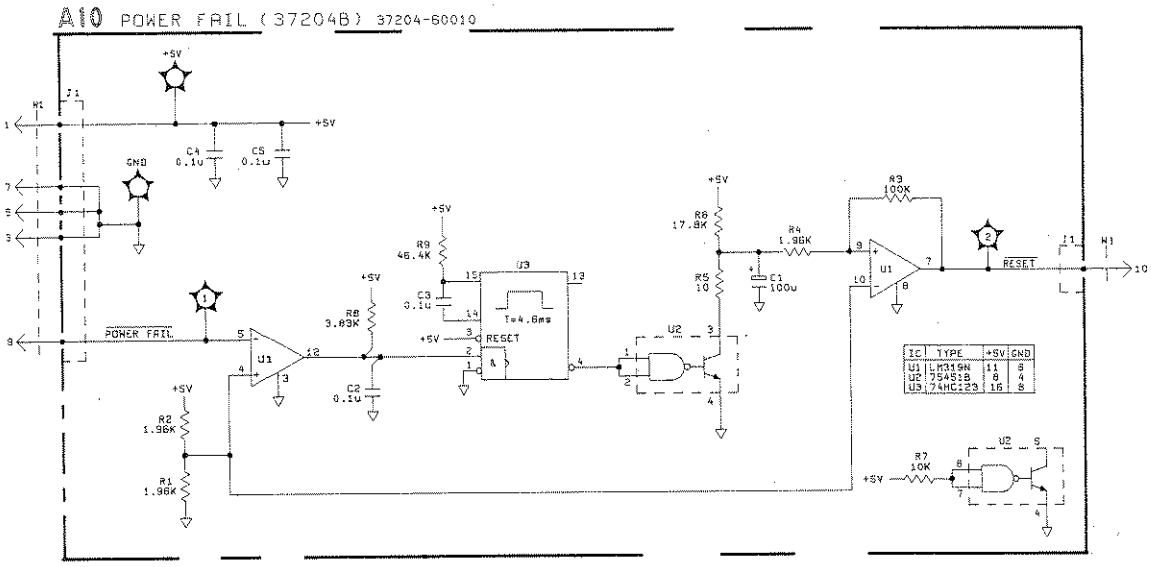

Figure A10-1 Power Fail Timer

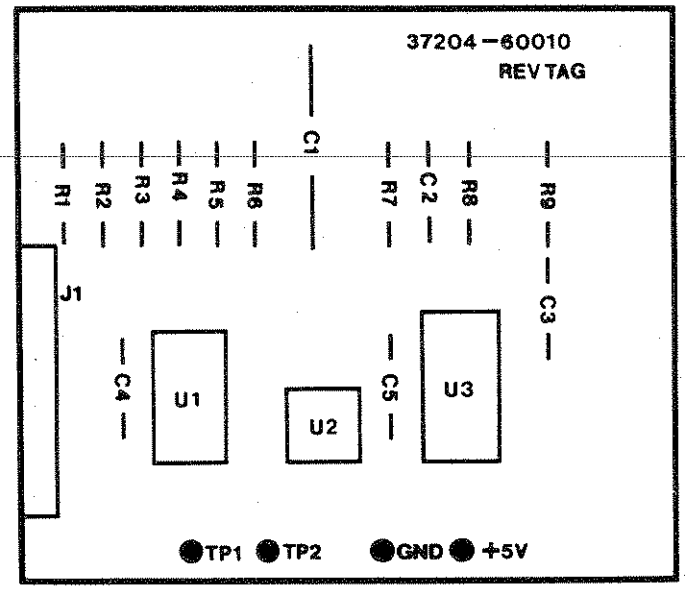

Figure A10-2 A10 Component Location

ASSEMBLY SERVICE SHEET A10
EXTENDED POWER FAIL ASSEMBLY

A10-1 Introduction

This service sheet provides component level repair information for the A10 Assembly.

A10-2 Circuit Description

The Extended Power Fail Reset Assembly (A10) ensures that if a momentary power fail (or brownout) occurs, the RESET signal remains low for between 1s and 2s.

If the signal at TP1 falls below the 2.5V threshold set by R1/R2, monostable U3 is triggered. The resulting low-going pulse at U3(4) discharges C1 through R5. When the monostable returns to its stable state, capacitor C1 recharges through R6. During the recharge period, TP2 is pulled low.

A10-3 Troubleshooting Procedure

1. Check TP1 and TP2 are >3.5V.

2. Momentarily ground TP1 (Power Fail) and check TP2 goes low for between 1 and 2s.

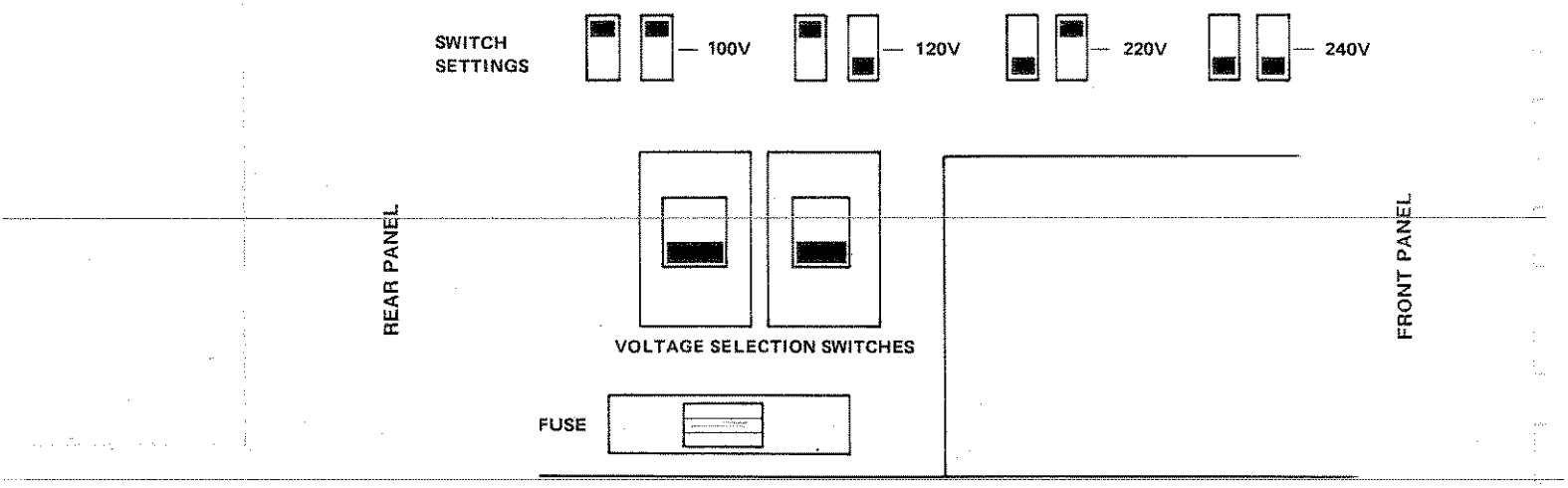

Figure A-1 Line Voltage and Fuse Selection

APPENDIX A
LINE VOLTAGE SELECTION

The ac voltage range of the 37204A/B is internally set by two switches. To change the 37204A/B voltage setting:

1. Disconnect the Extender from the ac power supply.
2. Remove the front and rear panel trims (see Figure B-1).
3. Undo 8 cross-head screws and remove the top cover.
4. Set the voltage select switches as required (see table below and Figure A-1)
5. Replace Fuse F1 with a fuse of the correct rating for the voltage range selected.
6. Mark the new voltage range setting on the rear panel above the power cord socket. You can erase the existing marking by wiping with a clean swab soaked in isopropyl alcohol.

Voltage Setting	Operating Range	Fuse	
		Rating	HP P/N
100V	90/105Vac	250mAT	2110-0201
120V	108/126Vac	250mAT	2110-0201
220V	198/231Vac	125mAT	2110-0318
240V	216/252Vac	125mAT	2110-0318

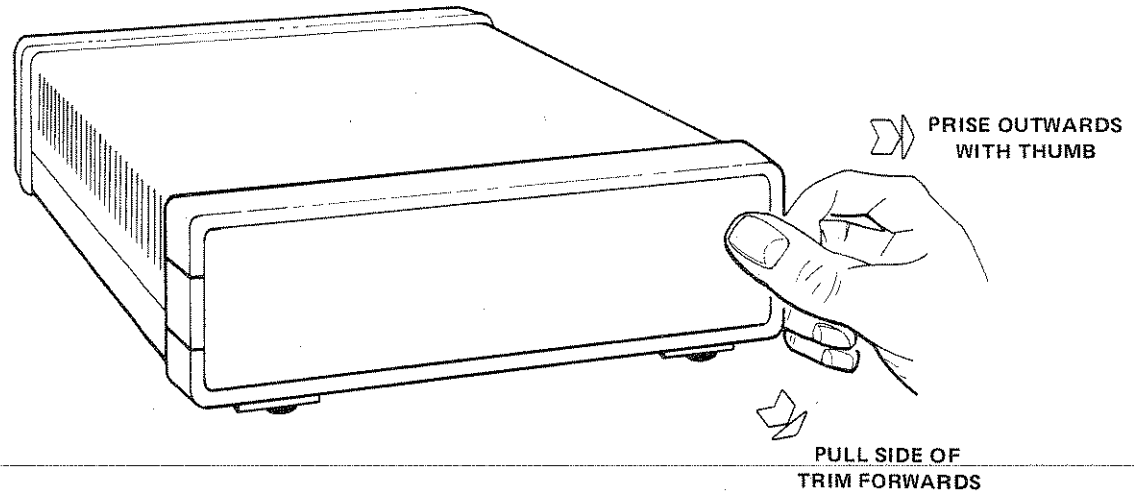

Figure B-1 Removing the Front Panel Trim

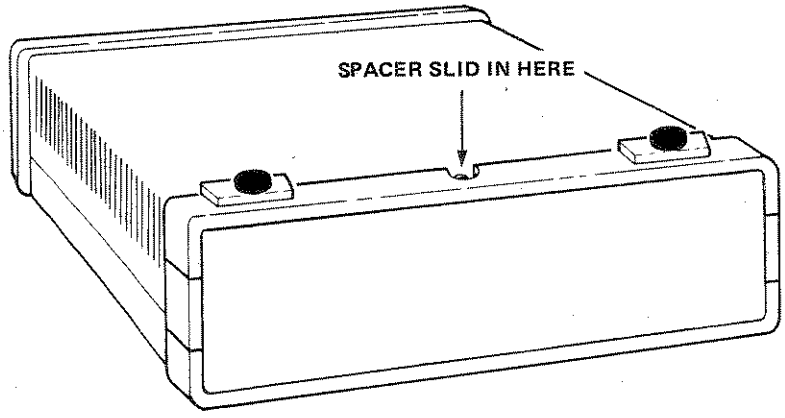

Figure B-2 Inverting the Front Panel Trim

APPENDIX B
RACK MOUNTING

Rack Mounting 37204A/B Extenders

Use kit HP Part No. 5060-4464 to mount one or two 37204A/B Extenders in a standard 19 inch rack. The kit includes a blanking panel in case only one Extender position is used.

Procedure:

1. Remove the plastic trim from the front of the Extender. Release the trim by pushing outwards on one of the sides and sliding the trim forward (Figure B-1).

2. Invert the trim so that the rubber feet are uppermost and replace the trim on the Extender (Figure B-2).

3. Hold the rack mounting panel with the two fixing holes downward and insert the front of the Extender into the cutout. Secure the Extender with two fixing screws through the bottom holes (Figure B-3).

4. Slide the spacer provided into position on the top of the Extender, and secure spacer, Extender and rack mounting panel with a fixing screw (Figure B-3).

5. Repeat for the second Extender or fit the blanking panel supplied into the unused position.

6. Fit the assembly into the rack.

DIMENSIONS

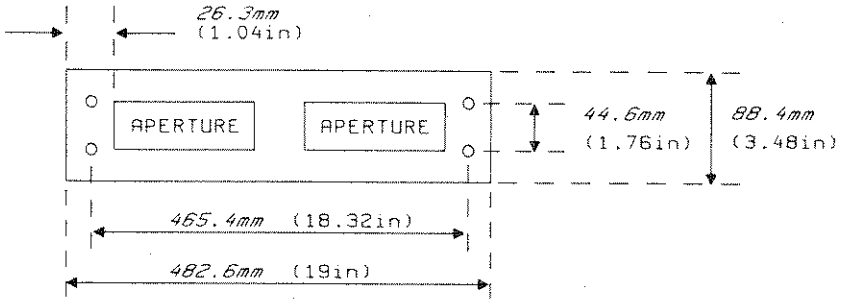

HOLES ARE OBROUND: 7.9 x 11.1mm (0.31 x 0.44in)

APERTURES ARE POSITIONED SYMETRICALLY, EACH 210 x 61mm (8.27 x 2.4in)

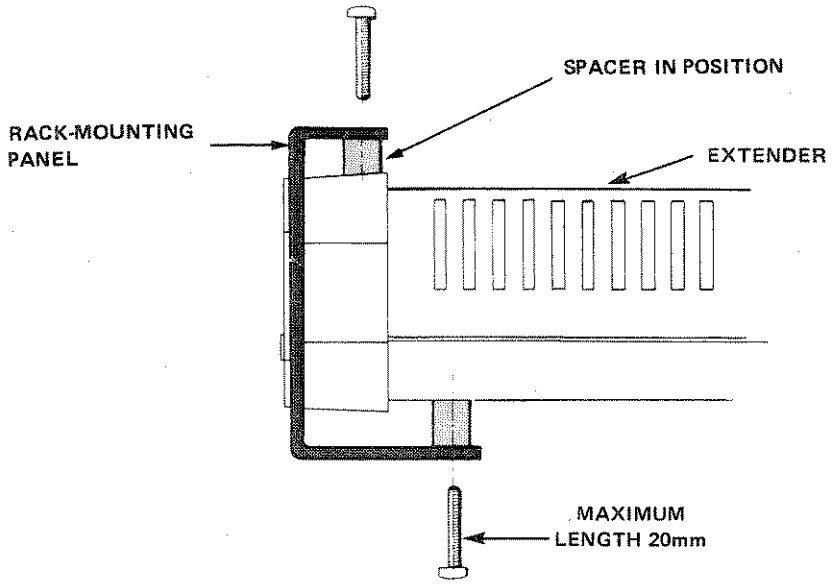

Figure B-3 Mounting in a 19 inch Rack

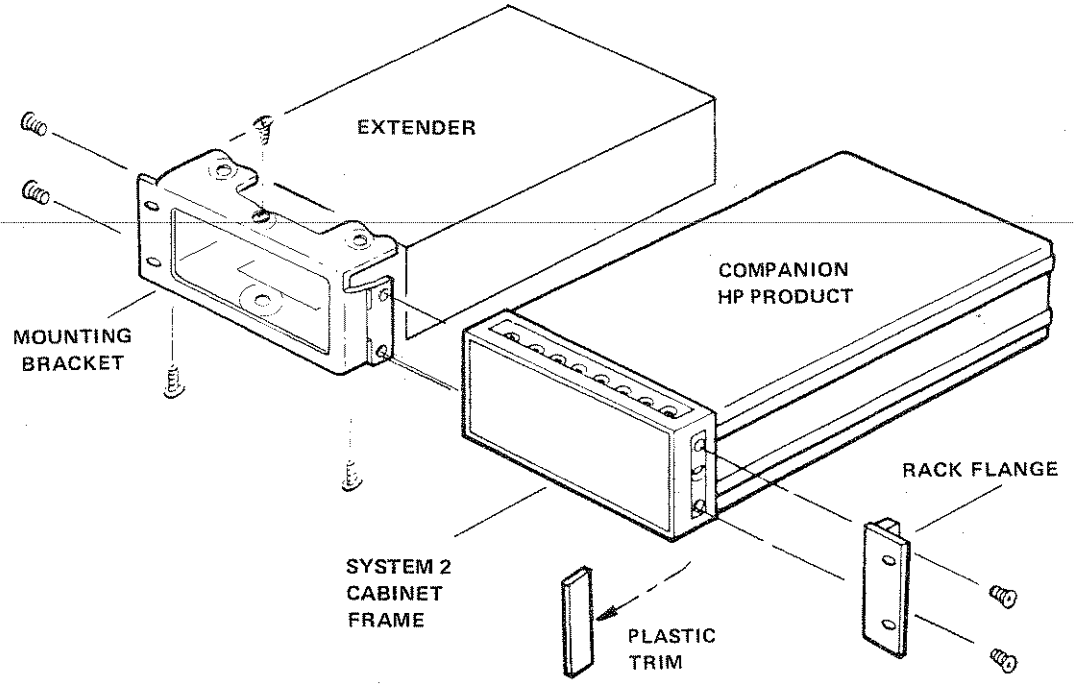

Figure B-4 System 2 Cabinet Rack Mounting

Rack Mounting With HP System 2 Cabinet Products

Use kit HP Part No. 5060-4463 to mount a single 37204A/B Extender in a standard 19 inch rack alongside a half-rack-width 3 1/2 inch high Hewlett-Packard product.

Procedure (refer to Figure B-4):

1. Remove the plastic trim from the front of the Extender. Release the trim by pushing outwards on one of the sides and sliding the trim forward (Figure B-1).

2. Invert the trim and replace it on the Extender (Figure B-2).

3. On the companion product, prize off the trim strips on both sides of the front casting and discard.

4. Use 2 screws to attach the rack flange to the side of the companion product.

5. Use 2 screws to attach the mounting bracket to the other side of the companion product.

6. Insert the Extender into the mounting bracket and secure with 3 M4X20 screws and 3 spacers, 2 screws at the bottom and 1 on the top.

7. Fit the assembly into the rack.

DIMENSIONS

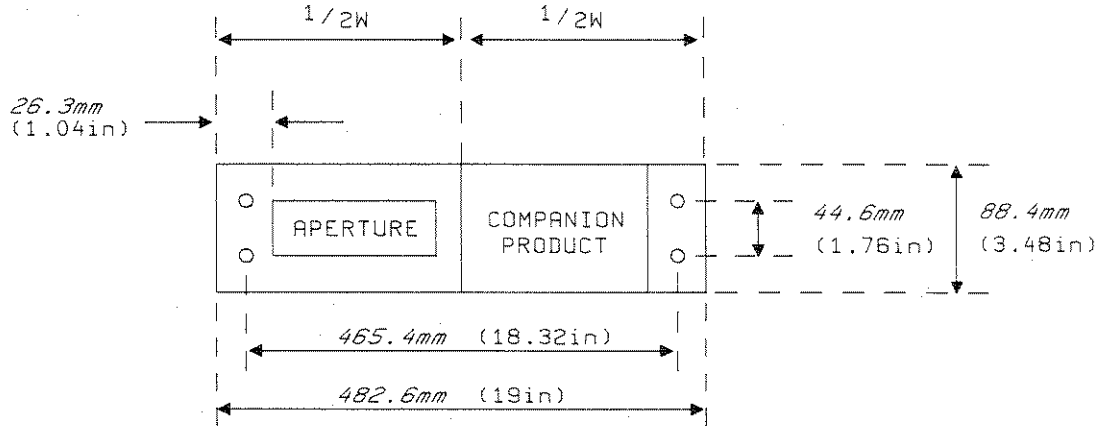

HOLES ARE OBROUND: 7.9 x 11.1mm (0.31 x 0.44in)

APERTURE: 210 X 61mm (8.27 x 2.4in)

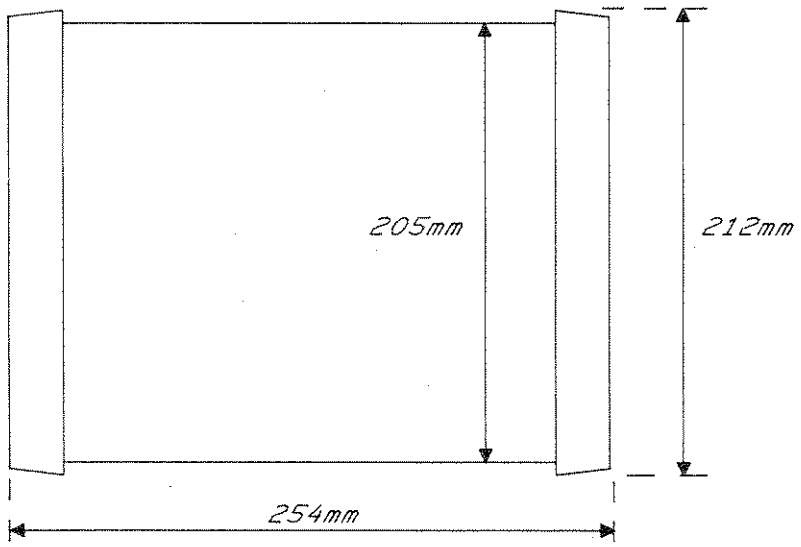

TOP

Weight:
1.72kg

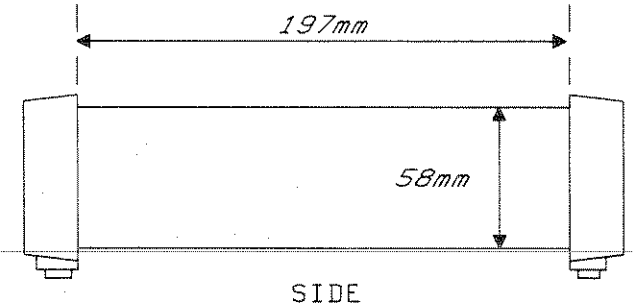

SIDE

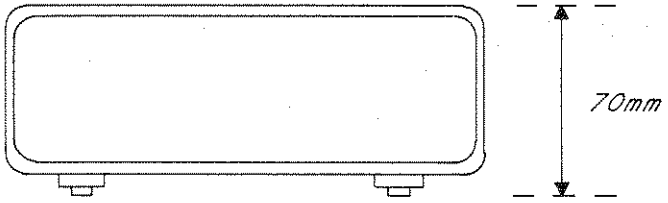

FRONT and REAR

HP 37204A/B: APPROXIMATE PHYSICAL DIMENSIONS

Product Line Sales/Support Key

Key Product Line
- **A** Analytical
- **CM** Components
- **C** Computer Systems
- **E** Electronic Instruments & Measurement Systems
- **M** Medical Products
- **P** Personal Computation Products
- ***** Sales only for specific product line
- ****** Support only for specific product line

IMPORTANT:These symbols designate general product line capability.They do not insure sales or support availability for all products within a line, at all locations.Contact your local sales office for information regarding locations where HP support is available for specific products.

HEADQUARTERS OFFICES

If there is no sales office listed for your area, contact one of these headquarters offices.

NORTH/CENTRAL AFRICA
Hewlett-Packard S.A.
7, rue du Bois-du-Lan
CH-1217 **MEYRIN** 1, Switzerland
Tel: (022) 83 12 12
Telex: 27835 hmea
Cable: HEWPACKSA Geneve

ASIA
Hewlett-Packard Asia Ltd.
47/F, 26 Harbour Rd.,
Wanchai, **HONG KONG**
G.P.O. Box 863, Hong Kong
Tel: 5-8330833
Telex: 76793 HPA HX
Cable: HPASIAL TD

CANADA
Hewlett-Packard (Canada) Ltd.
6877 Goreway Drive
MISSISSAUGA, Ontario L4V 1M8
Tel: (416) 678-9430
Telex: 069-8644

EASTERN EUROPE
Hewlett-Packard Ges.m.b.h.
Lieblgasse 1
P.O.Box 72
A-1222 **VIENNA,** Austria
Tel: (222) 2500-0
Telex: 1 3 4425 HEPA A

NORTHERN EUROPE
Hewlett-Packard S.A.
V. D. Hoopiaan 241
P.O.Box 999
NL-1183 AG **AMSTELVEEN**
The Netherlands
Tel: 20 547999
Telex: 18 919 hpner

SOUTH EAST EUROPE
Hewlett-Packard S.A.
World Trade Center
110 Avenue Louis Casai
1215 Cointrin, **GENEVA,** Switzerland
Tel: (022) 98 96 51
Telex: 27225 hpser

MEDITERRANEAN AND MIDDLE EAST
Hewlett-Packard S.A.
Mediterranean and Middle East Operations
Atrina Centre
32 Kifissias Ave.
Paradissos-Amarousion, **ATHENS**
Greece
Tel: 682 88 11
Telex: 21-6588 HPAT GR
Cable: HEWPACKSA Athens

UNITED KINGDOM
Hewlett-Packard Ltd.
Nine Mile Ride
Easthampstead, **WOKINGHAM**
Berkshire, IRGII 3LL
Tel: 0344 773100
Telex: 848805

EASTERN USA
Hewlett-Packard Co.
4 Choke Cherry Road
ROCKVILLE, MD 20850
Tel: (301) 948-6370

MIDWESTERN USA
Hewlett-Packard Co.
5201 Tollview Drive
ROLLING MEADOWS, IL 60008
Tel: (312) 255-9800

SOUTHERN USA
Hewlett-Packard Co.
2000 South Park Place
ATLANTA, GA 30339
Tel: (404) 955-1500

WESTERN USA
Hewlett-Packard Co.
5161 Lankershim Blvd.
NORTH HOLLYWOOD, CA 91601
Tel: (818) 505-5600

OTHER INTERNATIONAL AREAS
Hewlett-Packard Co.
Intercontinental Headquarters
3495 Deer Creek Road
PALO ALTO, CA 94304
Tel: (415) 857-1501
Telex: 034-8300
Cable: HEWPACK

ALGERIA
Bureau de Liaison
Hewlett-Packard Alger
Villa des Lions
9, Hai Galloul
DZ-BORDJ EL BAHRI
Tel: 76 03 36
Telex: 51260 dliondz

ANGOLA
Telectra Angola LDA
Empresa Técnica de Equipamentos
Rua Barbosa Rodrigues, 41-1 DT,
Caixa Postal 6487
LUANDA
Tel: 35515,35516
Telex: 3134
E,P

ARGENTINA
Hewlett-Packard Argentina S.A.
Montaneses 2140/50
1428 **BUENOS AIRES**
Tel: 781-4059/69
Cable: HEWPACKARG
A,C,E,P
Biotron S.A.C.I.M.e.I.
Av. Paso Colon 221, Piso 9
1399 **BUENOS AIRES**
Tel: 541-333-490,
541-322-587
Telex: 17595 BIONAR
M
Laboratorio Rodriguez
Corswant S.R.L.
Misiones, 1156 - 1876
Bernal, Oeste
BUENOS AIRES
Tel: 252-3958, 252-4991
A
Argentina Esanco S.R.L.
A/ASCO 2328
1416 **BUENOS AIRES**
Tel: 541-58-1981, 541-59-2767
Telex: c/o 9400 HPARGENTINA
A

AUSTRALIA

Adelaide, South Australia Office
Hewlett-Packard Australia Ltd.
153 Greenhill Road
PARKSIDE, S.A. 5063
Tel: 272-5911
Telex: 82536
Cable: HEWPARD Adelaide
A*,C,CM,E,P

Brisbane, Queensland Office
Hewlett-Packard Australia Ltd.
10 Payne Road
THE GAP, Queensland 4061
Tel: 30-4133
Telex: 42133
Cable: HEWPARD Brisbane
A,C,CM,E,M,P

Canberra, Australia Capital Territory Office
Hewlett-Packard Australia Ltd.
Thynne Street, Fern Hill Park
BRUCE, A.C.T. 2617
P.O. Box 257,
JAMISON, A.C.T. 2614
Tel: 51 6999
Telex: 62650
Cable: HEWPARD Canberra
C,CM,E,P

Melbourne, Victoria Office
Hewlett-Packard Australia Ltd.
31-41 Joseph Street
P.O. Box 221
BLACKBURN, Victoria 3130
Tel: 895-2895
Telex: 31-024
Cable: HEWPARD Melbourne
A,C,CM,E,M,P

Perth, Western Australia Office
Hewlett-Packard Australia Ltd.
261 Stirling Highway
CLAREMONT, W.A. 6010
Tel: 383-2188
Telex: 93859
Cable: HEWPARD Perth
C,CM,E,P

Sydney, New South Wales Office
Hewlett-Packard Australia Ltd.
17-23 Talavera Road
P.O. Box 308
NORTH RYDE, N.S.W. 2113
Tel: 888-4444
Telex: 21561
Cable: HEWPARD Sydney
A,C,CM,E,M,P

AUSTRIA
Hewlett-Packard Ges.m.b.h.
Verkaufsbuero Graz
Grottenhofstrasse 94
A-8052 **GRAZ**
Tel: (0316) 28-30-66
Telex: 312375
C,E
Hewlett-Packard Ges.m.b.h.
Lieblgasse 1
P.O. Box 72
A-1222 **VIENNA**
Tel: (0222) 2500-0
Telex: 134425 HEPA A
A,C,CM,E,M,P

BAHRAIN
Green Salon
P.O. Box 557
MANAMA
Tel: 255503-250950
Telex: 84419
P
Wael Pharmacy
P.O. Box 648
MANAMA
Tel: 256123
Telex: 8550 WAEL BN
E,M

SALES & SUPPORT OFFICES
Arranged alphabetically by country

BAHRAIN (Cont'd)
Zayani Computer Systems
218 Shaik Mubarak Building
Government Avenue
P.O. Box 5918
MANAMA
Tel: 276278
Telex: 9015 plans bn
P

BELGIUM
Hewlett-Packard Belgium S.A./N.V.
Blvd de la Woluwe, 100
Woluwedal
B-1200 **BRUSSELS**
Tel: (02) 762-32-00
Telex: 23-494 paloben bru
A,C,CM,E,M,P

BERMUDA
Applied Computer Technologies
Atlantic House Building
Par-La-Ville Road
HAMILTON 5
Tel: 295-1816
Telex: 380 3589/ACT BA
P

BOLIVIA
Arrellano Ltda
Av. 20 de Octubre #2125
Casilla 1383
LA PAZ
Tel: 368541
M

BRAZIL
Hewlett-Packard do Brasil
I.e.C. Ltda.
Alameda Rio Negro, 750
ALPHAVILLE
06400 Barueri SP
Tel: (011) 421-1311
Telex: (011) 33872 HPBR-BR
Cable: HEWPACK Sao Paulo
A,C,CM,E,M,P
Hewlett-Packard do Brasil
I.e.C. Ltda.
Praia de Botafago 228
6° Andar-conj 614
Edificio Argentina - Ala A
22250 **RIO DE JANEIRO**, RJ
Tel: (021) 552-6422
Telex: 21905 HPBR-BR
Cable: HEWPACK Rio de Janeiro
A,C,CM,E,P*
Convex/Van Den
Rua Jose Bonifacio
458 Todos Os Santos
CEP 20771
RIO DE JANEIRO, RJ
Tel: 591-0197
Telex: 33487 EGLB BR
A
ANAMED I.C.E.I. Ltda.
Rua Bage, 103
04012 **SAO PAULO**, SP
Tel: (011) 572-6537
Telex: 24720 HPBR-BR
M
Datatronix Electronica Ltda.
Av. Pacaembu 746-C11
SAO PAULO, SP
Tel: (118) 260111
CM

BRUNEI
Komputer Wisman Sdn Bhd
Room 1
3rd Floor, Tumasek Plaza
Jalan Tutong
BANDAR SERI BEGAWAN
Tel: 23918,25603
C,E,P

CAMEROON
Beriac
B. P. 23
DOUALA
Tel: 420153
Telex: 5351
C,P

CANADA

Alberta
Hewlett-Packard (Canada) Ltd.
3030 3rd Avenue N.E.
CALGARY, Alberta T2A 6T7
Tel: (403) 235-3100
A,C,CM,E*,M,P*
Hewlett-Packard (Canada) Ltd.
11120-178th Street
EDMONTON, Alberta T5S 1P2
Tel: (403) 486-6666
A,C,CM,E,M,P

British Columbia
Hewlett-Packard (Canada) Ltd.
10691 Shellbridge Way
RICHMOND,
British Columbia V6X 2W8
Tel: (604) 270-2277
Telex: 610-922-5059
A,C,CM,E*,M,P*
Hewlett-Packard (Canada) Ltd.
121 - 3350 Douglas Street
VICTORIA, British Columbia V8Z 3L1
Tel: (604) 381-6616
C

Manitoba
Hewlett-Packard (Canada) Ltd.
1825 Inkster Blvd.
WINNIPEG, Manitoba R2X 1R3
Tel: (204) 694-2777
A,C,CM,E,M,P*

New Brunswick
Hewlett-Packard (Canada) Ltd.
814 Main Street
MONCTON, New Brunswick E1C 1E6
Tel: (506) 855-2841
C

Nova Scotia
Hewlett-Packard (Canada) Ltd.
Suite 111
900 Windmill Road
DARTMOUTH, Nova Scotia B3B 1P7
Tel: (902) 469-7820
C,CM,E*,M,P*

Ontario
Hewlett-Packard (Canada) Ltd.
3325 N. Service Rd., Unit W03
BURLINGTON, Ontario L7N 3G2
Tel: (416) 335-8644
C,M*
Hewlett-Packard (Canada) Ltd.
496 Days Road
KINGSTON, Ontario K7M 5R4
Tel: (613) 384-2088
C
Hewlett-Packard (Canada) Ltd.
552 Newbold Street
LONDON, Ontario N6E 2S5
Tel: (519) 686-9181
A,C,CM,E*,M,P*
Hewlett-Packard (Canada) Ltd.
6877 Goreway Drive
MISSISSAUGA, Ontario L4V 1M8
Tel: (416) 678-9430
Telex: 069-8644
A,C,CM,E,M,P
Hewlett-Packard (Canada) Ltd.
2670 Queensview Dr.
OTTAWA, Ontario K2B 8K1
Tel: (613) 820-6483
A,C,CM,E*,M,P*
Hewlett-Packard (Canada) Ltd.
The Oaks Plaza, Unit #9
2140 Regent Street
SUDBURY, Ontario, P3E 5S8
Tel: (705) 522-0202
C
Hewlett-Packard (Canada) Ltd.
3790 Victoria Park Ave.
WILLOWDALE, Ontario M2H 3H7
Tel: (416) 499-2550
C,E

Quebec
Hewlett-Packard (Canada) Ltd.
17500 Trans Canada Highway
South Service Road
KIRKLAND, Quebec H9J 2X8
Tel: (514) 697-4232
Telex: 058-21521
A,C,CM,E,M,P*
Hewlett-Packard (Canada) Ltd.
1150 rue Claire Fontaine
QUEBEC CITY, Quebec G1R 5G4
Tel: (418) 648-0726
C
Hewlett-Packard (Canada) Ltd.
130 Robin Crescent
SASKATOON, Saskatchewan S7L 6M7
Tel: (306) 242-3702
C

CHILE
ASC Ltda.
Austria 2041
SANTIAGO
Tel: 223-5946, 223-6148
Telex: 340192 ASC CK
C,P
Jorge Calcagni y Cia
Av. Italia 634 Santiago
Casilla 16475
SANTIAGO 9
Tel: 222-0222
Telex: 440283 JCYCL CZ
CM,E,M
Metrolab S.A.
Monjitas 454 of. 206
SANTIAGO
Tel: 395752, 398296
Telex: 340866 METLAB CK
A
Olympia (Chile) Ltda.
Av. Rodrigo de Araya 1045
Casilla 256-V
SANTIAGO 21
Tel: 225-5044
Telex: 340892 OLYMP
Cable: Olympiachile Santiagochile
C,P

CHINA, People's Republic of
China Hewlett-Packard Co., Ltd.
47/F China Resources Bldg.
26 Harbour Road
HONG KONG
Tel: 5-8330833
Telex: 76793 HPA HX
Cable: HP ASIA LTD
A*,M*
China Hewlett-Packard Co., Ltd.
P.O. Box 9610, Beijing
4th Floor, 2nd Watch Factory Main Bldg.
Shuang Yu Shou, Bei San Huan Road
Hai Dian District
BEIJING
Tel: 28-0567
Telex: 22601 CTSHP CN
Cable: 1920 Beijing
A,C,CM,E,M,P
China Hewlett-Packard Co., Ltd.
CHP Shanghai Branch
23/F Shanghai Union Building
100 Yan An dong Lu
SHANG-HAI
Tel: 265550
Telex: 33571 CHPSB CN
Cable: 3416 Shanghai
A,C,CM,E,M,P

COLOMBIA
Instrumentación
H. A. Langebaek & Kier S.A.
Carrerra 4A No. 52A-26
Apartado Aereo 6287
BOGOTA 1, D.E.
Tel: 212-1466
Telex: 44400 INST CO
Cable: AARIS Bogota
CM,E,M
Nefromedicas Ltda.
Calle 123 No. 9B-31
Apartado Aereo 100-958
BOGOTA D.E., 10
Tel: 213-5267, 213-1615
Telex: 43415 HEGAS CO
A
Compumundo
Avenida 15 # 107-80
BOGOTA D.E.
Tel: 214-4458
Telex: 45466 SUMA CO
P
Carvajal, S.A.
Calle 29 Norte No. 6A-40
Apartado Aereo 46
CALI
Tel: 368-1111
Telex: 55650
C,E,P

CONGO
Seric-Congo
B. P. 2105
BRAZZAVILLE
Tel: 815034
Telex: 5262

COSTA RICA
Cientifica Costarricense S.A.
Avenida 2, Calle 5
San Pedro de Montes de Oca
Apartado 10159
SAN JOSE
Tel: 24-38-20, 24-08-19
Telex: 2367 GALGUR CR
CM,E,M

O. Fischel R. Y. Cia. S.A.
Apartados 434-10174
SAN JOSE
Tel: 23-72-44
Telex: 2379
Cable: OFIR
A

CYPRUS
Telerexa Ltd.
P.O. Box 1152
7 A Afroditis Avenue
NICOSIA
Tel: 45 628, 62 698
Telex: 2894 LEVIDO CY
E,M,P

DENMARK
Hewlett-Packard A/S
Kongevejen 25
DK-3460 **BIRKEROED**
Tel: (02) 81-66-40
Telex: 37409 hpas dk
A,C,CM,E,M,P

Hewlett-Packard A/S
Rolighedsvej 32
DK-8240 **RISSKOV**, Aarhus
Tel: (06) 17-60-00
Telex: 37409 hpas dk
C,E

DOMINICAN REPUBLIC
Microprog S.A.
Juan Tomás Mejía y Cotes No. 60
Arroyo Hondo
SANTO DOMINGO
Tel: 565-6268
Telex: 4510 ARENTA DR (RCA)
P

ECUADOR
CYEDE Cia. Ltda.
Avenida Eloy Alfaro 1749
y Belgica
Casilla 6423 CCI
QUITO
Tel: 245-0975, 243-052
Telex: 22548 CYEDE ED
E,P

Medtronics
Valladolid 524 Madrid
P.O. 9171, **QUITO**
Tel: 2-238-951
Telex: 2298 ECUAME ED
A

Hospitalar S.A.
Robles 625
Casilla 3590
QUITO
Tel: 545-250, 545-122
Telex: 2485 HOSPTL ED
Cable: HOSPITALAR-Quito
M

Ecuador Overseas Agencies C.A.
Calle 9 de Octubre #818
P.O. Box 1296, Guayaquil
QUITO
Tel: 306022
Telex: 3361 PBCGYE ED
M

EGYPT
Sakrco Enterprises
P.O. Box 259
ALEXANDRIA
Tel: 802908, 808020, 805302
Telex: 54333
C

International Engineering Associates
24 Hussein Hegazi Street
Kasr-el-Aini
CAIRO
Tel: 23829, 21641
Telex: 93830 IEA UN
Cable: INTEGASSO
E

Sakrco Enterprises
70 Mossadak Street
Dokki, Giza
CAIRO
Tel: 706 440, 701 087
Telex: 9337
C

S.S.C. Medical
40 Gezerat El Arab Street
Mohandessin
CAIRO
Tel: 803844, 805998, 810263
Telex: 20503 SSC UN
M*

EL SALVADOR
IPESA de El Salvador S.A.
29 Avenida Norte 1223
SAN SALVADOR
Tel: 26-6858, 26-6868
Telex: 301 20539 IPESA SAL
A,C,CM,E,P

ETHIOPIA
Seric-Ethiopia
P.O. Box 2784
ADDIS ABABA
Tel: 185114
Telex: 21150
C,P

FINLAND
Hewlett-Packard Oy
Piispankalliontie 17
02200 **ESPOO**
Tel: 00358-0-88721
Telex: 121563 HEWPA SF
C,CM,P

FRANCE
Hewlett-Packard France
Z.I. Mercure B
Rue Berthelot
13763 Les Milles Cedex
AIX-EN-PROVENCE
Tel: (42) 59-41-02
Telex: 410770F
A,C,E,M

Hewlett-Packard France
64, Rue Marchand Salliant
61000 **ALENCON**
Tel: (33) 29 04 42
C**

Hewlett-Packard France
Batiment Levitan
2565, route de Grasse
Bretelle Autoroute
06600 **ANTIBES**
Tel: (93) 74-59-19
C

Hewlett-Packard France
28 Rue de la République
Boite Postale 503
25026 **BESANÇON**
Tel: (81) 83-16-22
Telex: 361157
C,E*

Hewlett-Packard France
13 Place Napoléon III
29000 **BREST**
Tel: (98) 41-87-90
E

Hewlett-Packard France
Chemin des Mouilles
Boite Postale 162
69131 **ECULLY** Cedex (Lyon)
Tel: (78) 133-81-25
Telex: 310617F
A,C,E,M,P*

Hewlett-Packard France
Parc d'activités du Bois Briard
Avenue du Lac
91040 **EVRY** Cedex
Tel: (60) 77-83-83
Telex: 692315F
C

Hewlett-Packard France
5, avenue Raymond Chanas
38320 **EYBENS** (Grenoble)
Tel: (76) 62-57-98
Telex: 980124 HP GRENOB EYBE
C

Hewlett-Packard France
Rue Fernand. Forest
Z.A. Kergaradec
29239 **GOUESNOU**
Tel: (98) 41-87-90

Hewlett-Packard France
Parc Club des Tanneries
Batiment B4
4, Rue de la Faisanderie
67380 **LINCOLSHEIM**
(Strasbourg)
Tel: (88) 76-15-00
Telex: 890141F
C,E*,M*,P*

Hewlett-Packard France
Centre d'affaires Paris-Nord
Bâtiment Ampère
Rue de la Commune de Paris
Boite Postale 300
93153 **LE BLANC-MESNIL**
Tel: (1) 865-44-52
Telex: 211032F
C,E,M

Hewlett-Packard France
Parc d'activités Cadéra
Quartier Jean-Mermoz
Avenue du Président JF Kennedy
33700 **MÉRIGNAC** (Bordeaux)
Tel: (56) 34-00-84
Telex: 550105F
C,E,M

Hewlett-Packard France
3, Rue Graham Bell
BP 5149
57074 **METZ** Cedex
Tel: (87) 36-13-31
Telex: 860602F
C,E

Hewlett-Packard France
Miniparc-ZIRST
Chemin du Vieux Chêne
38240 **MEYLAN** (Grenoble)
Tel: (76) 90-38-40
C

Hewlett-Packard France
Bat.A l'Erable
Bureau vert du Bois Briand
44085 **NANTES** Cedex
Tel: (40) 50-32-22
Telex: 711085F
A,C,E,CM*,P

Hewlett-Packard France
125, Rue du Faubourg Bannier
45000 **ORLEANS**
Tel: (38) 62-20-31
E,P*

Hewlett-Packard France
Zone Industrielle de Courtaboeuf
Avenue des Tropiques
91947 **LES ULIS** Cedex (Orsay)
Tel: (69) 07-78-25
Telex: 600048F
A,C,CM,E,M,P**

Hewlett-Packard France
15, Avenue de L'Amiral-Bruix
75782 **PARIS** Cedex 16
Tel: (1) 45-02-75-00
Telex: 613663F
C,P*

Hewlett-Packard France
124, Boulevard Tourasse
64000 **PAU**
Tel: (59) 80-38-02
Telex: 550365F
C,E*

Hewlett-Packard France
6, Place Sainte Croix
86000 **POITIERS**
Tel: (49) 41-27-07
Telex: 792335F
C, E*

SALES & SUPPORT OFFICES
Arranged alphabetically by country

FRANCE (Cont'd)
Hewlett-Packard France
47, Rue de Chativesle
51100 **REIMS**
Tel: (26) 88-69-79
C, P*

Hewlett-Packard France
Parc d'activités de la Poterie
Rue Louis Kerautel-Botmel
35000 **RENNES**
Tel: (99) 51-42-44
Telex: 740912F
A*,C,E,M,P*

Hewlett-Packard France
98 Avenue de Bretagne
76100 **ROUEN**
Tel: (35) 63-57-66
Telex: 770035F
C,E

Hewlett-Packard France
4, Rue Thomas-Mann
Boite Postale 56
67033 **STRASBOURG** Cedex
Tel: (88) 28-56-46
Telex: 890141F
C,E,M,P*

Hewlett-Packard France
Le Péripole
3, Chemin du Pigeonnier de la Cépière
3108 **TOULOUSE** Cedex
Tel: (61) 40-11-12
Telex: 531639F
A,C,E,M,P*

Hewlett-Packard France
Les Cardoulines
Batiment B2
Route des Dolines
Parc d'activite de Valbonne
Sophia Antipolis
06560 **VALBONNE** (Nice)
Tel: (93) 65-39-40
C

Hewlett-Packard France
9, Rue Baudin
26000 **VALENCE**
Tel: (75) 42-76-16
C**

Hewlett-Packard France
Carolor
ZAC de Bois Briand
57640 **VIGY** (Metz)
Tel: (8) 771 20 22
C

Hewlett-Packard France
Parc d'activité des Prés
1, Rue Papin
59658 **VILLENEUVE D'ASCQ** Cedex
Tel: (20) 47 78 78
Telex: 160124F
C,E,M,P

Hewlett-Packard France
Parc d'activités Paris-Nord 11
45, Rue des 3 Soeurs
93420 **VILLEPINTE**
Tel: (1) 48 63 80 80
Telex: 211032F
C,E,M,P*

GABON
Sho Gabon
P.O. Box 89
LIBREVILLE
Tel: 721 484
Telex: 5230

GERMAN FEDERAL REPUBLIC
Hewlett-Packard GmbH
Vertriebszentrum Mitte
Hewlett-Packard-Strasse
D-6380 **BAD HOMBURG**
Tel: (06172) 400-0
Telex: 410 844 hpbhg
A,C,E,M,P

Hewlett-Packard GmbH
Geschäftsstelle
Keithstrasse 2-4
D-1000 **BERLIN** 30
Tel: (030) 21 99 04-0
Telex: 018 3405 hpbln d
A,C,E,M,P

Hewlett-Packard GmbH
Vertriebszentrun Südwest
Schickardstrasse 2
D-7030 **BOBLINGEN**
Tel: (07031) 645-0
Telex: 7265 743 hep
A,C,CM,E,M,P

Hewlett-Packard GmbH
Geschäftsstelle
Schleefstr. 28a
D-4600 **DORTMUND-41**
Tel: (0231) 45001
Telex: 822858 hepdad
A,C,E

Hewlett-Packard GmbH
Vertriebszentrum Nord
Kapstadtring 5
D-2000 **HAMBURG** 60
Tel: (040) 63804-1
Telex: 021 63 032 hphh d
A,C,E,M,P

Hewlett-Packard GmbH
Geschäftsstelle
Heidering 37-39
D-3000 **HANNOVER** 61
Tel: (0511) 5706-0
Telex: 092 3259
A,C,CM,E,M,P

Hewlett-Packard GmbH
Geschäftsstelle
Rosslauer Weg 2-4
D-6800 **MANNHEIM**
Tel: (0621) 70 05-0
Telex: 0462105
A,C,E

Hewlett-Packard GmbH
Geschäftsstelle
Messerschmittstrasse 7
D-7910 **NEU ULM**
Tel: (0731) 70 73-0
Telex: 0712816 HP ULM-D
A,C,E*

Hewlett-Packard GmbH
Geschäftsstelle
Emmericher Strasse 13
D-8500 **NÜRNBERG** 10
Tel: (0911) 5205-0
Telex: 0623 860 hpnbg
C,CM,E,M,P

Hewlett-Packard GmbH
Vertriebszentrum West
Berliner Strasse 111
D-4030 **RATINGEN** 3
Tel: (02102) 494-0
Telex: 589 070 hprad
A,C,E,M,P

Hewlett-Packard GmbH
Vertriebszentrum Süd
Eschenstrasse 5
D-8028 **TAUFKIRCHEN**
Tel: (089) 61 20 7-0
Telex: 0524985
A,C,CM,E,M,P

Hewlett-Packard GmbH
Geschäftsstelle
Ermlisallee
7517 **WALDBRONN** 2
Tel: (07243) 602-0
Telex: 782 838 hepk
A,C,E

GREAT BRITAIN
See United Kingdom

GREECE
Hewlett-Packard A.E.
178, Kifissias Avenue
6th Floor
Halandri-**ATHENS**
Greece
Tel: 6471543, 6471673, 6472971
Telex: 221 286 HPHLGR
A,C,CM**,E,M,P

Kostas Karaynnis S.A.
8, Omirou Street
ATHENS 133
Tel: 32 30 303, 32 37 371
Telex: 215962 RKAR GR
A,C*,CM,E

Impexin
Intelect Div.
209 Mesogion
11525 **ATHENS**
Tel: 6474481/2
Telex: 216286
P

Harli Company
38, Mihalakopouiou
ATHENS 612
Tel: 7236071
Telex: 218767
M*

Hellamco
P.O. Box 87528
18507 **PIRAEUS**
Tel: 4827049
Telex: 241441
A

GUATEMALA
IPESA
Avenida Reforma 3-48, Zona 9
GUATEMALA CITY
Tel: 316627, 317853,65471/5
Telex: 3055765 IPESA GU
A,C,CM,E,M,P

HONG KONG
Hewlett-Packard Hong Kong, Ltd.
G.P.O. Box 795
5th Floor, Sun Hung Kai Centre
30 Harbour Road
HONG KONG
Tel: 5-8323211
Telex: 66678 HEWPA HX
Cable: HEWPACK HONG KONG
E,C,P

CET Ltd.
10th Floor, Hua Asia Bldg.
64-66 Gloucester Road
HONG KONG
Tel: (5) 200922
Telex: 85148 CET HX
CM

Schmidt & Co. (Hong Kong) Ltd.
18th Floor, Great Eagle Centre
23 Harbour Road, Wanchai
HONG KONG
Tel: 5-8330222
Telex: 74766 SCHMC HX
A,M

ICELAND
Hewlett-Packard Iceland
Hoefdabakka 9
110 **REYKJAVIK**
Tel: (1) 67 1000
A,C,CM,E,M,P

INDIA
Computer products are sold through Blue Star Ltd.All computer repairs and maintenance service is done through Computer Maintenance Corp.

Blue Star Ltd.
B. D. Patel House
Near Sardar Patel Colony
AHMEDABAD 380 014
Tel: 403531, 403532
Telex: 0121-234
Cable: BLUE FROST
A,C,CM,E

Blue Star Ltd.
40/4 Lavelle Road
BANGALORE 560 001
Tel: 57881, 567780
Telex: 0845-430
Cable: BLUESTAR
A,C*,CM,E

Blue Star Ltd.
Band Box House
Prabhadevi
BOMBAY 400 025
Tel: 4933101, 4933222
Telex: 011-71051
Cable: BLUESTAR
A,M

Blue Star Ltd.
Sahas
414/2 Vir Savarkar Marg
Prabhadevi
BOMBAY 400 025
Tel: 430-6155, 430-6556
Telex: 011-71193 BSSS IN
Cable: FROSTBLUE
A,CM,E,M

Blue Star Ltd.
Kalyan, 19 Vishwas Colony
Alkapuri, **BORODA**, 390 005
Tel: 65235, 65236
Cable: BLUE STAR
A
Blue Star Ltd.
7 Hare Street
CALCUTTA 700 001
Tel: 230131, 230132
Telex: 031-61120 BSNF IN
Cable: BLUESTAR
A,M,C,E
Blue Star Ltd.
133 Kodambakkam High Road
MADRAS 600 034
Tel: 472056, 470238
Telex: 041-379
Cable: BLUESTAR
A,M
Blue Star Ltd.
13 Community Center
New Friends Colony
NEW DELHI 110 065
Tel: 633182, 636674
Telex: 031-61120
Cable: BLUEFROST
A,C*,CM,E,M
Blue Star Ltd.
15/16 C Wellesley Rd.
PUNE 411 011
Tel: 22775
Cable: BLUE STAR
A
Blue Star Ltd.
2-2-47/1108 Bolarum Rd.
SECUNDERABAD 500 003
Tel: 72057, 72058
Telex: 0155-459
Cable: BLUEFROST
A,C,E
Blue Star Ltd.
T.C. 7/603 Poornima
Maruthunkuzhi
TRIVANDRUM 695 013
Tel: 65799, 65829
Telex: 0884-259
Cable: BLUESTAR
E
Computer Maintenance Corporation Ltd.
115, Sarojini Devi Road
SECUNDERABAD 500 003
Tel: 310-184, 345-774
Telex: 031-2950
C**

INDONESIA

BERCA Indonesia P.T.
P.O.Box 496/Jkt.
Jl. Abdul Muis 62
JAKARTA
Tel: 21-373009
Telex: 46748 BERSAL IA
Cable: BERSAL JAKARTA
P
BERCA Indonesia P.T.
P.O.Box 2497/Jkt
Antara Bldg., 11th Floor
Jl. Medan Merdeka Selatan 17
JAKARTA-PUSAT
Tel: 343989
Telex: 46748 BERSAL IA
A,C,E,M,P
BERCA Indonesia P.T.
Jalan Kutai 24
SURABAYA
Tel: 67118
Telex: 31146 BERSAL SB
Cable: BERSAL-SURABAYA
A*,E,M,P

IRAQ

Hewlett-Packard Trading S.A.
Service Operation
Al Mansoor City 9B/3/7
BAGHDAD
Tel: 551-49-73
Telex: 212-455 HEPAIRAQ IK
C

IRELAND

Hewlett-Packard Ireland Ltd.
82/83 Lower Leeson Street
DUBLIN 2
Tel: 0001 608800
Telex: 30439
C,E,P
Cardiac Services Ltd.
128 Dublin Industrial Estate
DUBLIN 11
Tel: (01) 307499
Telex: 32254
M

ISRAEL

Eldan Electronic Instrument Ltd.
P.O.Box 1270
JERUSALEM 91000
16, Ohaliav St.
JERUSALEM 94467
Tel: 533 221, 553 242
Telex: 25231 AB/PAKRD IL
A,M
Computation and Measurement Systems (CMS) Ltd.
11 Masad Street
67060
TEL-AVIV
Tel: 388 388
Telex: 33569 Motil IL
C,CM,E,P

ITALY

Hewlett-Packard Italiana S.p.A
Traversa 99C
Via Giulio Petroni, 19
I-70124 **BARI**
Tel: (080) 41-07-44
C,M
Hewlett-Packard Italiana S.p.A.
Via Emilia, 51/C
I-40011 **BOLOGNA** Anzola Dell'Emilia
Tel: (051) 731051
Telex: 511630
C,E,M
Hewlett-Packard Italiana S.p.A.
Via Principe Nicola 43G/C
I-95126 **CATANIA**
Tel: (095) 37-10-87
Telex: 970291
C
Hewlett-Packard Italiana S.p.A.
Via G. di Vittorio 9
20094 **CORSICO** (Milano)
Tel: (02) 448351
Hewlett-Packard Italiana S.p.A.
Viale Brigata Bisagno 2
16129 **GENOVA**
Tel: (010) 541141
Hewlett-Packard Italiana S.p.A.
Viale G. Modugno 33
I-16156 **GENOVA PEGLI**
Tel: (010) 68-37-07
Telex: 215238
C,E
Hewlett-Packard Italiana S.p.A.
Via G. di Vittorio 9
I-20063 **CERNUSCO SUL NAVIGLIO**
(Milano)
Tel: (02) 923691
Telex: 334632
A,C,CM,E,M,P
Hewlett-Packard Italiana S.p.A.
Via Nuova Rivoltana 95
20090 **LIMITO** (Milano)
Tel: (02) 92761
Hewlett-Packard Italiana S.p.A.
Via Nuova San Rocco a
Capodimonte, 62/A
I-80131 **NAPOLI**
Tel: (081) 7413544
Telex: 710698
A**,C,E,M
Hewlett-Packard Italiana S.p.A.
Via Orazio 16
80122 **NAPOLI**
Tel: (081) 7611444
Hewlett-Packard Italiana S.p.A.
Via Pellizzo 15
35128 **PADOVA**
Tel: (049) 8070166
Telex: 430315
A,C,E,M
Hewlett-Packard Italiana S.p.A.
Viale C. Pavese 340
I-00144 **ROMA EUR**
Tel: (06) 54831
Telex: 610514
A,C,E,M,P*
Hewlett-Packard Italiana S.p.A.
Via di Casellina 57/C
I-50018 **SCANDICCI-FIRENZE**
Tel: (055) 753863
C,E,M
Hewlett-Packard Italiana S.p.A.
Corso Svizzera, 185
I-10144 **TORINO**
Tel: (011) 74 4044
Telex: 221079
A*,C,E

IVORY COAST

S.I.T.E.L.
Societe Ivoirienne de Telecommunications
Bd. Giscard d'Estaing
Carrefour Marcory
Zone 4.A.
Boite postale 2580
ABIDJAN 01
Tel: 353600
Telex: 43175
E
S.I.T.I.
Immeuble "Le General"
Av. du General de Gaulle
01 BP 161
ABIDJAN 01
Tel: 321227
C,P

JAPAN

Yokogawa-Hewlett-Packard Ltd.
152-1, Onna
ATSUGI, Kanagawa, 243
Tel: (0462) 25-0031
C,CM,E
Yokogawa-Hewlett-Packard Ltd.
Meiji-Seimei Chiba Bldg.
3-1 Hon Chiba-Cho
CHIBA, 280
Tel: (0472) 25 7701
C,E
Yokogawa-Hewlett-Packard Ltd.
Yasuda-Seimei Hiroshima Bldg.
6-11, Hon-dori, Naka-ku
HIROSHIMA, 730
Tel: (082) 241-0611
Yokogawa-Hewlett-Packard Ltd.
Towa Building
2-3, Kaigan-dori, 2 Chome Chuo-ku
KOBE, 650
Tel: (078) 392-4791
C,E
Yokogawa-Hewlett-Packard Ltd.
Kumagaya Asahi 82 Bldg.
3-4 Tsukuba
KUMAGAYA, Saitama 360
Tel: (0485) 24-6563
C,CM,E
Yokogawa-Hewlett-Packard Ltd.
Asahi Shinbun Daiichi Seimei Bldg.
4-7, Hanabata-cho
KUMAMOTO, 860
Tel: (0963) 54-7311
C,E
Yokogawa-Hewlett-Packard Ltd.
Shin-Kyoto Center Bldg.
614, Higashi-Shiokoji-cho
Karasuma-Nishiiru
Shiokoji-dori, Shimogyo-ku
KYOTO, 600
Tel: 075-343-0921
C,E
Yokogawa-Hewlett-Packard Ltd.
Mito Mitsui Bldg.
4-73, Sanno-maru, 1 Chome
MITO, Ibaraki 310
Tel: (0292) 25-7470
C,CM,E

SALES & SUPPORT OFFICES
Arranged alphabetically by country

JAPAN (Cont'd)
Yokogawa-Hewlett-Packard Ltd.
Meiji-Seimei Kokubun Bldg.
7-8 Kokubun, 1 Chome, Sendai
MIYAGI, 980
Tel: (0222) 25-1011
C,E
Yokogawa-Hewlett-Packard Ltd.
Gohda Bldg. 2F
2-10 Gohda 1 Chome
Okaya-Shi
NAGANO, 394
Tel: (0266) 23 0851
C,E
Yokogawa-Hewlett-Packard Ltd.
Nagoya Kokusai Center Building
47-1, Nagono, 1 Chome
Nakamura-ku
NAGOYA, 450
Tel: (052) 571-5171
C,CM,E,M
Yokogawa-Hewlett-Packard Ltd.
Sai-Kyo-Ren Building
1-2 Dote-cho
OMIYA OMIYA, Saitama 330
Tel: (0486) 45-8031
Yokogawa-Hewlett-Packard Ltd.
Chuo Bldg.,
4-20 Nishinakajima, 5 Chome
Yodogawa-ku
OSAKA, 532
Tel: (06) 304-6021
Telex: YHPOSA 523-3624
C,CM,E,M,P*
Yokogawa-Hewlett-Packard Ltd.
27-15, Yaba, 1 Chome
SAGAMIHARA Kanagawa, 229
Tel: 0427 59-1311
Yokogawa-Hewlett-Packard Ltd.
Motoshiro-cho Dai-ich Seimei Bldg. 1F
219-21 Motoshiro-cho,
Hamamatsu-shi
SHIZUOKA, 430
Tel: (0534) 56 1771
C,E
Yokogawa-Hewlett-Packard Ltd.
Daiichi Seimei Bldg.
7-1, Nishi Shinjuku, 2 Chome
Shinjuku-ku,**TOKYO** 160
Tel: 03-348-4611
C,E,M
Yokogawa Hewlett-Packard Ltd.
9-1, Takakura-cho
Hachioji-shi, **TOKYO**, 192
Tel: 0426-42-1261
C,E
Yokogawa-Hewlett-Packard Ltd.
29-21 Takaido-Higashi, 3 Chome
Suginami-ku **TOKYO** 168
Tel: (03) 331-6111
Telex: 232-2024 YHPTOK
C,CM,E,P*
Yokogawa Hokushin Electric
Corporation
Shinjuku-NS Bldg. 10F
4-1 Nishi-Shinjuku 2-Chome
Shinjuku-ku
TOKYO, 163
Tel: (03) 349-1859
Telex: J27584
A
Yokogawa Hokushin Electric Corp.
9-32 Nokacho 2 Chome
2 Chome Musashino-shi
TOKYO, 180
Tel: (0422) 54-1111
Telex: 02822-421 YEW MTK J
A
Yokogawa-Hewlett-Packard Ltd.
Meiji-Seimei
Utsunomiya Oodori Building
1-5 Oodori, 2 Chome
UTSUNOMIYA, Tochigi 320
Tel: (0286) 33-1153
C,E
Yokogawa-Hewlett-Packard Ltd.
Yasuda Seimei Nishiguchi Bldg.
30-4 Tsuruya-cho, 3 Chome
Kanagawa-ku, **YOKOHAMA** 221
Tel: (045) 312-1252
C,CM,E

JORDAN
Scientific and Medical Supplies Co.
P.O. Box 1387
AMMAN
Tel: 24907, 39907
Telex: 21456 SABCO JO
C,E,M,P

KENYA
ADCOM Ltd., Inc., Kenya
P.O.Box 30070
NAIROBI
Tel: 331955
Telex: 22639
E,M

KOREA
Samsung Hewlett-Packard Co. Ltd.
Dongbang Yeoeuido Building
12-16th Floors
36-1 Yeoeuido-Dong
Youngdeungpo-Ku
SEOUL
Tel: 784-4666, 784-2666
Telex: 25166 SAMSAN K
C,CM,E,M,P
Young In Scientific Co., Ltd.
Youngwha Building
547 Shinsa Dong, Kangnam-Ku
SEOUL 135
Tel: 546-7771
Telex: K23457 GINSCO
A
Dongbang Healthcare
Products Co. Ltd.
Suite 301 Medical Supply Center
Bldg. 1-31 Dongsungdong
Jong Ro-gu, **SEOUL**
Tel: 764-1171, 741-1641
Telex: K25706 TKBKO
Cable: TKBEEPKO
M

KUWAIT
Al-Khaldiya Trading & Contracting
P.O. Box 830
SAFAT
Tel: 424910, 411726
Telex: 22481 AREEG KT
Cable: VISCOUNT
E,M,A
Gulf Computing Systems
P.O. Box 25125
SAFAT
Tel: 435969
Telex: 23648
P
Photo & Cine Equipment
P.O. Box 270
SAFAT
Tel: 2445111
Telex: 22247 MATIN KT
Cable: MATIN KUWAIT
P
W.J. Towell Computer Services
P.O. Box 5897
SAFAT
Tel: 2462640/1
Telex: 30336 TOWELL KT
C

LEBANON
Computer Information Systems S.A.L.
Chammas Building
P.O. Box 11-6274 Dora
BEIRUT
Tel: 89 40 73
Telex: 42309
C,E,M,P

LIBERIA
Unichemicals Inc.
P.O. Box 4509
MONROVIA
Tel: 224282
Telex: 4509
E

MADAGASCAR
Technique et Precision
12, rue de Nice
P.O. Box 1227
101 **ANTANANARIVO**
Tel: 22990
Telex: 22255
P

LUXEMBOURG
Hewlett-Packard Belgium S.A./N.V.
Blvd de la Woluwe, 100
Woluwedal
B-1200 **BRUSSELS**
Tel: (02) 762-32-00
Telex: 23-494 paloben bru
A,C,CM,E,M,P

MALAYSIA
Hewlett-Packard Sales (Malaysia)
Sdn. Bhd.
9th Floor
Chung Khiaw Bank Building
46, Jalan Raja Laut
50350 **KUALA LUMPUR**
Tel: 2986555
Telex: 31011 HPSM MA
A,C,E,M,P*
Protel Engineering
P.O.Box 1917
Lot 6624, Section 64
23/4 Pending Road
Kuching, **SARAWAK**
Tel: 36299
Telex: 70904 PROMAL MA
Cable: PROTELENG
A,E,M

MALTA
Philip Toledo Ltd.
Birkirkara P.O. Box 11
Notabile Rd.
MRIEHEL
Tel: 447 47, 455 66, 4915 25
Telex: Media MW 649
E,M,P

MAURITIUS
Blanche Birger Co. Ltd.
18, Jules Koenig Street
PORT LOUIS
Tel: 20828
Telex: 4296
P

MEXICO
Hewlett-Packard de Mexico,
S.A. de C.V.
Rio Nio No. 4049 Desp. 12
Fracc. Cordoba
JUAREZ
Tel: 161-3-15-62
P
Hewlett-Packard de Mexico,
S.A. de C.V.
Condominio Kadereyta
Circuito del Mezon No. 186 Desp. 6
COL. DEL PRADO - 76030 Qro.
Tel: 463-6-02-71
P
Hewlett-Packard de Mexico,
S.A. de C.V.
Monti Morelos No. 299
Fraccionamiento Loma Bonita 45060
GUADALAJARA, Jalisco
Tel: 36-31-48-00
Telex: 0684 186 ECOME
P
Microcomputadoras Hewlett-Packard,
S.A.
Monti Pelvoux 115
LOS LOMAS, Mexico, D.F.
Tel: 520-9127
P
Microcomputadoras Hewlett-Packard,
S.A. de C.V.
Monte Pelvoux No. 115
Lomas de Chapultepec, 11000
MEXICO, D.F.
Tel: 520-9127
P
Hewlett-Packard de Mexico,
S.A. de C.V.
Monte Pelvoux No. 111
Lomas de Chapultepec
11000 **MEXICO, D.F.**
Tel: 5-40-62-28, 72-66, 50-25
Telex: 17-74-507 HEWPACK MEX
A,C,CM,E,M,P
Hewlett-Packard De Mexico (Polanco)
Avenida Ejercito Nacional #579
2daycer piso
Colonia Granada 11560
MEXICO D.F.
Tel: 254-4433
P

Hewlett-Packard de Mexico,
S.A. de C.V.
Czda. del Valle
409 Ote. 4th Piso
Colonia del Valle
Municipio de Garza Garcia Nuevo Leon
66220 **MONTERREY,** Nuevo León
Tel: 83-78-42-40
Telex: 382410 HPMY
C

Infograficas y Sistemas del Noreste, S.A.
Rio Orinoco #171 Oriente
Despacho 2001
Colonia Del Valle
MONTERREY
Tel: 559-4415, 575-3837
Telex: 483164
A,E

Hewlett-Packard de Mexico,
S.A. de C.V.
Blvd. Independencia No. 2000 Ote.
Col. Estrella
TORREON, COAH.
Tel: 171-18-21-99
P

MOROCCO

Etablissement Hubert Dolbeau & Fils
81 rue Karatchi
B.P. 11133
CASABLANCA
Tel: 3041-82, 3068-38
Telex: 23051, 22822
E

Gerep
2, rue Agadir
Boite Postale 156
CASABLANCA 01
Tel: 272093, 272095
Telex: 23 739
P

Sema-Maroc
Dept. Seric
6, rue Lapebie
CASABLANCA
Tel: 260980
Telex: 21641
C,P

NETHERLANDS

Hewlett-Packard Nederland B.V.
Startbaan 16
NL-1187 XR **AMSTELVEEN**
P.O. Box 667
NL-1180 AR **AMSTELVEEN**
Tel: (020) 547-6911
Telex: 13 216 HEPA NL
A,C,CM,E,M,P

Hewlett-Packard Nederland B.V.
Bongerd 2
NL 2906VK **CAPELLE A/D IJSSEL**
P.O. Box 41
NL 2900AA **CAPELLE A/D IJSSEL**
Tel: (10) 51-64-44
Telex: 21261 HEPAC NL
C,E

Hewlett-Packard Nederland B.V.
Pastoor Petersstraat 134-136
NL 5612 LV **EINDHOVEN**
P.O. Box 2342
NL 5600 CH **EINDHOVEN**
Tel: (040) 326911
Telex: 51484 hepae nl
C,E,P

NEW ZEALAND

Hewlett-Packard (N.Z.) Ltd.
5 Owens Road
P.O. Box 26-189
Epsom, **AUCKLAND**
Tel: 687-159
Cable: HEWPAK Auckland
C,CM,E,P*

Hewlett-Packard (N.Z.) Ltd.
184-190 Willis Street
WELLINGTON
P.O. Box 9443
Courtenay Place, **WELLINGTON 3**
Tel: 877-199
Cable: HEWPACK Wellington
C,CM,E,P

Northrop Instruments & Systems Ltd.
369 Khyber Pass Road
P.O. Box 8602
AUCKLAND
Tel: 794-091
Telex: 60605
A,M

Northrop Instruments & Systems Ltd.
110 Mandeville St.
P.O. Box 8388
CHRISTCHURCH
Tel: 488-873
Telex: 4203
A,M

Northrop Instruments & Systems Ltd.
Sturdee House
85-87 Ghuznee Street
P.O. Box 2406
WELLINGTON
Tel: 850-091
Telex: NZ 3380
A,M

NIGERIA

Elmeco Nigeria Ltd.
46, Calcutta Crescent Apapa
P.O. Box 244and
LAGOS
E

NORTHERN IRELAND

See United Kingdom

NORWAY

Hewlett-Packard Norge A/S
Folke Bernadottes vei 50
P.O. Box 3558
N-5033 **FYLLINGSDALEN** (Bergen)
Tel: 0047/5/16 55 40
Telex: 76621 hpnas n
C,E,M

Hewlett-Packard Norge A/S
Osterndalen 16-18
P.O. Box 34
N-1345 **OESTERAAS**
Tel: 0047/2/24 60 90
Telex: 76621 hpnas n
A,C,CM,E,M,P

Hewlett-Packard Norge A/S
Boehmergt. 42
Box 2470
N-5037 **SOLHEIMSVIK**
Tel: 0047/5/29 00 90

OMAN

Khimjil Ramdas
P.O. Box 19
MUSCAT/SULTANATE OF OMAN
Tel: 795 901
Telex: 3489 BROKER MB MUSCAT
P

Suhail & Saud Bahwan
P.O.Box 169
MUSCAT/SULTANATE OF OMAN
Tel: 734 201-3
Telex: 5274 BAHWAN MB
E

Imtac LLC
P.O. Box 9196
MINA AL FAHAL/SULTANATE OF OMAN
Tel: 561 695, 5602078, 561010
Telex: 5298 Tawoos On
A,C,M

PAKISTAN

Mushko & Company Ltd.
House No. 16, Street No. 16
Sector F-6/3
ISLAMABAD
Tel: 824545
Cable: FEMUS Islamabad
A,E,P*

Mushko & Company Ltd.
Oosman Chambers
Abdullah Haroon Road
KARACHI 0302
Tel: 524131, 524132
Telex: 2894 MUSKO PK
Cable: COOPERATOR Karachi
A,E,P*

PANAMA

Electronico Balboa, S.A.
Calle Samuel Lewis, Ed. Alfa
Apartado 4929
PANAMA 5
Tel: 64-2700
Telex: 3483 ELECTRON PG
CM,E,M,P

PERU

Cía Electro Médica S.A.
Los Flamencos 145
San Isidro
Casilla 1030
LIMA 1
Tel: 41-4325, 41-3705
Telex: Pub. Booth 25306 PEC PISIDR
CM,E,M,P

SAMS S.A.
Arenida Republica de Panama 3534
San Isidro, **LIMA**
Tel: 419928/417108
Telex: 20450 PE LIBERTAD
A,C,P

PHILIPPINES

The Online Advanced Systems Corp.
2nd Floor, Electra House
115-117 Esteban Street
Legaspi Village, Makati
Metro **MANILA**
Tel: 815-38-10 (up to 16)
Telex: 63274 ONLINE PN
A,C,E,M,P

PORTUGAL

Mundinter Intercambio
Mundial de Comércio S.A.R.L.
Av. Antonio Augusto Aguiar 138
Apartado 2761
LISBON
Tel: (19) 53-21-31, 53-21-37
Telex: 16691 munter p
M

Soquimica
Av. da Liberdade, 220-2
1298 **LISBOA** Codex
Tel: 56-21-82
Telex: 13316 SABASA
A

Telectra-Empresa Técnica de
Equipmentos Eléctricos S.A.R.L.
Rua Rodrigo da Fonseca 103
P.O. Box 2531
LISBON 1
Tel: (19) 68-60-72
Telex: 12598
CM,E

C.P.C.S.I.
Rua de Costa Cabral 575
4200 **PORTO**
Tel: 499174/495173
Telex: 26054
C,P

PUERTO RICO

Hewlett-Packard Puerto Rico
101 Muñoz Rivera Av
Esu. Calle Ochoa
HATO REY, Puerto Rico 00918
Tel: (809) 754-7800
A,C,CM,M,E,P

QATAR

Computer Arabia
P.O. Box 2750
DOHA
Tel: 428555
Telex: 4806 CHPARB
P

Nasser Trading & Contracting
P.O.Box 1563
DOHA
Tel: 422170
Telex: 4439 NASSER DH
M

SAUDI ARABIA

Modern Electronics Establishment
Hewlett-Packard Division
P.O. Box 281
Thuobah
AL-KHOBAR 31952
Tel: 895-1760, 895-1764
Telex: 671 106 HPMEEK SJ
Cable: ELECTA AL-KHOBAR
C,E,M

SALES & SUPPORT OFFICES
Arranged alphabetically by country

SAUDI ARABIA (Cont'd)
Modern Electronics Establishment
Hewlett-Packard Division
P.O. Box 1228
Redec Plaza, 6th Floor
JEDDAH
Tel: 644 96 28
Telex: 4027 12 FARNAS SJ
Cable: ELECTA JEDDAH
A,C,CM,E,M,P

Modern Electronics Establishment
Hewlett-Packard Division
P.O.Box 22015
RIYADH 11495
Tel: 491-97 15, 491-63 87
Telex: 202049 MEERYD SJ
C,E,M

Abdul Ghani El Ajou Corp.
P.O. Box 78
RIYADH
Tel: 40 41 717
Telex: 200 932 EL AJOU
P

SCOTLAND
~~See United Kingdom~~

SENEGAL
Societe Hussein Ayad & Cie.
76, Avenue Georges Pompidou
B.P. 305
DAKAR
Tel: 32339
Cable: AYAD-Dakar
E

Moneger Distribution S.A.
1, Rue Parent
B.P. 148
DAKAR
Tel: 215 671
Telex: 587
P

Systeme Service Conseil (SSC)
14, Avenue du Parachols
DAKAR ETOILE
Tel: 219976
Telex: 577
C,P

SINGAPORE
Hewlett-Packard Singapore (Sales) Pte. Ltd.
#08-00 Inchcape House
450-2 Alexandra Road
Alexandra P.O. Box 58
SINGAPORE, 9115
Tel: 4731788
Telex: 34209 HPSGSO RS
Cable: HEWPACK, Singapore
A,C,E,M,P

Dynamar International Ltd.
Unit 05-11 Block 6
Kolam Ayer Industrial Estate
SINGAPORE 1334
Tel: 747-6188
Telex: 26283 RS
CM

SOUTH AFRICA
Hewlett-Packard So Africa (Pty.) Ltd.
P.O. Box 120
Howard Place **CAPE PROVINCE** 7430
Pine Park Center, Forest Drive
Pinelands
CAPE PROVINCE 7405
Tel: (021) 53 7954
Telex: 57-20006
A,C,CM,E,M,P

Hewlett-Packard So Africa (Pty.) Ltd.
2nd Floor Juniper House
92 Overport Drive
DURBAN 4067
Tel: (031) 28-4178
Telex: 6-22954
C

Hewlett-Packard So Africa (Pty.) Ltd.
6 Linton Arcade
511 Cape Road
Linton Grange
PORT ELIZABETH 6001
Tel: 041-301201
Telex: 24-2916
C

Hewlett-Packard So Africa (Pty.) Ltd.
Fountain Center
Kalkoen Str.
Monument Park Ext 2
PRETORIA 0105
Tel: (012) 45 5725
Telex: 32163
C,E

Hewlett-Packard So Africa (Pty.) Ltd.
9 Eastern Service Road
Eastgate Ext. 3
SANDTON 2144
Tel: 802-5111, 802-5125
Telex: 4-20877 SA
Cable: HEWPACK Johannesburg
A,C,CM,E,M,P

SPAIN
Hewlett-Packard Española, S.A.
Calle Entenza, 321
08029 **BARCELONA**
Tel: 3/322 24 51, 321 73 54
Telex: 52603 hpbee
A,C,E,M,P

Hewlett-Packard Española, S.A.
Calle San Vicente S/N
Edificio Albia II-7B
48001 **BILBAO**
Tel: 4/423 83 06
A,C,E,M

Hewlett-Packard Española, S.A.
Crta. de la Coruña, Km. 16, 400
Las Rozas
E-**MADRID**
Tel: (1) 637.00.11
Telex: 23515 HPE
C,M

Hewlett-Packard Española, S.A.
Avda. S. Francisco Javier, S/N
Planta 10. Edificio Sevilla 2
41005 **SEVILLA**
Tel: 54/64 44 54
Telex: 72933
A,C,M,P

Hewlett-Packard Española, S.A.
Isabel La Catolica, 8
46004 **VALENCIA**
Tel: (96) 351 59 44
Telex: 63435
C,P

Hewlett-Packard Española, S.A.
Av. de Zugazarte, 8
Edificio El Abra 4
Las Arenas-Guecho
VIZCAYA
Tel: (94) 464 3255, 464 2933
Telex: 33032

SWEDEN
Hewlett-Packard Sverige AB
Östra Tullgatan 3
S-20011 **MALMÖ**
Box 6132
Tel: (040) 70270
Telex: (854) 17886 (via Spånga office)
C,P

Hewlett-Packard Sverige AB
Västra Vintergatan 9
S-70344 **ÖREBRO**
Tel: (19) 10-48-80
Telex: (854) 17886 (via Spånga office)
C

Hewlett-Packard Sverige AB
Skalholtsgatan 9, Kista
Box 19
S-16393 **SPÅNGA**
Tel: (08) 750-2000
Telex: (854) 17886
Telefax: (08) 7527781
A,C,CM,E,M,P

Hewlett-Packard Sverige AB
Box 266
Topasgatan 1A
S-42123 **VÄSTRA-FRÖLUNDA**
(Gothenburg)
Tel: (031) 89-10-00
Telex: (854) 17886 (via Spånga office)
A,C,CM,E,M,P

SUDAN
Mediterranean Engineering & Trading Co. Ltd.
P.O. Box 1025
KHARTOUM
Tel: 41184
Telex: 24052
C,P

SWITZERLAND
Hewlett-Packard (Schweiz) AG
Clarastrasse 12
CH-4058 **BASEL**
Tel: (61) 33-59-20
A,C,E,P

Hewlett-Packard (Schweiz) AG
7, rue du Bois-du-Lan
Case postale 365
CH-1217 **MEYRIN** 1
Tel: (0041) 22-83-11-11
Telex:27333 HPAG CH
A,C,CM,E,M,P

Hewlett-Packard (Schweiz) AG
Allmend 2
CH-8967 **WIDEN**
Tel: (0041) 57 31 21 11
Telex: 53933 hpag ch
Cable: HPAG CH
A,C,CM,E,M,P

Hewlett-Packard (Schweiz) AG
Schwamendingenstrasse 10
8050 **ZURICH**
Tel: (0041) 1 315 81 81
Telex: 823 537 HPAG CH
C,P

SYRIA
General Electronic Inc.
Nuri Basha Ahnaf Ebn Kays Street
P.O. Box 5781
DAMASCUS
Tel: 33-24-87
Telex: 411 215
Cable: ELECTROBOR DAMASCUS
E

Middle East Electronics
P.O.Box 2308
Abu Rumaneh
DAMASCUS
Tel: 33 45 92
Telex: 411 771
M

TAIWAN
Hewlett-Packard Taiwan Ltd.
THM Office
2, Huan Nan Road
CHUNG LI, Taoyuan
Tel: (034) 929-666
C

Hewlett-Packard Taiwan Ltd.
Kaohsiung Office
11/F, 456, Chung Hsiao 1st Road
KAOHSIUNG
Tel: (07) 2412318
C,E

Hewlett-Packard Taiwan Ltd.
8th Floor, Hewlett-Packard Building
337 Fu Hsing North Road
TAIPEI
Tel: (02) 712-0404
Telex: 24439 HEWPACK
Cable:HEWPACK Taipei
A,C,CM,E,M,P

Ing Lih Trading Co.
6th Floor, 112, Sec. 1,
Chung Hsiao East Road
TAIPEI 100
Tel: (02) 394-8191
Telex: 22894 SANKWANG
A

THAILAND
Unimesa Co. Ltd.
30 Patpong Ave., Suriwong
BANGKOK 10500
Tel: 235-5727, 234-0991/3
Telex: 84439 Simonco TH
Cable: UNIMESA Bangkok
A,C,E,M

Bangkok Business Equipment Ltd.
5/5-6 Dejo Road
BANGKOK
Tel: 234-8670, 234-8671
Telex: 87699-BEQUIPT TH
Cable: BUSIQUIPT Bangkok
P

TOGO

Societe Africaine De Promotion
B.P. 12271
LOME
Tel: 21-62-88
Telex: 5304
P

TRINIDAD & TOBAGO

Caribbean Telecoms Ltd.
Corner McAllister Street &
Eastern Main Road, Laventille
P.O. Box 732
PORT-OF-SPAIN
Tel: 624-4213
Telex: 22561 CARTEL WG
Cable: CARTEL, PORT OF SPAIN
CM,E,M,P

Computer and Controls Ltd.
P.O. Box 51
66 Independence Square
PORT-OF-SPAIN
Tel: 623-4472
Telex: 3000 POSTLX WG, ACCT
LOOGO AGENCY 1264
A,P

Feral Assoc.
8 Fitzgerald Lane
PORT-OF-SPAIN
Tel: 62-36864, 62-39255
Telex: 22432 FERALCO
Cable: FERALCO
M

TUNISIA

Tunisie Electronique S.A.R.L.
31 Avenue de la Liberte
TUNIS
Tel: 280-144
C,E,P

Tunisie Electronique S.A.R.L.
94, Av. Jugurtha, Mutuelleville
1002 **TUNIS-BELVEDERE**
Tel: 280144
Telex: 13238
C,E,P

Corema S.A.
1 ter. Av. de Carthage
TUNIS
Tel: 253-821
Telex: 12319 CABAM TN
M

TURKEY

E.M.A
Mediha Eldem Sokak No. 41/6
Yenisehir
ANKARA
Tel: 319175
Telex: 42321 KTX TR
Cable: EMATRADE ANKARA
M

Teknim Company Ltd.
Iran Caddesi No. 7
Karaklidere
ANKARA
Tel: 275800
Telex: 42155 TKNM TR
C,E

Kurt & Kurt A.S.
Mithatpasa Caddesi No. 75
Kat 4 Kizilay
ANKARA
Tel: 318875/6/7/8
Telex: 42490 MESR TR
A

Saniva Bilgisayar Sistemleri A.S.
Buyukdere Caddesi 103/6
Gayrettepe
ISTANBUL
Tel: 1673180
Telex: 26345 SANI TR
C,P

Best Inc.
Esentepe, Gazeteciler Sitesi
Keskin Kalem
Sokak 6/3, Gayrettepe
ISTANBUL
Tel: 172 1328, 173 3344
Telex: 42490
A

UNITED ARAB EMIRATES

Emitac Ltd.
P.O. Box 1641
SHARJAH
Tel: 591181
Telex: 68136 EMITAC EM
Cable: EMITAC SHARJAH
E,C,M,P,A

Emitac Ltd.
P.O. Box 2711
ABU DHABI
Tel: 820419-20
Cable: EMITACH ABUDHABI

Emitac Ltd.
P.O. Box 8391
DUBAI
Tel: 377591

Emitac Ltd.
P.O. Box 473
RAS AL KHAIMAH
Tel: 28133, 21270

UNITED KINGDOM

ENGLAND

Hewlett-Packard Ltd.
Miller House
The Ring, **BRACKNELL**
Berks RG12 1XN
Tel: 0344 424898
Telex: 848733
E

Hewlett-Packard Ltd.
Elstree House, Elstree Way
BOREHAMWOOD, Herts WD6 1SG
Tel: 01 207 5000
Telex: 8952716
C,E

Hewlett-Packard Ltd.
Oakfield House, Oakfield Grove
Clifton **BRISTOL**, Avon BS8 2BN
Tel: 0272 736806
Telex: 444302
C,E,P

Hewlett-Packard Ltd.
9 Bridewell Place
LONDON EC4V 6BS
Tel: 01 583 6565
Telex: 298163
C,P

Hewlett-Packard Ltd.
Pontefract Road
NORMANTON, West Yorkshire WF6 1RN
Tel: 0924 895566
Telex: 557355
C,P

Hewlett-Packard Ltd.
The Quadrangle
106-118 Station Road
REDHILL, Surrey RH1 1PS
Tel: 0737 68655
Telex: 947234
C,E,P

Hewlett-Packard Ltd.
Avon House
435 Stratford Road
Shirley, **SOLIHULL**, West Midlands
B90 4BL
Tel: 021 745 8800
Telex: 339105
C,E,P

Hewlett-Packard Ltd.
Heathside Park Road
Cheadle Heath
STOCKPORT
Cheshire
SK3 0RB
Tel: 061-428-0828
Telex: 668068
A,C,E,M,P

Hewlett-Packard Ltd.
Harmon House
No. 1 George Street
UXBRIDGE, Middlesex UX8 1YN
Tel: 895 720 20
Telex: 893134/5
C,CM,E,M,P

Hewlett-Packard Ltd.
King Street Lane
Winnersh, **WOKINGHAM**
Berkshire RG11 5AR
Tel: 0734 784774
Telex: 847178
A,C,E,M,P

NORTHERN IRELAND

Hewlett-Packard (Ireland) Ltd.
Carrickfergus Industrial Centre
75 Belfast Road, Carrickfergus
CO. ANTRIM BT38 8PM
Tel: 09603 67333
C,E

Cardiac Services Company
95A Finaghy Road South
BELFAST, BT10 0BY
Tel: 0232-625566
Telex: 747626
M

SCOTLAND

Hewlett-Packard Ltd.
1/3 Springburn Place
College Milton North
EAST KILBRIDE, G74 3NU
Tel: 03552-49261
Telex: 779615
C,E

Hewlett-Packard Ltd.
SOUTH QUEENSFERRY
West Lothian, EH30 9TG
Tel: 031 331 1188
Telex: 72682
C,CM,E,M,P

UNITED STATES

Alabama

Hewlett-Packard Co.
2100 Riverchase Center
Building 100 - Suite 118
BIRMINGHAM, AL 35244
Tel: (205) 988-0547
A,C,M,P*

Hewlett-Packard Co.
420 Wynn Drive
HUNTSVILLE, AL 35805
Tel: (205) 830-2000
C,CM,E,M*

Alaska

Hewlett-Packard Co.
3601 C St., Suite 1416
ANCHORAGE, AK 99503
Tel: (907) 563-6855
C,E

Arizona

Hewlett-Packard Co.
8080 Pointe Parkway West
PHOENIX, AZ 85044
Tel: (602) 273-8000
A,C,CM,E,M,P

Hewlett-Packard Co.
3400 East Britannia Dr.
Bldg. C, Suite 124
TUCSON, AZ 85706
Tel: (602) 573-7400
C,E,M**

California

Hewlett-Packard Co.
99 South Hill Dr.
BRISBANE, CA 94005
Tel: (415) 330-2500
C

Hewlett-Packard Co.
5060 E. Clinton Avenue, Suite 102
FRESNO, CA 93727
Tel: (209) 252-9652
C,M

Hewlett-Packard Co.
1421 S. Manhattan Av.
FULLERTON, CA 92631
Tel: (714) 999-6700
C,CM,E,M

Hewlett-Packard Co.
7408 Hollister Ave. #A
GOLETA, CA 93117
Tel: (805) 685-6100
C,E

SALES & SUPPORT OFFICES
Arranged alphabetically by country

UNITED STATES (Cont'd)

Hewlett-Packard Co.
2525 Grand Avenue
LONG BEACH, CA 90815
Tel: (213) 498-1111
C

Hewlett-Packard Co.
5651 West Manchester Ave.
LOS ANGELES, CA 90045
Tel: (213) 337-6000
Telex: 910-325-6608
C,M

Hewlett-Packard Co.
3155 Porter Drive
PALO ALTO, CA 94304
Tel: (415) 857-8000
C,E

Hewlett-Packard Co.
4244 So. Market Court, Suite A
SACRAMENTO, CA 95834
Tel: (916) 929-7222
A*,C,E,M

Hewlett-Packard Co.
9606 Aero Drive
SAN DIEGO, CA 92123
Tel: (619) 279-3200
C,CM,E,M

Hewlett-Packard Co.
5725 W. Las Positas Blvd.
PLEASANTON, CA 94566
Tel: (415) 460-0282
C

Hewlett-Packard Co.
3003 Scott Boulevard
SANTA CLARA, CA 95054
Tel: (408) 988-7000
Telex: 910-338-0586
A,C,CM,E

Hewlett-Packard Co.
2150 W. Hillcrest Dr.
THOUSAND OAKS, CA 91320
(805) 373-7000
C,CM,E

Colorado

Hewlett-Packard Co.
2945 Center Green Court South
Suite A
BOULDER, CO 80301
Tel: (303) 499-6655
A,C,E

Hewlett-Packard Co.
24 Inverness Place, East
ENGLEWOOD, CO 80112
Tel: (303) 649-5000
A,C,CM,E,M

Connecticut

Hewlett-Packard Co.
500 Sylvan Av.
BRIDGEPORT, CT 06606
Tel: (203) 371-6454
C,E

Hewlett-Packard Co.
47 Barnes Industrial Road South
WALLINGFORD, CT 06492
Tel: (203) 265-7801
A,C,CM,E,M

Florida

Hewlett-Packard Co.
2901 N.W. 62nd Street
FORT LAUDERDALE, FL 33309
Tel: (305) 973-2600
C,E,M,P*

Hewlett-Packard Co.
6800 South Point Parkway
Suite 301
JACKSONVILLE, FL 32216
Tel: (904) 636-9955
C*,M**

Hewlett-Packard Co.
255 East Drive, Suite B
MELBOURNE, FL 32901
Tel: (305) 729-0704
CM,E

Hewlett-Packard Co.
6177 Lake Ellenor Drive
ORLANDO, FL 32809
Tel: (305) 859-2900
A,C,CM,E,P*

Hewlett-Packard Co.
4700 Bayou Blvd.
Building 5
PENSACOLA, FL 32503
Tel: (904) 476-8422
A,C,M

Hewlett-Packard Co.
5550 W. Idlewild, #150
TAMPA, FL 33614
Tel: (813) 884-3282
C,E,M,P

Georgia

Hewlett-Packard Co.
2000 South Park Place
ATLANTA, GA 30339
Tel: (404) 955-1500
Telex: 810-766-4890
A,C,CM,E,M,P*

Hewlett-Packard Co.
3607 Parkway Lane
Suite 300
NORCROSS, GA 30092
Tel: (404) 448-1894
C,E,P

Hawaii

Hewlett-Packard Co.
Kawaiahao Plaza, Suite 190
567 South King Street
HONOLULU, HI 96813
Tel: (808) 526-1555
A,C,E,M

Idaho

Hewlett-Packard Co.
11309 Chinden Blvd.
BOISE, ID 83707
Tel: (208) 323-2700
C

Illinois

Hewlett-Packard Co.
304 Eldorado Road
P.O. Box 1607
BLOOMINGTON, IL 61701
Tel: (309) 662-9411
A,C,E,M**

Hewlett-Packard Co.
525 W. Monroe, #1308
CHICAGO, IL 60606
Tel: (312) 930-0010
C

Hewlett-Packard Co.
1200 East Diehl Road
NAPERVILLE, IL 60566
Tel: (312) 357-8800
C

Hewlett-Packard Co.
5201 Tollview Drive
ROLLING MEADOWS, IL 60008
Tel: (312) 255-9800
Telex: 910-687-1066
A,C,CM,E,M

Indiana

Hewlett-Packard Co.
11911 N. Meridian St.
CARMEL, IN 46032
Tel: (317) 844-4100
A,C,CM,E,M

Hewlett-Packard Co.
111 E. Ludwig Road
Suite 108
FT. WAYNE, IN 46825
Tel: (219) 482-4283
C,E

Iowa

Hewlett-Packard Co.
4070 22nd Av. SW
CEDAR RAPIDS, IA 52404
Tel: (319) 390-4250
C,E,M

Hewlett-Packard Co.
4201 Corporate Dr.
WEST DES MOINES, IA 50265
Tel: (515) 224-1435
A**,C,M**

Kansas

Hewlett-Packard Co.
7804 East Funston Road, Suite 203
WICHITA, KS 67207
Tel: (316) 684-8491
C,E

Kentucky

Hewlett-Packard Co.
10300 Linn Station Road, Suite 100
LOUISVILLE, KY 40223
Tel: (502) 426-0100
A,C,M

Louisiana

Hewlett-Packard Co.
160 James Drive East
ST. ROSE, LA 70087
P.O. Box 1449
KENNER, LA 70063
Tel: (504) 467-4100
A,C,E,M,P

Maryland

Hewlett-Packard Co.
3701 Koppers Street
BALTIMORE, MD 21227
Tel: (301) 644-5800
Telex: 710-862-1943
A,C,CM,E,M

Hewlett-Packard Co.
2 Choke Cherry Road
ROCKVILLE, MD 20850
Tel: (301) 948-6370
A,C,CM,E,M

Massachusetts

Hewlett-Packard Co.
1775 Minuteman Road
ANDOVER, MA 01810
Tel: (617) 682-1500
A,C,CM,E,M,P*

Hewlett-Packard Co.
32 Hartwell Avenue
LEXINGTON, MA 02173
Tel: (617) 861-8960
C,E

Michigan

Hewlett-Packard Co.
4326 Cascade Road S.E.
GRAND RAPIDS, MI 49506
Tel: (616) 957-1970
C,M

Hewlett-Packard Co.
39550 Orchard Hill Place Drive
NOVI, MI 48050
Tel: (313) 349-9200
A,C,E,M

Hewlett-Packard Co.
1771 W. Big Beaver Road
TROY, MI 48084
Tel: (313) 643-6474
C

Minnesota

Hewlett-Packard Co.
2025 W. Larpenteur Ave.
ST. PAUL, MN 55113
Tel: (612) 644-1100
A,C,CM,E,M

Missouri

Hewlett-Packard Co.
1001 E. 101st Terrace Suite 120
KANSAS CITY, MO 64131-3368
Tel: (816) 941-0411
A,C,CM,E,M

Hewlett-Packard Co.
13001 Hollenberg Drive
BRIDGETON, MO 63044
Tel: (314) 344-5100
A,C,E,M

Nebraska

Hewlett-Packard
11626 Nicholas St.
OMAHA, NE 68154
Tel: (402) 493-0300
C,E,M

New Jersey

Hewlett-Packard Co.
120 W. Century Road
PARAMUS, NJ 07653
Tel: (201) 265-5000
A,C,CM,E,M

Hewlett-Packard Co.
20 New England Av. West
PISCATAWAY, NJ 08854
Tel: (201) 562-6100
A,C,CM,E

New Mexico
Hewlett-Packard Co.
7801 Jefferson N.E.
ALBUQUERQUE, NM 87109
Tel: (505) 823-6100
C,E,M
Hewlett-Packard Co.
1460 Trinity Dr., Suite 3
LOS ALAMOS, NM 87544
Tel: (505) 662-6700
C,E

New York
Hewlett-Packard Co.
5 Computer Drive South
ALBANY, NY 12205
Tel: (518) 458-1550
A,C,E,M
Hewlett-Packard Co.
9600 Main Street
CLARENCE, NY 14031
Tel: (716) 759-8621
C,E
Hewlett-Packard Co.
200 Cross Keys Office Park
FAIRPORT, NY 14450
Tel: (716) 223-9950
A,C,CM,E,M
Hewlett-Packard Co.
7641 Henry Clay Blvd.
LIVERPOOL, NY 13088
Tel: (315) 451-1820
A,C,CM,E,M
Hewlett-Packard Co.
No. 1 Pennsylvania Plaza
55th Floor
34th Street & 8th Avenue
MANHATTAN NY 10119
Tel: (212) 971-0800
C,M*
Hewlett-Packard Co.
15 Myers Corner Rd.
Hollowbrook Park, Suite 2D
WAPPINGER FALLS, NY 12590
Tel: (914) 298-9125
CM,E
Hewlett-Packard Co.
2975 Westchester Avenue
PURCHASE, NY 10577-2590
Tel: (914) 935-6300
C,CM,E
Hewlett-Packard Co.
3 Crossways Park West
WOODBURY, NY 11797
Tel: (516) 682-7800
A,C,CM,E,M

North Carolina
Hewlett-Packard Co.
305 Gregson Dr.
CARY, NC 27511
Tel: (919) 467-6600
C,CM,E,M,P*
Hewlett-Packard Co.
9600-H Southern Pine Blvd.
CHARLOTTE, NC 28210
Tel: (704) 527-8780
C*
Hewlett-Packard Co.
5605 Roanne Way
GREENSBORO, NC 27420
Tel: (919) 852-1800
A,C,CM,E,M,P*

Ohio
Hewlett-Packard Co.
2717 S. Arlington Road
AKRON, OH 44312
Tel: (216) 644-2270
C,E
Hewlett-Packard Co.
4501 Erskine Road
CINCINNATI, OH 45242
Tel: (513) 891-9870
C,M
Hewlett-Packard Co.
15885 Sprague Road
CLEVELAND, OH 44136
Tel: (216) 243-7300
A,C,CM,E,M
Hewlett-Packard Co.
9080 Springboro Pike
MIAMISBURG, OH 45342
Tel: (513) 433-2223
A,C,CM,E*,M
Hewlett-Packard Co.
One Maritime Plaza, 5th Floor
720 Water Street
TOLEDO, OH 43604
Tel: (419) 242-2200
C
Hewlett-Packard Co.
675 Brooksedge Blvd.
WESTERVILLE, OH 43081
Tel: (614) 891-3344
C,CM,E*

Oklahoma
Hewlett-Packard Co.
3525 N.W. 56th St.
Suite C-100
OKLAHOMA CITY, OK 73112
Tel: (405) 946-9499
C,E*,M
Hewlett-Packard Co.
3840 S. 103rd E. Ave., #100
TULSA, OK 74146
Tel: (918) 665-3300
A**,C,E,M*,P*

Oregon
Hewlett-Packard Co.
9255 S. W. Pioneer Court
WILSONVILLE, OR 97070
Tel: (503) 682-8000
A,C,E*,M

Pennsylvania
Hewlett-Packard Co.
50 Dorchester Rd.
HARRISBURG, PA 17112
Tel: (717) 657-5900
C
Hewlett-Packard Co.
111 Zeta Drive
PITTSBURGH, PA 15238
Tel: (412) 782-0400
A,C,E,M
Hewlett-Packard Co.
2750 Monroe Boulevard
VALLEY FORGE, PA 19482
Tel: (215) 666-9000
A,C,CM,E,M

South Carolina
Hewlett-Packard Co.
Brookside Park, Suite 122
1 Harbison Way
COLUMBIA, SC 29210
Tel: (803) 732-0400
C,M
Hewlett-Packard Co.
545 N. Pleasantburg Dr.
Suite 100
GREENVILLE, SC 29607
Tel: (803) 232-8002
C

Tennessee
Hewlett-Packard Co.
One Energy Centr, Suite 200
Pellissippi Pkwy.
KNOXVILLE, TN 37932
Tel: (615) 966-4747
A,C,M
Hewlett-Packard Co.
3070 Directors Row
Directors Square
MEMPHIS, TN 38131
Tel: (901) 346-8370
A,C,M
Hewlett-Packard Co.
220 Great Circle Road, Suite 116
NASHVILLE, TN 37228
Tel: (615) 255-1271
A,C,E,M,P

Texas
Hewlett-Packard Co.
1826-P Kramer Lane
AUSTIN, TX 78758
Tel: (512) 835-6771
C,E,P*
Hewlett-Packard Co.
5700 Cromo Dr
EL PASO, TX 79912
Tel: (915) 833-4400
C,E*,M**
Hewlett-Packard Co.
3952 Sandshell Drive
FORT WORTH, TX 76137
Tel: (817) 232-9500
C
Hewlett-Packard Co.
10535 Harwin Drive
HOUSTON, TX 77036
Tel: (713) 776-6400
A,C,E,M,P*
Hewlett-Packard Co.
3301 Royal Lane
IRVING, TX 75063
Tel: (214) 869-3377
C,E
Hewlett-Packard Co.
109 E. Toronto, Suite 100
McALLEN, TX 78503
Tel: (512) 630-3030
C
Hewlett-Packard Co.
930 E. Campbell Rd.
RICHARDSON, TX 75081
Tel: (214) 231-6101
A,C,CM,E,M,P*
Hewlett-Packard Co.
1020 Central Parkway South
SAN ANTONIO, TX 78232
Tel: (512) 494-9336
A,C,E,M,P*

Utah
Hewlett-Packard Co.
3530 W. 2100 South St.
SALT LAKE CITY, UT 84119
Tel: (801) 974-1700
A,C,E,M

Virginia
Hewlett-Packard Co.
840 Greenbrier Circle
Suite 101
CHESAPEAKE, VA 23320
Tel: (804) 424-7105
C,E,M
Hewlett-Packard Co.
4305 Cox Road
GLEN ALLEN, VA 23060
Tel: (804) 747-7750
A,C,E,M,P*
Hewlett-Packard Co.
Tanglewood West Bldg.
Suite 240
3959 Electric Road
ROANOKE, VA 24018
Tel: (703) 774-3444
C,E,P

Washington
Hewlett-Packard Co.
15815 S.E. 37th Street
BELLEVUE, WA 98006
Tel: (206) 643-4000
A,C,CM,E,M
Hewlett-Packard Co.
North 708 Argonne Road
SPOKANE, WA 99212-2793
Tel: (509) 922-7000
C

West Virginia
Hewlett-Packard Co.
501 56th Street
CHARLESTON, WV 25304
Tel: (304) 925-0492
A,C,M

Wisconsin
Hewlett-Packard Co.
275 N. Corporate Dr.
BROOKFIELD, WI 53005
Tel: (414) 796-8800
A,C,E*,M

URUGUAY
Pablo Ferrando S.A.C. e I.
Avenida Italia 2877
Casilla de Correo 370
MONTEVIDEO
Tel: 80-3805
Telex: Public Booth 901
A,CM,E,M

SALES & SUPPORT OFFICES
Arranged alphabetically by country

URUGUAY (Cont'd)
Olympia de Uruguay S.A.
Maquines de Oficina
Avda. del Libertador 1997
Casilla de Correos 6644
MONTEVIDEO
Tel: 91-1809, 98-3807
Telex: 6342 OROU UY
P

VENEZUELA
Hewlett-Packard de Venezuela C.A.
3A Transversal Los Ruices Norte
Edificio Segre 2 & 3
Apartado 50933
CARACAS 1050
Tel: (582) 239-4133
Telex: 251046 HEWPACK
A,C,CM,E,M,P

Hewlett-Packard de Venezuela, C.A.
Centro Ciudad Comercial Tamanaco
Nivel C-2 (Nueva Etapa)
Local 53H05
Chuao, **CARACAS**
Tel: 928291
P

Albis Venezolana S.R.L.
Av. Las Marias, Ota. Alix,
El Pedregal
Apartado 81025
CARACAS 1080A
Tel: 747984, 742146
Telex: 24009 ALBIS VC
A

Tecnologica Medica del Caribe, C.A.
Multicentro Empresarial del Este
Ave. Libertador
Edif. Libertador
Nucleo "C" - Oficina 51-52
CARACAS
Tel: 339867/333780
M

Hewlett-Packard de Venezuela C.A.
Residencias Tia Betty Local 1
Avenida 3 y con Calle 75
MARACAIBO, Estado Zulia
Apartado 2646
Tel: (5861) 80304
Telex: 62464 HPMAR
C,E

Hewlett-Packard de Venezuela C.A.
Urb. Lomas de Este
Torre Trebol — Piso 11
VALENCIA, Estado Carabobo
Apartado 3347
Tel: (5841) 222992
C,P

YUGOSLAVIA
Do Hermes
General Zdanova 4
YU-11000 **BEOGRAD**
Tel: (011) 342 641
Telex: 11433
A,C,E,M,P

Do Hermes
Celovska 73
YU-61000 **LJUBLJANA**
Tel: (061) 553 170
Telex: 31583
A,C,E,M,P

Elektrotehna
Titova 51
YU-61000 **LJUBLJANA**
CM

Do Hermes
Kralja Tomislava 1
YU-71000 **SARAJEVO**
Tel: (071) 35 859
Telex: 41634
C**,P

ZAIRE
Computer & Industrial Engineering
25, Avenue de la Justice
B.P. 12797
KINSHASA, Gombe
Tel: 32063
Telex: 21552
C,P

ZAMBIA
R.J. Tilbury (Zambia) Ltd.
P.O. Box 32792
LUSAKA
Tel: 215590
Telex: 40128
E

ZIMBABWE
Field Technical Sales (Private) Limited
45, Kelvin Road North
P.O. Box 3458
SALISBURY
Tel: 705 231
Telex: 4-122 RH
E,P

August 1986

HEWLETT PACKARD

SUPPLEMENT TO
OPERATING AND SERVICE MANUAL
(HP Part No. 37204-90003)

HP 37204A/B
HP-IB EXTENDER

SERIAL NUMBERS

This supplement applies to serial no. 2547U09023 onwards for HP 37204A options 003, 004, 013 and 014.

Manual Part Number: 37204-90007 Printed: January 1989

LIST OF CONTENTS

SECTION S1 INTRODUCTION

Paragraph

S1-1 INTRODUCTION . . . . . Page S1-1
S1-2 NEW FIBER OPTIIONS S1-1
S1-3 SPECIFICATION CHANGES S1-1

SECTION S2 INSTALLATION

Paragraph

S1-1 INTRODUCTION S2-1
S2-2 CABLE LINK BETWEEN EXTENDERS S2-1
S2-2-1 Maximum Link Length S2-1

SECTION S6 REPLACABLE PARTS

Paragraph

S6-1 INTRODUCTION S6-1

SECTION S8 SERVICE

Paragraph

S8-1 INTRODUCTION S8-1

SECTION SG2 INSTRUMENT TROUBLESHOOTING

Paragraph

SG2-1 DETERMINING WHICH ASSEMBLY IS FAULTY SG2-1
SG2-2 A1 ASSEMBLY REPLACEMENT SG2-1
SG2-3 REPAIR OF FIBER OPTIC ASSEMBLY SG2-1

Introduction

S1-1 Introduction

This supplement to the HP 37204A/B Operating and Service Manual (HP Part No 37204-90003) covers options 003/004/013/014 which allow customers to couple fiber cables with SMA or ST connectors directly up to the HP 37204A.

The Sections in this supplement correspond to those Sections of the Operating and Service Manual which require modifications/additions to cover options 003/004/013/014. To avoid ambiguity, section numbers, etc, in this supplement are prefixed by an "S".

S1-2 New Fiber Options

Options 003/004/013/014 replace options 001/002 which are discontinued.

- Opt 003 adds fiber optic capability (SMA connectors) to port A.
- Opt 004 adds fiber optic capability (SMA connectors) to ports A and B.
- Opt 013 adds fiber optic capability (ST connectors) to port A.
- Opt 014 adds fiber optic capability (ST connectors) to ports A and B.

S1-3 Specification Changes

The new fiber options increase the maximum distance between extenders to 3000m (9800 ft) - provided the power budget is sufficient to cover cable attenuation (see Section S2 of this supplement).

Installation

S2-1 Introduction

Generally, Section 2 of the HP 37204A/B Operating and Service Manual (HP Part No 37204-90003) applies except for the following:

- Page 2-2, para 2-6. Options 003/004/013/014 allow a maximum length cable per link of 3000m (9800 ft), depending on cable characteristics and the link loss budget (see para S2-2-1 below). (Options 001 and 002 allow only 1250m.)

- Page 2-3, para 2-8-2. This para applies to options 001/002 only. For options 003/004/013/014, refer to para S2-2-1 below.

- Page 2-4, para 2-8-3. The CAUTION, which applies to HP's HFBR-4000 connectors, also applies to SMA connectors. For ST connectors, engage pin and slot before pushing home the bayonet connection.

- Page 2-4, para 2-9-2. For options 001/002 only, use loopback cable HP Part No 5061-2694. For options 003/004/013/014, use a standard patchcord with SMA or ST connectors as appropriate.

S2-2 Cable Link Between Extenders

Options 003/004 use SMA connectors; options 013 and 014 use ST connectors).

S2-2-1 Maximum Link Length

Options 003/004/013/014 will work with a range of fiber sizes from 50/125 up to 100/140 micron (dispersion effects make sizes above 100/140 micron unsuitable). Check, for the chosen cable, that the actual link length is less than or equal to the maximum link length.

$$\text{Maximum link length (km)} = \frac{\text{link loss budget (dB) - excess losses (dB)}}{\text{fiber attenuation (dB per km)}}$$

Data for the calculation:

- Fiber attenuation: see cable specification.

- Excess losses: allow for the launch connector loss of non-precision connectors and "extra" connections in the cable, eg patch cables, splices, etc.

- Link loss budget: this varies with the cable dimensions - consult the table below. The table allows for temperature and ageing effects, and the launch connector loss of high performance connectors such as OFTI NOFC (SMA) or AT&T Precision Ceramic Ferrules (ST).

Fiber Dimensions (core/cladding)	**Numerical Aperture**	**Link Loss Budget (dB)**	
50/125 um	0.20	5	
62.5/125 um	0.28	10	To get a
85/125 um	0.26	12	typical figure,
100/140 um	0.29	13.5	add 5 dB

Sample calculation:

- Fiber specification: 62.5/125 cable with attenuation of 4 dB per km.

- Link loss budget for 62.5/125 cable: 10dB.

- Excess launch connector loss: 0dB (precision ST connectors used).

Hence,

- max link length = 10/4 = 2.5 km.
- typical maximum length = (10 + 5)/4 = 3.75 km

S6

Replaceable Parts

S6-1 Introduction

Options 003/004/013/014 comprise the A1 assembly and a fiber optic assembly. The A1 assembly is available as an exchange assembly (37204-69001) but the fiber optic assemblies are available only as non exchange assemblies.

Option	Non Exchange Assy
003	37204-60025
004	37204-60026
013	37204-60028
014	37204-60029

This Section does not list parts for the fiber optic assemblies because troubleshooting the assemblies to component level is not practicable.

For the parts list for A1 assembly and the main list of parts (covers, end panels, etc), and for ordering information, refer to Section 6 of the HP 37204A/B Operating and Service Manual (HP Part No 37204-90003).

Service

S8-1 Introduction

Generally Section 8 of the HP 37204A/B Operating and Service Manual (HP Part No 37204-90003) applies except for the following:

- Page 8-2, para 8-8. The repair kit HFBR-0100 is only for cables used with options 001/002.
- Page 8-6, para 8-10-2. Running self test for the fiber optic ports requires an external loopback connector. HP Part No 5061-2694 is suitable for options 001/002 only. For options 003/004/013/014, use a standard patch cord.
- Pages 8-13 to 8-16, General Service Sheet G-2. Substitute procedure SG-2 given below.
- Pages 8-27 to 8-33, Assembly Level Service Sheet A2. For options 003/004/013/014, repair is by board replacement only so assembly level procedures are not required.

INSTRUMENT TROUBLESHOOTING

G2-1 Determining Which Assembly Is Faulty

This procedure replaces para G2-1 of the HP 37204A/B Operating and Service Manual for options 003/004/013/014 only. Use it to determine simply whether the A1 assembly or the fiber optic assembly is faulty.

Procedure:

1. Run self test (para 8-10 of the HP 37204A/B Operating and Service Manual) and note at which stage the test fails.

2. If self test fails when testing the COAX ports, suspect the A1 assembly.

3. If self test fails when testing the fiber optic ports, suspect the fiber optic assembly.

G2-2 A1 Assembly Replacement

Apply para G2-1 of the HP 37204A/B Operating and Service Manual (pages 8-15 and 8-16).

G2-3 Repair Of Fiber Optic Assembly

For the fiber optic assembly, there is no provision for component level repair. If the assembly is found to be faulty, replace it with a non exchange assembly.

Option	Non Exchange Assy
003	37204-60025
004	37204-60026
013	37204-60028
014	37204-60029