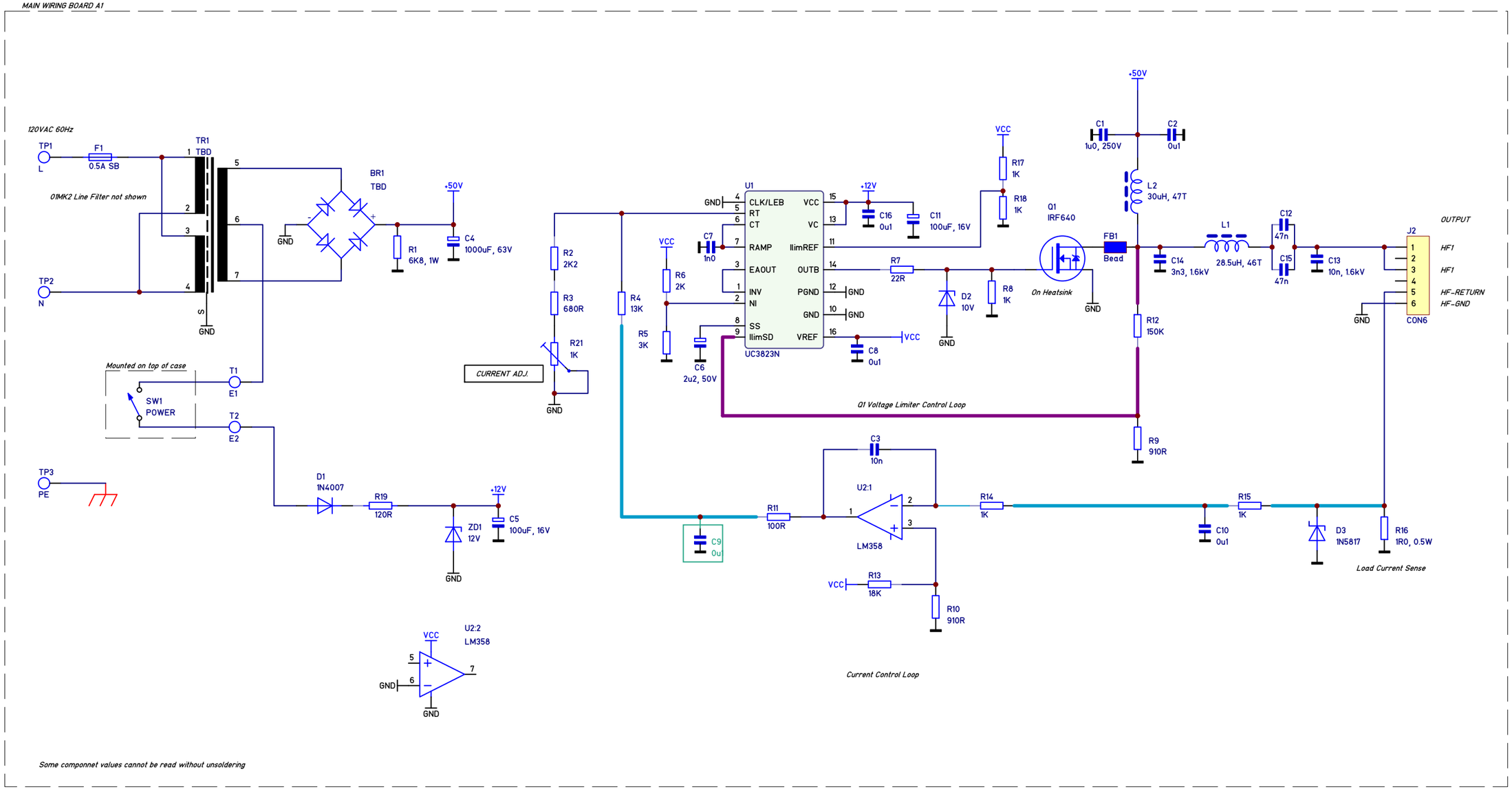

Unless otherwise specified, all values are as follows: resistor values are in Ohms, i.e. 0R47, 5R6, 220, 5K6, 22K capacitor values are in Microfarads, i.e. 220p, 0u1, 2u2, 33 inductor values are in Microhenries, i.e. 0u22, 5u6, 68, 2m2

This drawing is our property. Duplication, unauthorized use of any kind is prohibited.

Without Approval use only for inquiry.

Approval:

Prelininary Schematic

	Date	Name
Drawn	17-Oct-2013 06:15:32	GJO
Modified		
Checked		

☐ Prototype ☒ Production ☐ BOM Done?

PCB Name: Main Board			
PCB Nr. 7022-0000 REVD			
PCB Type: FR4 2L 1LL 2SM 1.5mm	Scale: SCH		

Change Index	Change Notification Nr.	Date	Name

Title: **SP200 Solder Station**

Used in SP-PW1-10	Repl.for n/a	Build No. n/a
Drw. Type: PCB SCHEMATIC	Prj. Nr 13028G	
Size: B	Rev: 3	Drw. Nr 13028-STPS-E01
File: SP200.sch		Sheet 1 of 1

Requires TGL-017 Font