CHECKING LANDS (6)

No.	Name	Function
186	AS-ISSW	Is SW output
187	AS-LAE	Lens access enable
188	AS-LD	Lens drive signal
189	AS-N1	Charge motor brake signal
190	AS-N2	Spool motor brake signal
191	AS-N3	Rewind motor control signal 1
192	AS-N4	Rewind motor control signal 2
193	AS-Pi	Charge motor driving signal
194	AS-P2	Spool motor driving signal
195	AS-PGND	Power GND
196	AS-R2SW	R2 SW
197	AS- RLSABLE	Release permission
198	AS-RSW	Release switch
199	AS-SC	SC dial output
200	AS-SCAGND	Analog GND for SCdial
201	AS-SCVREF	Ref. voltage for SC
202	AS-SHUT3V	3.3V for shutter
203	AS-SHUT5V	5. 5V for shutter
204	AS-SHUTGND	GND for shutter
205	AS-TRIAC	TRIAC control terminal
206	AS-VBAT	Power source
207	AS-VCC1	Power source (after power SW)

CHECKING LANDS (7)

No.	Name	Function
B-1	WLB-CTRL	DC-DC converter-control terminal
B-2	WLB-12V	DC-DC converter 12V output
B-3	WLB-5V	DC-DC converter 5.5V output
B-4	WLB-VCC1	DC-DC converter input
B-5	WLB-GND	DC-DC converter GND
B-6	ASB-PCGND	GND for photo coupler
B-7	ASB-PCOA	Aperture photo interrupter output
B-8	ASB-PC3V	3.3V for photo coupler
B-9	ASB-APMG	Aperture Mg signal
B-10	ASB-APGND	GND for aperture Mg
B-n	ASB-AP3V	3.3V for aperturellg
B-12	ASB- AEL	AE LOCK SW
B-13	ASB-PULSE	Mech. pulse output
B-14	ASB-TV	Tvdial output
B-15	ASB-HOSEI	Compensation dial output
B-16	ASB-TVVREF	Ref. voltage for dial resistor
B-17	ASB-TVAGND	GND for dial resistor
B-18	ASB- ILLUMISW	Illuminator SW output
B-19	ASB-PSAM	Mode dial output
B-20	ASB-TVSELFLED	Self-timer LED cathode terminal
B-21	ASB-TVPC3V	3.3V for Mech. pulse
B-22	ASB-MCHARGE	Charge compl-etion switch output
B-23	ASB-COUNTER	Counter SW output
B-24	ASB-MAKISW	Film advance SW output
B-25	ASB-TV3V	3.3V for self -timer LED
B-26	ASB-TAJYU	Not in use
B-27	ASB-R1	R1 switch output

〔6〕 メインＦＰＣ電子部品配置図，端子名称及びチェックランド
MAIN FPC ELECTRIC PARTS LOCATIONS TERMINALS & CHECKING LANDS

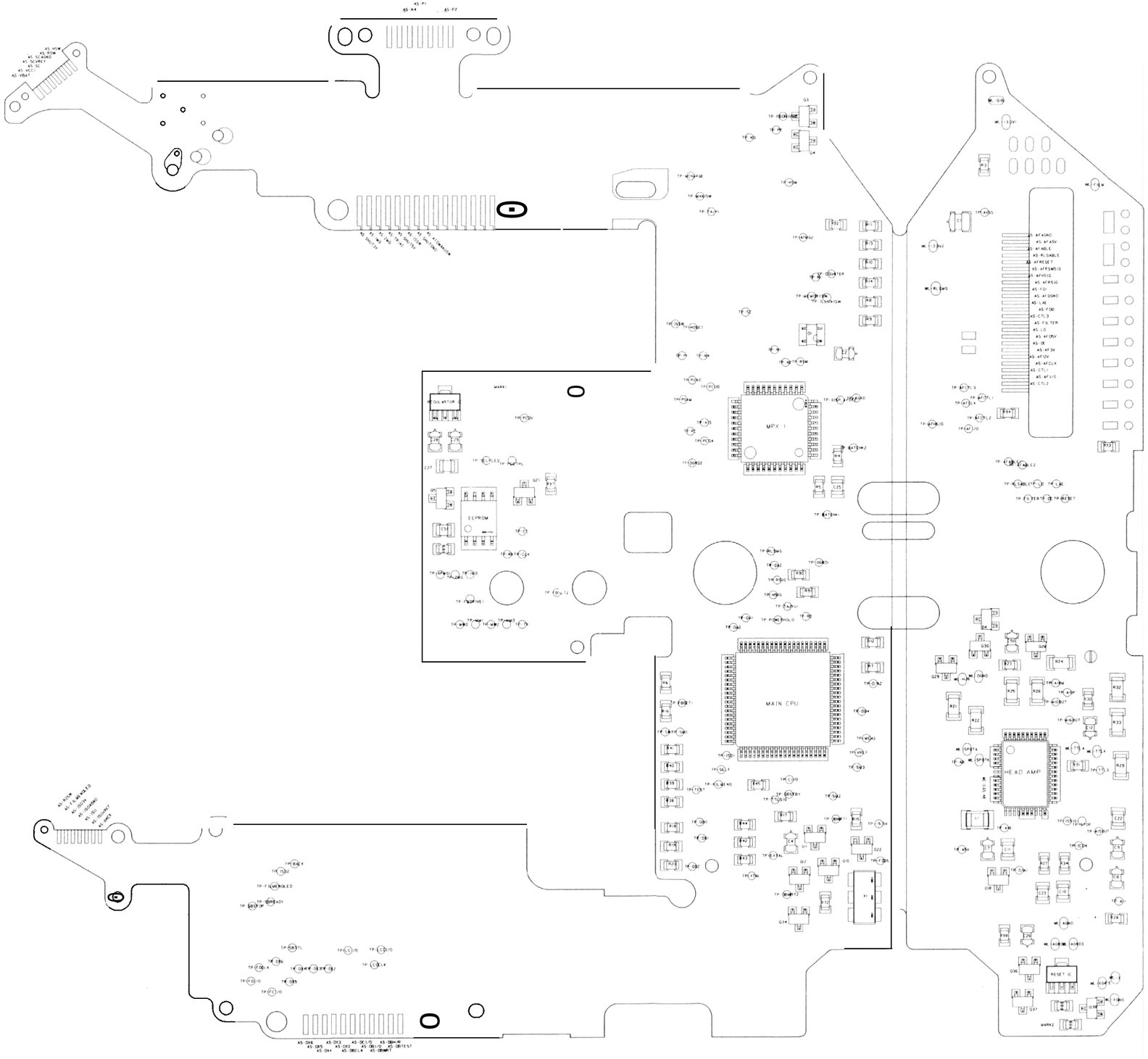

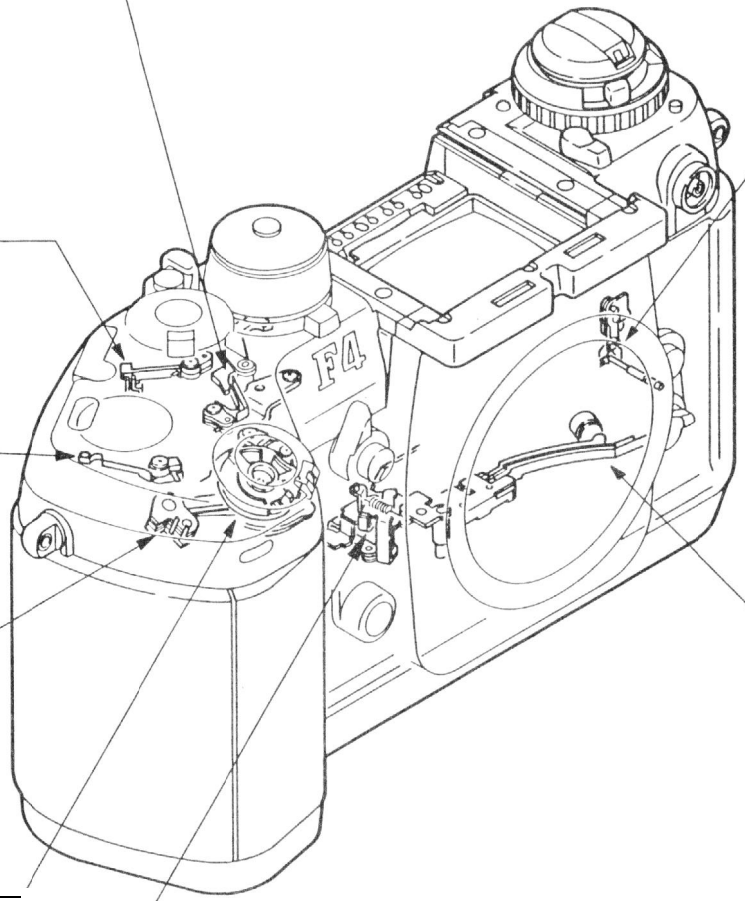

Charging completion switch
Halts the shutter charging motor when the mechanical charging operation such as shutter and mirror charging has been completed. The switch goes ON during mechanical charging and goes OFF when completed.

Film advance complete switch
Completes film advance operation. Spool motor rotates when the switch is turned ON during shutter release operation and the motor stops when the switch is turned OFF.

Frame counter
Stops the blank exposure operation when the frame counter advances to frame "1".

Shutter release switch
Releases shutter.

Shutter pre-release switch
Activates power circuit. Shutter pre-release timer is activated when the shutter pre-release switch is depressed. Then AE and AF operations start.

Powe
Supplies and breaks the path of power.

Film advance mode selector switch
Selects film advance modes (CH, CL, CS, S). Self-timer switch is also included.

Filter switch 1
AF filter identification switch. When a standard filter is incorporated, filter switch 1 is ON.

Filter switch 2
AF filter identification switch. When an active illuminator filter is employed, filter switch 2 is ON.

EE sensor switch
Identifies lens mounted.

H/R switch
Cable release switch. When the switch is depressed, the shutter is pre-released in the first step, and then the shutter is released in the second step.

Rear curtain switch
Activates mechanical charging operation such as shutter and mirror charging to start. This switch becomes ON when the rear curtain runs and becomes OFF during mechanical charging operation.

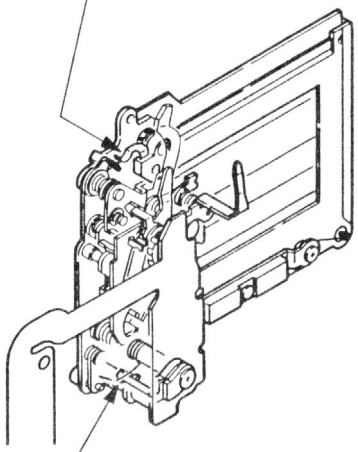

Sync contact switch
Turns semiconductor switch for firing flash ON and starts integration in TTL mode. This switch goes ON when the front curtain moves and it goes OFF during mechanical charging operation.

R2 switch
Film rewind switch.
Starts rewinding film automatically. (the power rewind starts when both R1 and R2 switches are turned on.) If shutter pre-release timer is OFF while rewinding film, the shutter pre-release timer is activated by turning the switch R2 ON.

TC
Identifies lens mounted.

fmm switch
Identifies lens mounted.

Illuminator switch
Turns illuminator ON and OFF.

R1 switch
Film rewind switch.
Recognizes that sprocket becomes free to rotate.

Film detection switch
Detects film is loaded. The switch is ON when film is not loaded, and it is OFF when film is loaded.

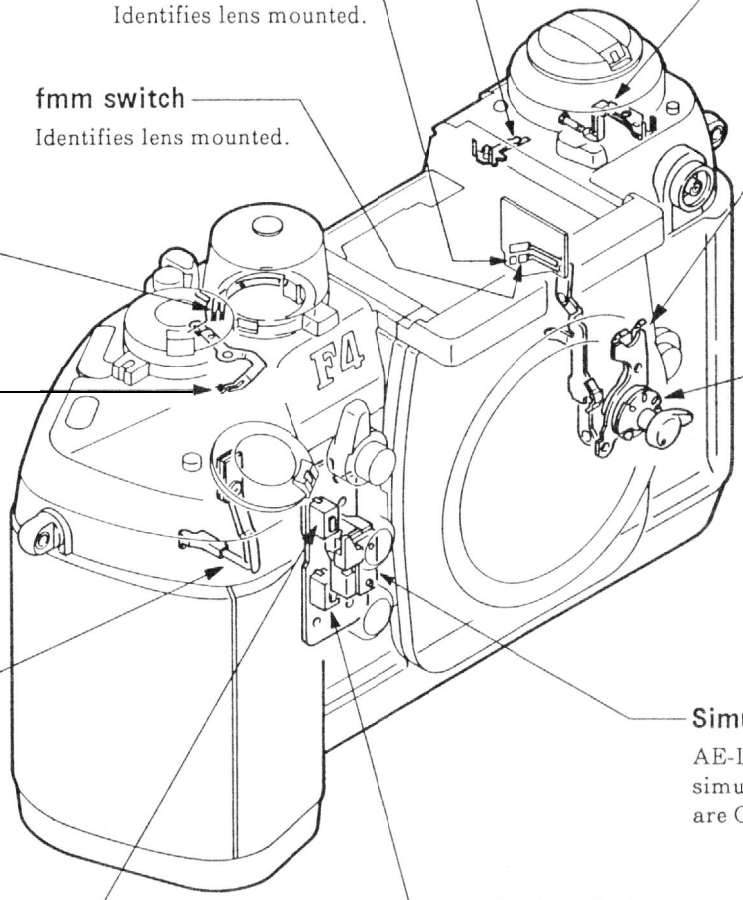

Camera back switch
Recognizes that camera back is closed.
The switch is ON when the camera back is opened, and it is OFF when the camera back is closed.

Lens release switch
Recognizes that lens is mounted.
The switch becomes OFF when lens release button is pressed and AF mode turns to be AF-M mode.

AF switch 1
Focus mode selector switch.
The switch is ON when in AF-S mode.

AF switch 2
Focus mode selector switch.
The switch is ON when in AF-C mode.

*Both AF switches are OFF when in AF-M mode.

Simultaneous lock switch
AE-L and AF-L are locked when the simultaneous lock switch and AF-L switch are ON.

AE lock switch
Locks exposure values stored in the memory.

Focus lock switch
Locks focus.

F 4 EEF'ROM DATA (NEW CPU)

ADDRESS	CONTENTS	VALUE TO BE WRITTEN FIXED	FPC OF R.P.	STANDARD
0	AF flag (6 bit:L1, 7 bit:L2)		48	
1	A/B balance compensation value (X ber P)		0	
2	Absolute value of 11 compensation (at F2. 8)		0	
3	Absolute value of 12 compensation (at F8)			
4	Hard AGC compensation value		20!	
5	K5 factor compensation coefficient (at F2. 8)	130	〃	〃
6	K8 factor compensation coefficient (at F8)	208	〃	〃
7	Difference light (body)	0	←	←
8	Rewinding time 38:film end rewound, O:film end left outside	38	←	38 or0
9	Spot metering level (changes by 1/8EV per 1LSB)		0	0
10	TTL level (changes by 1/12EV per lLSB)		0	0
11	Shutter speed adjustment (M 118000 : 2.5 μs per lLSB)		0	24
12	Vcc r adjustment (writes adjustment value in FPC assembling)			
13	Vref. r adjustment of integer (-ditto-)			
14	Vref. r adjustment of decimal (-ditto-)			
15	Aperture adjustment data		0	
16	Aperture adjustment data		0	
17	Preliminary film advance adjustment	176	“	←
18	Preliminary film advance adjustment	240	←	〃
19	Parameter for Cs-mode	10	←	〃
20	Flag data for Cs-mode	0	+	←
21	Delay time for MF-24	15	“	“
22	Threshold of B.C. temperature characteristic	0	←	←
23	Incl inat ion of B.C. temperature characteristic	51	“	“
24	Voltage of release lock level	74	〃	←
25	Guaranteed voltage of DC/DC converter	39	←	“
26	Voltage of No power-hold level (O second timer level)	8	←	←
27	Parameter for Cs-mode	13	←	〃
28	Parameter for Cs-mode	25	〃	←
29	Mirror-down pulse number	21	←	“
30	Error flag data		0	0
31	Light metering start time	50	←	←
32	Off delay time of Cs (Temperature shift is disused)	60	←	←
33	Threshold of B.C. temperature characteristic (−5 °C)	251	←	←
34	Inclination of shutter temperature character istic(6. 68μs/deg)	171	-	+
35	Aperture adjustment data	16	-	“
36	Aperture adjustment data	0	←	←
37	Aperture adjustment data	0	+	←
38	Aperture adjustment data	0	-	〃
39	r adjustment of spot metering (writes value in FPC assembl in g)		//	/
40	r adjustment of TTL (-ditto-)		/	/
41-51	Factory used only		/	/
52-127	Shutter release times, Frame number		0	depend ent on lines

Fixed data : Do not change the data except address 8.

Initial data of Main FPC unit for repair parts :
Fixed data and roughly data are written in FPC assembling.

Standard data : These are general data. Data are not yet decided.

Note : Do not change the data address 52 to 127.

* Meaning of address 30 flag data (different from old type CPU)

128 : Power voltage falls below DC/DC converter guaranteed voltage level.
64 : Closing curtain SWfails to turn on even if closing curtain Mg turns off.
8 : Mechanical pulse fails to be output 255ms during charging.
4 : X contact is closed without T setting.
2 : Correct pulses are not output while aperture control is carried.
1 : 40 or more aperture pulses are generated after aperture Mg turns on.

If the above number is writen in the address 30 of EEPROM, it means that the mentioned trouble happened in the camera. If two or more troubles have happened, added number is shown. For example, If the number in address 30 is 192, troubles mentioned in '128 and 64" in the past.

Note : 1. If the shutter is released while depth-of-field oreview button is depressed, the number "2" is written in address 30. The actual trouble did not necessarily occur.
2. After repai r, be sure to change the number in address 30 to "0".

* EEPROM list of Malti Photomic Finder

0 : Compensattion value at center (five-part SPD) l/8EV per lLSB
1 : Compensattion value at upper-left (five-part SPD) l/8EV per lLSB
2: Compensate ion value at upper-right (f ive-part SPD) l/8EV per lLSB
3 : Compensattion value at lower-left (five-part SPD) l/8EV per lLSB
4 : Compensattion value at lower-right (f ive-part SPD) l/8EV per lLSB
5 : Not in use.
6 : Not in use.
7 : Not in use.

Note : If a customer request You to change the meter characteristic to over or under exposure, change the value in address O to 4 by the same degree.