K4XL's BAMA

This manual is provided FREE OF CHARGE from the "BoatAnchor Manual Archive" as a service to the Boatanchor community.

It was uploaded by someone who wanted to help you repair and maintain your equipment.

If you paid anyone other than BAMA for this manual, you paid someone who is making a profit from the free labor of others without asking their permission.

You may pass on copies of this manual to anyone who needs it. But do it without charge.

Thousands of files are available without charge from BAMA. Visit us at http://bama.sbc.edu

INSTRUCTION MANUAL

Serial Number B030241

TYPE 241/R241 PROGRAMMER

Tektronix, Inc.
S.W. Millikan Way ● P. O. Box 500 ● Beaverton, Oregon 97005 ● Phone 644-0161 ● Cables: Tektronix

070-0809-00

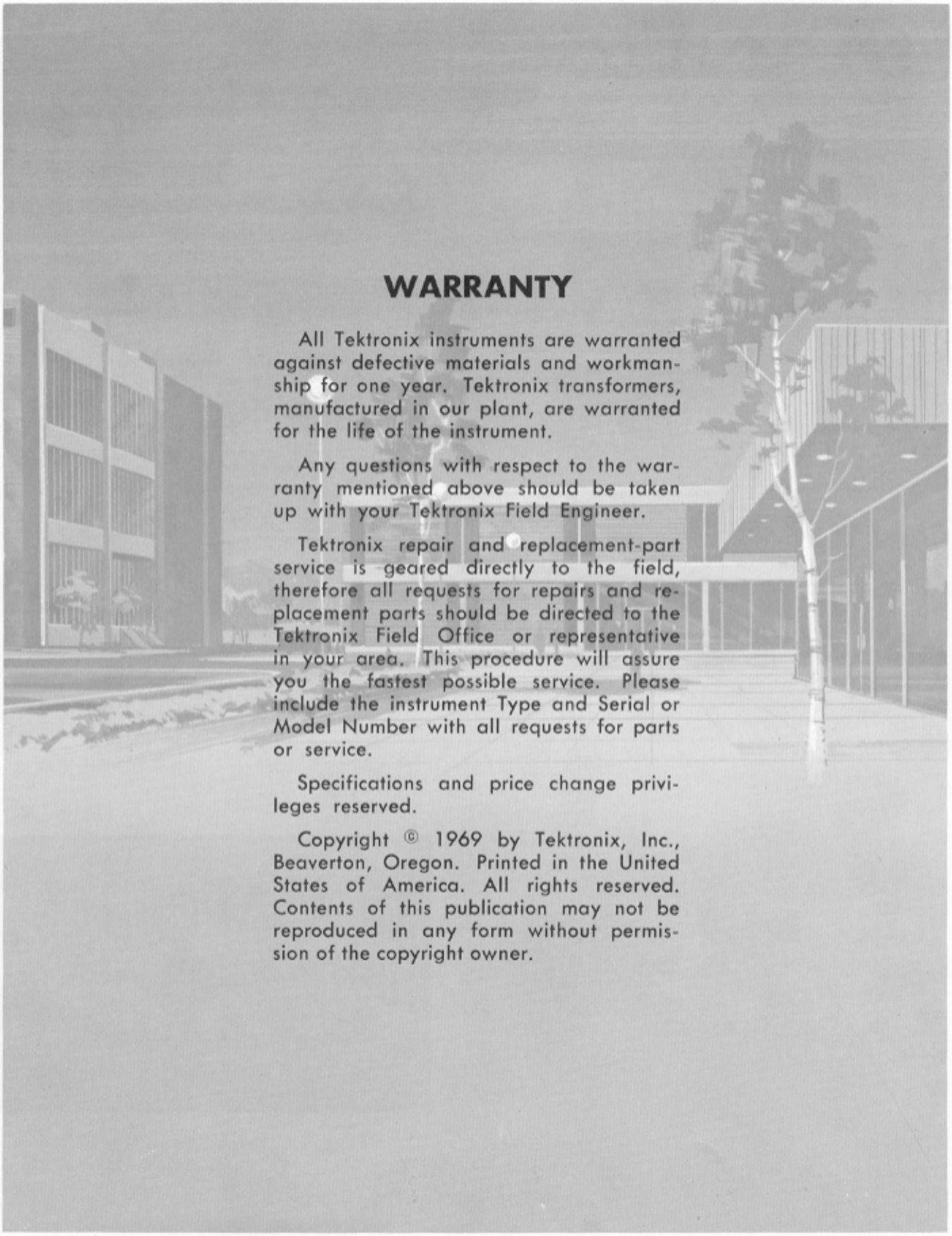

WARRANTY

All Tektronix instruments are warranted against defective materials and workmanship for one year. Tektronix transformers, manufactured in our plant, are warranted for the life of the instrument.

Any questions with respect to the warranty mentioned above should be taken up with your Tektronix Field Engineer.

Tektronix repair and replacement-part service is geared directly to the field, therefore all requests for repairs and replacement parts should be directed to the Tektronix Field Office or representative in your area. This procedure will assure you the fastest possible service. Please include the instrument Type and Serial or Model Number with all requests for parts or service.

Specifications and price change privileges reserved.

Copyright © 1969 by Tektronix, Inc., Beaverton, Oregon. Printed in the United States of America. All rights reserved. Contents of this publication may not be reproduced in any form without permission of the copyright owner.

CONTENTS

Section 1	Specification
Section 2	Operating and Programming Instructions
Section 3	Circuit Description
	Glossary of Digital Terms
	Logic Symbology
Section 4	Maintenance
	Circuit Boards
Section 5	Performance Check
	Abbreviations and Symbols
	Parts Ordering Information
Section 6	Electrical Parts List
	Mechanical Parts List Information
Section 7	Mechanical Parts List
Section 8	Diagrams
	Mechanical Parts List Illustrations
	Accessories
Section 9	Rackmount/Benchmount Instructions

Abbreviations and symbols used in this manual are based on or taken directly from IEEE Standard 260 "Standard Symbols for Units", MIL STD-12B, ASA Y32.14 and other standards of the electronics and computer industries. Change information, if any, is located at the rear of this manual.

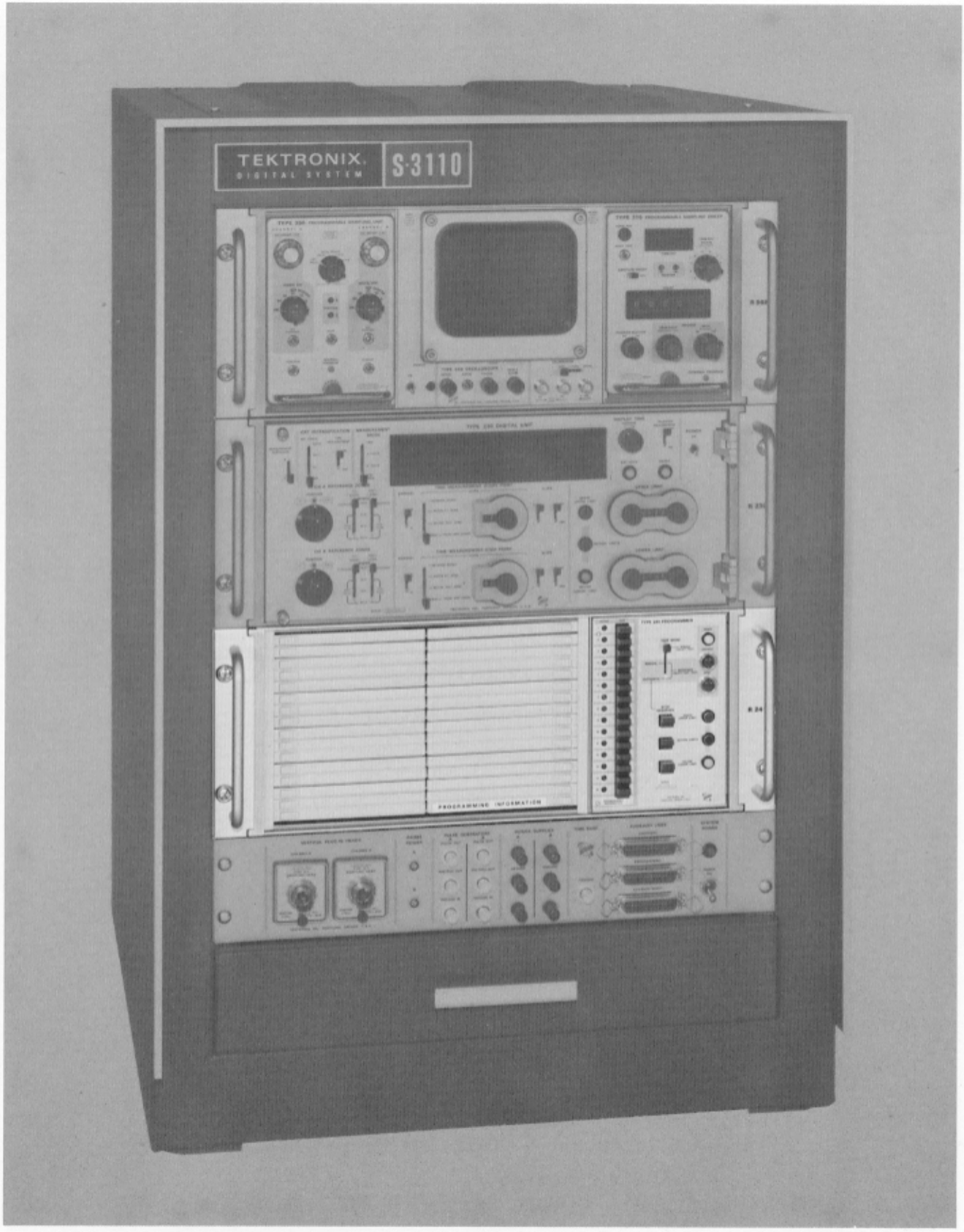

Fig. 1-1. The Tektronix Type R241, installed in a rackmount system.

SECTION 1
SPECIFICATION

Change information, if any, affecting this section will be found at the rear of the manual.

General Information

The Type 241/R241[1] is an external control unit for the Tektronix Type 230 Digital Unit and 3T5/3T6, 3S5/3S6 plug-in units used in the Type 568 Oscilloscope. The Type 241 utilizes 15 wired diode matrix cards to provide 15 tests, each with 159 bits, to completely program all the programmable functions of the Type 568/230.

Fifteen programmed measurements can be selected either by front-panel pushbuttons or by external control lines. Single measurements or automatic or manual sequencing of up to 15 measurements may be made with either front-panel or external control.

The Type 241 can also perform a limited amount of external programming with 14 bits of information available through J303. When one or both of the Type 568 plug-in units are non-programmable, the bits which normally program the plug-in units can also be used to program external equipment.

The Type 241 can program any device that requires contact closures to near ground from a positive source, provided that the voltage and current requirements are within the capability of the Type 241. The Type 241 derives its power from the Type 230 or an external power source.

Programs are easy to set up. A special tool is supplied to make insertion and removal of diodes quick and easy. Diode clips are labeled to permit an operator to program the boards without a great deal of special training. Typically only 15 to 20 diodes need to be inserted for a particular measurement.

The Type 241 program cards are accessible from the front panel and may be easily removed, re-arranged or exchanged with others intended for different tests. A storage area in the back of the Type 241 provides storage for up to 15 additional program cards. A storage drawer holds extra diodes and the diode insertion tool, and also contains Type 241 Program Card information.

Connection to the Type 230, Type 568 and external equipment is made through keyed quick-connect locking type micro-ribbon connectors.

[1]**This manual applies to both the Type 241 (cabinet version) and the Type R241 (rackmount version) unless otherwise noted. The two instruments are electrically identical.**

Operating Modes

Single Test Mode

Measurement programs can be selected singly in any order by pressing the appropriate test pushbuttons on the front panel. External selection of the programs is made by means of ground closures on 15 control lines.

Manual Sequence Mode

Up to 15 measurements may be manually sequenced with the front panel Advance pushbutton or by an external ground closure (REMOTE ADVANCE). By ending the sequence at any selected program, any number of measurements less than 15 can be manually sequenced without including undesired tests.

Automatic Sequence Mode

Up to 15 measurements can be sequenced at a rate of up to approximately 100 measurements per second. Measurement limits may be programmed and out-of-limit conditions can stop the measurement sequence if desired. Limit lights on the front panel indicate the status of each test and the condition which may have interrupted the automatic sequence. The Advance button will then advance the Type 241 to the next measurement in the sequence. The Reset button will reset the Type 241 to a ready condition. Both of these functions can be controlled externally by ground closure. Less than 15 measurements can be automatically sequenced by ending the sequence at any selected program.

Programming Capabilities

The Type 241 Programmer can do any or all of the following:

1. Program the Type 3S5 or 3S6 for Deflection Factor and Offset mV of each channel independently, and Smoothing collectively.

2. Program the Type 3T5 or 3T6 for Sweep Rate and Delay.

3. Select the mode and position of the 0% and 100% reference zones to suit the particular measurement.

4. Start and stop a time measurement:
   a. On the first or second transition (slope).
   b. On a plus or minus slope.
   c. On Channel A or Channel B.

d. Start on one channel, end on the other at any percentage.

e. Start and stop at preselected voltage levels.

5. Program a voltage measurement to start or stop at:

a. 0-159 mm above or below the 0% or 100% zone. (NOTE: Only on-screen displays provide correct measurements.)

b. 0-159% of the voltage between the 0% and 100% zones.

6. Program up to three limit conditions for each measurement. Automatic sequencing may then be stopped on any one of the three limit classifications (above upper limit, within limits or below lower limit).

7. Program the high speed function to control the dot density (sampling only) and reset point of the Type 3T5 or 3T6 Sweep.

Type 230 Digital Unit functions that are not ordinarily programmed by the Type 241 are: DECIMAL 2, DECIMAL 3, DECIMAL 4, EXT SCALE, EXT ÷5, NIXIE 'V', NIXIE 'S', NIXIE 'M', NIXIE 'μ' and NIXIE 'N'. If the operator wishes to program these functions, he can do so by using any of the 14 spares available on the program card. See the Operating Instructions.

NOTES

Electrical Characteristics

Characteristics described in Table 1-1 are valid only when the Type 568/230/241 combination is used and apply over the stated environmental range for instruments calibrated at an ambient temperature from +20°C to +30°C and after a 5 minute warm-up period unless otherwise noted.

TABLE 1-1

ELECTRICAL CHARACTERISTICS

Input/Output Lines

Maximum Current per Program Card: 250 mA
Maximum Current per Diode Line: 20 mA at 2 V or less Output

All inputs are requirements of the driving source. All outputs provide a minimum high level at maximum load to ground, maximum low level at maximum load to a + source.

J201 Type 230/241 Interconnect (Reference Zones)			Performance	
	Input	Output	True	False
Pin 1		A 0% POSITION 8	0 V to +2 V	+6 V to +12 V
Pin 2		A 0% POSITION 4	0 V to +2 V	+6 V to +12 V
Pin 3		A 0% POSITION 2	0 V to +2 V	+6 V to +12 V
Pin 4		A 0% POSITION 1	0 V to +2 V	+6 V to +12 V
Pin 5		A 0% POSITION 0.5	0 V to +2 V	+6 V to +12 V
Pin 6		A 0% PEAK 4 cm	0 V to +2 V	+6 V to +12 V
Pin 7		A 0% PEAK 2 cm	0 V to +2 V	+6 V to +12 V
Pin 8		VOLTS	0 V to +2 V	+6 V to +12 V
Pin 9		A 100% POSITION 8	0 V to +2 V	+6 V to +12 V
Pin 10		A 100% POSITION 4	0 V to +2 V	+6 V to +12 V
Pin 11		A 100% POSITION 2	0 V to +2 V	+6 V to +12 V
Pin 12		A 100% POSITION 1	0 V to +2 V	+6 V to +12 V
Pin 13		A 100% POSITION 0.5	0 V to +2 V	+6 V to +12 V
Pin 14		A 100% PEAK 4 cm	0 V to +2 V	+6 V to +12 V
Pin 15		A 100% PEAK 2 cm	0 V to +2 V	+6 V to +12 V
Pin 16		A CHOP	0 V to +2 V	+6 V to +12 V
Pin 17	PROGRAM COMMON (not internally connected)			
Pin 18	PROGRAM COMMON (not internally connected)			
Pin 19		B 0% POSITION 8	0 V to +2 V	+6 V to +12 V
Pin 20		B 0% POSITION 4	0 V to +2 V	+6 V to +12 V
Pin 21		B 0% POSITION 2	0 V to +2 V	+6 V to +12 V
Pin 22		B 0% POSITION 1	0 V to +2 V	+6 V to +12 V
Pin 23		B 0% POSITION 0.5	0 V to +2 V	+6 V to +12 V
Pin 24		B 0% PEAK 4 cm	0 V to +2 V	+6 V to +12 V
Pin 25		B 0% PEAK 2 cm	0 V to +2 V	+6 V to +12 V
Pin 26		MEASURE AVERAGE	0 V to +2 V	+6 V to +12 V
Pin 27		B 100% POSITION 8	0 V to +2 V	+6 V to +12 V
Pin 28		B 100% POSITION 4	0 V to +2 V	+6 V to +12 V
Pin 29		B 100% POSITION 2	0 V to +2 V	+6 V to +12 V
Pin 30		B 100% POSITION 1	0 V to +2 V	+6 V to +12 V
Pin 31		B 100% POSITION 0.5	0 V to +2 V	+6 V to +12 V
Pin 32		B 100% PEAK 4 cm	0 V to +2 V	+6 V to +12 V
Pin 33		B 100% PEAK 2 cm	0 V to +2 V	+6 V to +12 V

J201 (cont)			Performance	
	Input	Output	True	False
Pin 34		B CHOP	0 V to +2 V	+6 V to +12 V
Pin 35	PROGRAM COMMON (not internally connected)			
Pin 36	PROGRAM COMMON (not internally connected)			

J202 Type 230/241 Interconnect (Start and Stop)

Pin 1		START B CHANNEL	0 V to +2 V	+6 V to +12 V
Pin 2		START HORIZ mm	0 V to +2 V	+6 V to +12 V
Pin 3		START % BETWEEN	0 V to +2 V	+6 V to +12 V
Pin 4		START mm BELOW	0 V to +2 V	+6 V to +12 V
Pin 5		START OFFSET FROM 100%	0 V to +2 V	+6 V to +12 V
Pin 6		START MINUS SLOPE	0 V to +2 V	+6 V to +12 V
Pin 7		START SECOND SLOPE	0 V to +2 V	+6 V to +12 V
Pin 8		RESET INHIBIT	0 V to +2 V	+6 V to +12 V
Pin 9		START OFFSET 80	0 V to +2 V	+6 V to +12 V
Pin 10		START OFFSET 40	0 V to +2 V	+6 V to +12 V
Pin 11		START OFFSET 20	0 V to +2 V	+6 V to +12 V
Pin 12		START OFFSET 10	0 V to +2 V	+6 V to +12 V
Pin 13		START OFFSET 8	0 V to +2 V	+6 V to +12 V
Pin 14		START OFFSET 4	0 V to +2 V	+6 V to +12 V
Pin 15		START OFFSET 2	0 V to +2 V	+6 V to +12 V
Pin 16		START OFFSET 1	0 V to +2 V	+6 V to +12 V
Pins 17 and 18	PROGRAM COMMON (not internally connected)			
Pin 19		STOP B CHANNEL	0 V to +2 V	+6 V to +12 V
Pin 20		STOP HORIZ mm	0 V to +2 V	+6 V to +12 V
Pin 21		STOP % BETWEEN	0 V to +2 V	+6 V to +12 V
Pin 22		STOP mm BELOW	0 V to +2 V	+6 V to +12 V
Pin 23		STOP OFFSET FROM 100%	0 V to +2 V	+6 V to +12 V
Pin 24		STOP MINUS SLOPE	0 V to +2 V	+6 V to +12 V
Pin 25		STOP SECOND SLOPE	0 V to +2 V	+6 V to +12 V
Pin 26	EXT SCALE (not internally connected)			
Pin 27		STOP OFFSET 80	0 V to +2 V	+6 V to +12 V
Pin 28		STOP OFFSET 40	0 V to +2 V	+6 V to +12 V
Pin 29		STOP OFFSET 20	0 V to +2 V	+6 V to +12 V
Pin 30		STOP OFFSET 10	0 V to +2 V	+6 V to +12 V
Pin 31		STOP OFFSET 8	0 V to +2 V	+6 V to +12 V
Pin 32		STOP OFFSET 4	0 V to +2 V	+6 V to +12 V
Pin 33		STOP OFFSET 2	0 V to +2 V	+6 V to +12 V
Pin 34		STOP OFFSET 1	0 V to +2 V	+6 V to +12 V
Pins 35 and 36	PROGRAM COMMON (not internally connected)			

J203 Type 230/241 Interconnect (Limits)

Pin 1		EXT ÷ 2	0 V to +2 V	+6 V to +12 V
Pin 2		UPPER MINUS	0 V to +2 V	+6 V to +12 V
Pin 3		UPPER 2000	0 V to +2 V	+6 V to +12 V
Pin 4		UPPER 1000	0 V to +2 V	+6 V to +12 V
Pin 5		UPPER 800	0 V to +2 V	+6 V to +12 V
Pin 6		UPPER 400	0 V to +2 V	+6 V to +12 V

J203 (cont)	Input	Output	Performance	
			True	False
Pin 7		UPPER 200	0 V to +2 V	+6 V to +12 V
Pin 8		UPPER 100	0 V to +2 V	+6 V to +12 V
Pin 9		UPPER 80	0 V to +2 V	+6 V to +12 V
Pin 10		UPPER 40	0 V to +2 V	+6 V to +12 V
Pin 11		UPPER 20	0 V to +2 V	+6 V to +12 V
Pin 12		UPPER 10	0 V to +2 V	+6 V to +12 V
Pin 13		UPPER 8	0 V to +2 V	+6 V to +12 V
Pin 14		UPPER 4	0 V to +2 V	+6 V to +12 V
Pin 15		UPPER 2	0 V to +2 V	+6 V to +12 V
Pin 16		UPPER 1	0 V to +2 V	+6 V to +12 V
Pins 17 and 18	PROGRAM COMMON (not internally connected)			
Pin 19	EXT ÷ 5 (not internally connected)			
Pin 20		LOWER MINUS	0 V to +2 V	+6 V to +12 V
Pin 21		LOWER 2000	0 V to +2 V	+6 V to +12 V
Pin 22		LOWER 1000	0 V to +2 V	+6 V to +12 V
Pin 23		LOWER 800	0 V to +2 V	+6 V to +12 V
Pin 24		LOWER 400	0 V to +2 V	+6 V to +12 V
Pin 25		LOWER 200	0 V to +2 V	+6 V to +12 V
Pin 26		LOWER 100	0 V to +2 V	+6 V to +12 V
Pin 27		LOWER 80	0 V to +2 V	+6 V to +12 V
Pin 28		LOWER 40	0 V to +2 V	+6 V to +12 V
Pin 29		LOWER 20	0 V to +2 V	+6 V to +12 V
Pin 30		LOWER 10	0 V to +2 V	+6 V to +12 V
Pin 31		LOWER 8	0 V to +2 V	+6 V to +12 V
Pin 32		LOWER 4	0 V to +2 V	+6 V to +12 V
Pin 33		LOWER 2	0 V to +2 V	+6 V to +12 V
Pin 34		LOWER 1	0 V to +2 V	+6 V to +12 V
Pins 35 and 36	PROGRAM COMMON (not internally connected)			

J204 Type 230/241 Interconnect (Control)	Input	Output	Performance	
			True	False
Pin 1	DECIMAL 2	Pins 1 through 8 not internally connected		
Pin 2	DECIMAL 3			
Pin 3	DECIMAL 4			
Pin 4	NIXIE 'V'			
Pin 5	NIXIE 'S'			
Pin 6	NIXIE 'M'			
Pin 7	NIXIE 'μ'			
Pin 8	NIXIE 'N'			
Pin 9		HIGH SPEED	Approximately +1 V	Approximately +3.5 V[2]
Pins 10 through 14	Not internally connected			
Pin 15	A CHOP (not internally connected)			
Pin 16	B CHOP (not internally connected)			
Pin 17	230 PROGRAM COMMON		0 V to +0.1 V at 100 mA or less (ext programmed)	At least +6 V or open (internally programmed)
Pin 18	Chassis Ground			

[2]Pullup provided by Type 3T5/3T6 Sampling Sweep Unit

J204 (cont)	Input	Output	Performance	
			True	False
Pin 19	READ RED		0 V to +2 V[3] at 6 mA or less	Approximately +10 V[3]
Pin 20	READ GREEN		0 V to +2 V[3] at 6 mA or less	Approximately +10 V[3]
Pin 21	READ YELLOW		0 V to +2 V[3] at 6 mA or less	Approximately +10 V[3]
Pin 22	+50 V (not internally connected)			
Pin 23	+12 V		185 mA or less, remainder available on J303	
Pin 24	+3.8 V		150 mA or less	
Pin 25	−3.5 V		2.4 mA or less, remainder available on J303	
Pin 26	−50 V (not internally connected)			
Pin 27	230 PRINT COMMAND		0 V to +2 V[3] at 2 mA or less	Approximately +12 V[3]
			Negative-going pulse:	
			Risetime	500 ns or less
			Width	At least 200 μs
Pin 28	EXT HOLD (not internally connected)			
Pin 29	PLUS TRIGGER (not internally connected)			
Pin 30		230 MINUS TRIGGER	Negative-going pulse[3]:	
			Amplitude	At least 3 V from +12 V
			Risetime	1 μs or less
Pin 31	(Not internally connected)	SWEEP SPEEDUP		
Pin 32	(Not internally connected)	SWEEP RESET		
Pin 33	A CHOP DRIVE		Wired to J303-33	
Pin 34	B CHOP DRIVE		Wired to J303-34	
Pin 35	Ground			
Pin 36	Ground			

J214 Type 568/241 Interconnect (Vertical)

	Input	Output	Performance	
			True	False
Pin 1		A PLUS POLARITY	0 V to +2 V	+6 V to +12 V
Pin 2		A SENSITIVITY 4	0 V to +2 V	+6 V to +12 V
Pin 3		A SENSITIVITY 2	0 V to +2 V	+6 V to +12 V
Pin 4		A SENSITIVITY 1	0 V to +2 V	+6 V to +12 V
Pin 5		A OFFSET 800	0 V to +2 V	+6 V to +12 V
Pin 6		A OFFSET 400	0 V to +2 V	+6 V to +12 V
Pin 7		A OFFSET 200	0 V to +2 V	+6 V to +12 V
Pin 8		A OFFSET 100	0 V to +2 V	+6 V to +12 V
Pin 9		A OFFSET 80	0 V to +2 V	+6 V to +12 V
Pin 10		A OFFSET 40	0 V to +2 V	+6 V to +12 V
Pin 11		A OFFSET 20	0 V to +2 V	+6 V to +12 V
Pin 12		A OFFSET 10	0 V to +2 V	+6 V to +12 V
Pin 13		A OFFSET 5	0 V to +2 V	+6 V to +12 V
Pin 14		B OFFSET 5	0 V to +2 V	+6 V to +12 V
Pin 15		SMOOTH	0 V to +2 V	+6 V to +12 V
Pin 16	A AUTO CAL GND (not internally connected)			
Pin 17	A AUTO CAL (not internally connected)			
Pin 18	B AUTO CAL (not internally connected)			
Pin 19		B PLUS POLARITY	0 V to +2 V	+6 V to +12 V
Pin 20		B SENSITIVITY 4	0 V to +2 V	+6 V to +12 V
Pin 21		B SENSITIVITY 2	0 V to +2 V	+6 V to +12 V
Pin 22		B SENSITIVITY 1	0 V to +2 V	+6 V to +12 V

[3] Provided by Type 230 Digital Unit.

J214 (cont)			Performance	
	Input	Output	True	False
Pin 23		B OFFSET 800	0 V to +2 V	+6 V to +12 V
Pin 24		B OFFSET 400	0 V to +2 V	+6 V to +12 V
Pin 25		B OFFSET 200	0 V to +2 V	+6 V to +12 V
Pin 26		B OFFSET 100	0 V to +2 V	+6 V to +12 V
Pin 27		B OFFSET 80	0 V to +2 V	+6 V to +12 V
Pin 28		B OFFSET 40	0 V to +2 V	+6 V to +12 V
Pin 29		B OFFSET 20	0 V to +2 V	+6 V to +12 V
Pin 30		B OFFSET 10	0 V to +2 V	+6 V to +12 V
Pin 31	Not internally connected			
Pin 32	+300 V (not internally connected)			
Pin 33	+125 V (not internally connected)			
Pin 34	−12.2 V (not internally connected)			
Pin 35	−100 V (not internally connected)			
Pin 36	Ground (not internally connected)			

J224 Type 568/241 Interconnect (Sweep)

Pin 1		DECADE 10^{-8}	0 V to +2 V	+6 V to +12 V
Pin 2		DECADE 10^{-4}	0 V to +2 V	+6 V to +12 V
Pin 3		DECADE 10^{-2}	0 V to +2 V	+6 V to +12 V
Pin 4		DECADE 10^{-1}	0 V to +2 V	+6 V to +12 V
Pin 5		DELAY 200	0 V to +2 V	+6 V to +12 V
Pin 6		MULTIPLIER 4	0 V to +2 V	+6 V to +12 V
Pin 7		MULTIPLIER 2	0 V to +2 V	+6 V to +12 V
Pin 8		MULTIPLIER 1	0 V to +2 V	+6 V to +12 V
Pin 9		DELAY 8000	0 V to +2 V	+6 V to +12 V
Pin 10		DELAY 4000	0 V to +2 V	+6 V to +12 V
Pin 11		DELAY 2000	0 V to +2 V	+6 V to +12 V
Pin 12		DELAY 1000	0 V to +2 V	+6 V to +12 V
Pin 13		DELAY 800	0 V to +2 V	+6 V to +12 V
Pin 14		DELAY 400	0 V to +2 V	+6 V to +12 V
Pin 15	SWEEP RESET (not internally connected)			
Pin 16		DELAY 100	0 V to +2 V	+6 V to +12 V
Pin 17	SWEEP SPEEDUP (not internally connected)			
Pin 18	3T5/3T6 PROG COMMON		0 V to +2 V	+6 V to +12 V
Pin 19		DELAY 80	0 V to +2 V	+6 V to +12 V
Pin 20		DELAY 40	0 V to +2 V	+6 V to +12 V
Pin 21		DELAY 20	0 V to +2 V	+6 V to +12 V
Pin 22		DELAY 10	0 V to +2 V	+6 V to +12 V
Pin 23		DELAY 8	0 V to +2 V	+6 V to +12 V
Pin 24		DELAY 4	0 V to +2 V	+6 V to +12 V
Pin 25		DELAY 2	0 V to +2 V	+6 V to +12 V
Pin 26		DELAY 1	0 V to +2 V	+6 V to +12 V
Pin 27	Not internally connected			
Pin 28	Ground (not internally connected)			
Pin 29	+3.6 V (not internally connected)			
Pins 30 through 35	Not internally connected			
Pin 36	Ground (not internally connected)			

J303 Type 241 Interconnect (Remote Control)			Performance	
	Input	Output	True	False
Pin 1	REMOTE ADVANCE		Current: 2 mA or less	At least +6.5 V 200 nA or less at +6.5 V
			Negative-going pulse: Amplitude Risetime	 At least 5 V 100 ns or less
Pin 2	REMOTE RESET		0 V to +2 V at 2 mA or less	At least +6.5 V
Pin 3		SPARE 1 (PIN 3)	0 V to +2 V	+6 V to +12 V
Pin 4		SPARE 2 (PIN 4)	0 V to +2 V	+6 V to +12 V
Pin 5		SPARE 3 (PIN 5)	0 V to +2 V	+6 V to +12 V
Pin 6		SPARE 4 (PIN 6)	0 V to +2 V	+6 V to +12 V
Pin 7		SPARE 5 (PIN 7)	0 V to +2 V	+6 V to +12 V
Pin 8		SPARE 6 (PIN 8)	0 V to +2 V	+6 V to +12 V
Pin 9		SPARE 7 (PIN 9)	0 V to +2 V	+6 V to +12 V
Pin 10		SPARE 8 (PIN 10)	0 V to +2 V	+6 V to +12 V
Pin 11		SPARE 9 (PIN 11)	0 V to +2 V	+6 V to +12 V
Pin 12		SPARE 10 (PIN 12)	0 V to +2 V	+6 V to +12 V
Pin 13		SPARE 11 (PIN 13)	0 V to +2 V	+6 V to +12 V
Pin 14		SPARE 12 (PIN 14)	0 V to +2 V	+6 V to +12 V
Pin 15		SPARE 13 (PIN 15)	0 V to +2 V	+6 V to +12 V
Pin 16		SPARE 14 (PIN 16)	0 V to +2 V	+6 V to +12 V
Pin 17	ENABLE 1		0 V to +2 V at 350 mA	+6 V to +12 V at 1 mA
		ENABLE 1	0 V to +2 V at 10 mA	+6 V to +12 V at 1 mA
Pin 18	ENABLE 2		0 V to +2 V at 350 mA	+6 V to +12 V at 1 mA
		ENABLE 2	0 V to +2 V at 10 mA	+6 V to +12 V at 1 mA
Pin 19	ENABLE 3		0 V to +2 V at 350 mA	+6 V to +12 V at 1 mA
		ENABLE 3	0 V to +2 V at 10 mA	+6 V to +12 V at 1 mA
Pin 20	ENABLE 4		0 V to +2 V at 350 mA	+6 V to +12 V at 1 mA
		ENABLE 4	0 V to +2 V at 10 mA	+6 V to +12 V at 1 mA
Pin 21	ENABLE 5		0 V to +2 V at 350 mA	+6 V to +12 V at 1 mA
		ENABLE 5	0 V to +2 V at 10 mA	+6 V to +12 V at 1 mA
Pin 22	ENABLE 6		0 V to +2 V at 350 mA	+6 V to +12 V at 1 mA
		ENABLE 6	0 V to +2 V at 10 mA	+6 V to +12 V at 1 mA
Pin 23	+12 V		Within 1% at 165 mA or less when used with Type 230	
Pin 24	ENABLE 7		0 V to +2 V at 350 mA	+6 V to +12 V at 1 mA
		ENABLE 7	0 V to +2 V at 10 mA	+6 to +12 V at 1 mA
Pin 25	–3.5 V		Within 1% at 175 mA or less when used with Type 230	
Pin 26	ENABLE 8		0 V to +2 V at 350 mA	+6 V to +12 V at 1 mA
		ENABLE 8	0 V to +2 V at 10 mA	+6 V to +12 V at 1 mA
Pin 27	ENABLE 9		0 V to +2 V at 350 mA	+6 V to +12 V at 1 mA
		ENABLE 9	0 V to +2 V at 10 mA	+6 V to +12 V at 1 mA
Pin 28	ENABLE 10		0 V to +2 V at 350 mA	+6 V to +12 V at 1 mA
		ENABLE 10	0 V to +2 V at 10 mA	+6 V to +12 V at 1 mA
Pin 29	ENABLE 11		0 V to +2 V at 350 mA	+6 V to +12 V at 1 mA
		ENABLE 11	0 V to +2 V at 10 mA	+6 V to +12 V at 1 mA
Pin 30	ENABLE 12		0 V to +2 V at 350 mA	+6 V to +12 V at 1 mA
		ENABLE 12	0 V to +2 V at 10 mA	+6 V to +12 V at 1 mA
Pin 31	ENABLE 13		0 V to +2 V at 350 mA	+6 V to +12 V at 1 mA
		ENABLE 13	0 V to +2 V at 10 mA	+6 V to +12 V at 1 mA

J303 (cont)			Performance	
	Input	Output	True	False
Pin 32	ENABLE 14		0 V to +1 V at 350 mA	+6 V to +12 V at 1 mA
		ENABLE 14	0 V to +2 V at 10 mA	+6 V to +12 V at 1 mA
Pin 33		A CHOP DRIVE	Wired from J204-33	
Pin 34		B CHOP DRIVE	Wired from J203-34	
Pin 35	ENABLE 15		0 V to +1 V at 350 mA	+6 V to +12 V at 1 mA
		ENABLE 15	0 V to +2 V at 10 mA	+6 V to +12 V at 1 mA
Pin 36	Ground			

TABLE 1-2
Environmental Characteristics

Characteristic	Performance
Ambient Temperature	
Operating	From 0°C to +60°C
Non-operating	From −40°C to +65°C
Maximum Altitude	
Operating	15,000 feet
Non-operating	50,000 feet
Transportation (Package vibration and drop)	Qualified under National Safe Transit Committee Test Procedure 1A, Category I (18 inch drop)

TABLE 1-3
Physical Characteristics

Characteristic	Description	
Dimensions	Type 241	Type R241
Height	8 inches (20.2 cm)	7 inches (17.8 cm)
Width	16 7/8 inches (42.9 cm)	19 inches (48.3 cm)
Depth (overall)	21 3/8 inches (54.2 cm)	22 3/4 inches (57.8 cm)
Finish		
Front Panel	Anodized aluminum	
Cabinet	Blue-vinyl painted aluminum	

NOTES

SECTION 2
OPERATING AND PROGRAMMING INSTRUCTIONS

Change information, if any, affecting this section will be found at the rear of the manual.

General Information

This section of the manual provides the basic information required for operating the Type 241 Programmer. Instructions are included for installing the instrument, using front-panel controls, and connecting the input and output signals from the Type 568 Oscilloscope and Type 230 Digital Unit.

The Type 241 is designed to utilize most programming capabilities of the Type 230 Digital Unit and Type 568 programmable plug-in units Type 3S5/3S6 and 3T5/3T6. If non-programmable plug-in units are used, the Type 241 is still able to program the Type 230 exclusive of the plug-in unit functions. If the vertical sensitivity and horizontal sweep rate of the non-programmable plug-in units can remain the same for all tests, the Type 241 can perform sequential programming in a normal manner.

INSTALLATION

Benchmount/Rackmount

The Type 241 is the benchmount version of this instrument and the Type R241 is the rackmount version. Either may be converted to the other configuration through the use of the hardware illustrated in the Mechanical Parts List. Conversion is described in Section 9.

The Type 241 has a cabinet with top handles and plastic feet for bench operation. A bail-type stand on the bottom of the cabinet permits raising the front end of the instrument about 2 inches for convenient bench operation. The instrument may also be set on the feet mounted on its rear panel.

The handle brackets on the top of the Type 241 cabinet have recesses to accept the feet of instruments with the same cabinet design. This permits instrument stacking for bench-mounted systems. The Type 241 may be stacked with the Type 230 Digital Unit and the Type 568 Oscilloscope.

The Type R241 is equipped with slide-out tracks, pull handles and mounting hardware for mounting in a standard 19-inch-wide rack. Instructions for rackmounting the Type R241 are given in the foldout pages of Section 9.

Operating Voltages

The Type 241 receives its power from the Type 230 Digital Unit via J204 as shown in Fig. 2-1.

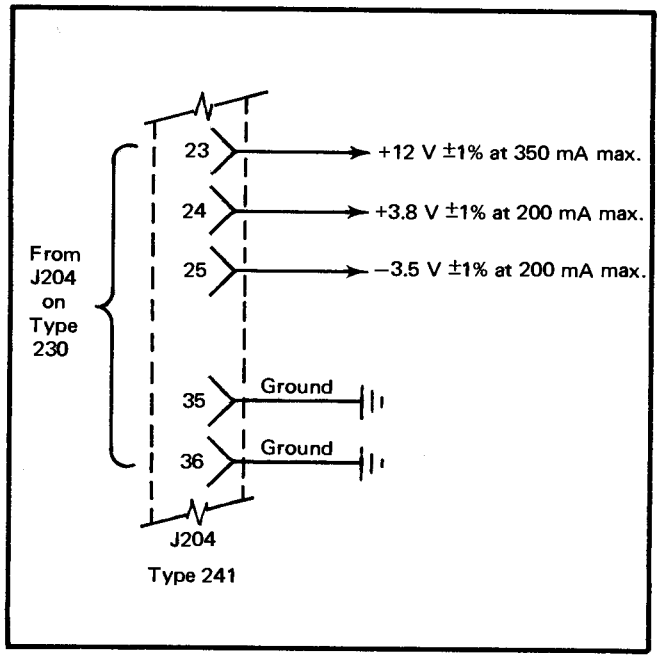

Fig. 2-1. Power inputs through J204 for operation of the Type 241.

FUNCTIONS OF FRONT-PANEL SWITCHES AND INDICATORS (See Fig. 2-2)

Test Mode switch

Single (Select Test). In this mode, a single test can be selected by actuating any one of the 15 Test pushbuttons. It is suggested that the Test Mode switch be in this position for external selection of tests, to avoid conflict with internal test selection. For external selection, all Test pushbuttons must be released. This can be done by exerting a slight pressure of any one of the pushbuttons not actuated.

Manual Sequence (Select Last Test). This mode allows the operator to progress through a sequence of tests in ascending order, starting at Test No. 1, by pressing the Advance button once for each test. If any Test pushbutton is actuated, the sequence terminates at that test After the last test in the sequence has been performed, pressing the Advance button once more resets the Type 241 to the Ready state and disables all tests. Resetting can also be accomplished at any time by pressing the Reset button.

Automatic Sequence (Select Last Test). In this mode, after the Advance button has been pressed, the test

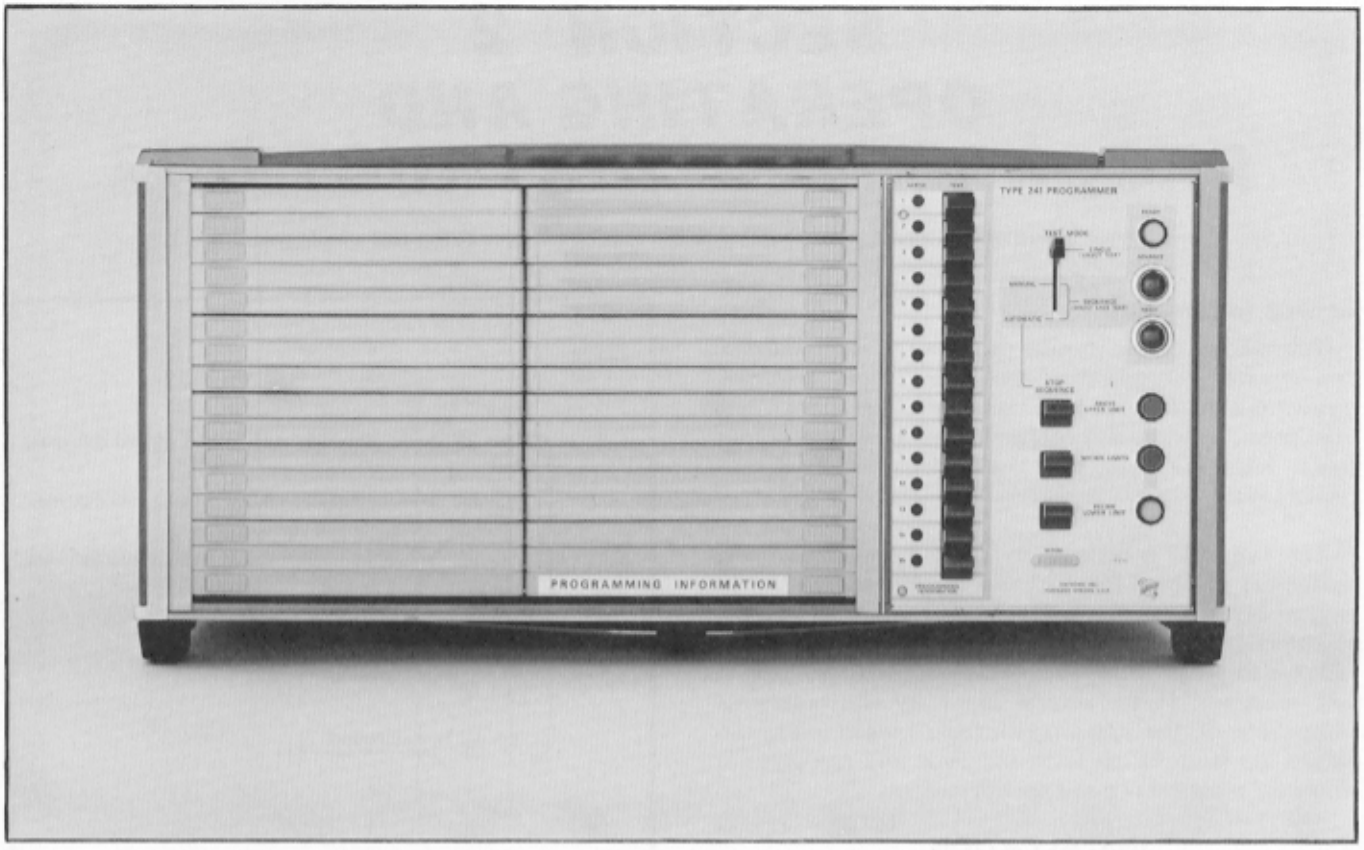

Fig. 2-2. Front-panel controls on the Type 241/R241.

sequence starts at Test No. 1, proceeds automatically through the selected Last Test and resets automatically. The Last Test of any automatic sequence is selected by actuating the associated Test pushbutton before starting the sequence.

Stop Sequence switches

These three switches are operative only when the Test Mode switch is in Automatic Sequence position. Any combination of the three Stop Sequence switches may be actuated. The test sequence is stopped whenever a corresponding Limit lamp turns on. After an out-of-limit or within limits stop has been accomplished, the sequence can be resumed by pressing the Advance button, or can be terminated by pressing the Reset button.

Limit lamps

Above Upper Limit. Lights if the Type 230 readout is above the limit programmed on the active program card.

Within Limits. Lights if the Type 230 Readout is equal to or between the limits programmed on the active program card.

Below Lower Limit. Lights if the Type 230 readout is lower than the limit programmed on the active program card.

Ready lamp

When illuminated, indicates that the Type 230 and Type 3T5/3T6 are externally programmed, that the Type 241 has no program activated, and that the Type 241 is ready to begin a test sequence. The lamp remains illuminated when the Test Mode switch is set to Single (Select Test). When either the Type 230 or the Type 3T5/3T6 are front-panel programmed, the lamp remains off.

Advance button

This button is used when the Test Mode switch is in Manual Sequence or Automatic Sequence position. When the Test Mode switch is at Manual Sequence, pressing the Advance button advances the sequence one test each time the button is pressed until all tests in the sequence are completed. When the Test Mode switch is at Automatic Sequence, pressing the Advance button causes the tests to sequence automatically until all tests in the sequence have been made. The Advance button also initiates a single measurement in the Single mode when the Type 230 Triggered Measurement switch is set to On.

Reset button

Pressing the Reset button puts the Type 241 in a Ready state, as indicated by illumination of the Ready lamp. The Reset button may be used to terminate a sequence at any time.

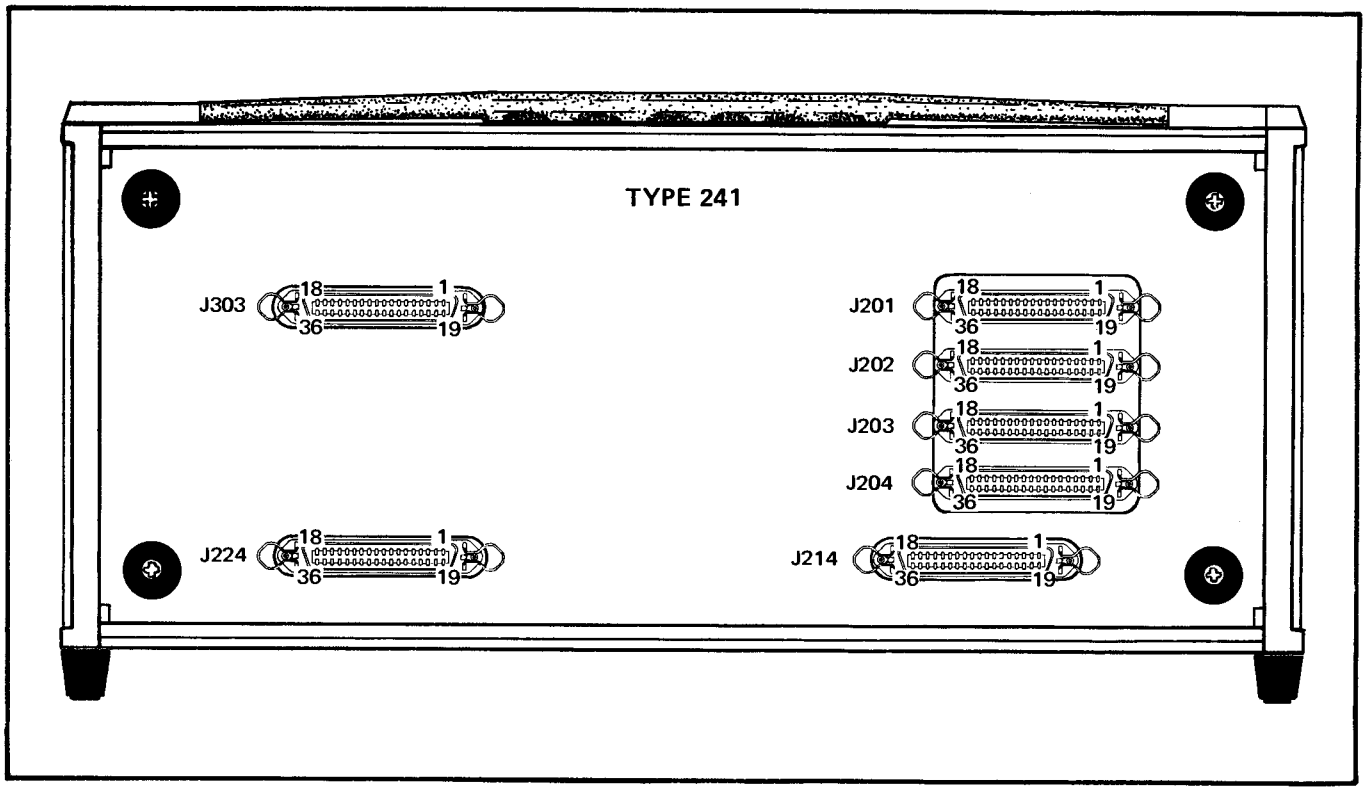

Fig. 2-3. Rear-panel connectors on the Type 241/R241.

Test pushbuttons

The functions of these pushbuttons are dependent on the particular test mode selected. With the Test Mode switch in Single position, selection of any particular test can be performed by actuating the desired Test pushbutton. When the Test Mode switch is at Manual Sequence or Automatic Sequence, the test sequence ends with the test selected by the actuated Test pushbutton.

Active lamps

An illuminated Active lamp indicates which test (program card) is activated.

EXTERNAL INPUT AND OUTPUT INTERCONNECTIONS (See Fig. 2-3)

J201

Program outputs to the Type 230 Digital Unit. J201 controls the Channel A and Channel B memory zone functions and provides VOLTS, A and B CHOP, and MEASURE AVERAGE program information to the Type 230 Clock and Synchronizer. The jack is numbered the same as the corresponding Type 230 connector.

J202

Program outputs to the Type 230 Digital Unit. J202 controls the Start and Stop Comparators and supplies start and stop information to the Clock and RESET INHIBIT to the Synchronizer. The jack is numbered the same as the corresponding Type 230 connector.

J203

Program outputs to the Type 230 Digital Unit. J203 controls the Upper and Lower Limits and provides EXT ÷ 2 program information to the Clock. The jack is numbered the same as the corresponding Type 230 connector.

J204

Conveys 230 MINUS TRIGGER, HIGH SPEED PROGRAM, 230 PRINT COMMAND, limit readout information, A and B CHOP DRIVE, 230 PROGRAM COMMON and power supply voltages between the Type 241 and the Type 230. The jack is numbered the same as the corresponding Type 230 connector.

J214

Program outputs on the vertical plug-in unit, such as the Type 3S5/3S6, used with the Type 568 Oscilloscope. The jack is numbered the same as the corresponding Type 568 connector.

J224

Conveys program outputs to the horizontal plug-in unit (such as the Type 3T5/3T6) used with the Type 568 Oscilloscope, and 3T5/3T6 PROGRAM COMMON from the plug-in unit to the Type 241. The jack is numbered the same as the corresponding Type 568 connector.

J303

Provides spare program lines and external control lines for the Type 241 and conveys A and B CHOP DRIVE to the Chopper unit.

PROGRAM CARDS

General Information

The Type 241 Programmer comes equipped with 15 program cards. Each program card controls one measurement and has a 159-bit capacity, which is enough to control the Type 568/230 with Type 3S5 or 3S6 and Type 3T5 or 3T6 programmable plug-in units. In addition, there are 14 unassigned bit positions which may be used to control other programmable equipment.

Programs are easy to build by placing diodes in clips on the program cards. Each pair of diode clips is identified with a functional title to aid the operator. The diodes are to be inserted with the cathode of each diode pointing to the right (as viewed from the front of the instrument). Each diode that is inserted selects the true (grounded) condition of the program line. Lines that are not programmed with diodes remain false.

Three packages of 150 specially prepared diodes are shipped with the instrument for use on the program cards. The anode leads of these diodes are clipped shorter than the cathode leads. A package of 150 diodes may be ordered by using Tektronix Part Number 016-0254-00. Typically Only 15 to 20 diodes need to be inserted for any particular measurement. Diodes with tin-plated leads (Tektronix Part No. 152-0141-03, package of 450) are to be used with program cards that have tin-plated diode clips. Diodes with gold plated leads (Tektronix Part No. 152-0141-04, package of 450) are plated diode clips. A special tool (Tektronix Part Number 003-0611-00) is designed to make insertion and removal of the diodes quick and easy. One end of the tool is polarity-keyed for proper insertion of the diodes into the clips. See Fig. 2-4. The other end of the tool is used for removing the diodes. Two insertion tools are provided with each instrument.

If a corrosive environment is encountered, it may be advisable to solder the diodes into the clips after the test format has been firmly established.

The bottom space (16th position) contains a pull-out drawer with Type 241 Program Card Information and storage space for the program diodes and diode insertion tool. See Fig. 2-5. The drawer cover is inscribed with program information containing tables for BCD programming of the Tektronix Type 3S5/3S6 Sampling Unit and Type 3T5/3T6 Sampling Sweep Unit.

Programming Information

Before setting up a program card, it is advisable to lay out the desired test on the Test Format provided for this purpose. The Test Format displays all of the functions available for that particular test. A line between two adjacent circles represents a function to be programmed, and corresponds to a diode inserted in corresponding clips on the program card.

Most of the functions on the program card are self explanatory, but a few require clarification. Information for the Type 3S5/3S6 Vertical Sensitivity and Type 3T5/3T6 Sweep are described on a chart contained in the Programming Information Drawer and indicated by Δ. This chart is included with additional programming information on the back side of the Test Formats.

In neither PEAK 4 nor PEAK 2 under REF ZONES are programmed true, a zone width of 0.3 cm is selected, with

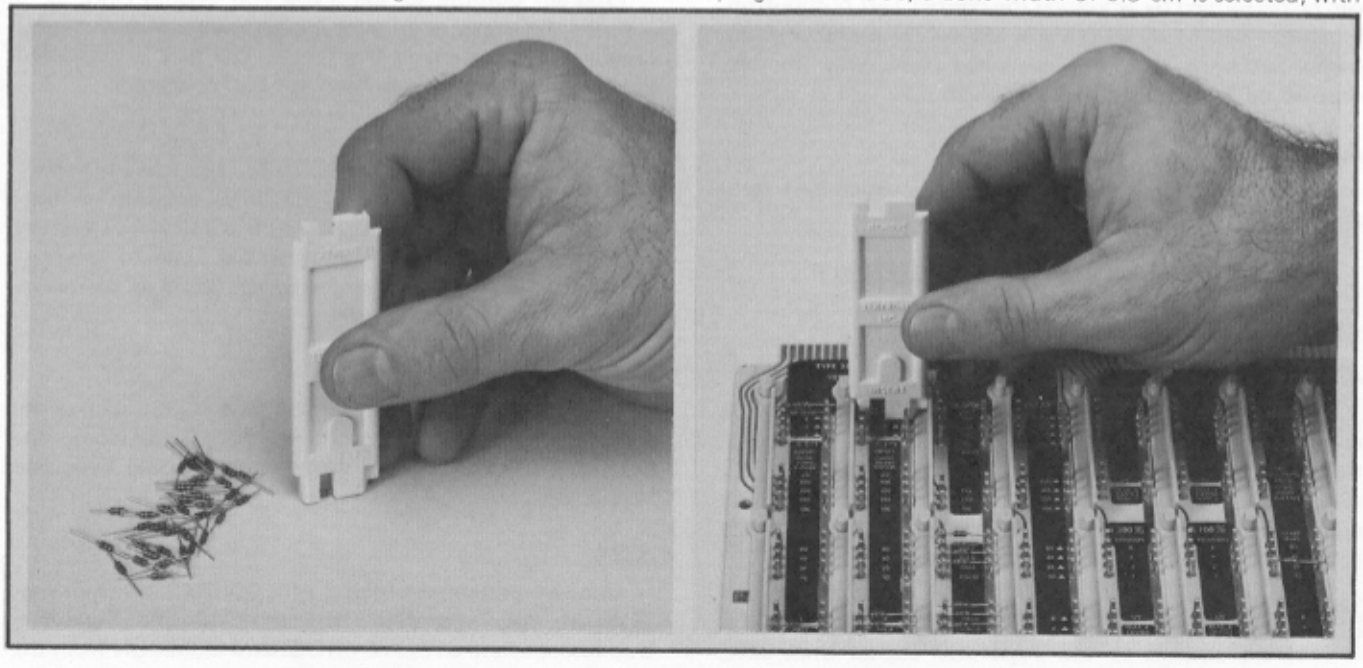

Fig. 2-4. Picking up and inserting a diode with the insertion tool provided.

©

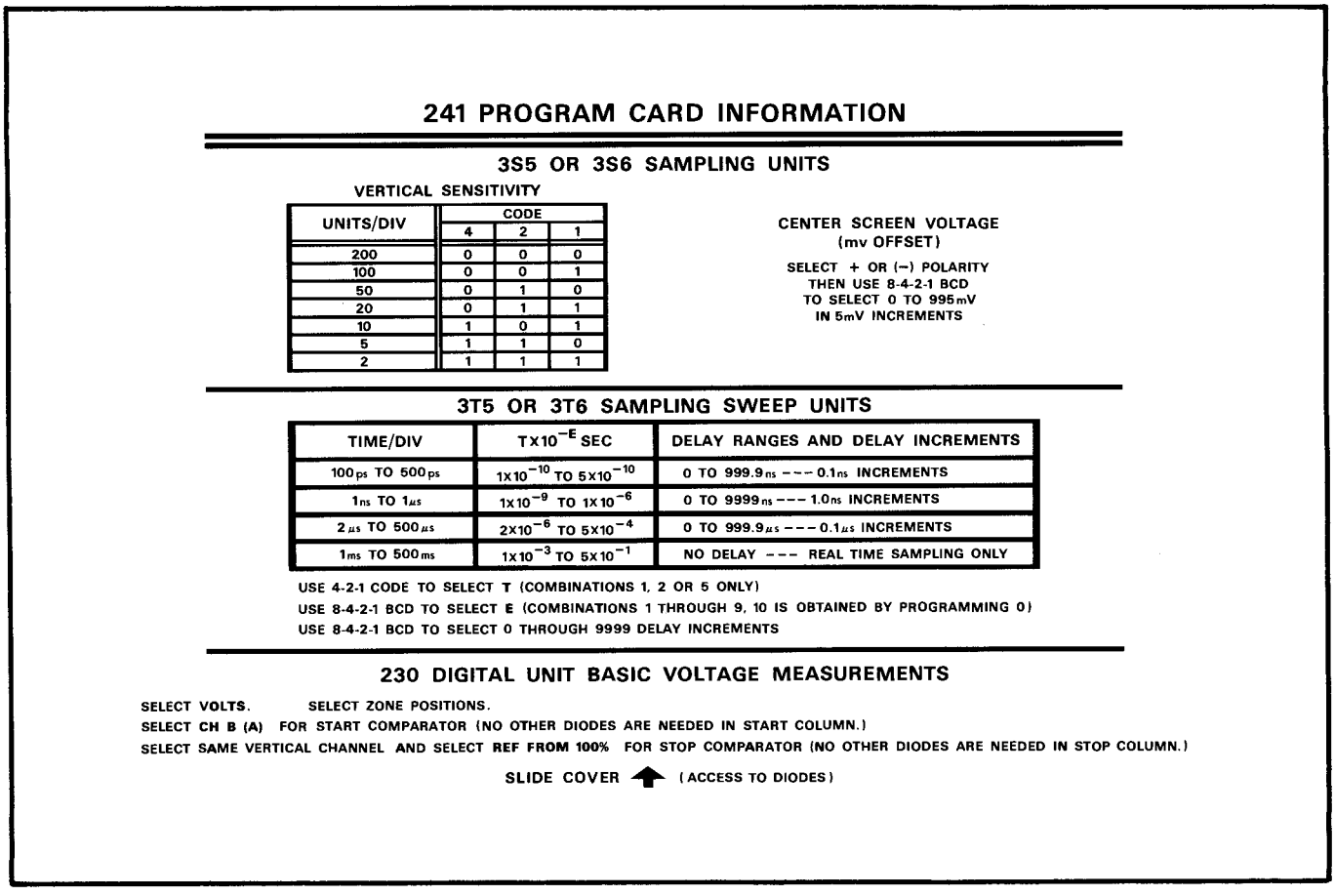

241 PROGRAM CARD INFORMATION

3S5 OR 3S6 SAMPLING UNITS

VERTICAL SENSITIVITY

UNITS/DIV	CODE 4	2	1
200	0	0	0
100	0	0	1
50	0	1	0
20	0	1	1
10	1	0	1
5	1	1	0
2	1	1	1

CENTER SCREEN VOLTAGE (mv OFFSET)

SELECT + OR (−) POLARITY THEN USE 8-4-2-1 BCD TO SELECT 0 TO 995mV IN 5mV INCREMENTS

3T5 OR 3T6 SAMPLING SWEEP UNITS

TIME/DIV	TX10^{-E} SEC	DELAY RANGES AND DELAY INCREMENTS
100ps TO 500ps	1X10^{-10} TO 5X10^{-10}	0 TO 999.9ns --- 0.1ns INCREMENTS
1ns TO 1μs	1X10^{-9} TO 1X10^{-6}	0 TO 9999ns --- 1.0ns INCREMENTS
2μs TO 500μs	2X10^{-6} TO 5X10^{-4}	0 TO 999.9μs --- 0.1μs INCREMENTS
1ms TO 500ms	1X10^{-3} TO 5X10^{-1}	NO DELAY --- REAL TIME SAMPLING ONLY

USE 4-2-1 CODE TO SELECT T (COMBINATIONS 1, 2 OR 5 ONLY)
USE 8-4-2-1 BCD TO SELECT E (COMBINATIONS 1 THROUGH 9, 10 IS OBTAINED BY PROGRAMMING 0)
USE 8-4-2-1 BCD TO SELECT 0 THROUGH 9999 DELAY INCREMENTS

230 DIGITAL UNIT BASIC VOLTAGE MEASUREMENTS

SELECT VOLTS. SELECT ZONE POSITIONS.
SELECT CH B (A) FOR START COMPARATOR (NO OTHER DIODES ARE NEEDED IN START COLUMN.)
SELECT SAME VERTICAL CHANNEL AND SELECT REF FROM 100% FOR STOP COMPARATOR (NO OTHER DIODES ARE NEEDED IN STOP COLUMN.)
SLIDE COVER ↑ (ACCESS TO DIODES)

Fig. 2-5. Type 241 program card information contained on the cover of the Program Information drawer.

AVERAGE memory charging. To obtain a zone width of 10 cm, both PEAK 4 and PEAK 2 must be programmed true.

HOR mm, %, mm BELOW and mm ABOVE, under Comparator START and STOP, are exclusive functions. Only one START function and one STOP function can be programmed in any one test.

Program Card Labels

A supply of 30 pre-gummed stick-on labels are provided with the Type 241 for identification of the tests set up on the program cards. Information can be typewritten or printed on the labels, which are then to be attached to the release handles of the cards. To prevent smearing of the printed information, the labels may be coated with spray-on clear lacquer or acrylic.

Additional labels may be obtained through your Tektronix representative or field office. Order Tektronix Part No. 334-1337-00.

FIRST-TIME OPERATION

Introduction

The following procedure illustrates the use of the front-panel controls in the various measurement modes to familiarize the operator with the instrument. It is recommended that the operator follow this procedure completely for the first-time operation.

Required Equipment

In addition to the Type 241, the following equipment will be required for this operation:

a. Tektronix Type 568 Oscilloscope with two sampling plug-in units installed (Type 3S5 or 3S6 Sampling Unit with Type S1 Sampling Heads and Type 3T5 or 3T6 Sampling Sweep).[1] These plug-in units must be equipped with etched circuit connectors (Tektronix Part No. 388-0805-00) inserted in the programming jacks on the rear of each unit.

b. Tektronix Type 230 Digital Unit.

c. Tektronix Type 114 Pulse Generator or equivalent.

d. Interconnecting cables:

[1] **The Type 3S5/S1 Sampling Head and Type 3T5 will be used in the remainder of this procedure.**

Quantity	Tektronix Part No.	Description
(1)	012-0119-00	J101 cable
(5)	012-0131-00	J201 cable J202 cable J203 cable J214 cable J224 cable
(1)	012-0131-01	J204 cable

These cables are keyed for the proper "J" designations. See the Accessories fold-out.

e. Two coaxial cables: Characteristic impedance 50 ohms, BNC connectors. Tektronix Part No. 012-0057-01.

f. Adapter: GR to BNC Female. Tektronix Part No. 017-0063-00.

g. Two 50-ohm 2:1 Attenuators. Tektronix Part No. 011-0069-00.

Equipment Setup

1. Connect the J101 cable between J101 of the Type 230 and J101 of the Type 568.

2. Connect the J201 cable between J201 of the Type 230 and J201 of the Type 241.

3. Connect the J202 cable between J202 of the Type 230 and J203 of the Type 241.

4. Connect the J203 cable between J203 of the Type 230 and J203 of the Type 241.

5. Connect the J204 cable between J204 of the Type 230 and J204 of the Type 241.

6. Connect the J214 cable between J214 of the Type 568 and J214 of the Type 241.

7. Connect the J224 cable between J224 of the Type 568 and J224 of the Type 241.

8. Connect the output of the Tektronix Type 114 Pulse Generator through a 50-ohm cable, a 50-ohm 2:1 attenuator and a GR to BNC adapter to the Channel A vertical input of the Type 3S5.

9. Connect the trigger output of the Type 114 pulse Generator through a 50-Ω cable and a 50-Ω 2:1 attenuator to the external Trigger Input of the Type 3T5.

10. Connect the Type 230, the Type 568 and the Type 114 to a power source that meets the voltage and frequency requirements of the instruments.

11. Turn on all power switches.

NOTE

Certain adjustments must be made for the instruments to be completely compatible with one another. These include Vertical Gain, Position, Dot Response, Horizontal Gain and other adjustments, to provide the most accurate measurements with the system. Consult the Type 568, Type 230, Type 3S5, and Type 3T5 instruction manuals for initial adjustments. These adjustments must be made before proceeding further in this section.

12. While the instruments are warming up, set the front-panel controls as follows:

Type 568

Intensity	Normal brightness
Focus	As desired
Scale Illumination	As desired
Calibrator	Off
CRT Cathode Selector (Rear panel switch)	Chopped Blanking

Type 3S5/S1

Mode	Ext Prog
Invert	Normal
Other controls	As desired

Type 3T5

Program Selector	Ext
Trigger Mode	Ext
Trigger Polarity	+
Trigger Sensitivity	Adjust for a free-running trace

Type 230

Ref Zones	Both
Time Measurement	On
Measurement Mode	Ext Prog
Display Time	Midrange
Triggered Measurement	Off

Type 241

Test Mode	Single (Select Test)

Type 114

Period	10 μs
Variable	Cal
Width	Square Wave
Amplitude	+1 to 3 V
Variable	Counterclockwise
Trigger	Trailing Edge

13. Using the Type 3T5 Horiz Pos control, position the trace to start at the left edge of the graticule.

If the operator is not familiar with the operation of the Type 230 and Type 568 combination, it would be advisable

at this time to set up some front-panel measurements without the use of the Type 241 external programming. Refer to the Type 230 Digital Unit instuction manual.

Sample Test Programs

To demonstrate the use of the Type 241 and proper programming of the program cards, a test sequence has been set up consisting of four separate tests.

Test No. 1--Amplitude Measurement

Refer to Fig. 2-6 and set up a program card with diodes as follows:

1. Type 3S5 VERTICAL (Channel A only). The 1 bit programmed true sets the vertical sensitivity to 100 mV/div.

The + function programmed true selects a positive OFFSET Center Screen Voltage so that the programmed OFFSET will move the trace downward.

The combination of 100 and 200 programmed true sets the offset voltage at 300 mV.

Channel B is not programmed in this test. If a Type S1 Sampling Head is inserted in this channel it may be desirable to program an offset voltage, placing the unwanted trace off-screen.

2. Type 3T5 SWEEP. The T=1, E=2 and E=4 bits programmed true set the SEC/DIV to 1 X 10^{-6} (1 μs).

DELAY 100 programmed true delays the sweep 100 ns to place the first slope of the waveform near the center of the CRT screen. This function may vary slightly, so the amount of delay may have to be adjusted by the operator.

3. Type 230 REF ZONES. Channel A 0% functions are all programmed false so that the Ch A 0% zone starts at the first vertical graticule line and the Ch A 0% memory charges to the average value of the signal during this zone.

The Channel A 100% POSITION 4 and 2 bits are programmed true to place the Ch A 100% zone at the 6-cm vertical graticule line. AVERAGE level is also selected by not programming PEAK 4 and/or PEAK 2.

At the bottom of the A 100% column, VOLTS is programmed true to select a voltage measurement for this test.

Channel B REF ZONES functions are all programmed false. AVERAGE of 8 is not programmed, so NORMAL (average-of-one) measurement mode is selected.

4. Type 230 COMPARATOR START. Programming all of the functions false selects CH A mm ABOVE, REF FROM 0% and 1st + SLOPE. This causes the Type 230 Start Comparator to fire at zero millimeters above the A 0% memory level.

Since it is not desired to accumulate a series of test results in the Type 230 readout, RESET INHIBIT is left false.

5. Type 230 COMPARATOR STOP. Programming REF FROM 100% true and leaving all other functions false selects the same functions as for the Start Comparator, except that the Stop Comparator fires at zero millimeters above the A 100% reference level.

6. Type 230 LIMITS. A combination of 400, 100, 4 and 1 programmed true in the UPPER column sets the UPPER LIMITS to +505 mV.

A combination of 400, 80, 10, 4 and 1 programmed true in the LOWER column sets the LOWER LIMITS to +495 mV.

By leaving the first bit in each column false, a positive limit is selected. The EX ÷ 2 function at the bottom of the LOWER column is inhibited by being programmed false.

This concludes the selection of all the functions required to perform the first test.

Validate the program card setup by inserting the card in the first Test position of the Type 241 and actuating the No. 1 Test pushbutton. Adjust the Type 3T5 Trigger Sensitivity control to trigger the display. If the Type 114 is used as the signal source, the performance of the programmed limits can be checked as follows:

a. Adjust the amplitude of the Type 114 until the Type 230 Digital Unit readout indicates +0500. mV ±2 mV. The Type 241 Within Limits green lamp is illuminated.

b. Increase the output of the Type 114 so that the Type 230 Digital Unit readout indicates a voltage readout of +0506. mV or greater. The Above Upper Limit lamp is illuminated, indicating an out-of-limit condition.

c. Decrease the output of the Type 114 so that the Type 230 Digital Unit readout indicates a voltage readout of +0494. mV or less. The Below Lower Limit lamp should be the only one illuminated, indicating an out-of-limit condition.

d. Return the amplitude of the Type 114 to +0500. mV.

Test No. 2--Period Measurement

Refer to Fig. 2-7 and set up a program card with diodes in a manner similar to that done with Test No. 1.

a. Place the completed program card in the second Test position of the Type 241 and actuate the corresponding Test pushbutton. The Type 230 Digital Unit readout indicates a period of approximately +10.00 μS.

b. Change the Period switch to the Type 114 from 10 μs to 1 μs and adjust the Period Variable control until the Type 230 Digital Unit readout indicates a period of +10.00 μS and the green Within Limits lamp is illuminated.

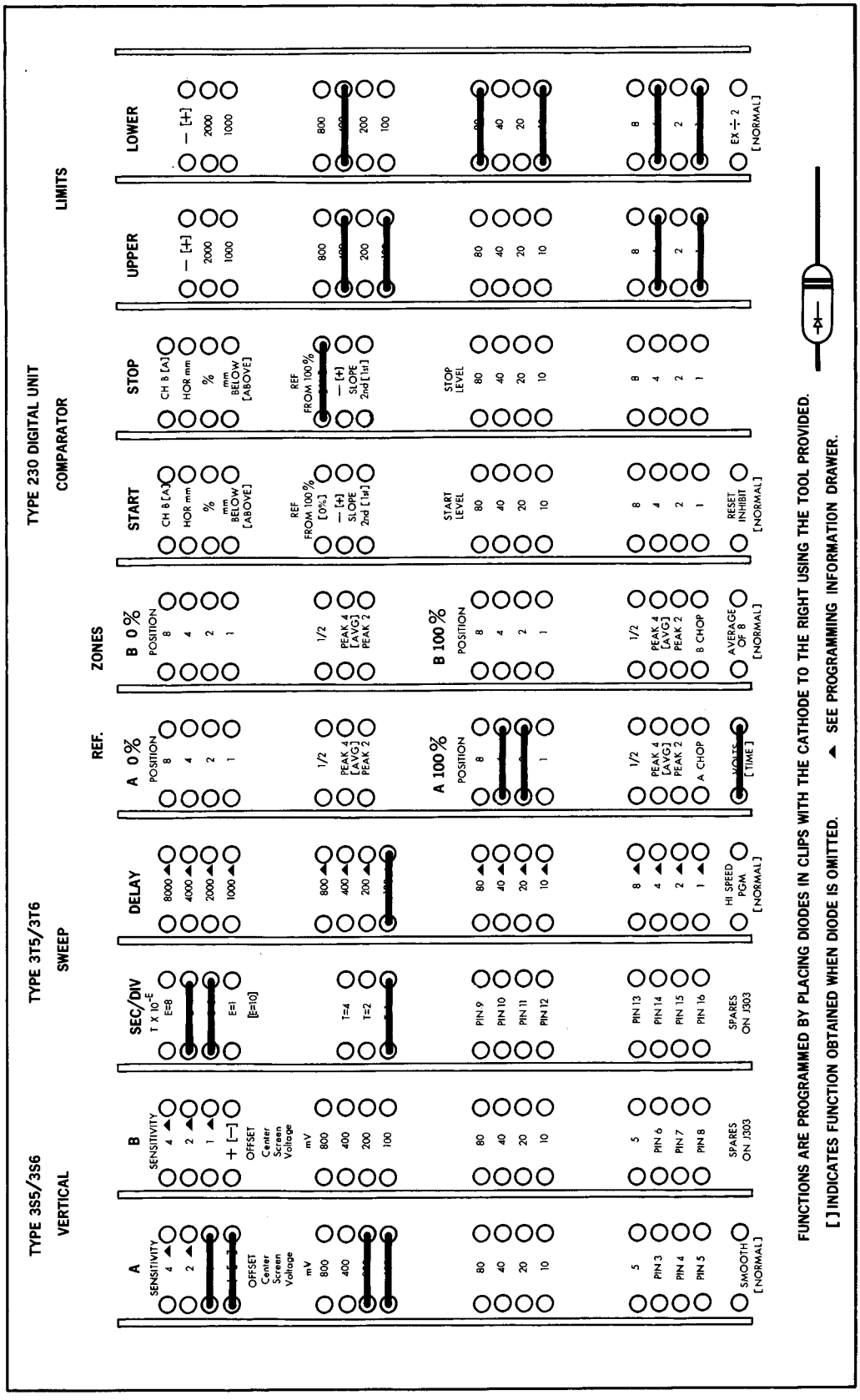

See back side of Format for additional programming information.

TEST NUMBER 1 TEST DESCRIPTION *Amplitude Measurement*

PROGRAM NOTES

Vertical Sensitivity	*100 mV/div*	*Limits*	*+0505 (Upper)*	
Offset	*+300 mV*		*+0495 (Lower)*	
Sweep Rate	*1 µs/div*			
Delay	*100 ns*			

Fig. 2-6.

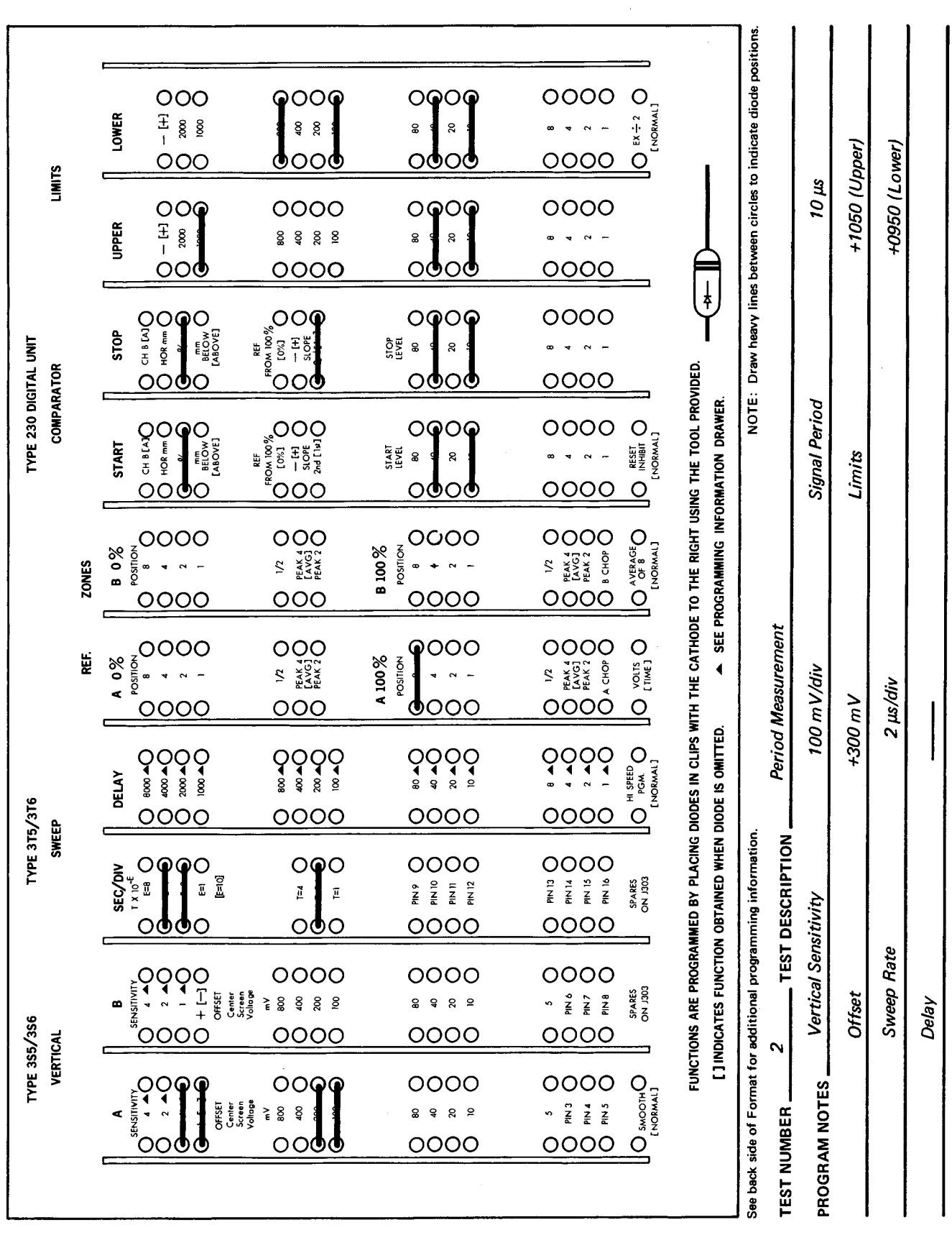
TYPE 241 TEST FORMAT
Tektronix Part Number 070-0908-00
TYPE 3S5/3S6
VERTICAL
TYPE 3T5/3T6
SWEEP
TYPE 230 DIGITAL UNIT
COMPARATOR
LIMITS
REF.
ZONES
A
B
SEC/DIV
DELAY
A 0%
B 0%
START
STOP
UPPER
LOWER
SENSITIVITY
OFFSET
Center Screen Voltage
SMOOTH [NORMAL]
SPARES ON J303
PIN 3
PIN 4
PIN 5
PIN 6
PIN 7
PIN 8
PIN 9
PIN 10
PIN 11
PIN 12
PIN 13
PIN 14
PIN 15
PIN 16
HI SPEED PGM. [NORMAL]
A 100%
B 100%
POSITION
PEAK 4 [AVG]
PEAK 2
A CHOP
B CHOP
VOLTS [TIME]
AVERAGE OF 8 [NORMAL]
CH B [A]
HOR mm
mm BELOW [ABOVE]
REF FROM 100% [0%]
— [+] SLOPE
2nd [1st]
START LEVEL
STOP LEVEL
RESET INHIBIT [NORMAL]
— [+]
EX ÷ 2 [NORMAL]
FUNCTIONS ARE PROGRAMMED BY PLACING DIODES IN CLIPS WITH THE CATHODE TO THE RIGHT USING THE TOOL PROVIDED.
[ ] INDICATES FUNCTION OBTAINED WHEN DIODE IS OMITTED.
▲ SEE PROGRAMMING INFORMATION DRAWER.
NOTE: Draw heavy lines between circles to indicate diode positions.
See back side of Format for additional programming information.
TEST NUMBER 2 TEST DESCRIPTION Period Measurement
PROGRAM NOTES Vertical Sensitivity 100 mV/div Signal Period 10 µs
Offset +300 mV Limits +1050 (Upper)
Sweep Rate 2 µs/div +0950 (Lower)
Delay —

Fig. 2-7.

c. Increase the Type 114 Period Variable setting so that the Type 230 Digital Unit readout indicates +10.52 μS or more. The red Above Upper Limit lamp is the only one illuminated, indicating an out-of-limit condition.

d. Decrease the Type 114 Period Variable setting so that the Type 230 Digital Unit indicates a readout of +09.48 μS or less. The yellow Below Lower Limit lamp is the only one illuminated, indicating an out-of-limit condition.

Test No. 3--Horizontal Sweep Measurement

a. This test verifies the sweep used in the next test (Risetime Measurement). Refer to Fig. 2-8 and set up a program card.

b. Place the completed program card in the third Test position of the Type 241 and actuate the corresponding Test pushbutton. The Type 568 CRT displays an intensified sweep. The sweep time is measured from the 1-cm vertical graticule line to the 9-cm vertical graticule line with the Type 230 Digital Unit readout displaying a time interval of +040.0 nS ±3%. This time interval in 8 centimeters represents a horizontal sweep rate of 5 ns/div.

Test No. 4--Risetime Measurement Using Type 114

a. Refer to Fig. 2-9 and set up a program card in a manner similar to the previous test, with the addition of programming Sweep DELAY.

b. The amount of delay required to display the positive slope on the CRT screen may vary from one system to another. It is suggested that the following procedure be used in selecting the correct amount of delay:

1. Switch the Type 3T5 Program Selector switch to Int, set the Time/Div switches to 5 X 10^{-9} (5 ns), and adjust the Delay dials until the positive slope of the square wave is displayed on the Type 568 CRT screen.

2. Program the DELAY functions on the program card to the value indicated on the Type 3T5 Delay dials which, in the example given in Fig. 2-9 is 5000 ns.

c. Insert the program card into the fourth Test position and actuate the corresponding Test pushbutton.

d. Switch the Type 3T5 Program Selector switch to Ext. This should result in a display similar to that obtained in Int mode, except for display amplitude and intensification.

e. Note the Type 230 Digital Unit readout. It should indicate a risetime of approximately +007.0 nS.

f. Remove the program card from the instrument and program the Type 230 Limits to permit a 0.1 ns variation from the displayed risetime. For this example, the Limits are set to +0071 (UPPER) and +0069 (LOWER).

g. Return the program card to the fourth Test position of the Type 241.

The procedure for programming this test using another signal source is similar to that used with the Type 114 except that a different TIME/DIV and a different amount of DELAY may be necessary, since the Type 230 Digital Unit readout value for the risetime may be different. The UPPER and LOWER LIMITS should correspond to the actual readout.

Operational Procedure

Manual Sequence

a. Set the Type 230 Triggered Measurement switch to On.

b. Switch the Type 241 Test Mode switch to Manual Sequence.

c. Actuate the Test pushbutton of the last test (Test No. 4 in this particular sequence) to prevent sequencing past the last test and selecting unprogrammed tests.

d. Press the Advance button; Test No. 1 should be displayed.

e. Continue pressing the Advance button to select Test Nos. 2, 3, and 4.

f. After the last test has been displayed, press the Advance button again. The Type 241 resets to the ready state and awaits the initiation of a new test sequence.

Automatic Sequence

a. Change the Test Mode switch to Automatic Sequence position and press the Advance button. Starting with Test No. 1, automatic sequencing occurs until all of the tests through the selected last test have been performed. If the No. 4 Test pushbutton is still activated, the Type 241 will return to the ready state after Test No. 4 has been completed.

b. To stop a sequence on any particular limit condition, it is necessary to actuate one of the three front-panel Stop Sequence pushbuttons (or any combination of these pushbuttons) before starting the sequence. The sequence may be stopped and the Type 241 reset at any time by pressing the Reset button.

High Speed

It is possible to speed up the sequencing of tests by programming HIGH SPEED on the individual program cards. Speed-up is accomplished by decreasing the dot density (in sampling only) during the portions of the sweep outside of the zones of interest, and by resetting the sweep at the end of the last zone.

A sample of high-speed operation can be observed by using the previous programmed tests and programming HIGH SPEED on each card.

TYPE 241 TEST FORMAT

Tektronix Part Number 070-0908-00

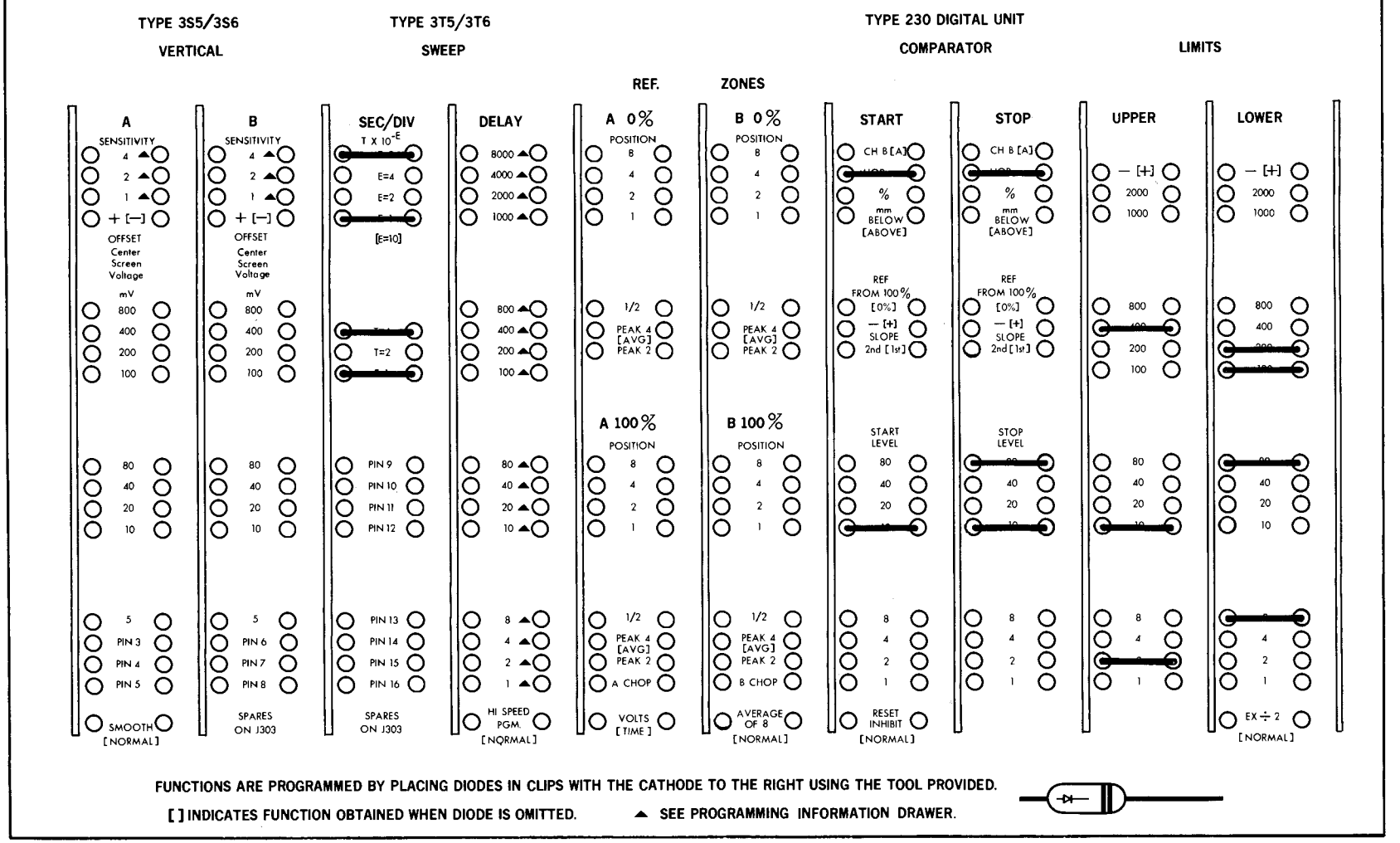

See back side of Format for additional programming information.

NOTE: Draw heavy lines between circles to indicate diode positions.

TEST NUMBER 3 TEST DESCRIPTION *Horizontal Sweep Measurement*

PROGRAM NOTES				
	Vertical Sensitivity	———	*Readout*	*+040.0 ns ±3%*
	Offset	———	*Limits*	*+0412 (Upper)*
	Sweep Rate	*5 ns/div*		*+0388 (Lower)*
	Delay	———		

Fig. 2-8.

TYPE 241 TEST FORMAT

Tektronix Part Number 070-0908-00

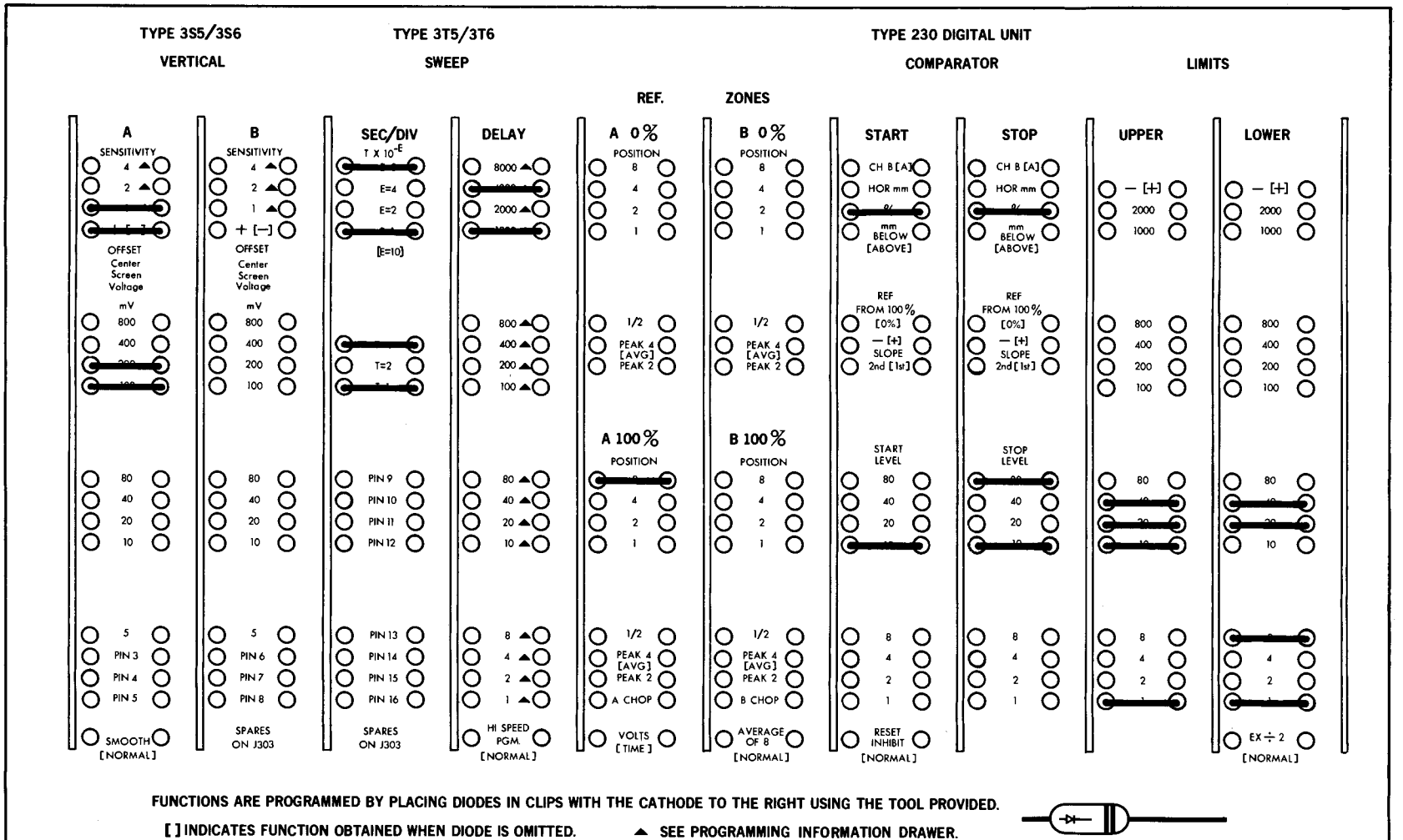

FUNCTIONS ARE PROGRAMMED BY PLACING DIODES IN CLIPS WITH THE CATHODE TO THE RIGHT USING THE TOOL PROVIDED.

[ ] INDICATES FUNCTION OBTAINED WHEN DIODE IS OMITTED. ▲ SEE PROGRAMMING INFORMATION DRAWER.

See back side of Format for additional programming information.

NOTE: Draw heavy lines between circles to indicate diode positions.

TEST NUMBER *4* TEST DESCRIPTION *Risetime Measurement*

PROGRAM NOTES	*Vertical Sensitivity*	*100 mV/div*	*Observed Risetime*	*70 ns*
	Offset	*+300 mV*	*Limits*	*+0071 (Upper)*
	Sweep Rate	*5 ns*		*+0069 (Lower)*
	Delay	*5000 ns*		

Fig. 2-9.

a. Insert the program cards back into the Type 241.

b. Release all pushbuttons and set the Test Mode switch to Single. Set the Type 230 Triggered Measurement switch to Off, the Ref Zones switch to Off, and the Display Time control fully counterclockwise.

c. Select each test individually and observe the shortening of the sweep and the change in dot density on each test.

d. Switch the Test Mode switch to Automatic and set the Type 230 Display Time control to midrange.

e. Observe the sequenced speed-up operation by progressively decreasing the display time and repeatedly pressing the Advance button.

Reset Inhibit and Ex ÷ 2

Two sample programs will be set up to illustrate how a pair of consecutive measurements can be made to determine the exact time of a peak amplitude occurence. A pulse generator such as a Tektronix Type 115 is used to produce a pulse-type signal with its peak occurring at about the 5-cm vertical graticule line on the Type 568 CRT (see Fig. 2-10). The time (minus 1 mm) from the sweep start to the 90% point on the rise of the signal is measured on the first program. The time (minus 1 mm) from the sweep start to the 90% point on the fall of the signal is measured on the second program. By accumulating one-half of the count from the first measurement and one-half of the count from the second measurement, the time position (minus 1 mm) from the start of the sweep to the peak of the pulse may be determined.

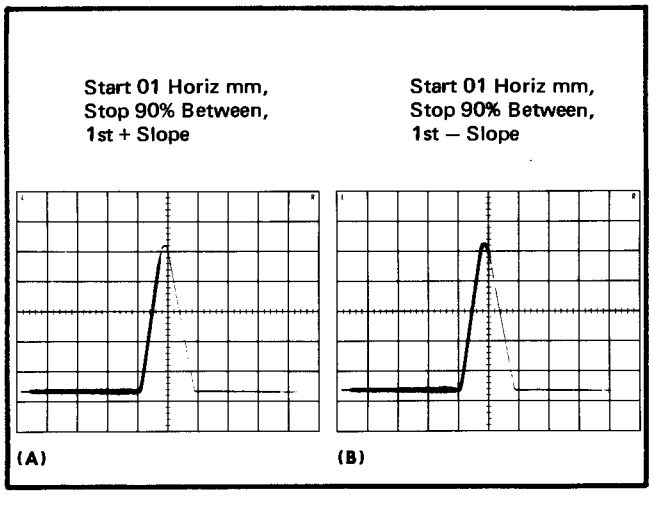

Fig. 2-10. Measurement information included in (A) Sample Program 5 and (B) Sample Program 6.

NOTE

See Type 230 Scaling information near the end of this section for limitations on the use of Ex ÷ 2.

The programming of these two sample programs for duplication by the operator are as follows:

Sample Program No. 5. (See Fig. 2-11.)

1. Type 3S5 VERTICAL (Channel A only). 200 mV sensitivity is selected by not programming any of the sensitivity functions.

Offset of +400 mV is programmed to place the signal in the center of the screen. Depending on the signal used, this value may be subject to change.

2. Type 3T5 SWEEP. The T=1, E=2, and E=4 bits are programmed true to set the SEC/DIV function to 1X 10^{-6} (1 μs).

Programming the DELAY function is not necessary for this setup.

3. Type 230 REF ZONES. Channel A 0% POSITION is not programmed.

Channel A 100% PEAK 4 and PEAK 2 are programmed true to select a 10 cm zone width, allowing the 100% memory to charge to the maximum positive peak of the display from the start position to the end of the sweep.

4. Type 230 COMPARATOR START. HOR mm and START LEVEL 1 are the only functions programmed true. Programming all of the other functions false selects CH A and 1st + SLOPE. The fact that the Type 230 Start Comparator will not fire at the start of the sweep requires programming of the START LEVEL 1 bit. This causes the Start Comparator to start its measurement from the 1 mm point on the sweep.

5. Type 230 COMPARATOR STOP. % and STOP LEVEL 90 (80 and 10) are the only functions programmed true. Programming all of the other functions false selects CH A and 1st + SLOPE.

6. Type 230 LIMITS. The Limits are not programmed for this test with the exception of EX ÷ 2 in the last column. Programming this function [2] divides the count (readout) by two so that accumulation of the two measurements will read out the actual time to the amplitude peak.

Sample Program No. 6 (See Fig. 2-12).

This program is similar to Sample Program No. 5 except for the additional programming of two extra functions as follows:

1. Type 230 COMPARATOR START. Programming RESET INHIBIT true, at the bottom of the START column allows the accumulation of the two measurements.

2. Type 230 COMPARATOR STOP. – SLOPE is programmed true for the stop comparison point. The following procedure details the test:

[2]**Care must be taken that the horizontal plug in unit is not in a "5" sweep rate function or erroneous readout will occur. The selection of a "1" multiplier for this test will result in proper readout.**

TYPE 241 TEST FORMAT

Tektronix Part Number 070-0908-00

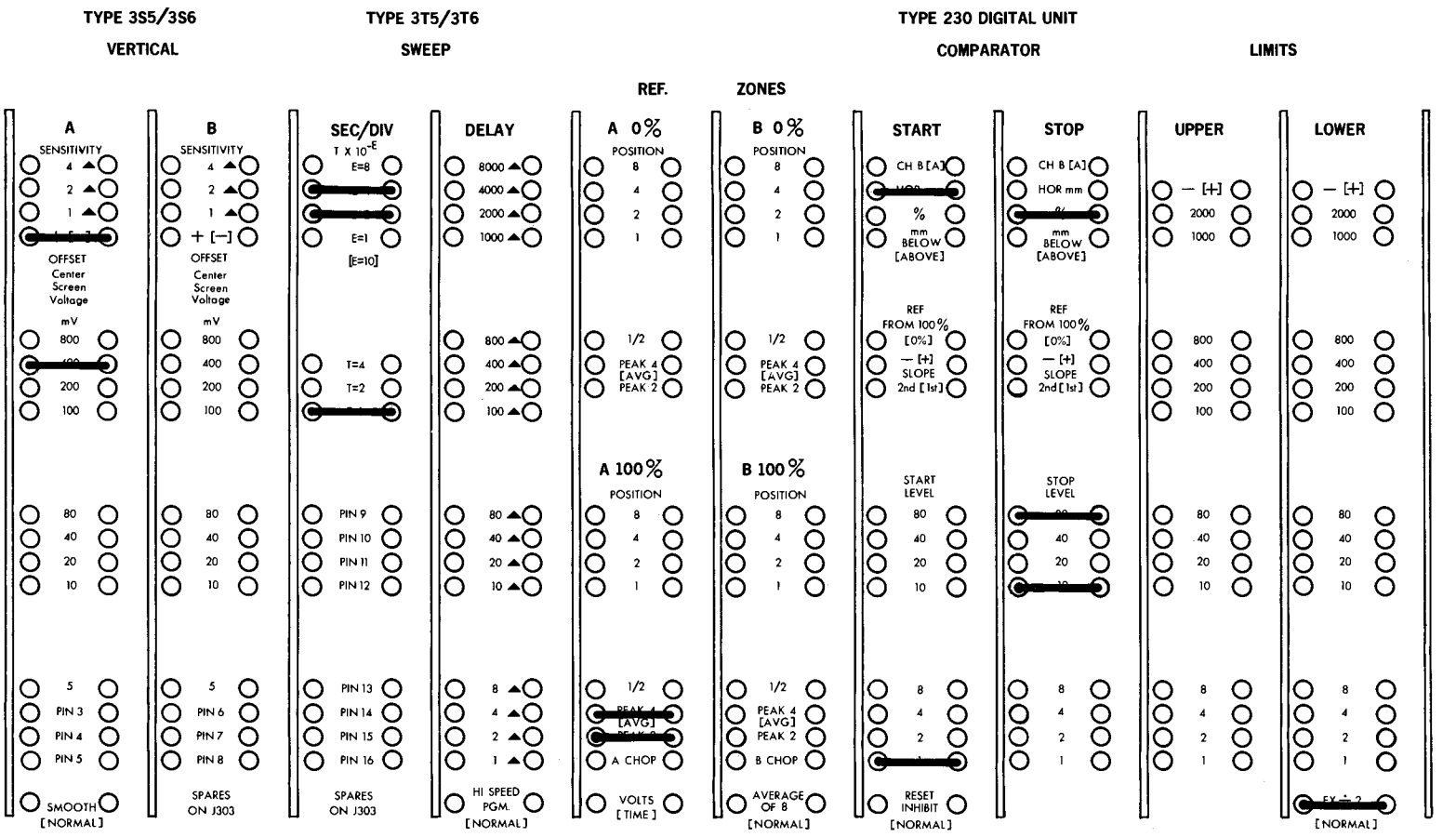

FUNCTIONS ARE PROGRAMMED BY PLACING DIODES IN CLIPS WITH THE CATHODE TO THE RIGHT USING THE TOOL PROVIDED.

[ ] INDICATES FUNCTION OBTAINED WHEN DIODE IS OMITTED. ▲ SEE PROGRAMMING INFORMATION DRAWER.

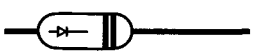

See back side of Format for additional programming information.

NOTE: Draw heavy lines between circles to indicate diode positions.

TEST NUMBER 5 TEST DESCRIPTION *Peak Time Measurement — Part 1*

PROGRAM NOTES *Vertical Sensitivity* *200 mv/cm*

Offset *+400 mV*

Sweep Rate *1 µs*

Delay ———

Fig. 2-11.

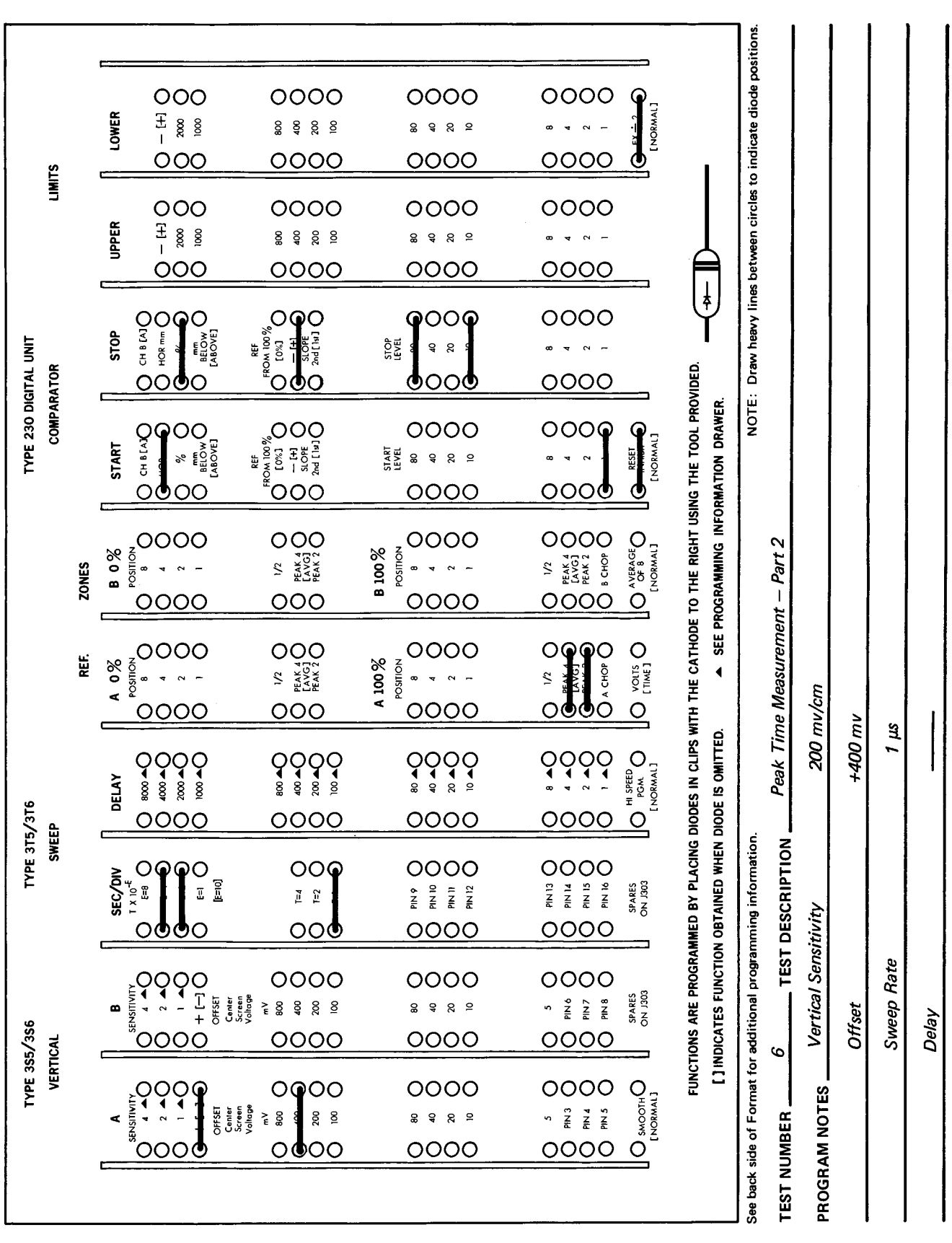
TYPE 241 TEST FORMAT
Tektronix Part Number 070-0908-00
TYPE 355/356
VERTICAL
TYPE 3T5/3T6
SWEEP
TYPE 230 DIGITAL UNIT
COMPARATOR
LIMITS
REF.
ZONES
A
B
SEC/DIV
DELAY
A 0%
B 0%
START
STOP
UPPER
LOWER
SENSITIVITY
POSITION
OFFSET
Center Screen Voltage
SMOOTH [NORMAL]
SPARES ON J303
HI SPEED PGM. [NORMAL]
A CHOP
B CHOP
VOLTS [TIME]
AVERAGE OF 8 [NORMAL]
RESET [NORMAL]
FUNCTIONS ARE PROGRAMMED BY PLACING DIODES IN CLIPS WITH THE CATHODE TO THE RIGHT USING THE TOOL PROVIDED.
[ ] INDICATES FUNCTION OBTAINED WHEN DIODE IS OMITTED.
▲ SEE PROGRAMMING INFORMATION DRAWER.
NOTE: Draw heavy lines between circles to indicate diode positions.
See back side of Format for additional programming information.
TEST NUMBER 6 TEST DESCRIPTION Peak Time Measurement — Part 2
PROGRAM NOTES
Vertical Sensitivity 200 mv/cm
Offset +400 mv
Sweep Rate 1 µs
Delay

Fig. 2-12.

a. Remove all program cards from the Type 241. Insert the two sample program cards (Test Nos. 5 and 6) in the Type 241. Insertion must be in consecutive order and may be made at any intermediate position.

b. Connect the Type 115 Output through a 50-ohm cable, a 50-ohm 2:1 attenuator and a GR to BNC adapter to the Channel A vertical input of the Type 3S5.

c. Connect the Type 115 +Dly'd Trig Out through a 50-ohm cable and a 2:1 attenuator to the External Trigger input of the Type 3T5.

d. The Type 568 and Type 230 front-panel controls are set as in the previous tests. Set the Type 230 Display Time to midrange and the Triggered Measurement switch to On.

e. Set the Type 115 controls as follows:

Period	10 μs
Variable	Cal
Delay	500 ns
Variable	Cal
Width	500 ns
Variable	Cal
Risetime and Falltime	1 μs
Risetime Mult	1
Falltime Mult	1
DC Offset and Amplitude Mult	.5
Mode	Undely'd Pulse
DC Offset (Volts)	Variable
Variable	−1
Amplitude (Volts)	3

f. Set the Type 241 Test Mode switch to Single.

g. Actuate the Test No. 5 pushbutton.

h. Adjust the Type 115 Width Variable control and Delay Variable control to obtain a display similar to that shown in Fig. 2-10. If a signal source other than the Type 115 is used, it may be necessary to modify the Type 3T5 DELAY on the program card to center the pulse on the Type 568 CRT.

i. Set the Type 241 Test Mode switch to Manual Sequence.

j. Release all pushbutton switches.

k. Press the Reset button. (The Ready lamp should be illuminated).

l. Press the Advance button repeatedly until program No. 5 is reached. The Type 230 readout should indicate the time (minus 1 mm) from the sweep start to the 90% point on the rise of the signal, divided by two.

m. Press the Advance button to display program No. 6. The Type 230 readout should indicate the accumulated average result of Test Nos. 5 and 6.

n. Set the Test Mode switch to Automatic Sequence.

o. Press the Reset button.

p. Press the Advance button. Starting with Test No. 1, automatic sequencing occurs with no readout being displayed until Test Nos. 5 and 6 are reached. To maintain a specific tolerance, a stop can be programmed on program card No. 6.

A Chop and B Chop

For measurement systems in which the signal inputs to the vertical plug-in unit include a signal chopper (such as the Tektronix Chopper for P6038-S3), the Type 241 utilizes the chopper drivers in the Type 230. Programming of these enabling functions is done by diode insertion in the A CHOP and/or B CHOP positions on the Type 241 program cards. Fig. 2-13 shows the active circuitry for these operations.

The chopper causes the vertical inputs to switch to ground (or other reference) at the start of the Type 230 GATE pulse, then back to the input signals at the end of the first memory zone.

The following Sample Program illustrates the use of the A CHOP and B CHOP enabling circuits. The Sample Program number 1 card used previously, or one similar to it, can be used for this test with the additional programming of A CHOP.

Additional Equipment Required

1. Type S3 Sampling Head (only one to be used for this test).

2. Chopper for P6038/S3, Tektronix Part Number 015-0128-00.

3. 10X Attenuator for P6038/S3 Chopper, Tektronix Part Number 010-0367-00.

4. Probe Tip To BNC Adapter, Tektronix Part Number 013-0084-00.

Procedure

a. Remove the Type S-1 Sampling Head from the Channel A position.

b. Insert the Type S-3 Sampling Head in the Channel A position.

c. Program the A CHOP function on the Sample Program card number 1.

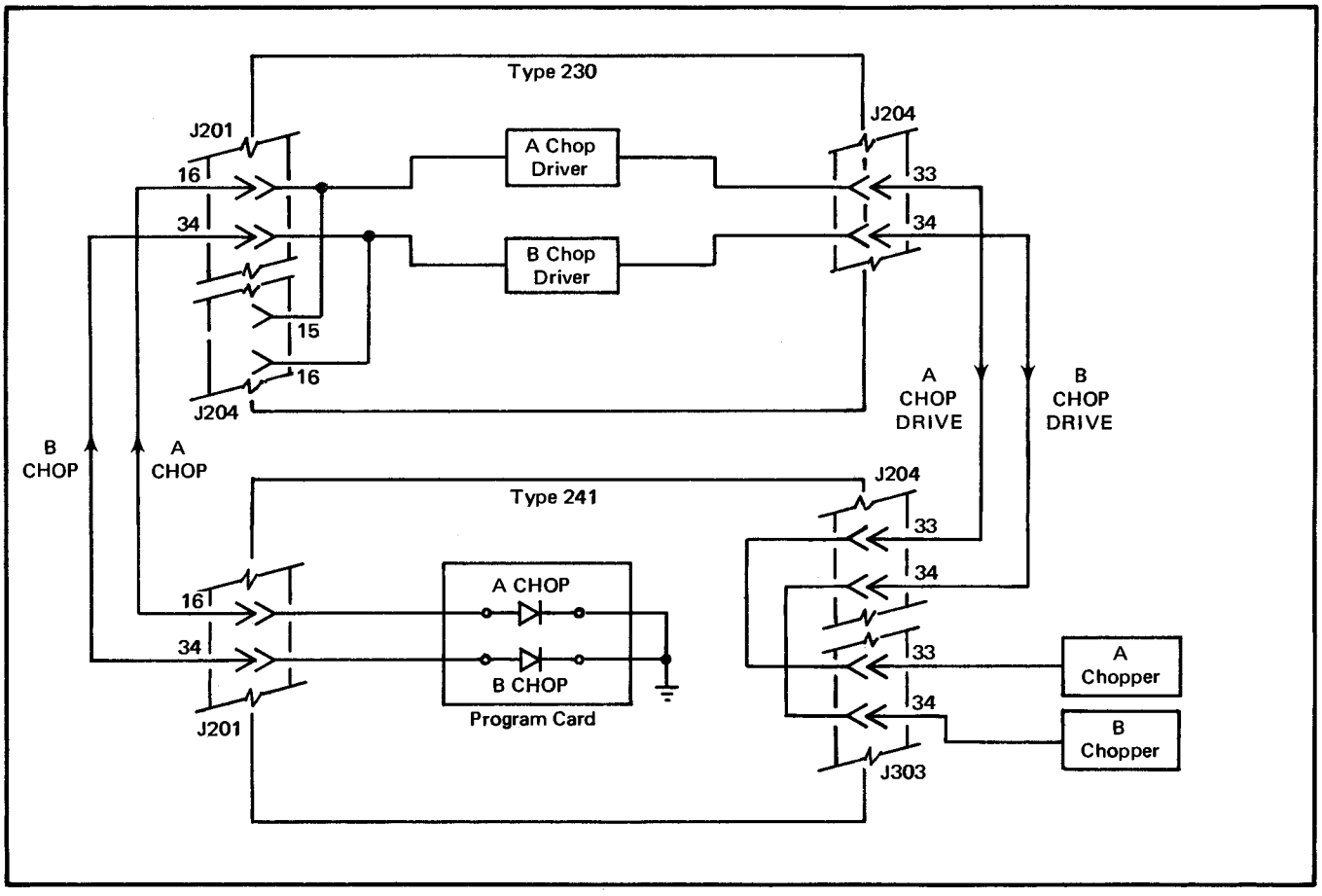

Fig. 2-13. Simplified block diagram showing the enable and input connections for the Type 230 chopper drivers.

d. Insert the card in any position of the Type 241 and activate the corresponding Test pushbutton. Set the Test Mode switch to Single.

e. Connect the Chopper plug in the J303 jack of the Type 241.

f. Insert the Type S-3 probe and the 10X Attenuator in the Chopper A head (see Chopper manual).

g. Connect the BNC to Probe Tip Adapter to the Type 114 Output and insert the 10X Attenuator of the Chopper Head assembly. See Fig. 2-14 for the Chopper Test Setup.

h. Set the front panel controls as used for the initial tests.

i. Press the Advance button. An audible noise should be heard from the Chopper indicating that the Chopper Drive is enabled. Refer to the Chopper instruction manual for proper adjustments.

SPECIAL PROGRAMMING FUNCTIONS

General Information

External equipment other than the Type 230/3S5/3T5 can be controlled by the Type 241 through Remote Control connector J303. In addition, some of the Type 230 functions that are not normally programmed by the Type 241 may be controlled by way of J303. Information concerning these uses of J303 is given following the description of the J303 input/output lines.

J303 (Remote Control)

(See Section 1 for input current requirements and output current available and see Diagram 4 for wiring connections.)

REMOTE ADVANCE (pin 1)

The ADVANCE function of the Type 241 can be performed by a remote switch or device connected to pin 1 to provide a ground closure.

REMOTE RESET (pin 2)

The RESET function of the Type 241 can be performed by a remote switch or device connected to pin 2 to provide a ground closure.

Spares on J303 (pins 3 through 16)

These fourteen lines originating on the program cards can be used to program external devices or optional func-

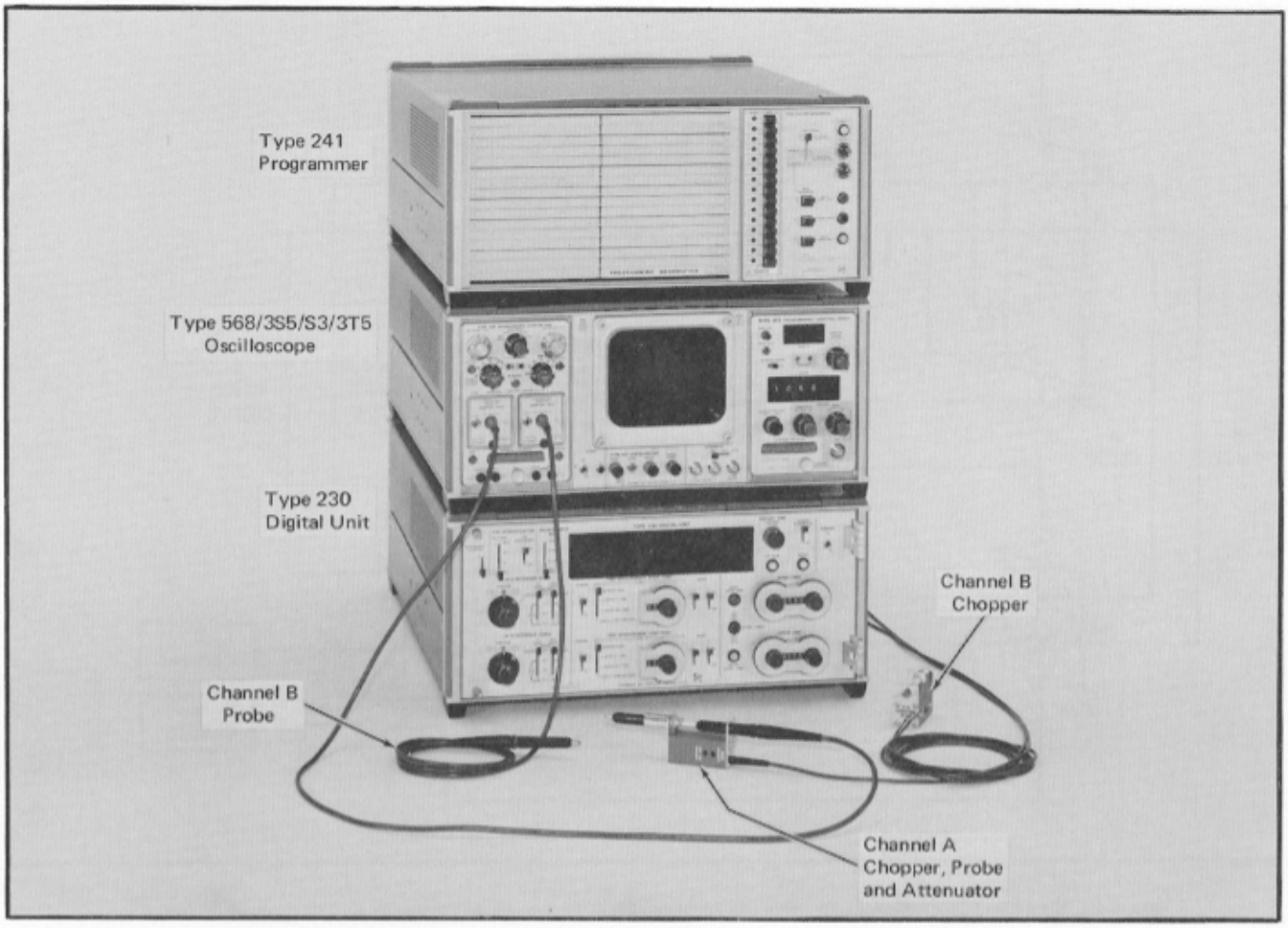

Fig. 2-14. Chopper Test Setup.

tions. Each of these lines is connected to all 15 of the program cards and is programmed true by diode insertion on the specific cards that require the optional function in the program.

ENABLE 1-15 (pins 17-22, 24, 26-32 and 35)

These lines provide a separate "enabling" output for each test. Each line is true only when the corresponding test is active, and false at all other times. If an external printer is used for readout, these lines may be used to indicate the test number related to the printed readout. However, it should be remembered that the Type 230 readout occurs one measurement later than the one in which the reading was made.

These lines may also be used as enabling inputs since each line is connected to the common going to a single program card. Grounding of any one line, using a remote switch or device will select a single test (1 to 15) and light the corresponding Active lamp. Before selecting a test remotely, ensure that the Type 241 is in the ready state (Ready lamp illuminated) and that all Test pushbuttons are inactive. If only external control of the tests is desired, the Test Mode switch should be in the Single position to avoid conflict between internal and external control.

Power Outputs (pins 23 and 25)

A limited amount of power is available at J303 for use by external programming devices (transistors or relays). +12 volts at up to 165 mA and −3.5 volts at up to 175 mA are available at pins 23 and 25, respectively.

A and B CHOP DRIVE (pins 33 and 34)

These lines convey the A CHOP DRIVE and B CHOP DRIVE signals (received from the Type 230 via J204) to the chopper unit at the vertical inputs.

Programming External Equipment

Fourteen spare diode positions, labeled SPARES ON J303, are available on each program card for the purpose of programming external equipment or optional functions. Diode insertion in any of these positions on a program card will cause the corresponding output line on J303 to move

true (grounded through a diode) when that program is activated. Maximum current permitted per diode line is 20 mA when the line is at the true level, and must be further limited such that the total current per program card does not exceed 250 mA. External pull-up must be supplied to provide the false level on the J303 Spare lines. The holding level for the false condition will depend on the equipment to be programmed but should not exceed +12 volts. Power available for this purpose was described earlier under J303 Power Outputs.

Type 230 Scaling

If the J303 Spares on the program cards are not being used to program external equipment, these lines may be used to control the Type 230 readout scaling (decimal point position and units of measure indicators), EXT SCALE and EXT ÷ 5.

Normally, the Type 230 scaling is controlled by the Type 568 plug-in units, but in some cases it may be desirable to control scaling by the Type 241 or external program lines. For example, if attenuators were placed between the vertical input and the signal source external scaling could be used to correct the readout.

Internal Wiring Required. In order to control the Type 230 scaling with the Type 241 program cards or external program lines, it is necessary to add internal wiring in the Type 241 between certain pins on J202, J203, J204, and some of the J303 Spare lines. The lines available for this are given in Table 2-1. The connections to the J303 Spare lines should be made where the lines attach to the J303 connector.

Table 2-1

Lines Available for Type 230 Scaling

Type 230 Program Lines	Type 241 J303 Spares
	J303 pin 3 Spare 1
	J303 pin 4 Spare 2
J202 pin 26 EXT SCALE	J303 pin 5 Spare 3
J203 pin 19 EXT ÷ 5	J303 pin 6 Spare 4
J204 pin 1 DECIMAL 2	J303 pin 7 Spare 5
J204 pin 2 DECIMAL 3	J303 pin 8 Spare 6
J204 pin 3 DECIMAL 4	J303 pin 9 Spare 7
J204 pin 4 NIXIE 'V'	J303 pin 10 Spare 8
J204 pin 5 NIXIE 'S'	J303 pin 11 Spare 9
J204 pin 6 NIXIE 'M'	J303 pin 12 Spare 10
J204 pin 7 NIXIE 'μ'	J303 pin 13 Spare 11
J204 pin 8 NIXIE 'N'	J303 pin 14 Spare 12
	J303 pin 15 Spare 13
	J303 pin 16 Spare 14

NOTE

When the scaling lines are wired internally to the J303 Spare lines, the Type 230 scaling may be controlled by the Type 241 Program Cards, by external program lines through J303, or by a combination of internal and external control.

Programming Required. If scaling is to be programmed by the Type 241 or external program lines, EXT SCALE should also be programmed true to avoid conflict between internal and external programming. If EXT SCALE were left false, the vertical and horizontal plug-in units in the Type 568 would control the scaling of the Type 230 readout, but would not prevent the programming of additional scaling functions by the Type 241 or external program inputs. When EXT SCALE is true, internal scaling by the plug-in units is disabled. External scaling must be provided whenever EXT SCALE is selected. Otherwise the Type 230 readout would indicate the numerical part of the measurement without any decimals or units to indicate the magnitude of the measurement.

EX ÷ 2 (provided on the program cards) and EXT ÷ 5 (requiring special wiring) also affect the scaling of the Type 230. EX ÷ 2 divides the readout by two, so scaling should be used to compensate for the division if needed.[3] EXT ÷ 5 shifts the decimal point one place to the left when true, so programming of the decimal point position should be adjusted to provide the correct decimal readout.

The decimal scaling of the Type 230 has an inhibiting function which prevents two decimal points from appearing at the same time. The units of measure scaling has no inhibiting function, however, and it is possible for all unit indicators to be energized at once. The operator should note this when programming these functions to avoid selecting unit lines that are not desired for the program.

NOTE

Due to the nature of the scaling circuitry in the Type 230, programming of the EX ÷ 2 and EXT ÷ 5 functions are limited as follows, even when EXT SCALE is programmed:

The EX ÷ 2 function cannot be used in a time measurement program when the programmed TIME/Div includes a 5, 50 or 500 multiplier, or in a voltage measurement when the programmed VOLTS/DIV includes a 5 or 50 multiplier.

The EXT ÷ 5 function cannot be used in a time measurement program when the programmed TIME/DIV includes a 2, 20 or 200 multiplier, or in a voltage measurement when the programmed VOLTS/DIV includes a 2, 20 or 200 multiplier.

External Control. After wiring the Type 230 scaling lines as described above, external program lines connected to the Spare pins on J303 can be used to control the readout scaling. To provide a true level on any of the external lines, a relay ground closure or the collector of a saturated

[3] In the First-Time Operation demonstration of RESET INHIBIT and EX ÷ 2, scaling was not required because RESET INHIBIT permited the accumulation of two measurements which are divided by two.

transistor may be used. To ensure that no feedback or "sneak path" occurs, a series diode should be inserted at each program input, outside of the Type 241. The ideal voltage level which constitutes a logical one is ground (0 volts); the most positive level which constitutes a logical one is +2 volts.

To program a false (zero), any program line may be left open or connected to an external positive voltage. If external pull-up is provided, the holding level must be at least +6 volts to constitute a logical zero, but should not exceed +12 volts. Power available for this purpose was described earlier under J303 Power Outputs.

SECTION 3
CIRCUIT DESCRIPTION

Change information, if any, affecting this section will be found at the rear of the manual.

Introduction

This section of the manual describes the circuit operation of the Type 241, first in block diagram terms, then by individual modes of operation.

BLOCK DIAGRAM DESCRIPTION

The Type 241 selects program cards either singly or in sequence to produce ground closures for the externally-programmable equipment, and provides triggers to the Type 230 Digital Unit to perform the selected tests. See the Block Diagram foldout in the Diagrams section. When a card is selected, a program common[1] is delivered to it, and all other cards remain disconnected from program common.

In Single operation, the sequence counter is disabled, which in turn disables all of the decoders except the zero gate. The zero gate provides a program common for the program card selected by the Test pushbutton switch that has been actuated.

In Manual Sequence operation, the sequence counter is advanced one test at a time by the ADVANCE pulse applied through the sequence gate. The Test Mode switch inhibits PRINT COMMAND from sequencing the tests by connecting one input of the sequence gate to ground. The decoder gates then convert the binary outputs of the sequence counter to hexadecimal[2] units from 0 through 15.

Automatic Sequence mode operates in a manner similar to Manual Sequence. When the ADVANCE pulse (applied through the sequence gate) has initiated the first test, subsequent sequencing is performed automatically by the arrival of 230 PRINT COMMAND at the stop gate. After the test sequence has been completed, resetting of the sequence counter is done automatically by the AUTO RESET pulse if one of the Test push buttons is actuated. Type 230 limit information is selected by any combination of the three Stop Sequence switches to stop a sequence. When one of the Stop Sequence switches is actuated and a corresponding Type 230 limit readout occurs, the stop gate becomes inhibited. PRINT COMMAND cannot pass through the inhibited gate, so sequencing of the tests is stopped. To continue the automatic sequencing, the Advance button must again be pressed.

[1] **In the Type 241, a program common is an enable line which, when true, activates the selected program card. Program common provides a true level (ground closure or low level) for the functions programmed by the activated card.**

[2] **Base-sixteen number system.**

TEST MODE CIRCUIT DESCRIPTION

General Information

Three modes of operation can be selected: Single (Select Test), Manual Sequence, and Automatic Sequence. Each of these modes will be explained individually. An overall logic diagram in the Diagrams section shows the relationships between major circuits of the instrument. Simplified diagrams are included with the text to depict the mode under discussion. The circuit diagrams should be referred to for electrical values and for those circuit elements not given on the logic diagrams. The following descriptions make use of negative logic (true is the more negative of the two logic levels; false is the more positive level).

Single (Select Test) Mode

In this mode, any single test of the 15 available can be selected by actuating a Test pushbutton. Switching the front-panel Test Mode switch to Single position turns off Q89 with a low level base voltage (see diagram 1). The collector of Q89 moves positive and resets all four flipflops in the sequence counter. The counter is then held in the reset state during the Single operation, which in turn inhibits all of the decoder outputs except that of the zero gate, Q19 (see diagrams 2 and 5). Transistor Q19 is enabled by the conduction of Q31, which is enabled by the program common circuitry (Q24-Q25) and the off condition of Q30 when the sequence counter is in the Reset state. See Table 3-1, the truth table for the decoder. Enabling Q31 and Q19 provides a current path for the Ready lamp (B19), program common (through the Test Mode switch) for any selected test and its corresponding front-panel Active lamp. See Fig. 3-1 for a simplified diagram showing the current paths when the Test Mode switch is at Single and Test No. 2 is selected.

Manual Sequence (Select Last Test) Mode

When the Test Mode switch is set to Manual Sequence (see Fig. 3-2), one input of sequence gate U24B is grounded, inhibiting passage of PRINT COMMAND from the stop gate.

The sequence counter is reset by pressing the Reset button or by the AUTO RESET pulse at the end of a sequence. This turns off Q89 for the open time of the Reset switch or for the duration of the RESET pulse from the reset single-shot (see description near the end of the Manual Sequence Mode). The false output from Q89 clears the sequence counter and stores a false at each 1 output of the four flipflops. These false levels disable all of the decoder

TABLE 3-1

Truth Table For Decoder

Inputs				Outputs															
8	4	2	1	0	1	2	3	4	5	6	7	8	9	10	11	12	13	14	15
0	0	0	0	1	0	0	0	0	0	0	0	0	0	0	0	0	0	0	0
0	0	0	1	0	1	0	0	0	0	0	0	0	0	0	0	0	0	0	0
0	0	1	0	0	0	1	0	0	0	0	0	0	0	0	0	0	0	0	0
0	0	1	1	0	0	0	1	0	0	0	0	0	0	0	0	0	0	0	0
0	1	0	0	0	0	0	0	1	0	0	0	0	0	0	0	0	0	0	0
0	1	0	1	0	0	0	0	0	1	0	0	0	0	0	0	0	0	0	0
0	1	1	0	0	0	0	0	0	0	1	0	0	0	0	0	0	0	0	0
0	1	1	1	0	0	0	0	0	0	0	1	0	0	0	0	0	0	0	0
1	0	0	0	0	0	0	0	0	0	0	0	1	0	0	0	0	0	0	0
1	0	0	1	0	0	0	0	0	0	0	0	0	1	0	0	0	0	0	0
1	0	1	0	0	0	0	0	0	0	0	0	0	0	1	0	0	0	0	0
1	0	1	1	0	0	0	0	0	0	0	0	0	0	0	1	0	0	0	0
1	1	0	0	0	0	0	0	0	0	0	0	0	0	0	0	1	0	0	0
1	1	0	1	0	0	0	0	0	0	0	0	0	0	0	0	0	1	0	0
1	1	1	0	0	0	0	0	0	0	0	0	0	0	0	0	0	0	1	0
1	1	1	1	0	0	0	0	0	0	0	0	0	0	0	0	0	0	0	1

gates controlling the program commons to the program cards.

When the Advance button is pressed, the negative-going ADVANCE pulse is inverted by Q84 and inverted again by sequence gate U24B. Q84 and U24B perform as a single-shot pulse amplifier utilizing capacitive feedback (C85, see diagram 1) to hold Q84 cut off for a short time. This prevents Advance switch bounce (internal or remote) from initiating unwanted pulses.

The negative-going transition from the output of U24B is coupled to the Cp input of flipflop U90, the first stage of the sequence counter. U90 assumes the set condition with a true at the 1 output, which causes inhibitor Q33-Q34 (see Fig. 3-3) to enable all of the odd-numbered 2^0 gates. Inhibitor Q30-Q31 is disabled by U28A, which disables the even-numbered half of the 2^0 gates, including zero gate Q19. The negative-going transition from U24B (Fig. 3-2) is also differentiated into a negative trigger pulse and passes through inverters Q93 and Q96 to trigger the Type 230 Digital Unit.

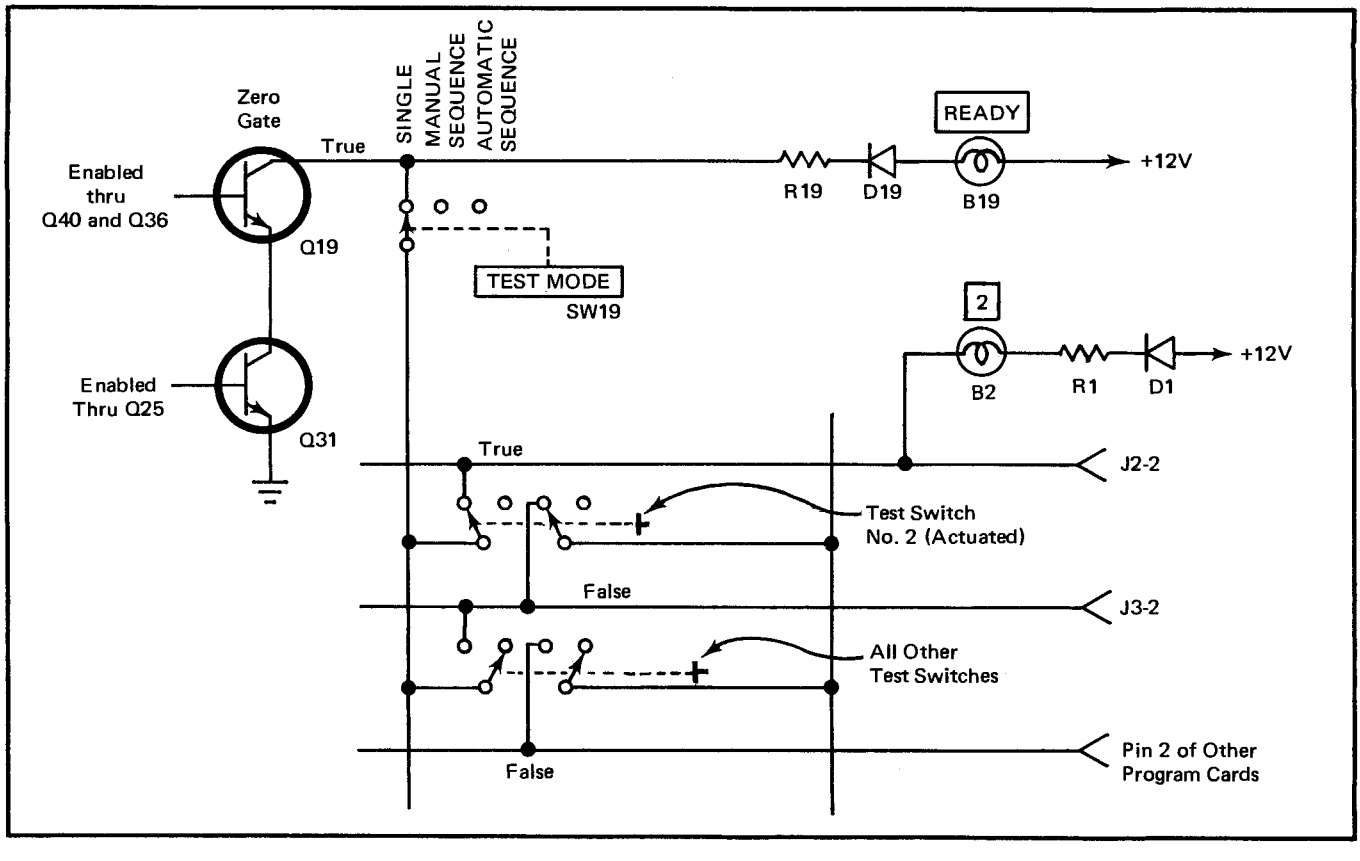

Fig. 3-1. Simplified diagram showing current paths when the Test Mode switch is in Single position and Test No. 2 is selected.

NOTE

Where a gate is described as 2^0, 2^1, or 2^2, the reference is to the binary equivalent of decimal number 1, 2, or 4. The 2^2 gates make the decision as to whether or not an 8 component is present and whether or not a 4 component is present in the binary outputs from the sequence counter; that is, whether 8 or $\overline{8}$ is true and whether 4 or $\overline{4}$ is true. The 2^1 gates make the decision concerning the states of 2 and $\overline{2}$, and the 2^0 gates make the decision concerning the states of 1 (ODD) and $\overline{1}$ (EVEN).

Since the 2, 4 and 8 lines from the sequence counter are false (Fig. 3-3), Q50 is the only one of the 2^2 gates (Q50 through Q53) that is enabled. The true from Q50 enables Q40 and Q45 of the 2^1 gates (Q40 through Q48), but only Q40 conducts since Q45 is inhibited by Q38. The false output from Q40, in conjunction with the true from Q34, forward-biases Q1 of the 2^0 gates. The conduction of Q1 furnishes a program common for the first program circuit card and current for the No. 1 Active lamp on the front panel.

When the Advance button is pressed for the second time, the negative-going transition from U24B (Fig. 3-2) resets U90 and its 1 output moves false. The negative-going transition from the 0 output of U90 to the Cp input of U91 places U91, the second flipflop in the sequence counter, in the set condition. U91 stores a true at its 1 output, delivering a binary 2 to the decoder. The false from the 1 output of U90 (the 1 line) disables inhibitor Q33-Q34 and enables inhibitor Q30-Q31 (see Fig. 3-4). The output of Q33-Q34 moves false, disabling all of the odd-numbered 2^0 gates, and the output of Q30-Q31 moves true, enabling all of the even-numbered 2^0 gates. Since $\overline{8}$ is true and 4 is false, Q50 is still the only 2^0 gate that is enabled.

The true from Q50 plus the false state of $\overline{2}$ from Q38 forward-biases inhibitor Q45. The false output of Q45 enables the bases of Q2 and Q3, but Q3 cannot conduct because of the false state of the Q33-Q34 output. The true state of EVEN from Q31 permits Q2 to conduct, furnishing a program common for the second test and illuminating the second Active lamp.

When the Advance button is pressed for the third time, the negative-going transition from U24B again sets U90, which causes inhibitor Q33-Q34 to enable all of the 2^0 gates controlled by ODD (see diagram 5). Inhibitor Q30-Q31 is disabled and EVEN is false, which disables the other half of the 2^0 gates. Since U91 has not changed state since the last test, a true is still stored at its 1 output (the 2

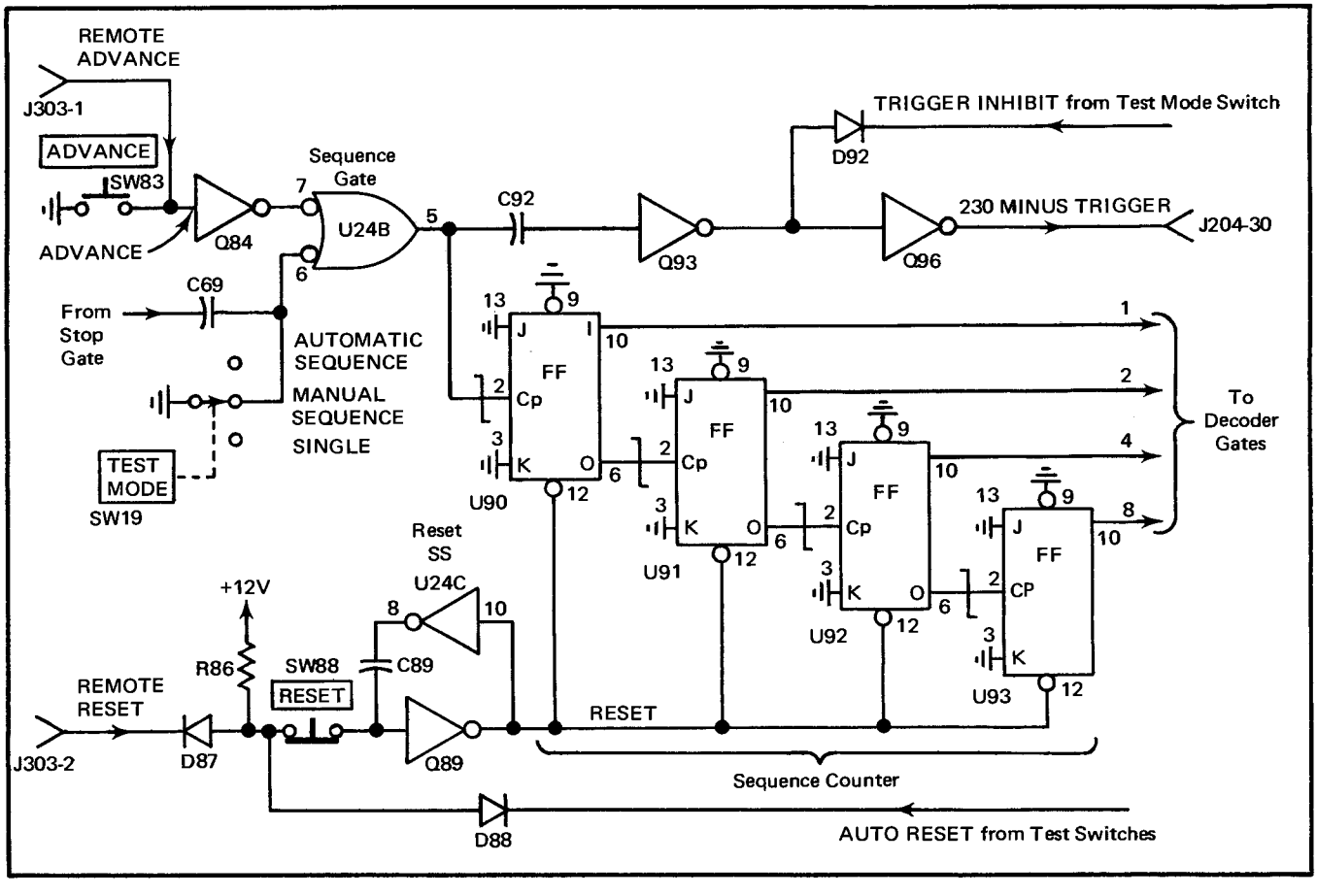

Fig. 3-2. Partial diagram showing active input gates and sequence counter when Test Mode switch is in Manual position.

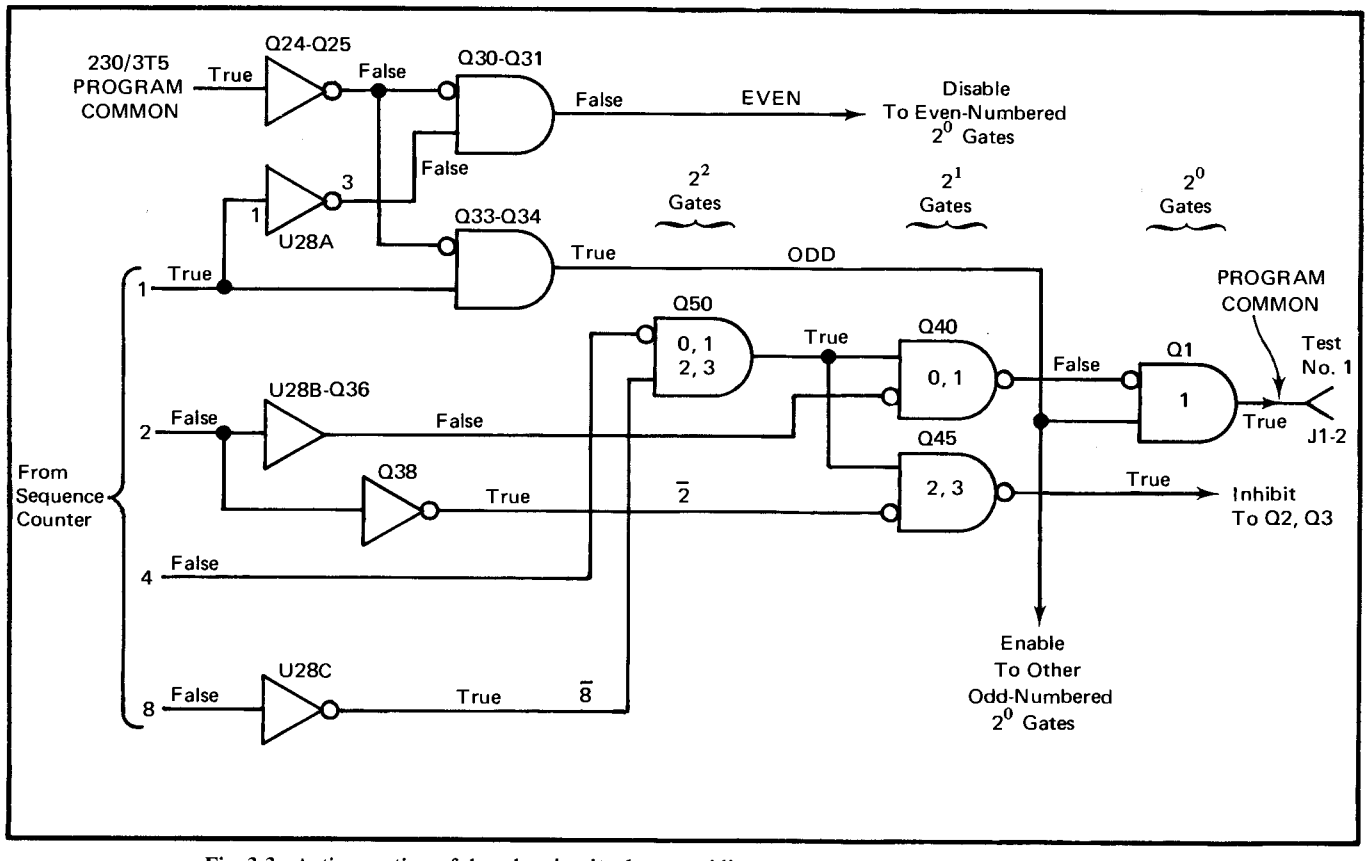

Fig. 3-3. Active portion of decoder circuit when providing a program common to Program Card No. 1.

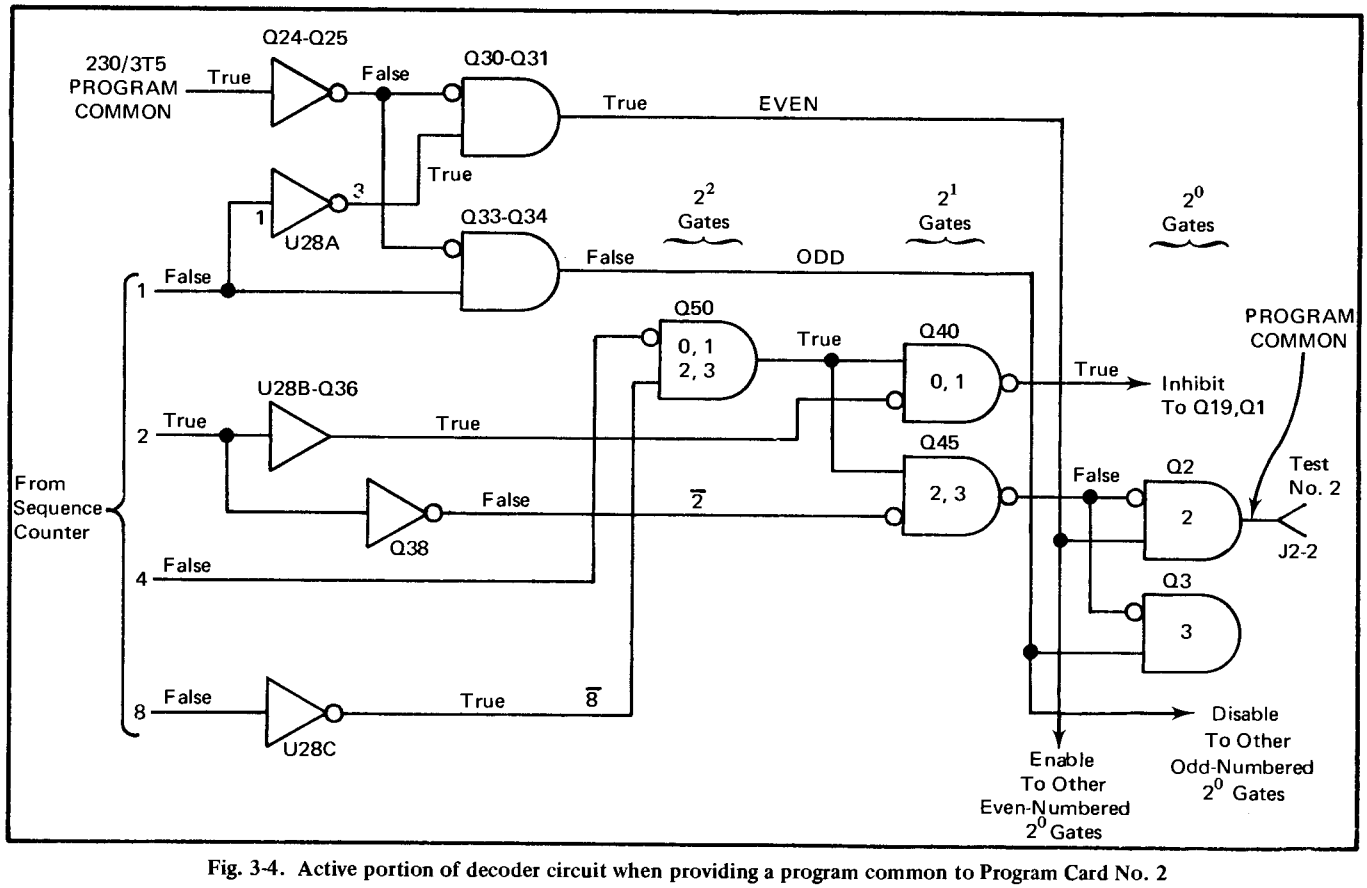

Fig. 3-4. Active portion of decoder circuit when providing a program common to Program Card No. 2

line), which enables Q45. The true output of Q45 is recognized by the input of Q3 instead of Q2, since the odd-numbered 2^0 gates are now enabled. The true state of ODD permits Q3 to conduct, the third test is furnished a program common and the third Active lamp illuminates.

When the Advance button is pressed for the fourth time, U90 resets and its 1 output (the 1 line) goes false, which causes inhibitor Q33-Q34 to disable all of the 2^0 gates receiving ODD. Inhibitor Q30-Q31 is enabled, so EVEN is true. When U90 resets for the second time it resets U91, whose 0 output sets U92, the third binary element of the sequence counter. Since the 1, 2 and 8 lines from the sequence counter are false and 4 is true, the decoder operates in a manner similar to that described previously, causing Q4 to conduct, furnishing a program common to the fourth test and illuminating the No. 4 Active lamp.

Thus, each time the Advance button is pressed, a program common is delivered to the next program until all 15 tests have been selected or the last selected test has been completed.

When the sixteenth ADVANCE pulse is initiated, the pulse from U24B ripples through all four sequence counter flipflops and resets them. Q19 is turned on by the reset state of the sequence counter, illuminating the Ready lamp. The sequence counter then remains reset until the next ADVANCE pulse starts the sequencing over again.

If less than 15 tests are to be performed, the Test pushbutton of the last desired test is actuated and the instrument returns to the Ready state after completion of that test. For example, if only four tests are needed for a test routine, the No. 4 Test pushbutton is actuated (see Fig. 3-5). When test No. 4 is reached, the output of Q4 moves true and the TRIGGER INHIBIT returned through D92 to the input of Q96 clamps the input of Q96 at approximately 0.5 volt. This clamping action is slow enough to allow the 230 MINUS TRIGGER pulse to be generated, initiating the program No. 4 measurement. When the next ADVANCE pulse arrives, it clocks the sequence counter to enable test No. 5, but no trigger is sent to the Type 230, since the input of Q96 is clamped by TRIGGER INHIBIT. The output of Q5 moves true and is coupled as AUTO RESET through Test switch No. 4 and D88 to the input of Q89 (see Figs. 3-5 and 3-2), turning off Q89. When resetting is done with the AUTO RESET pulse, Q89 and U24C operate as a single-shot pulse amplifier, utilizing capacitive feedback (C89, diagram 1) to stretch the pulse out. All four binary elements of the sequence counter are automatically reset by the RESET pulse and the instrument returns to the Ready state, rather than initiating program No. 5.

Automatic Sequence (Select Last Test) Mode

In this mode, pressing the Advance button causes the Type 241 to sequence automatically from the Ready state through any number of tests up to 15. At the end of the 15th test, the sequence counter resets and places the Type 241 in the Ready state. If any Test pushbutton other than No. 15 is actuated, the sequence stops at that point and the instrument returns to the Ready state.

The Type 230 should be in Triggered Measurement mode for Automatic Sequence operation, to utilize the capabilities of the Type 241 Stop Sequence pushbuttons. When a stop occurs, the Type 241 is held in the stop condition to allow the operator to examine the results of the test and determine why the stop has occurred. Sequencing can then be resumed by pressing the Advance button.

When the Test Mode switch is set to Automatic Sequence position and all three of the Stop Sequence switches

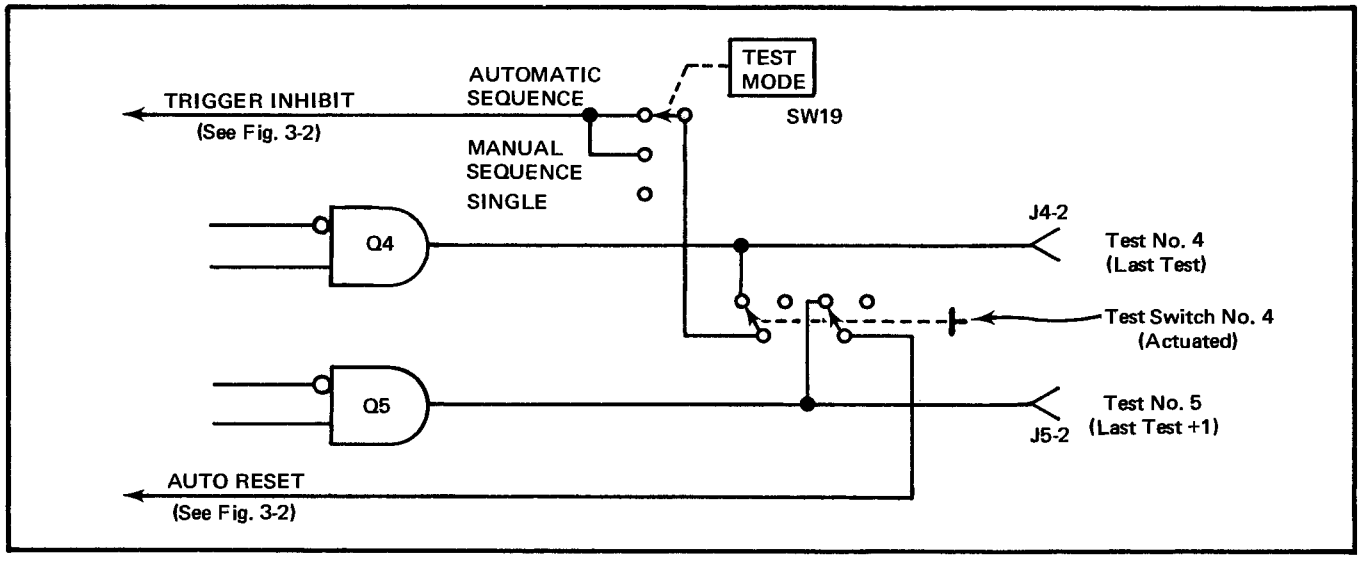

Fig. 3-5. Simplified diagram showing the TRIGGER INHIBIT and AUTO RESET pulse paths in Manual Sequence or Automatic Sequence mode when Test No. 4 is the selected last test.

are inactive, the three "stop" inputs of stop gate U24A-U62D are true (see diagrams 1 and 5). When the Advance button is pressed, Q84 is momentarily cut off and a positive-going pulse is sent to pin 7 of U24B. The output of U24B moves true momentarily and begins the same series of events described in the Manual Sequence mode. At the end of the first measurement, 230 PRINT COMMAND moves false for about 200 microseconds, then moves true. The negative-going transition of 230 PRINT COMMAND applied through D75 and C78 to pin 13 of U62D causes the output of the stop gate to move false momentarily. The positive-going change from U24A-U62D is coupled through C69 and inverted by sequence gate U24B to advance the sequence counter and to trigger the Type 230. The 8-4-2-1 output lines from the sequence counter now present a 0010 to the decoder, which enables test No. 2.

Thus at the end of each Type 230 measurement, 230 PRINT COMMAND automatically advances the Type 241 to the next test. When the sequence counter resets at the end of the 15th test (or the selected last test), the pin 13 input of U62D in the stop gate is clamped by the true state of READY from Q19 (through D76), placing the Type 241 in the Ready state.

Stop Sequence Switches

The Type 241 limit lamps operate in conjunction with the Type 230 limit lamps to indicate the test result (Above Upper Limit, Within Limits, or Below Lower Limit). When one (or more) of the Stop Sequence switches is actuated and a true (representing a limit condition) is delivered to the corresponding inverter (U62A, U62B, or U62C), a false is applied to one of the "stop" inputs of the stop gate. This false level inhibits the stop gate, making it insensitive to further 230 PRINT COMMAND pulses, and the sequence stops. This also stops the generation of 230 MINUS TRIGGER pulses from the Type 241, therefore no more measurements will be made with the Type 230 in Triggered Measurement mode. The Type 241 must then be advanced to the next program to remove the limit condition which stopped the sequence. This is done by pressing the Type 241 Advance button, which also triggers the Type 230 to make the next measurement. The Type 241 then resumes sequencing programs until the instrument returns to the Ready state or until another stop is encountered.

If it is desired to terminate a sequence before completion, the Type 241 can be returned to the Ready state at any time by pressing the Reset button.

GLOSSARY OF DIGITAL TERMS

The following definitions have been developed by a group connected with the design and documentation of Tektronix digital instruments. Words printed in bold type are those which are defined within the list.

activated—The state of logic **gate** when it is performing its indicated **logic function.**

AND—A **logic function** which requires all inputs to be true for the output to be true. (See Fig. 3-6.)

AND gate—A circuit which performs an **AND** function.

BCD (binary coded decimal)—Pertaining to a code in which each decimal digit is represented by a four-bit binary group. The maximum number that can be represented by any BCD digit is 9. Example: In the 8-4-2-1 coded decimal notation, the number twenty-three is represented as 0010 0011. In pure binary notation, twenty-three is represented by 10111.

bit—A binary digit.

clear—1. To store a **zero** in a flipflop regardless of other input conditions. 2. To **reset.**

clock—1. A signal source which establishes the time intervals at which **logic functions** occur. 2. To establish the time intervals at which **logic functions** occur.

complement—1. The amount needed to fill or complete. The complement of a number is another number which completes the original number with respect to a known reference number. Example: In a binary system (Radix = 2), the reference number may be the radix or radix minus one. In a one-digit system, the commonly used radix-minus-one complement is the opposite of the given number. 2. The act of forming a complement.

counter—A device for storing a number and allowing the number to be increased or decreased.

decoder (encoder)—A device which converts from one number system to another. Two commonly used types are the binary-to-decimal and decimal-to-binary converters.

don't care—1. An input combination whose influence on the **logic circuit** results in an output of no consequence. 2. The case in logic in which certain input combinations cannot or will not occur, or the output will not be used. These cases may be ignored. Example: Ordinarily a four-bit binary **counter** will produce any of sixteen combinations. If the four-bit binary **counter** is converted to a decade counter, binary combinations ten through fifteen will not appear at the output, hence may be ignored and are called don't cares.

enable—Pertaining to a **gate** input which determines whether other inputs may control the gate's output conditions.

encoder—See decoder.

false—The non-**activated** state of a **logic circuit** input or output.

flipflop—A bistable device (capable of assuming one of two stable states), which may assume a given state depending on

the history of one or more inputs and having one or more outputs (see Fig. 3-6). In a **clocked** flipflop, the outputs respond to the inputs only when **clocked.**

gate (logic gate)—A **logic circuit** which operates on one or more input variables, and which delivers an output having a prescribed functional relation to the input(s).

high—A voltage level, usually designated as the more positive of two **logic levels**.

inhibit—Pertaining to a **gate** input which overrides control of the output by the other inputs. Control by the other inputs is possible only when the inhibit input is **false.**

logic circuit—A circuit which performs a **logic function**.

logic function—A cause-effect relationship which can be represented by a **truth table**.

logic levels—Voltage or current levels which are assigned logical meanings; i.e., they can activate or deactivate the logic devices within the system.

low—A voltage level, usually designated as the less positive of two **logic levels**.

NAND—A **logic function** which is an **AND** function with an inverted output. (See Fig. 3-6.)

negative logic—A system of **logic level** identification where the less positive level is identified as a logical **one** and the more positive level as a logical **zero**.

one (1)—A symbol for the **true (activated)** state. 2. Another title for the Q output terminal of a **flipflop**. This output presents a **true** state when the **flipflop** is **set**.

OR (inclusive)—A **logic function** which requires one or more inputs to be **true** for its output to be **true**. (See Fig. 3-6.)

parallel—Pertaining to simultaneous transmission of, **storage** of, or logical operations of elements of data using separate facilities for the various elements. (See **serial**.)

phantom AND—An **AND** function obtained by the connection of two or more **logic circuit** outputs (also called wired **AND**, and Dot **AND**).

phantom OR—An **OR** function obtained by the connection of two or more **logic circuit** outputs.

preset—To store a **one** in a **flipflop** regardless of other input conditions.

program—1. A set of conditions for solving a problem. The set may contain subsets called **routines**. 2. To arrange or devise conditions for solving a problem.

programmer—1. A person who creates a **program**. 2. A machine which controls another machine.

register—One or more binary series elements arranged to **store** data.

reset—1. To return a device to **zero** or to an initial or arbitrarily selected set of conditions. 2. To restore a **storage** device to a preselected initial state not necessarily that denoting **zero.**

routine—A set of instructions, contained within a **program**, that perform a well-defined operation.

serial—Pertaining to sequential transmission of, **storage** of, or logical operations on elements of data using the same facilities for the various elements. (See **parallel.**)

set—1. To place a **storage** device in a prescribed state. 2. To place a **flipflop** in the **one** state.

storage—A device or location capable of retaining data for later use.

store—To place in **storage**.

test—In a programmable measurement system, a **word** that contains the information necessary to command the system to make a specific measurement.

toggle—To cause a **flipflop** to **complement** its output state.

true—The **activated** state of a **logic circuit** input or output.

truth table—A table listing all the input possibilities of a **logic function** along with the output condition resulting from each set of possible input conditions. The truth table usually uses **ones** and **zeros** to represent the two conditions. (See Fig. 3-6.)

word—A number of **bits** or characters handled as a unit by a digital device.

zero (0)—1. A symbol for the **false** (non-activated) state. 2. Another title for the Q output terminal of a **flipflop**. This output presents a **false** state when the **flipflop** is **set**.

LOGIC SYMBOLOGY

The logic symbols used in this manual are negative-logic symbols and are described by means of truth tables in Fig. 3-6. Specific uses of integrated circuits in the Type 241 are described in Fig. 3-7.

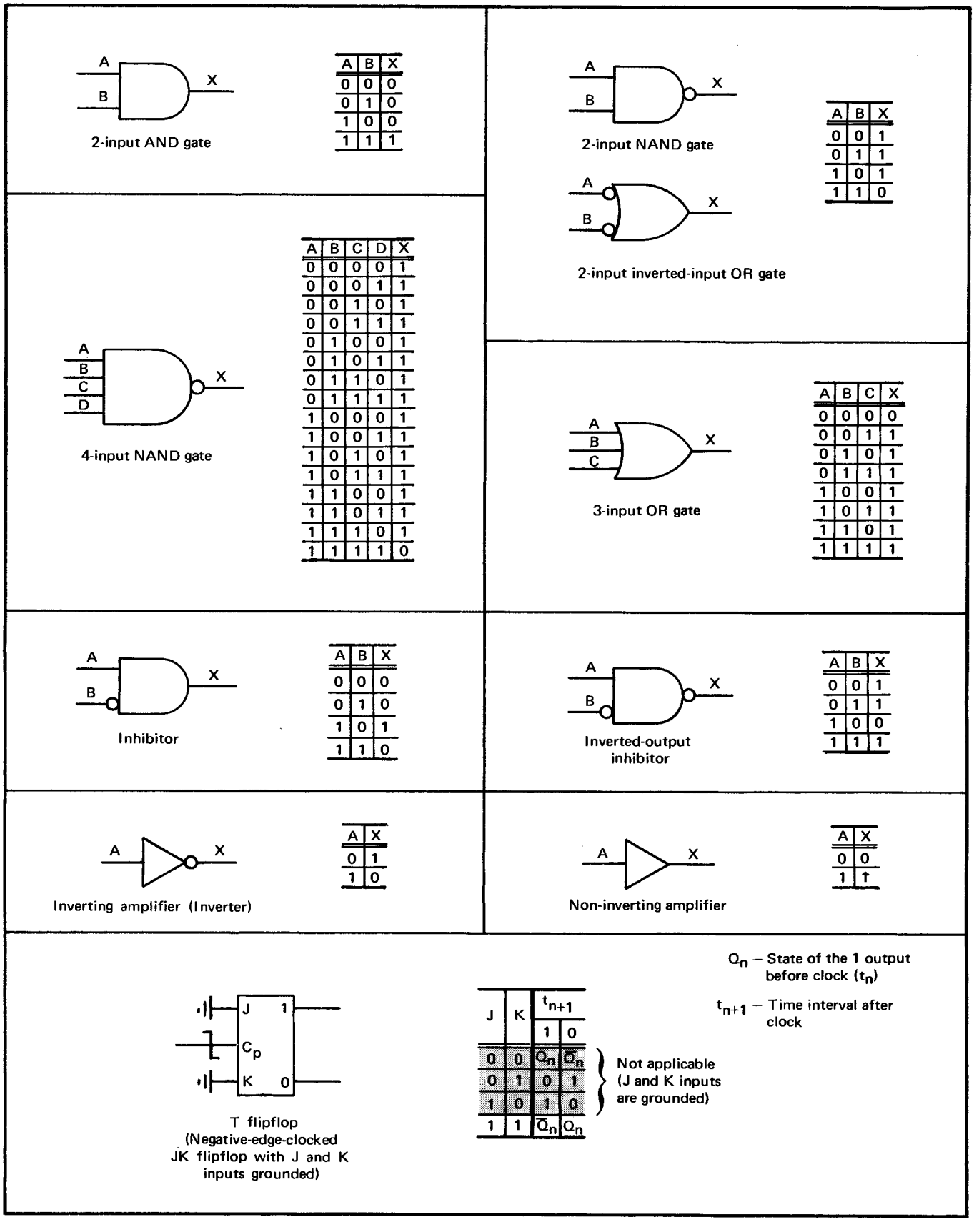

Fig. 3-6. Truth tables for the logic symbols used in this manual.

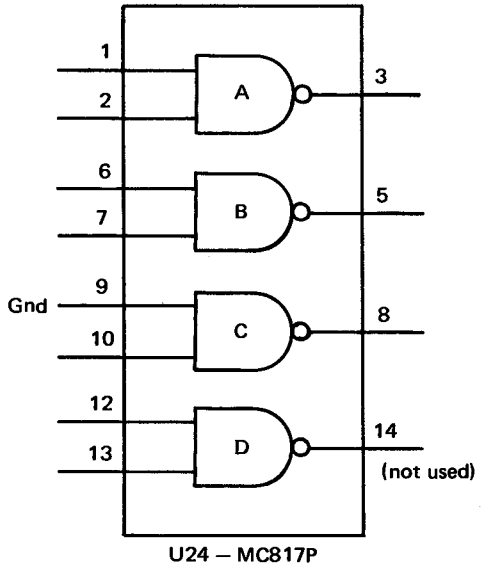

U24 — MC817P

U24A is used as a 2-input NAND gate, U24B as a 2-input inverted-input OR gate, and U24C as an inverter with pin 9 grounded. U24D is not used.

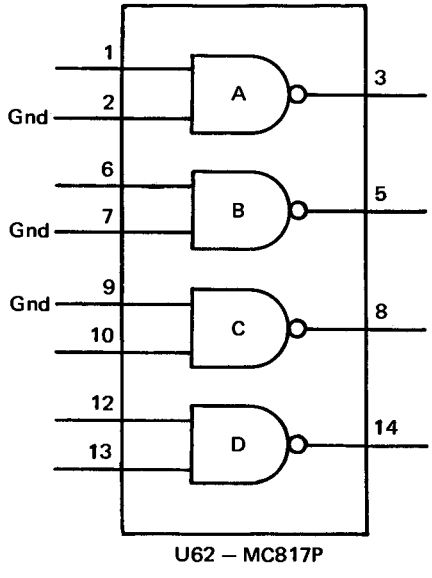

U62 — MC817P

U62A, U62B and U62C are used as inverters with pins 2, 7 and 9, respectively, grounded. U62D is used as a 2-input NAND gate.

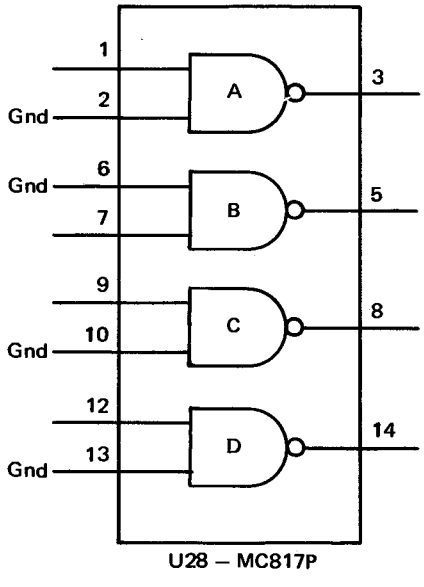

U28 — MC817P

U28A, U28B, U28C and U28D are used as inverters with pins 2, 6, 10 and 13, respectively, grounded.

Fig. 3-7. Specific uses of MC817P NAND gates used in the Type 241.

NOTES

SECTION 4
MAINTENANCE

Change information, if any, affecting this section will be found at the rear of the manual.

Introduction

This section of the manual provides information on preventive maintenance, troubleshooting procedures, and corrective maintenance. Preventive maintenance performed on a regular basis helps prevent instrument failure and improves the mechanical and electrical reliability of the instrument. If trouble occurs in the instrument, corrective maintenance should be performed immediately to eliminate additional damage and to restore the instrument to its proper operation.

PREVENTIVE MAINTENANCE

Preventive maintenance consists of cleaning, lubrication, visual inspection and recalibration. The Type 241 should be checked every 1000 hours of operation or every six months, whichever occurs first. If the instrument is subjected to adverse environmental conditions such as excessive dust, high temperature or high humidity the frequency of the checks should be increased.

Access To Interior

The top and bottom dust covers of the Type 241 can be easily removed for access to the internal circuitry. The covers are secured to the frame with slotted-head fasteners that can be released by turning each fastener 1/4 turn counterclockwise. The covers should be reinstalled on the instrument for normal operation to keep out dust and to provide proper distribution of the air flow.

Cleaning

Clean the instrument often enough to prevent accumulation of dirt. Dirt on the components acts as a thermal insulating blanket preventing heat dissipation, and may provide electrical conducting paths.

Exterior. The outside of the instrument can be cleaned by wiping with a soft cloth. A small paint brush is useful in removing dust from the front-panel controls. Hardened dirt or grease may be removed with a soft cloth dampened in a water and mild detergent solution. Abrasive cleaners should not be used.

Interior. Clean the interior of the instrument by loosening the accumulated dust with a dry, soft paint brush. Remove the loosened dust with a vacuum or by blowing it out with a low-velocity stream of air. Any remaining dirt may be removed with a small cloth or cotton-tipped applicator dampened with a solution of water and mild detergent. The plug-in circuit cards should be removed for individual cleaning. After cleaning the interior, allow the instrument to dry thoroughly before turning it on.

Lubrication of Switches. The life of selector switches and other moving parts can be lengthened by keeping them properly lubricated. Use a cleaning type lubricant (such as Cramoline Special) on interconnecting plug contacts and switch contacts. Use a heavier grease (Beacon grease No. 325 or equivalent) on switch detents. Do not over-lubricate. The necessary materials and instructions for proper lubrication of Tektronix instruments are contained in a component lubrication kit available from Tektronix. Order Tektronix Part No. 003-0342-00.

Visual Inspection

After cleaning, the instrument should be carefully checked for such defects as poor connections damaged parts, and improperly seated transistors and integrated circuits. The remedy for most visible defects is obvious; however, if heat-damaged parts are discovered determine the cause of overheating before the damaged parts are replaced. Otherwise the damage may be repeated.

Performance Check

To insure correct and accurate measurements, the instrument should be checked after each 1000 hours of operation, or at least every 6 months. A Performance Check procedure is given in section 5.

CORRECTIVE MAINTENANCE

General

Corrective maintenance consists of component replacement and instrument repair. Special techniques or procedures required to replace components in this instrument are described here.

Obtaining Replacement Parts

Standard Parts. All electrical and mechanical part replacements for the Type 241 can be obtained through your local Tektronix Field Office or representative However, many of the standard electronic components can be obtained locally in less time than is required to order them from Tektronix, Inc. Before purchasing or ordering replacement electrical parts, consult the Electrical Parts List for value, tolerance and rating.

NOTE

When selecting replacement parts it is important to remember that the physical size and shape of a component may affect its performance at high frequencies. Any replacement part should be a direct replacement unless it is known that a different component will not adversely affect instrument performance.

Special Parts. In addition to the standard electronic components, some special parts are used in the Type 241. These parts are manufactured by Tektronix, Inc. to meet specific performance requirements, or are manufactured for Tektronix, Inc. in accordance with our specifications. Special electrical parts are indicated in the Electrical Parts List by an asterisk preceding the part number. Most of the mechanical parts used in this instrument have been manufactured by Tektronix, Inc. Order all special parts directly from your Tektronix Field Office or representative.

Ordering Parts. When ordering replacement parts from Tektronix, include the following information:

1. Instrument Type.

2. A description of the part (if electrical, include circuit number).

3. Tektronix Part Number.

4. Instrument Serial Number.

Soldering Techniques

CAUTION

Disconnect the instrument from the power source before soldering.

Circuit Board Soldering. (Also see paragraphs on accessibility of the component parts). Use ordinary 60/40 tin-lead solder with a 35- to 40-watt pencil type soldering iron. A higher wattage soldering iron may separate the etched wiring from the base material. The tip of the iron should be clean and properly tinned for quick heat transfer to the solder connection.

The following technique is suggested for replacing a component on a circuit board:

1. Grip one lead of the component with a pair of needle-nose pliers. If the component is known to be defective, the leads may be cut near the component body for individual removal.

2. Touch the tip of the soldering iron to the connection at the back of the board, then gently pull the lead out of the board and remove the soldering iron.

3. A clean hole should be left in the board when the lead is removed. If not, clean out the hole by reheating the connection and inserting a sharp non-metallic object such as a toothpick into the hole.

4. Remove each of the other leads and clean the holes in the same manner.

5. Clean the leads of the new component and bend them to fit the holes in the circuit card.

6. Insert the leads into the holes, making certain that the component seats on the card in the same manner as the original. If it does not, reheat the connection and press the component into place.

7. Apply the soldering iron and a small amount of solder to the connection at the back of the card. Use only the amount of solder required to form a good electrical connection.

8. Check the front (compnent side) of the card to insure that the solder has wicked through the hole and onto the lead. On some cards it may be necessary to solder the lead on the component side of the card. If this is required, use a procedure similar to that described in step 7.

Metal Terminal Soldering. Use ordinary 60/40 tin-lead solder for soldering to metal terminals such as switch or connector terminals. A soldering iron with a 40- to 75-watt rating should be used and the tip of the iron should be properly cleaned and tinned.

To remove or solder a lead to a metal terminal use the following techniques:

1. Hold the lead with a pair of long nose pliers. If the lead is insulated, be careful not to damage the insulation.

2. Apply the soldering tip directly to the connection until the solder begins to melt, and remove the lead quickly. Do not apply excessive heat.

3. Pre-tin all leads to be soldered to a connector terminal. Pre-tin by heating the lead and coating it with a small amount of solder.

4. Use the minimum amount of solder required to form a good electrical connection, and keep the lead from moving while the solder is cooling to avoid formation of a cold solder joint.

Other Soldering Considerations. When soldering to a switch terminal, do not let the solder flow beyond or around the rivet holding the terminal on the switch wafer. The spring tension of the switch terminal may be destroyed and the contacts will not make a good electrical connection.

When soldering a short-lead component, heat shunt the lead with a pair of long nose pliers (Fig. 4-1) between the soldering iron tip and the component.

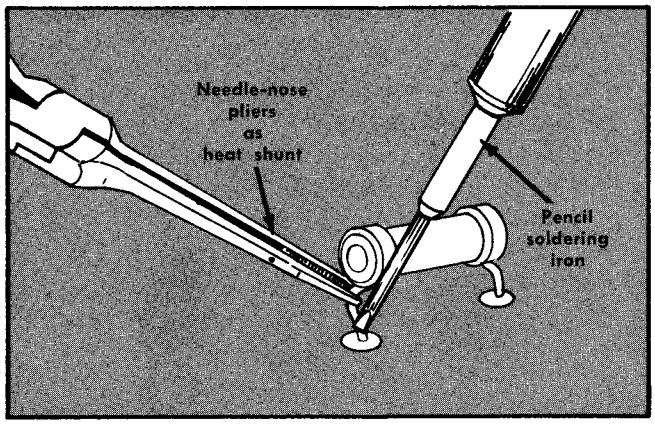

Fig. 4-1. Use of heat shunt to protect components while soldering.

After soldering any connection, cut off the excess length of the soldered lead. Be sure that these loose ends are not dropped into the instrument where they could cause electrical shorting.

Accessibility of Control Board and Lamp Driver Board

All of the active circuitry of the Type 241 is mounted on one chassis, removable for easy access to all of the components.

If any of these components needs replacing, use the following procedure for removal and installation:

1. Remove the four screws holding the chassis in place. Two of the screws are on the top of the instrument and two are on the bottom.

2. Slide the chassis out of the Type 241 from the front side so that it is suspended by the cable. It may be necessary to remove the cable clamp. Minor repairs may be made while the chassis is in this position.

3. If more extensive repairs are required, it may be advisable to send the chassis back to the factory or to contact your local Tektronix Field Office or representative for proper procedures. If complete removal of the chassis is required, disconnect all wires from the pin connectors. The illustrations at the rear of this section should be referred to when reconnecting the wires.

Parts Replacement

Switch Replacement. Individual parts of either a lever or pushbutton switch are not normally replaceable. If one section of a switch is defective, the entire unit should be replaced. Refer to the Electrical Parts List for the appropriate part number. When replacing a switch, tag the leads and switch contacts with corresponding tags. Use the soldering techniques described previously.

Transistor and Integrated Circuit Replacement. Transistors and integrated circuits should be replaced unless they are actually defective. Unnecessary replacement or interchanging of components may affect the calibration of the instrument. If a transistor or integrated circuit is removed during routine maintenance, be sure it is returned to its original socket.

Any replacement component should be of the original type or a direct replacement. Bend the leads to fit the socket correctly and cut off the leads the same length as the original component. Note the electrode configurations shown in Fig. 4-2.

Indicator Lamp Replacement. The Above Upper Limit, Within Limits, Below Lower Limit and Ready lamps on the front panel may be replaced. Refer to the Electrical Parts List for the appropriate part numbers. To remove a lamp, grip it just behind the lens with the fingernails and pull outward To install a new lamp, align the lamp pins with the socket pins and push the lamp into place.

TROUBLESHOOTING

Introduction

The following information is provided as an aid in locating and correcting trouble in the Type 241. Information contained in the Circuit Description, Performance Check and Diagrams sections is also helpful when troubleshooting the instrument.

Troubleshooting Aids

Diagrams. Circuit diagrams are given on foldout pages in Section 8. The circuit numbers and electrical values of components as well as significant voltages are shown on the diagrams. All front-panel and internal controls are given and all input and output connections are indicated.

Circuit Boards. The two internal circuit board photos in this section (Figs. 4-4 and 4-5) identify each electrical component by its circuit number. The circuit boards are also outlined with blue lines on the diagrams. The use of these illustrations and diagrams will aid in locating test points and components mounted on the circuit boards.

Wiring Color Code. All insulated wire in the Type 241 is color-coded to aid in circuit tracing Each power-supply voltage can be identified by the background color and three color stripes as given in Table 4-1. The widest color stripe denotes the first color of the code. A white background color indicates a positive voltage; a tan background, a negative voltage.

TABLE 4-1
Power Supply Wiring Color Code

Supply	Background Color	1st Stripe	2nd Stripe	3rd Stripe
+12 Volt	White	Brown	Red	Black
+3.8 Volt	White	Orange	Green	Brown
−3.5 Volt	Tan	Brown	Red	Black

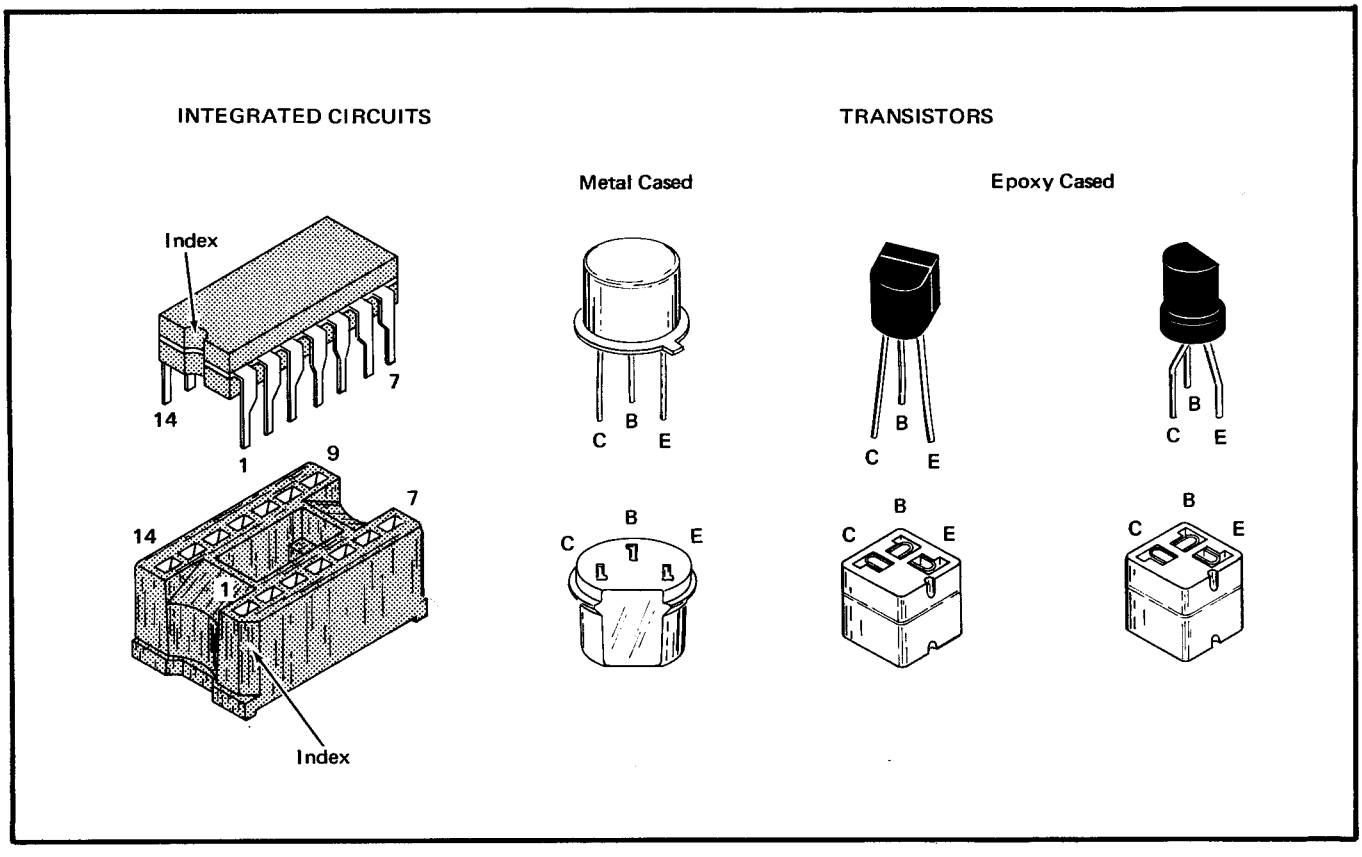

Fig. 4-2. Electrode configurations for socket-mounted transistors and integrated circuits.

Resistor Color Code. The resistance values of composition resistors are color-coded on the components with the standard EIA color code The color code is read starting with the stripe nearest the end of the resistor. Each resistor has four stripes representing two significant figures, a multiplier and a tolerance value (See Fig. 4-3).

Capacitor Markings. The capacitance values of common disc capacitors and small electrolytics are marked in microfarads on the side of the component body. The white ceramic capacitors used in the Type 241 are color-coded in picofarads using a modified EIA code (See Fig. 4-3).

Diode Color-Code. The cathode end of each glass enclosed diode is indicated by a stripe, a series of stripes or a dot. If the diode is a JEDEC registered device, a series of stripes indicates the diode type number using the EIA color code system. On diodes manufactured especially for Tektronix, a four-band color code system is used, the first band of which is either blue or pink. The last three bands identify the diode within a class of part numbers (e.g., a diode color-coded blue-brown-grey-green probably indicates Tektronix Part Number 152-0185-00). When in doubt, consult the Parts List.

Semiconductor Tests

Most circuit failures result from the failure of a transistor, diode, or integrated circuit due to normal aging and use. The following paragraphs detail various methods of checking semiconductor devices.

Transistor Checks. Transistor defects usually take the form of the transistor opening, shorting, or developing excessive leakage. The best method of checking transistors is by direct substitution. Be sure the voltage conditions of the circuit are not such that a replacement transistor might also be damaged. If substitute transistors are not available, use a dynamic tester (such as a Tektronix Type 575).

Static-type testers are not recommended since they do not check the device under operating conditions. However, if no other tester is immediately available, an ohmmeter will usually detect catastrophic failures in a transistor. As a general rule, use the R X 1k range where the current is usually limited to less than 2 mA and the internal voltage is usually 1 1/2 volts. Check the current and voltage of the ohmmeter by inserting a multimeter between the ohmmeter leads and measuring the current and voltage of the various ranges. When it has been determined which ohmmeter

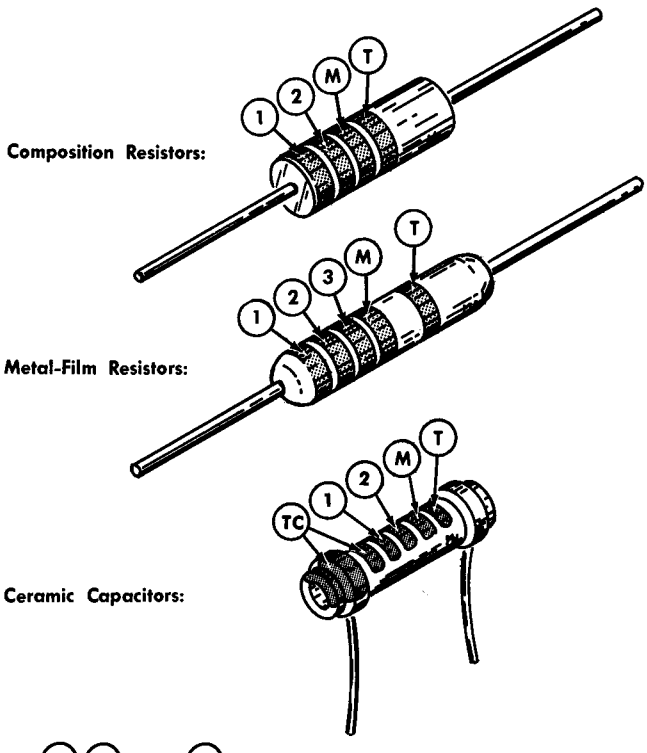

Resistor and Capacitor Color Code

Color	Significant Figures	Multiplier Resistors	Multiplier Capacitors	Tolerance Resistors	Tolerance Capacitors
Silver	---	10^{-2}	---	±10%	---
Gold	---	10^{-1}	---	±5%	---
Black	0	1	1	---	±20% or 2 pF*
Brown	1	10	10	±1%	±1% or 0.1 pF*
Red	2	10^2	10^2	±2%	±2%
Orange	3	10^3	10^3	±3%	±3%
Yellow	4	10^4	10^4	±4%	+100% —0%
Green	5	10^5	10^5	±0.5%	±5% or 0.5 pF*
Blue	6	10^6	10^6	---	---
Violet	7	---	---	---	---
Gray	8	---	10^{-2}	---	+80% —20% or 0.25 pF*
White	9	---	10^{-1}	---	±10% or 1 pF*
(none)	---	---	---	±20%	±10% or 1 pF*

*For capacitance of 10 pF or less.

NOTE: T and/or TC color code for capacitors depends upon manufacturer and capacitor type. May not be present in some cases.

Fig. 4-3. Standard EIA color coding for resistors and capacitors.

ranges will not harm the transistor, use those ranges to measure the transistor's resistance. Check the resistance in both directions through the junctions as listed in Table 4-2.

TABLE 4-2

Transistor Resistance Checks

Ohmmeter Connections[1]	Resistance Readings That Can Be Expected Using the R X 1k Range
Emitter-Collector	High readings both ways (about 60 kΩ to 500 kΩ).
Emitter-Base	High reading one way (about 200 kΩ or more). Low reading the other way (about 400 Ωto 2.5 kΩ).
Base-Collector	High reading one way (about 500 kΩ or more). Low reading the other way (about 400 Ω to 2.5 kΩ).

[1]Test prods from the ohmmeter are first connected one way to the transistor leads, then the test prods are reversed (connected the other way). Thus, the effects of the polarity reversal of the voltage applied from the ohmmeter to the transistor can be observed.

Integrated Circuit Checks. Integrated circuits are best checked by direct substitution. If a replacement is not available, check the input and output logic levels (in the circuit) with an oscilloscope or a high-impedance voltmeter.

Diode Checks. Diodes (except for tunnel diodes) can easily be checked for an open or shorted condition by measuring the resistance between terminals after unsoldering one end of the component. Use a resistance scale with an internal voltage between 800 mV and 3 volts. The resistance should measure very high (in megohm range) in one direction and low in the other.

Power Supply Voltage Checks

Power supply voltages and ripple should be checked before detailed circuit troubleshooting is performed. Erratic operation may be due to intermittent failure of power supply regulation. This type of failure can often be disclosed by observing each regulated voltage while varying the AC input voltage through the equipment operating range. An autotransformer can be inserted between the line source and the Type 230 to permit the input voltage variation.

SYSTEM TROUBLESHOOTING

General

This procedure is based on a package concept. That is, the system may be divided into three packages as follows:

Programming Package

The programming package is the Type 241 Programmer.

Measurement Package

The measurement package is composed of a Type 230 Digital Unit, a Type 568 Oscilloscope a Type 3S5 or Type 3S6 Programmable Sampling Unit, and a Type 3T5 or Type 3T6 Programmable Sampling Sweep. The Programmable Sampling Unit is equipped with two sampling heads.

Auxiliary Package

This includes other equipment used for signal generation pertinent to the test process. An example of this type of equipment may be the Type 114 Pulse Generator.

Troubleshooting the Measurement Package

Troubleshooting of the Type 230 and Type 568/3S5/3T5 combination can be simplified by checking the operation of each unit separately in internal mode and then as a system by including the Type 241 for external programming. If the trouble is apparent in an instrument other than the Type 241, refer to its instruction manual.

If difficulty is encountered while attempting to make a test via external programming, set the Type 568 plug-in units and Type 230 to internal mode and attempt to duplicate the test by front-panel means. If the problem does not disappear, the trouble is probably one of the following:

a. Type 230-Type 568 signals. For the most part these signals are conducted via rear-panel connector J101. If a good replacement cable is available, substitute the good cable. If the trouble is not obviously restricted to one of the two instruments monitor the signals through J101 with a test oscilloscope.

b. Type 230. The Type 230 requires five signals from the Type 568: 568 GATE (J101-21), 568 SWEEP (J101-20), 568 A SIGNAL (J101-11), 568 B SIGNAL (J101-23), and 568 CLOCK (J101-35). Although there are many other important lines between the two instruments, these five are absolutely necessary for the Type 230 to function. If these signals are present at the J101 input to the Type 230 and the instrument fails to make any measurement, the trouble is in the Type 230. If the Type 230 makes inaccurate measurements (for example, improper decimal position or units of measure) the trouble can be in either instrument, and the remainder of the J101 lines should be checked. See the Type 230 instruction manual for further details regarding internal troubleshooting.

c. Vertical and Horizontal plug-in units. If either of the units does not operate properly in either internal or external mode, consult the instrument instructions manual for detailed troubleshooting procedures.

d. Type 568. The Type 568 serves as a display unit for the Type 230 and the vertical and horizontal plug-in units. It also conveys signals from the plug-in units to the Type 230 and outside the instrument. If the trouble does not appear to be in the Type 230 or the oscilloscope plug-in units, the Type 568 should be checked for proper operation.

e. Fixturing. Although the fixturing device(s) is considered part of the auxiliary package, improper operation of this equipment can affect the measurement package. If possible, bypass the fixturing device when troubleshooting the measurement package. If the measurement package operates correctly when the fixture is bypassed, the trouble is isolated to the fixture.

If the measurement package malfunctions when externally programmed, but operates correctly while controlled by front-panel means, the trouble is located in another package or in the control signals between the measurement package and the Type 241. These signals are as follows:

a. 230 PRINT COMMAND (J204-27). Without this signal, the Type 241 cannot complete its operation in the Automatic Sequence mode.

b. 230 MINUS TRIGGER (J204-30). When the Type 230 Triggered Measurement switch is On, the instrument is dependent upon the Type 241 for a trigger to initiate each test. If the Type 230 operates correctly in the untriggered mode and does not operate in the triggered mode, check for a trigger from the Type 241.

c. READ RED, YELLOW, GREEN (J204 pins 19, 20, 21 respectively.) If a stop is selected in the Type 241 and the corresponding limit signal is true the Type 241 will stop as directed. Hence, an erroneous output from one of these lines can cause an undesired stop. The Type 230 and Type 241 Limit Lamps operated in unison. Failure in one or the other of these circuits is apparent from improper operation of the limit lamps.

Troubleshooting The Programming Package (Type 241)

Sometimes by grounding a gate or flipflop input or output where a true is required, a defect can be isolated to a particular area.

Ascertaining the mode in which a problem exists may be helpful in localizing the trouble. Examples of this type of isolation are listed as follows:

Manual Sequence Mode

a. Does not advance when the Advance button is pressed. Check Q84 and U24B. Removing and re-inserting Q84 presents a momentary false to one input of U24B and an ad-

vance is the result if U24B is good. If U24B checks good and removing and re-inserting Q84 produces an advance, it may be an indication that Q84 is shorted. Momentary grounding of Pin 5 of U24B should advance the Type 241 to the next test each time grounding is accomplished.

b. Selects Test Number 1 only and will not advance. This indicates that U90 output is held true preventing the flipflop from clocking the next flipflop. Check U90. Other flipflop failures can be determined by checking for proper binary outputs.

c. Advances but skips test(s):

Even or Odd Gates. If only even test numbers are sequenced every other time the Advance button is pressed, check Q33-Q34 Gate. Q34 collector may be held false or Q33 collector held true.

If only Odd test numbers are sequenced every other time the Advance button is pressed, check Q30-Q31 Gate. Q31 collector may be held false or Q30 collector held true.

If Even and Odd tests are paired alternately every other time the Advance button is pressed, either Q31 or Q34 may be saturated holding its collector true.

Decoder Gates. Refer to the Decoder section of the Logic Diagram (diagram 5). Each gate is numbered with respect to its test number responsibility. Observe the operation of the Active lamp. A faulty indication aids in localizing the trouble.

Examples:

If Test Numbers 8, 9, 10 and 11 fail to display, this may be the result of failure in Q52 circuitry.

If Test Numbers 10 and 11 fail to display, this may be the result of failure in Q47 circuitry.

If Test Number 11 fails to display, this may be the result of failure in Q11 circuitry. Thus the Type 241 itself will indicate where the trouble is in the Decoder circuit.

Reset Single Shot. If pressing the Reset button does not return the Type 241 to Ready, Q89 may be saturated, holding its collector true Thus, the sequence counter will not reset. If Q89 collector is held false (open) the sequence counter is held in the Ready state.

Automatic Sequence Mode

Troubleshooting in this mode is similar to Manual Sequence mode, except that PRINT COMMAND from the Type 230 is used. After the Advance button has been pressed and a measurement has been made, the Type 230 will deliver a PRINT COMMAND to automatically sequence the Type 241.

If this mode operates similar to the Manual Sequence mode, check for the absence of PRINT COMMAND.

It must be remembered that the above troubleshooting information is in the form of suggestions and does not substitute for an intuitive and knowledgeable approach which is required for complete troubleshooting.

NOTES

INTERCONNECTION TABLES

J201

PIN NO.	FUNCTION	RIGHT[1]	LEFT[2]	
1	A 0% POSITION 8	7		
2	A 0% POSITION 4	5		
3	A 0% POSITION 2	3		
4	A 0% POSITION 1	1		
5	A 0% POSITION 0.5	9		
6	A 0% PEAK 4 cm	11		
7	A 0% PEAK 2 cm	13		
8	VOLTS	14		
9	A 100% POSITION 8	15		
10	A 100% POSITION 4	8		
11	A 100% POSITION 2	6		
12	A 100% POSITION 1	4		
13	A 100% POSITION 0.5	2		
14	A 100% PEAK 4 cm	80		
15	A 100% PEAK 2 cm	10		
16	A CHOP	12		
17	PROGRAM COMMON			
18	PROGRAM COMMON			
19	B 0% POSITION 8		71	
20	B 0% POSITION 4		69	
21	B 0% POSITION 2		67	
22	B 0% POSITION 1		65	
23	B 0% POSITION 0.5		73	
24	B 0% PEAK 4 cm		75	
25	B 0% PEAK 2 cm		77	
26	MEASURE AVERAGE		78	
27	B 100% POSITION 8		79	
28	B 100% POSITION 4		72	
29	B 100% POSITION 2		70	
30	B 100% POSITION 1		68	
31	B 100% POSITION 0.5		66	
32	B 100% PEAK 4 cm		64	
33	B 100% PEAK 2 cm		74	
34	B CHOP		76	
35	PROGRAM COMMON			
36	PROGRAM COMMON			

J202

PIN NO.	FUNCTION	LEFT[2]	
1	START B CHANNEL	55	
2	START HORIZ mm	53	
3	START % BETWEEN	51	
4	START mm BELOW	49	
5	START OFFSET FROM 100%	57	
6	START MINUS SLOPE	59	
7	START SECOND SLOPE	61	
8	RESET INHIBIT	62	
9	START OFFSET 80	63	
10	START OFFSET 40	56	
11	START OFFSET 20	54	
12	START OFFSET 10	52	
13	START OFFSET 8	50	
14	START OFFSET 4	48	
15	START OFFSET 2	58	
16	START OFFSET 1	60	
17	PROGRAM COMMON		
18	PROGRAM COMMON		
19	STOP B CHANNEL	39	
20	STOP HORIZ mm	37	
21	STOP % BETWEEN	35	
22	STOP mm BELOW	33	
23	STOP OFFSET FROM 100%	41	
24	STOP MINUS SLOPE	43	
25	STOP SECOND SLOPE	45	
26	EXT SCALE		
27	STOP OFFSET 80	47	
28	STOP OFFSET 40	42	
29	STOP OFFSET 20	40	
30	STOP OFFSET 10	38	
31	STOP OFFSET 8	36	
32	STOP OFFSET 4	34	
33	STOP OFFSET 2	44	
34	STOP OFFSET 1	46	
35	PROGRAM COMMON		
36	PROGRAM COMMON		

J203

PIN NO.	FUNCTION	LEFT[2]	
1	EXT ÷2	18	
2	UPPER MINUS	23	
3	UPPER 2000	21	
4	UPPER 1000	19	
5	UPPER 800	17	
6	UPPER 400	25	
7	UPPER 200	27	
8	UPPER 100	29	
9	UPPER 80	31	
10	UPPER 40	28	
11	UPPER 20	26	
12	UPPER 10	24	
13	UPPER 8	22	
14	UPPER 4	20	
15	UPPER 2	30	
16	UPPER 1	32	
17	PROGRAM COMMON		
18	PROGRAM COMMON		
19	EXT ÷5		
20	LOWER MINUS	7	
21	LOWER 2000	5	
22	LOWER 1000	3	
23	LOWER 800	1	
24	LOWER 400	9	
25	LOWER 200	11	
26	LOWER 100	13	
27	LOWER 80	15	
28	LOWER 40	12	
29	LOWER 20	10	
30	LOWER 10	8	
31	LOWER 8	6	
32	LOWER 4	4	
33	LOWER 2	14	
34	LOWER 1	16	
35	PROGRAM COMMON		
36	PROGRAM COMMON		

[1]Right side of Interconnector circuit board (viewed from rear).

[2]Left side of Interconnector circuit board (viewed from rear).

J204

PIN NO.	FUNCTION	RIGHT[1]	CONTROL BOARD	LAMP DRIVER	J303						
1	DECIMAL 2										
2	DECIMAL 3										
3	DECIMAL 4										
4	NIXIE 'V'										
5	NIXIE 'S'										
6	NIXIE 'M'										
7	NIXIE 'μ'										
8	NIXIE 'N'										
9	HIGH SPEED	30									
10											
11											
12											
13											
14											
15	A CHOP										
16	B CHOP										
17	230 PROG COMMON		AH								
18	Chassis Ground		AR								
19	READ RED			I							
20	READ GREEN			F							
21	READ YELLOW			C							
22	+50 V										
23	+12 V		AD		23						
24	+3.8 V		AP								
25	−3.5 V		AT		25						
26	−50 V										
27	230 PRINT COMMAND		AO								
28	EXT HOLD										
29	PLUS TRIGGER										
30	230 MINUS TRIGGER		V								
31	SWEEP SPEEDUP										
32	SWEEP RESET										
33	A CHOP DRIVE				33						
34	B CHOP DRIVE				34						
35	Ground		AR								
36	Ground		AR								

J214

PIN NO.	FUNCTION	RIGHT[1]	
1	A PLUS POLARITY	71	
2	A SENSITIVITY 4	69	
3	A SENSITIVITY 2	67	
4	A SENSITIVITY 1	65	
5	A OFFSET 800	73	
6	A OFFSET 400	75	
7	A OFFSET 200	77	
8	A OFFSET 100	79	
9	A OFFSET 80	70	
10	A OFFSET 40	68	
11	A OFFSET 20	66	
12	A OFFSET 10	64	
13	A OFFSET 5	72	
14	B OFFSET 5	56	
15	SMOOTH	80	
16	A AUTO CAL GND[3]		
17	A AUTO CAL[3]		
18	B AUTO CAL[3]		
19	B PLUS POLARITY	49	
20	B SENSITIVITY 4	55	
21	B SENSITIVITY 2	53	
22	B SENSITIVITY 1	51	
23	B OFFSET 800	57	
24	B OFFSET 400	59	
25	B OFFSET 200	61	
26	B OFFSET 100	63	
27	B OFFSET 80	54	
28	B OFFSET 40	52	
29	B OFFSET 20	50	
30	B OFFSET 10	48	
31			
32	+300 V		
33	+125 V		
34	−12.2 V		
35	−100 V		
36	Ground		

[1]Right side of Interconnector circuit board (viewed from rear).

[3]Not used in the Type 241/R241.

J224

PIN NO.	FUNCTION	RIGHT[1]	CONTROL BOARD	
1	DECADE 10^{-8}	39		
2	DECADE 10^{-4}	37		
3	DECADE 10^{-2}	35		
4	DECADE 10^{-1}	38		
5	DELAY 200	29		
6	MULTIPLIER 4	41		
7	MULTIPLIER 2	43		
8	MULTIPLIER 1	45		
9	DELAY 8000	25		
10	DELAY 4000	23		
11	DELAY 2000	21		
12	DELAY 1000	19		
13	DELAY 800	17		
14	DELAY 400	27		
15	SWEEP RESET			
16	DELAY 100	31		
17	SWEEP SPEEDUP			
18	3T5/3T6 PROG COMMON		AK	
19	DELAY 80	33		
20	DELAY 40	22		
21	DELAY 20	20		
22	DELAY 10	18		
23	DELAY 8	16		
24	DELAY 4	24		
25	DELAY 2	26		
26	DELAY 1	28		
27				
28	Ground			
29	+3.6 V			
30				
31				
32				
33				
34				
35				
36	Ground			

J303

PIN NO.	FUNCTION	RIGHT[1]	CONTROL BOARD	J204						
1	REMOTE ADVANCE		AF							
2	REMOTE RESET		AC							
3	SPARE 1 (PIN 3)	74								
4	SPARE 2 (PIN 4)	76								
5	SPARE 3 (PIN 5)	78								
6	SPARE 4 (PIN 6)	58								
7	SPARE 5 (PIN 7)	60								
8	SPARE 6 (PIN 8)	62								
9	SPARE 7 (PIN 9)	36								
10	SPARE 8 (PIN 10)	34								
11	SPARE 9 (PIN 11)	32								
12	SPARE 10 (PIN 12)	47								
13	SPARE 11 (PIN 13)	40								
14	SPARE 12 (PIN 14)	42								
15	SPARE 13 (PIN 15)	44								
16	SPARE 14 (PIN 16)	46								
17	ENABLE 1		L							
18	ENABLE 2		D							
19	ENABLE 3		M							
20	ENABLE 4		E							
21	ENABLE 5		N							
22	ENABLE 6		F							
23	+12 V		AS	23						
24	ENABLE 7		O							
25	–3.5 V		AT	25						
26	ENABLE 8		G							
27	ENABLE 9		P							
28	ENABLE 10		H							
29	ENABLE 11		Q							
30	ENABLE 12		I							
31	ENABLE 13		R							
32	ENABLE 14		J							
33	A CHOP DRIVE			33						
34	B CHOP DRIVE			34						
35	ENABLE 15		S							
36	Ground									

[1] Right side of Interconnector circuit board (viewed from rear).

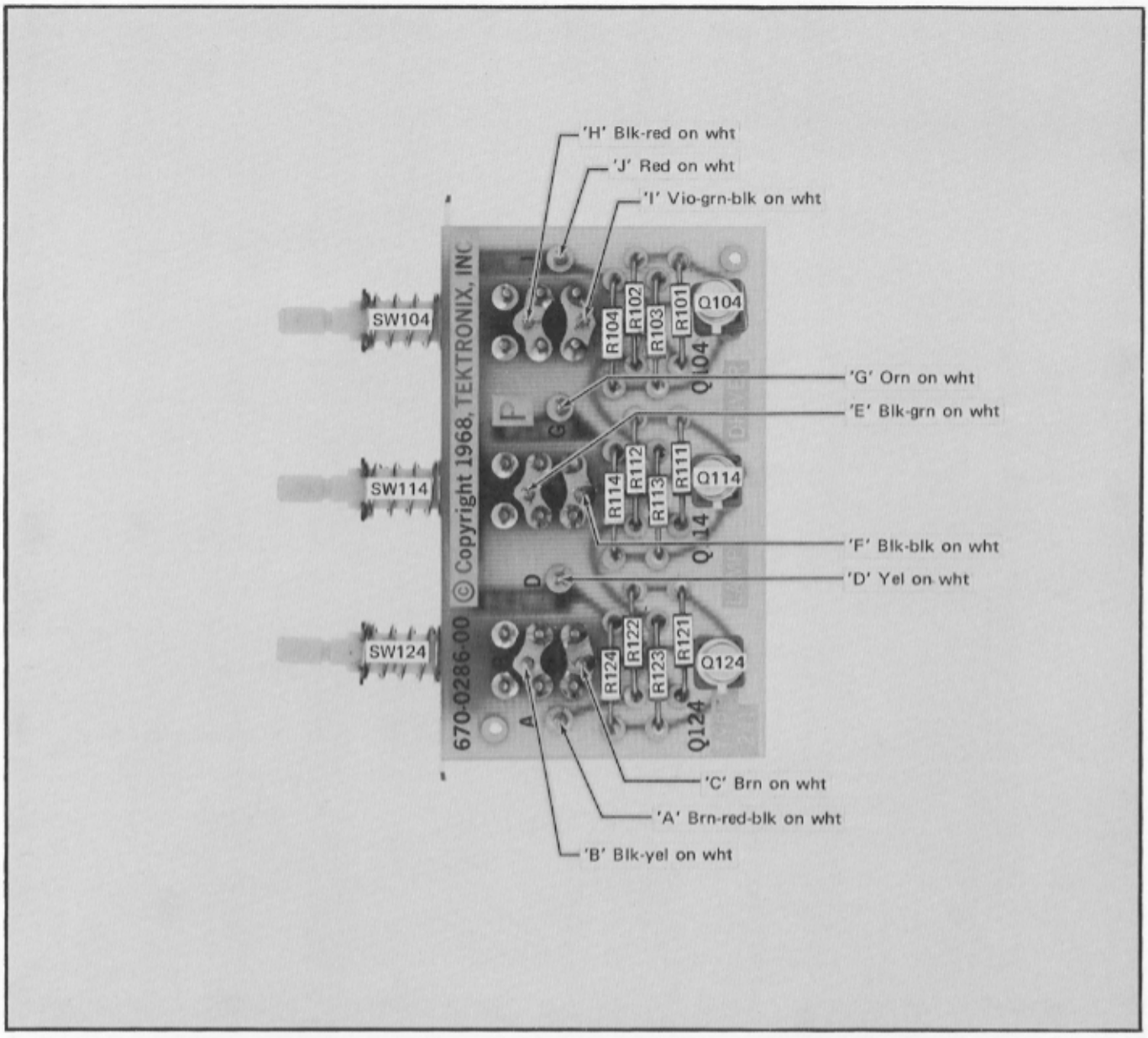

Fig. 4-4. Lamp Driver circuit board showing component locations and wiring color code.

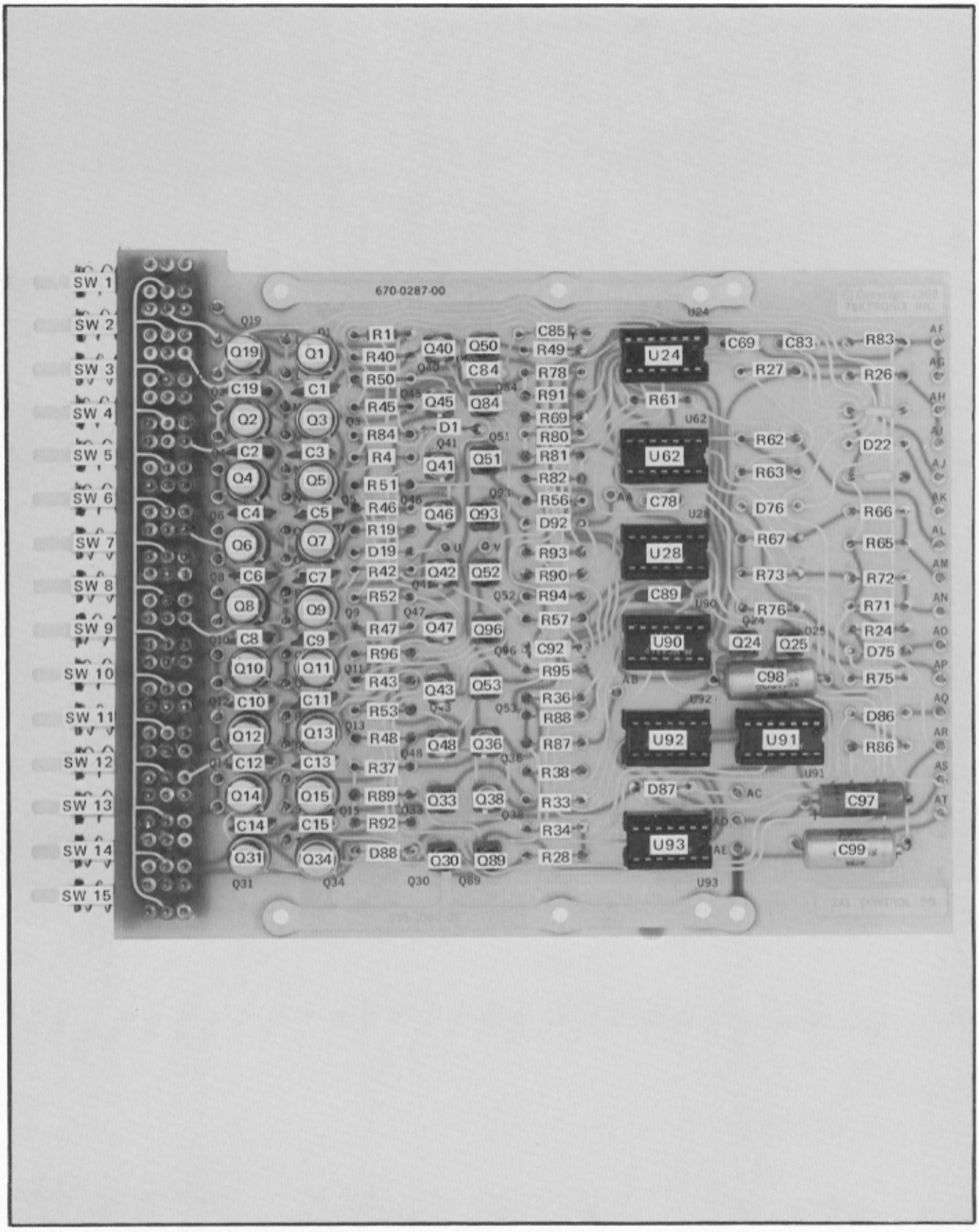

Fig. 4-5. Control circuit board showing component locations.

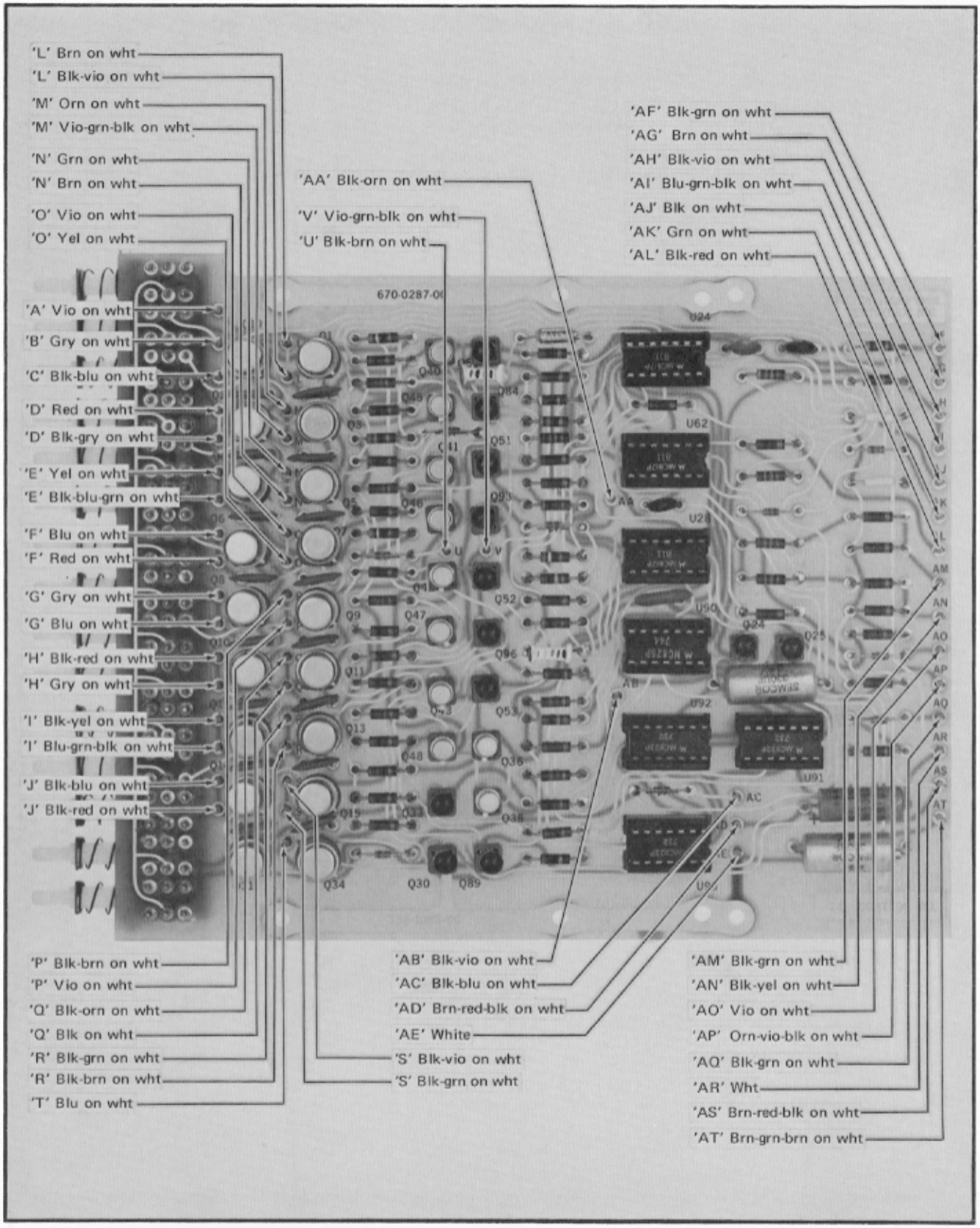

Fig. 4-6. Control circuit board showing wiring color code.

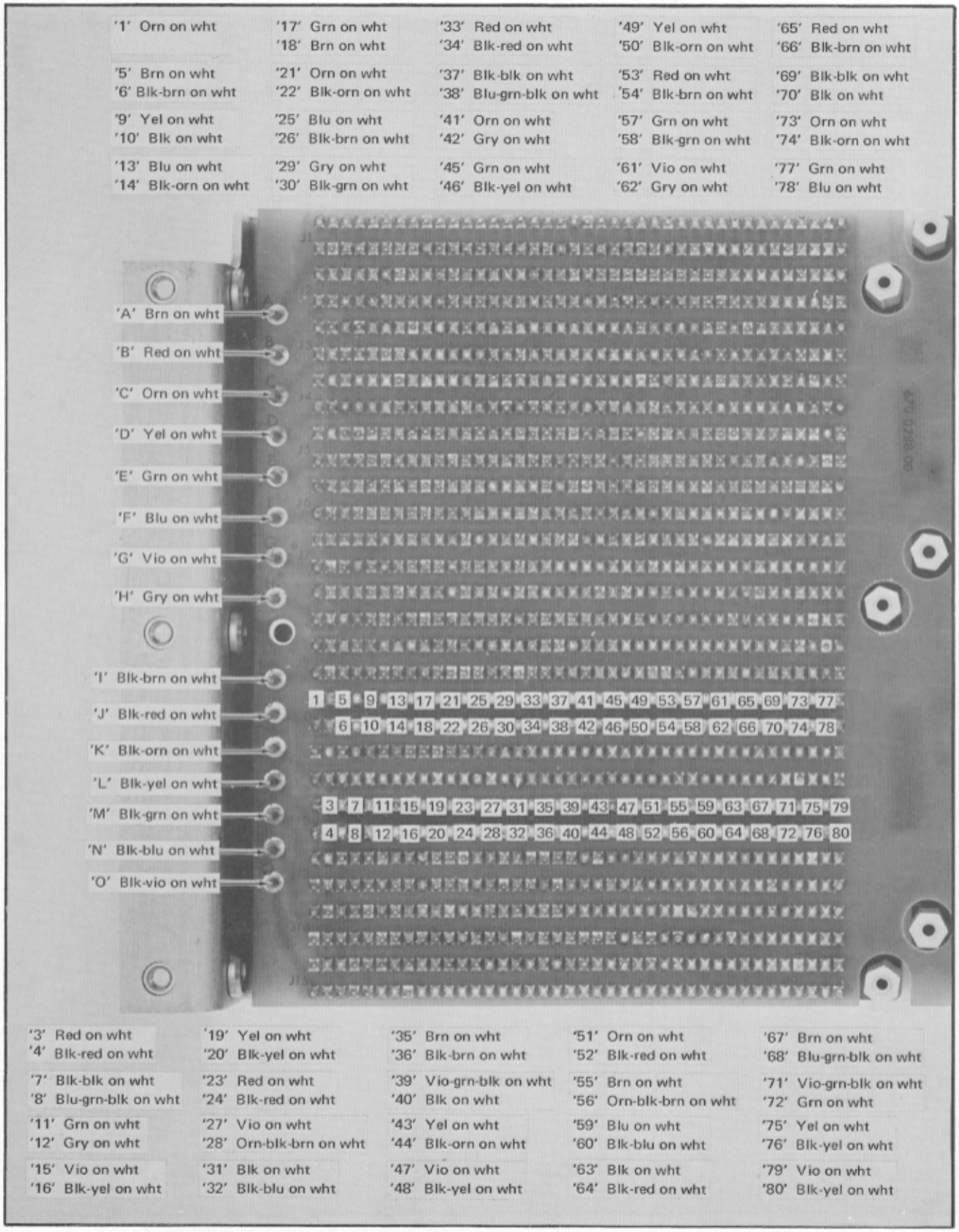

Fig 4-7. Left side of Interconnector circuit board (as viewed from the rear) showing wiring color code.

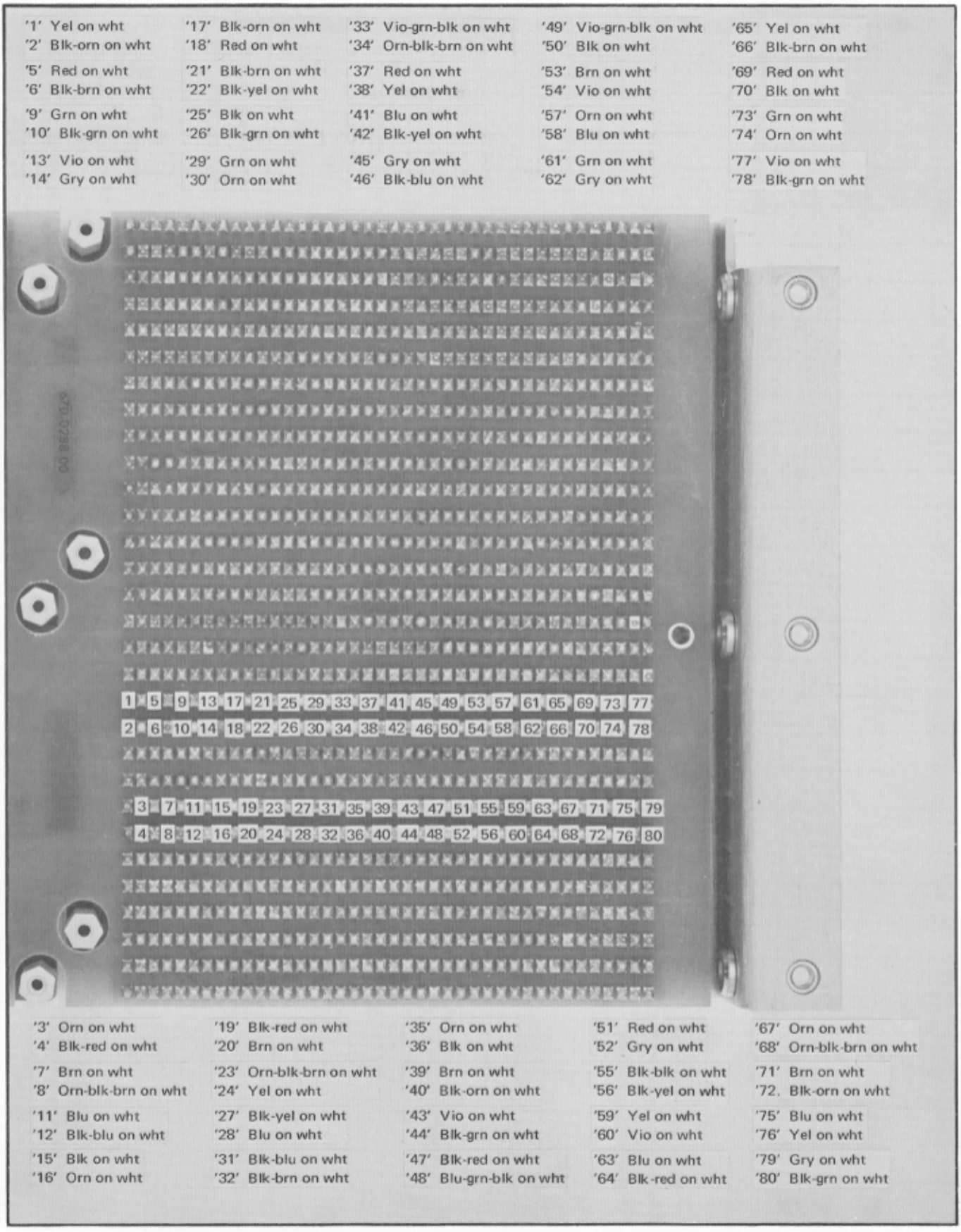

Fig. 4-8. Right side of Interconnector circuit board (as viewed from the rear) showing wiring color code.

NOTES

SECTION 5
PERFORMANCE CHECK

Change information, if any, affecting this section will be found at the rear of the manual.

General Information

This section of the manual provides a procedure for rapidly checking the performance of the Type 241. The procedure is intended to check the operation of the instrument by the use of front-panel controls only.

Performance of the Type 241 should be checked after each 1000 hours of operation, or at least once every six months, to assure that it is operating properly and accurately. Failure to meet the performance requirements given in this procedure indicates the need for internal troubleshooting.

EQUIPMENT REQUIRED

The following items of equipment are required for a complete performance check of the Type 241. All items are assumed to be calibrated and operating correctly.

1. Oscilloscope to provide measurement information to the Type 230. Tektronix Type 568 with programmable sampling plug-in units, such as the Type 3S5 Sampling (vertical) unit equipped with Type S1 Sampling Heads, and Type 3T5 Sampling Sweep unit recommended.

2. Type 230 Digital Unit to provide a readout for the Type 568.

3. Interconnecting cables:

J201 Cable, Tektronix Part Number 012-0131-00.
J202 Cable, Tektronix Part Number 012-0131-00.
J203 Cable, Tektronix Part Number 012-0131-00.
J204 Cable, Tektronix Part Number 012-0131-01.
J214 Cable, Tektronix Part Number 012-0131-00.
J224 Cable, Tektronix Part Number 012-0131-00.

PERFORMANCE CHECK PROCEDURE

Preliminary Procedure

a. Connect the seven 36-pin interconnecting cables using the procedure given in Section 2 under First-Time Operation.

b. Insert the sampling vertical unit (with sampling heads) and the horizontal plug-in unit into the Type 568.

c. Connect the Type 230 and Type 568 to a suitable power source and turn on all of the equipment.

d. Remove all of the program cards from the Type 241.

e. Set the front-panel controls of the equipment as follows:

Type 241

Test Mode	Single
All Pushbuttons	Released

Type 568

Type 3S5 Mode switch	Ext Prog
Type 3T5 Program Selector	Ext
Trigger Mode	Int
Sensitivity	Clockwise

Type 230

Measurement Mode	Ext
Triggered Measurement	Off
Display Time	Clockwise

Fig. 5-1 shows the equipment setup for the performance check.

1. Check Internal Program Mode

a. Check that the Type 241 Ready lamp is illuminated. Check that similar Limit lamps of the Type 241 and Type 230 are illuminated.

b. Switch the Type 3T5 Program Selector switch to Int. The Type 241 Ready lamp should turn off and the Limit lamps should remain illuminated.

c. Remove the Type 3T5 plug-in unit. The Type 241 Ready lamp should illuminate.

d. Switch the Type 230 Measurement Mode switch to Time. The Type 241 Ready lamp and Limit lamp should both turn off. Re-insert the plug-in unit and return its Program Selector switch to Ext. Return the Type 230 Measurement Mode switch to Ext. Prog.

2. Check Single (Select Test) Mode

a. The Ready lamp should be illuminated.

b. Press each Test button in turn. Check that the corresponding Active lamp is illuminated and that the Ready lamp remains illuminated.

c. Pull the Type 3T5 out of the oscilloscope and repeat step 2b. Check that the Type 241 still operates properly. Return the Type 3T5 to its proper place in the oscilloscope.

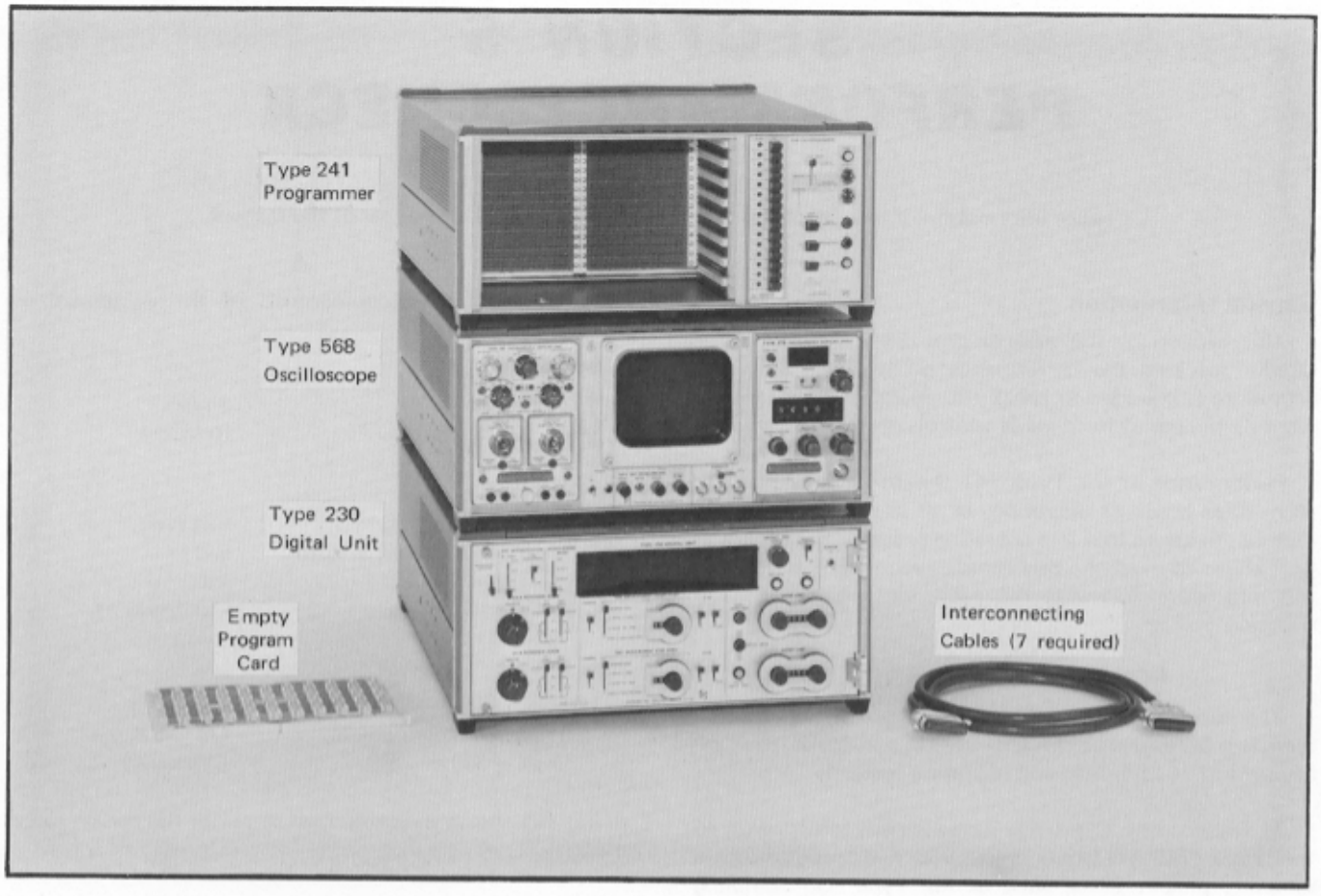

Fig. 5-1. Performance Check Test Setup.

3. Check Manual Sequence Mode

a. Check Advance. Set the Type 241 Test Mode switch to Manual Sequence and check that the Ready lamp is illuminated. Release all Test pushbuttons. Press the Advance button. Check that the Ready lamp goes out and that Active lamp number 1 is illuminated. Press the Advance button repeatedly. The next Active lamp in sequence illuminates and the preceding lamp goes out each time the Advance button is pressed. Check that the Ready lamp illuminates when the Advance button is pressed following Test number 15.

b. Check Reset. Press the Advance button. Active lamp number 1 will illuminate. Press the Reset button and check that the Ready lamp illuminates and that no Active lamp is illuminated. Advance to Test numbers 2 through 15 in succession. At each test, check that the Reset button returns the Type 241 to the Ready condition.

4. Check Automatic Sequence Mode

a. Set the Type 241 Test Mode switch to Automatic Sequence. Adjust the Type 230 Display Time control so that the Type 230 Ready lamp flashes approximately once each second.

b. Press the Type 241 Advance button once and check that each Active lamp illuminates automatically in sequence and that the Ready lamp illuminates after test number 15.

NOTE

In this and the following sequence-type operations, Active lamp number 1 will illuminate for a shorter period of time than the display time. This is a normal condition.

5. Check Select Last Test

a. Actuate Test number 1 pushbutton. Press the Advance button and check that Active lamp number 1 illuminates momentarily, then the instrument returns to Ready.

b. Actuate Test number 2 pushbutton. Press the Advance button and check that Test number 2 is the last test that sequences before the Ready lamp illuminates.

c. Continue in this manner until all 15 tests have been checked.

6. Check Stop Sequence

a. Within Limits

A program card should be set up for this test. Insert 5 diodes as follows:

Limits only

Upper	+ (no diode)
	3000
Lower	—
	3000

Insert the program card into Test position No. 12. Release all Test pushbuttons and actuate the Within Limits Stop Sequence pushbutton. Set the Type 230 Display Time control fully counterclockwise. Press the Advance button. The Type 241 should commence automatic sequencing and stop at Test No. 12.

NOTE

Sequencing while the Within Limits Stop Sequence pushbutton is actuated is dependent on the occurence of out-of-limit conditions. Normally with no program cards except the one Sample Program card in the instrument, random noise will produce the required out-of-limit conditions.

Release the Within Limits Stop Sequence pushbutton. Press the Advance button. Automatic sequencing should continue through reset.

Remove the program card and modify the program as follows:

Limits only

Upper	—
Lower	+ (no diode)

Insert the program card into Test position No. 12. Set the Test Mode switch to Single and actuate the No. 12 Test pushbutton. The Above Upper Limit and Below Lower Limit lamps should intermittently illuminate.

b. Above Upper Limit

Release the Test pushbutton. Switch the Test Mode switch to Automatic Sequence, actuate the Above Upper Limit switch and press the Advance button. The Type 241 should start sequencing and stop at the Sample Program on the red (Above Upper Limit) condition.

c. Below Lower Limit

Release the Above Upper Limit switch and actuate the Below Lower Limit switch. Press the Reset button, then the Advance button. The Type 241 should sequence to the Sample Program and stop on the yellow (Below Lower Limit) condition.

NOTES

ABBREVIATIONS AND SYMBOLS

A or amp	amperes
AC or ac	alternating current
AF	audio frequency
α	alpha—common-base current amplification factor
AM	amplitude modulation
$\approx$	approximately equal to
β	beta—common-emitter current amplification factor
BHB	binding head brass
BHS	binding head steel
BNC	baby series "N" connector
$\times$	by or times
C	carbon
C	capacitance
cap.	capacitor
cer	ceramic
cm	centimeter
comp	composition
conn	connector
$\sim$	cycle
c/s or cps	cycles per second
CRT	cathode-ray tube
csk	countersunk
Δ	increment
dB	decibel
dBm	decibel referred to one milliwatt
DC or dc	direct current
DE	double end
°	degrees
°C	degrees Celsius (degrees centigrade)
°F	degrees Fahrenheit
°K	degrees Kelvin
dia	diameter
$\div$	divide by
div	division
EHF	extremely high frequency
elect.	electrolytic
EMC	electrolytic, metal cased
EMI	electromagnetic interference (see RFI)
EMT	electrolytic, metal tubular
ε	epsilon—2.71828 or % of error
$\geq$	equal to or greater than
$\leq$	equal to or less than
ext	external
F or f	farad
F & I	focus and intensity
FHB	flat head brass
FHS	flat head steel
Fil HB	fillister head brass
Fil HS	fillister head steel
FM	frequency modulation
ft	feet or foot
G	giga or 10^9
g	acceleration due to gravity
Ge	germanium
GHz	gigahertz
GMV	guaranteed minimum value
GR	General Radio
$>$	greater than
H or h	henry
h	height or high
hex.	hexagonal
HF	high frequency
HHB	hex head brass
HHS	hex head steel
HSB	hex socket brass
HSS	hex socket steel
HV	high voltage
Hz	hertz (cycles per second)
ID	inside diameter
IF	intermediate frequency
in.	inch or inches
incd	incandescent
∞	infinity
int	internal
$\int$	integral
k	kilohms or kilo (10^3)
k Ω	kilohm
kc	kilocycle
kHz	kilohertz
L	inductance
λ	lambda—wavelength
$\gg$	large compared with
$<$	less than
LF	low frequency
lg	length or long
LV	low voltage
M	mega or 10^6
m	milli or 10^{-3}
MΩ or meg	megohm
μ	micro or 10^{-6}
mc	megacycle
met.	metal
MHz	megahertz
mm	millimeter
ms	millisecond
—	minus
mtg hdw	mounting hardware
n	nano or 10^{-9}
no. or #	number
ns	nanosecond
OD	outside diameter
OHB	oval head brass
OHS	oval head steel
Ω	omega—ohms
ω	omega—angular frequency
p	pico or 10^{-12}
/	per
%	percent
PHB	pan head brass
ϕ	phi—phase angle
π	pi—3.1416
PHS	pan head steel
+	plus
$\pm$	plus or minus
PIV	peak inverse voltage
plstc	plastic
PMC	paper, metal cased
poly	polystyrene
prec	precision
PT	paper, tubular
PTM	paper or plastic, tubular, molded
pwr	power
Q	figure of merit
RC	resistance capacitance
RF	radio frequency
RFI	radio frequency interference (see EMI)
RHB	round head brass
ρ	rho—resistivity
RHS	round head steel
r/min or rpm	revolutions per minute
RMS	root mean square
s or sec.	second
SE	single end
Si	silicon
SN or S/N	serial number
$\ll$	small compared with
T	tera or 10^{12}
TC	temperature compensated
TD	tunnel diode
THB	truss head brass
θ	theta—angular phase displacement
thk	thick
THS	truss head steel
tub.	tubular
UHF	ultra high frequency
V	volt
VAC	volts, alternating current
var	variable
VDC	volts, direct current
VHF	very high frequency
VSWR	voltage standing wave ratio
W	watt
w	wide or width
w/	with
w/o	without
WW	wire-wound
xmfr	transformer

PARTS ORDERING INFORMATION

Replacement parts are available from or through your local Tektronix, Inc. Field Office or representative.

Changes to Tektronix instruments are sometimes made to accommodate improved components as they become available, and to give you the benefit of the latest circuit improvements developed in our engineering department. It is therefore important, when ordering parts, to include the following information in your order: Part number, instrument type or number, serial or model number, and modification number if applicable.

If a part you have ordered has been replaced with a new or improved part, your local Tektronix, Inc. Field Office or representative will contact you concerning any change in part number.

SPECIAL NOTES AND SYMBOLS

×000	Part first added at this serial number
00×	Part removed after this serial number
*000-0000-00	Asterisk preceding Tektronix Part Number indicates manufactured by or for Tektronix, Inc., or reworked or checked components.
Use 000-0000-00	Part number indicated is direct replacement.
	Screwdriver adjustment.
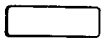	Control, adjustment or connector.

SECTION 6
ELECTRICAL PARTS LIST

Values are fixed unless marked Variable.

Ckt. No.	Tektronix Part No.	Serial/Model No. Eff	Disc	Description
				Bulbs
B1	150-0046-00			Incandescent #21070
B2	150-0046-00			Incandescent #21070
B3	150-0046-00			Incandescent #21070
B4	150-0046-00			Incandescent #21070
B5	150-0046-00			Incandescent #21070
B6	150-0046-00			Incandescent #21070
B7	150-0046-00			Incandescent #21070
B8	150-0046-00			Incandescent #21070
B9	150-0046-00			Incandescent #21070
B10	150-0046-00			Incandescent #21070
B11	150-0046-00			Incandescent #21070
B12	150-0046-00			Incandescent #21070
B13	150-0046-00			Incandescent #21070
B14	150-0046-00			Incandescent #21070
B15	150-0046-00			Incandescent #21070
B19	150-0043-00			Incandescent, Assembly
B104	150-0066-00			Incandescent, 10 V, 40 mA, red lens
B114	150-0065-00			Incandescent, 10 V, 40 mA, green lens
B124	150-0064-00			Incandescent, 10 V, 40 mA, amber lens
				Capacitors
Tolerance ±20% unless otherwise indicated.				
C1	283-0004-00			0.02 μF Cer 150 V
C2	283-0004-00			0.02 μF Cer 150 V
C3	283-0004-00			0.02 μF Cer 150 V
C4	283-0004-00			0.02 μF Cer 150 V
C5	283-0004-00			0.02 μF Cer 150 V
C6	283-0004-00			0.02 μF Cer 150 V
C7	283-0004-00			0.02 μF Cer 150 V
C8	283-0004-00			0.02 μF Cer 150 V
C9	283-0004-00			0.02 μF Cer 150 V
C10	283-0004-00			0.02 μF Cer 150 V

Ckt. No.	Tektronix Part No.	Serial/Model No. Eff	Disc	Description		
			Capacitors (cont)			
C11	283-0004-00		0.02 μF	Cer	150 V	
C12	283-0004-00		0.02 μF	Cer	150 V	
C13	283-0004-00		0.02 μF	Cer	150 V	
C14	283-0004-00		0.02 μF	Cer	150 V	
C15	283-0004-00		0.02 μF	Cer	150 V	
C19	283-0004-00		0.02 μF	Cer	150 V	
C69	283-0032-00		470 pF	Cer	500 V	5%
C78	283-0000-00		0.001 μF	Cer	500 V	
C83	283-0000-00		0.001 μF	Cer	500 V	
C84	281-0605-00		200 pF	Cer	500 V	
C85	290-0183-00		1 μF	Elect.	35 V	10%
C89	283-0010-00		0.05 μF	Cer	50 V	
C92	281-0525-00		470 pF	Cer	500 V	
C97	290-0158-00		50 μF	Elect.	25 V	+75%-15%
C98	290-0138-00		330 μF	Elect.	6 V	
C99	290-0138-00		330 μF	Elect.	6 V	
			Semiconductor Device, Diodes			
D1	*152-0185-00		Silicon	Replaceable by 1N4152		
D19	*152-0185-00		Silicon	Replaceable by 1N4152		
D22	*152-0185-00		Silicon	Replaceable by 1N4152		
D75	*152-0185-00		Silicon	Replaceable by 1N4152		
D76	*152-0185-00		Silicon	Replaceable by 1N4152		
D86	*152-0185-00		Silicon	Replaceable by 1N4152		
D87	*152-0185-00		Silicon	Replaceable by 1N4152		
D88	*152-0185-00		Silicon	Replaceable by 1N4152		
D92	*152-0185-00		Silicon	Replaceable by 1N4152		
			Connectors			
J201	131-0294-06		36 Pin, female			
J202	131-0294-06		36 Pin, female			
J203	131-0294-06		36 Pin, female			
J204	131-0294-05		36 Pin, female			
J214	131-0294-06		36 Pin, female			
J224	131-0294-06		36 Pin, female			
J303	131-0294-04		36 Pin, female			

Ckt. No.	Tektronix Part No.	Serial/Model No. Eff Disc	Description
		Transistors	
Q1	*151-0183-00	Silicon	Selected from 2N2192
Q2	*151-0183-00	Silicon	Selected from 2N2192
Q3	*151-0183-00	Silicon	Selected from 2N2192
Q4	*151-0183-00	Silicon	Selected from 2N2192
Q5	*151-0183-00	Silicon	Selected from 2N2192
Q6	*151-0183-00	Silicon	Selected from 2N2192
Q7	*151-0183-00	Silicon	Selected from 2N2192
Q8	*151-0183-00	Silicon	Selected from 2N2192
Q9	*151-0183-00	Silicon	Selected from 2N2192
Q10	*151-0183-00	Silicon	Selected from 2N2192
Q11	*151-0183-00	Silicon	Selected from 2N2192
Q12	*151-0183-00	Silicon	Selected from 2N2192
Q13	*151-0183-00	Silicon	Selected from 2N2192
Q14	*151-0183-00	Silicon	Selected from 2N2192
Q15	*151-0183-00	Silicon	Selected from 2N2192
Q19	*151-0183-00	Silicon	Selected from 2N2192
Q24	*151-0190-01	Silicon	Tek Spec
Q25	*151-0190-01	Silicon	Tek Spec
Q30	*151-0190-01	Silicon	Tek Spec
Q31	*151-0183-00	Silicon	Selected from 2N2192
Q33	*151-0190-01	Silicon	Tek Spec
Q34	*151-0183-00	Silicon	Selected from 2N2192
Q36	*151-0133-00	Silicon	Tek Spec
Q38	*151-0133-00	Silicon	Tek Spec
Q40	*151-0133-00	Silicon	Tek Spec
Q41	*151-0133-00	Silicon	Tek Spec
Q42	*151-0133-00	Silicon	Tek Spec
Q43	*151-0133-00	Silicon	Tek Spec
Q45	*151-0133-00	Silicon	Tek Spec
Q46	*151-0133-00	Silicon	Tek Sepc
Q47	*151-0133-00	Silicon	Tek Spec
Q48	*151-0133-00	Silicon	Tek Spec
Q50	*151-0190-01	Silicon	Tek Spec
Q51	*151-0190-01	Silicon	Tek Spec
Q52	*151-0190-01	Silicon	Tek Spec
Q53	*151-0190-01	Silicon	Tek Spec
Q84	151-0223-00	Silicon	2N4275
Q89	*151-0190-01	Silicon	Tek Spec
Q93	151-0223-00	Silicon	2N4275
Q96	*151-0190-01	Silicon	Tek Spec

Ckt. No.	Tektronix Part No.	Serial/Model No. Eff	Disc	Description	
		Transistors (cont)			
Q104	*151-0193-00		Silicon	Tek Spec	
Q114	*151-0193-00		Silicon	Tek Spec	
Q124	*151-0193-00		Silicon	Tek Spec	
		Resistors			
Resistors are fixed, composition, ±10% unless otherwise indicated.					
R1	315-0150-00		15 Ω	1/4 W	5%
R19	315-0390-00		39 Ω	1/4 W	5%
R24	315-0272-00		2.7 kΩ	1/4 W	5%
R26	315-0153-00		15 kΩ	1/4 W	5%
R27	315-0433-00		43 kΩ	1/4 W	5%
R28	315-0820-00		82 Ω	1/4 W	5%
R33	315-0201-00		200 Ω	1/4 W	5%
R34	315-0820-00		82 Ω	1/4 W	5%
R36	315-0561-00		560 Ω	1/4 W	5%
R37	315-0680-00		68 Ω	1/4 W	5%
R38	315-0561-00		560 Ω	1/4 W	5%
R40	315-0102-00		1 kΩ	1/4 W	5%
R41	315-0102-00		1 kΩ	1/4 W	5%
R42	315-0102-00		1 kΩ	1/4 W	5%
R43	315-0102-00		1 kΩ	1/4 W	5%
R45	315-0102-00		1 kΩ	1/4 W	5%
R46	315-0102-00		1 kΩ	1/4 W	5%
R47	315-0102-00		1 kΩ	1/4 W	5%
R48	315-0102-00		1 kΩ	1/4 W	5%
R49	315-0102-00		1 kΩ	1/4 W	5%
R50	315-0273-00		27 kΩ	1/4 W	5%
R51	315-0273-00		27 kΩ	1/4 W	5%
R52	315-0273-00		27 kΩ	1/4 W	5%
R53	315-0273-00		27 kΩ	1/4 W	5%
R56	315-0301-00		300 Ω	1/4 W	5%
R57	315-0301-00		300 Ω	1/4 W	5%
R61	315-0752-00		7.5 kΩ	1/4 W	5%
R62	315-0752-00		7.5 kΩ	1/4 W	5%
R63	315-0133-00		13 kΩ	1/4 W	5%
R65	315-0752-00		7.5 kΩ	1/4 W	5%

Ckt. No.	Tektronix Part No.	Serial/Model No. Eff	Disc	Description		
				Resistors (cont)		
R66	315-0752-00			7.5 kΩ	1/4 W	5%
R67	315-0133-00			13 kΩ	1/4 W	5%
R69	315-0332-00			3.3 kΩ	1/4 W	5%
R71	315-0752-00			7.5 kΩ	1/4 W	5%
R72	315-0752-00			7.5 kΩ	1/4 W	5%
R73	315-0133-00			13 kΩ	1/4 W	5%
R75	315-0752-00			7.5 kΩ	1/4 W	5%
R76	315-0752-00			7.5 kΩ	1/4 W	5%
R78	315-0822-00			8.2 kΩ	1/4 W	5%
R80	315-0133-00			13 kΩ	1/4 W	5%
R81	315-0752-00			7.5 kΩ	1/4 W	5%
R82	315-0752-00			7.5 kΩ	1/4 W	5%
R83	315-0475-00			4.7 MΩ	1/4 W	5%
R84	315-0332-00			3.3 kΩ	1/4 W	5%
R86	315-0622-00			6.2 kΩ	1/4 W	5%
R87	315-0752-00			7.5 kΩ	1/4 W	5%
R88	315-0103-00			10 kΩ	1/4 W	5%
R89	315-0102-00			1 kΩ	1/4 W	5%
R90	315-0104-00			100 kΩ	1/4 W	5%
R91	315-0912-00			9.1 kΩ	1/4 W	5%
R92	315-0752-00			7.5 kΩ	1/4 W	5%
R93	315-0392-00			3.9 kΩ	1/4 W	5%
R94	315-0752-00			7.5 kΩ	1/4 W	5%
R95	315-0622-00			6.2 kΩ	1/4 W	5%
R96	315-0302-00			3 kΩ	1/4 W	5%
R101	315-0332-00			3.3 kΩ	1/4 W	5%
R102	315-0122-00			1.2 kΩ	1/4 W	5%
R103	315-0390-00			39 Ω	1/4 W	5%
R104	315-0911-00			910 Ω	1/4 W	5%
R111	315-0332-00			3.3 kΩ	1/4 W	5%
R112	315-0122-00			1.2 kΩ	1/4 W	5%
R113	315-0390-00			39 Ω	1/4 W	5%
R114	315-0911-00			910 Ω	1/4 W	5%
R121	315-0332-00			3.3 kΩ	1/4 W	5%
R122	315-0122-00			1.2 kΩ	1/4 W	5%
R123	315-0390-00			39 Ω	1/4 W	5%
R124	315-0911-00			910 Ω	1/4 W	5%

Ckt. No.	Tektronix Part No.	Serial/Model No. Eff	Disc	Description	
			Switches		
	Wired or Unwired				
SW1, SW2, SW3, SW4, SW5, SW6, SW7, SW8, SW9, SW10, SW11, SW12, SW13, SW14, SW15	260-1006-00			Push, 15 Button	
SW19	260-0776-00			Lever	TEST MODE
SW83	260-0574-01			Push Button	ADVANCE
SW88	260-0574-01			Push Button	RESET
SW104, SW114, SW124	260-1007-00			Push, 3 Button	ABOVE UPPER LIMIT WITHIN LIMITS BELOW LOWER LIMIT
			Integrated Circuits		
U24 A,B,C,D	156-0018-00			Quad 2-Input Gate	Replaceable by Motorola MC817P
U28 A,B,C,D	156-0018-00			Quad 2-Input Gate	Replaceable by Motorola MC817P
U62 A,B,C,D	156-0018-00			Quad 2-Input Gate	Replaceable by Motorola MC817P
U90	156-0028-00			J-K Flipflop	Replaceable by Motorola MC826P
U91	156-0019-00			J-K Flipflop	Replaceable by Motorola MC822P
U92	156-0019-00			J-K Flipflop	Replaceable by Motorola MC822P
U93	156-0019-00			J-K Flipflop	Replaceable by Motorola MC822P

FIGURE AND INDEX NUMBERS

Items in this section are referenced by figure and index numbers to the illustrations which appear on the pullout pages immediately following the Diagrams section of this instruction manual.

INDENTATION SYSTEM

This mechanical parts list is indented to indicate item relationships. Following is an example of the indentation system used in the Description column.

Assembly and/or Component
Detail Part of Assembly and/or Component
mounting hardware for Detail Part
Parts of Detail Part
mounting hardware for Parts of Detail Part
mounting hardware for Assembly and/or Component

Mounting hardware always appears in the same indentation as the item it mounts, while the detail parts are indented to the right. Indented items are part of, and included with, the next higher indentation.

Mounting hardware must be purchased separately, unless otherwise specified.

PARTS ORDERING INFORMATION

Replacement parts are available from or through your local Tektronix, Inc. Field Office or representative.

Changes to Tektronix instruments are sometimes made to accommodate improved components as they become available, and to give you the benefit of the latest circuit improvements developed in our engineering department. It is therefore important, when ordering parts, to include the following information in your order: Part number, instrument type or number, serial or model number, and modification number if applicable.

If a part you have ordered has been replaced with a new or improved part, your local Tektronix, Inc. Field Office or representative will contact you concerning any change in part number.

Change information, if any, is located at the rear of this manual.

ABBREVIATIONS AND SYMBOLS

For an explanation of the abbreviations and symbols used in this section, please refer to the page immediately preceding the Electrical Parts List in this instruction manual.

INDEX OF MECHANICAL PARTS LIST ILLUSTRATIONS
(Located behind diagrams)

FIG. 1 EXPLODED
FIG. 2 STORAGE TRAY & CABINET
FIG. 3 STANDARD ACCESSORIES
OPTIONAL ACCESSORIES (not shown)

SECTION 7
MECHANICAL PARTS LIST

FIG. 1 EXPLODED

Fig. & Index No.	Tektronix Part No.	Serial/Model No. Eff	Serial/Model No. Disc	Qty	Description
1-1	333-1094-01			1	PANEL, front
	- - - - - -			-	mounting hardware: (not included w/panel)
-2	210-0405-00			2	NUT, hex., 2-56 x 3/16 inch
-3	211-0001-00			2	SCREW, 2-56 x 1/4 inch, RHS
-4	366-0215-01			1	KNOB, charcoal--TEST MODE
-5	260-0776-00			1	SWITCH, lever--TEST MODE
	- - - - - -			-	mounting hardware: (not included w/switch)
-6	220-0413-00			2	NUT, switch mounting
-7	260-0574-01			1	SWITCH, push - - ADVANCE
	- - - - - -			-	mounting hardware: (not included w/switch)
-8	210-0241-00			1	LUG, terminal 0.515 ID x 0.625 inch OD
	354-0055-00			1	RING, switch locking
	210-0902-00			1	WASHER, flat, 0.470 ID x 21/32 inch OD
-9	210-0473-00			1	NUT, 12 sided, 15/32-32 x 5/64 inch
-10	260-0574-01			1	SWITCH, push - - RESET
	- - - - - -			-	mounting hardware: (not included w/switch)
-11	354-0055-00			1	RING, switch locking
	210-0902-00			1	WASHER, flat, 0.470 ID x 21/32 inch OD
-12	210-0473-00			1	NUT, 12 sided, 15/32-32 x 5/64 inch
-13	366-1078-00			18	PUSHBUTTON, plastic, charcoal
-14	136-0164-00			4	SOCKET, lamp
	- - - - - -			-	mounting hardware for each: (not included w/socket)
-15	210-0413-00			1	NUT, hex., 3/8-32 x 1/2 inch
	210-0978-00			1	WASHER, flat, 3/8 ID x 1/2 inch OD
-16	220-0480-02			1	NUT, plain, 3/8-32 x 0.438 inch
-17	352-0084-00			15	HOLDER, neon
-18	378-0541-00			15	FILTER, lens, neon
-19	200-0609-00			15	COVER, neon
-20	407-0485-00			1	BRACKET, circuit board, top
	- - - - - -			-	mounting hardware: (not included w/bracket)
-21	210-0457-00			2	NUT, keps, 6-32 x 5/16 inch
	210-0458-00			2	NUT, keps, 8-32 x 11/32 inch
	212-0023-00			1	SCREW, 8-32 x 3/8 inch, PHS
-22	212-0070-00			1	SCREW, 8-32 x 5/16 inch, 100° csk, FHS

FIG. 1 EXPLODED (cont)

Fig. & Index No.	Tektronix Part No.	Serial/Model No. Eff	Serial/Model No. Disc	Qty	Description 1 2 3 4 5
1-23	407-0484-00			1	BRACKET, circuit board, bottom
	- - - - - -			-	mounting hardware: (not included w/bracket)
	210-0457-00			2	NUT, keps, 6-32 x 5/16 inch
	212-0040-00			1	SCREW, 8-32 x 3/8 inch, 100° csk, FHS
-24	386-1454-00			1	SUB-PANEL, front
-25	670-0286-00			1	ASSEMBLY, circuit board--LAMP DRIVER
	- - - - - -			-	assembly includes:
	388-1082-00			1	BOARD, circuit
-26	131-0633-00			10	TERMINAL, pin
-27	136-0220-00			3	SOCKET, transistor, 3 pin
-28	260-1007-00			1	SWITCH, push, 3 button
	166-0292-00	B010100	B019999	4	SLEEVE, support, plastic (not shown)
	361-0272-00	B020000		3	SPACER, plastic (not shown)
	- - - - - -			-	mounting hardware: (not included w/assembly)
-29	211-0008-00			2	SCREW, 4-40 x 1/4 inch, PHS
-30	220-0449-00			2	NUT, hex., sleeve, 4-40 x 1/2 inch long
-31	670-0287-00			1	ASSEMBLY, circuit board--CONTROL
	- - - - - -			-	assembly includes:
	388-1083-00			1	BOARD, circuit
-32	131-0566-00			2	LINK, terminal connecting
-33	131-0633-00			56	TERMINAL, pin
-34	136-0183-00			18	SOCKET, transistor, 3 pin
-35	136-0220-00			22	SOCKET, transistor, 3 pin
-36	136-0269-00			7	SOCKET, integrated circuit
-37	260-1006-00			1	SWITCH, push, 15 button
	166-0292-00	B010100	B019999	6	SLEEVE, support, plastic (not shown)
	361-0272-00	B020000		3	SPACER, plastic (not shown)
	- - - - - -			-	mounting hardware: (not included w/assembly)
-38	211-0601-00			6	SCREW, sems, 6-32 x 5/16 inch, PHB
-39	407-0296-06			1	BRACKET, angle, right front (Type R241 only)
	- - - - - -			-	mounting hardware: (not included w/bracket)
-40	212-0574-00			2	SCREW, 10-32 x 0.434 inch, 100° csk, FHS (Type R241 only)
-41	407-0296-00			1	BRACKET, angle, left front (Type R241 only)
	- - - - - -			-	mounting hardware: (not included w/bracket)
-42	212-0574-00			2	SCREW, 10-32 x 0.434 inch, 100° csk, FHS (Type R241 only)
-43	367-0076-00			2	HANDLE, carrying (Type R241 only)
	- - - - - -			-	mounting hardware for each: (not included w/handle)
-44	212-0559-00			2	SCREW, 10-32 x 5/8 inch, 100° csk, FHS (Type R241 only)
-45	124-0189-00			2	STRIP, trim (Type 241 only)
-46	426-0326-01			2	FRAME SECTION, right front & left rear
	- - - - - -			-	mounting hardware for each: (not included w/frame section)
-47	212-0574-00			1	SCREW, 10-32 x 0.434 inch, 100° csk, FHS

FIG. 1 EXPLODED (cont)

Fig. & Index No.	Tektronix Part No.	Serial/Model No. Eff	Serial/Model No. Disc	Qty	Description
1-48	377-0151-00			1	INSERT, corner, right front
	- - - - - -			-	mounting hardware: (not included w/insert)
-49	212-0507-00			2	SCREW, 10-32 x 3/8 inch, PHS
-50	426-0325-01			2	FRAME SECTION, left front & right rear
	- - - - - -			-	mounting hardware for each: (not included w/frame section)
-51	212-0574-00			1	SCREW, 10-32 x 0.434 inch, 100° csk, FHS
-52	377-0219-00			1	INSERT, corner, left front
	- - - - - -			-	mounting hardware: (not included w/insert)
	212-0507-00			2	SCREW, 10-32 x 3/8 inch, PHS
-53	386-1570-00			1	PLATE, spacer
-54	214-1065-00			1	LATCH, lever
	- - - - - -			-	mounting hardware for each: (not included w/latch)
-55	212-0008-00			3	SCREW, 8-32 x 1/2 inch, PHS
-56	214-1065-00			1	LATCH, lever
	- - - - - -			-	mounting hardware: (not included w/latch)
-57	212-0023-00			3	SCREW, 8-32 x 3/8 inch, PHS
-58	426-0436-00			1	FRAME SECTION, front center
	- - - - - -			-	mounting hardware: (not included w/frame section)
-59	212-0023-00			1	SCREW, 8-32 x 3/8 inch, PHS
-60	426-0433-00			1	FRAME SECTION, bottom front
-61	426-0432-00			1	FRAME SECTION, top front
	- - - - - -			-	mounting hardware: (not included w/frame section)
-62	212-0574-00			4	SCREW, 10-32 x 0.434 inch, 100° csk, FHS
-63	212-0070-00			1	SCREW, 8-32 x 5/16 inch, 100°csk, FHS
-64	407-0486-00			1	BRACKET, guide, circuit board, right
	- - - - - -			-	mounting hardware: (not included w/bracket)
-65	212-0070-00			2	SCREW, 8-32 x 5/16 inch, 100° csk, FHS
	210-0458-00			2	NUT, keps, 8-32 x 11/32 inch
-66	407-0487-00			1	BRACKET, guide, circuit board, left
-67	351-0087-00			32	GUIDE, circuit board, white
-68	351-0087-01			30	GUIDE, circuit board, black

FIG. 1 EXPLODED (cont)

Fig. & Index No.	Tektronix Part No.	Serial/Model No. Eff	Serial/Model No. Disc	Qty	1 2 3 4 5	Description
1-	670-0288-00			1		ASSEMBLY, circuit board, inter-connecting
	- - - - - -			-		assembly includes:
-69	388-1084-00			1		BOARD, circuit
-70	131-0626-00			30		CONNECTOR, receptacle, 80 contact, female
-71	131-0633-00			15		TERMINAL, pin
-72	407-0499-00			1		BRACKET, connector, right
-73	407-0483-00			1		BRACKET, connector, left
-74	343-0177-00			1		RETAINER, connector
-75	129-0183-00			6		POST, metal, hex., 0.781 inch long
-76	211-0014-00			6		SCREW, 4-40 x 1/2 inch, PHS
-77	211-0012-00			54		SCREW, 4-40 x 3/8 inch, PHS
	- - - - - -			-		mounting hardware: (not included w/assembly)
-78	212-0004-00			12		SCREW, 8-32 x 5/16 inch, PHS
-79	211-0012-00			6		SCREW, 4-40 x 3/8 inch, PHS
-80	352-0042-00			2		HOLDER, plug-in chassis
	- - - - - -			-		mounting hardware for each: (not included w/holder)
	211-0012-00			1		SCREW, 4-40 x 3/8 inch, PHS
	210-0994-00			1		WASHER, flat, #4
-81	210-0586-00			1		NUT, keps, 4-40 x 1/4 inch
-82	386-1455-00			1		BRACKET, support
-83	426-0434-00			1		FRAME SECTION, top left
	- - - - - -			-		mounting hardware: (not included w/frame section)
-84	212-0574-00			2		SCREW, 10-32 x 0.434 inch, 100° csk, FHS
-85	212-0023-00			1		SCREW, 8-32 x 3/8 inch, PHS
-86	210-0458-00			1		NUT, keps, 8-32 x 11/32 inch
-87	212-0004-00			2		SCREW, 8-32 x 5/16 inch, PHS
-88	426-0434-00			1		FRAME SECTION, top right
	- - - - - -			-		mounting hardware: (not included w/frame section)
-89	212-0574-00			2		SCREW, 10-32 x 0.434 inch, 100° csk, FHS
-90	212-0023-00			1		SCREW, 8-32 x 3/8 inch, PHS
	210-0458-00			1		NUT, keps, 8-32 x 11/32 inch
-91	407-0491-00			1		BRACKET, support, right
	- - - - - -			-		mounting hardware: (not included w/bracket)
-92	211-0507-00			4		SCREW, 6-32 x 5/16 inch, PHS
-93	210-0202-00			1		LUG, solder, SE #6
-94	407-0490-00			1		BRACKET, support, left
	- - - - - -			-		mounting hardware: (not included w/bracket)
-95	211-0507-00			4		SCREW, 6-32 x 5/16 inch, PHS

FIG. 1 EXPLODED (cont)

Fig. & Index No.	Tektronix Part No.	Serial/Model No. Eff	Serial/Model No. Disc	Qty	Description
1-96	343-0042-00			1	CLAMP, cable, plastic, half
	- - - - - -			-	mounting hardware for each: (not included w/clamp)
-97	211-0507-00			1	SCREW, 6-32 x 5/16 inch, PHS
	210-0863-00			1	WASHER, D shape, 0.191 ID x 33/64 x 33/64 inch long
-98	210-0457-00			1	NUT, keps, 6-32 x 5/16 inch
-99	343-0004-00			1	CLAMP, cable, plastic
	- - - - - -			-	mounting hardware: (not included w/clamp)
	211-0559-00			1	SCREW, 6-32 x 3/8 inch, 100° csk, FHS
	210-0863-00			1	WASHER, D shape, 0.191 ID x 33/64 x 33/64 inch long
-100	210-0457-00			1	NUT, keps, 6-32 x 5/16 inch
-101	358-0215-00			1	BUSHING, plastic
	630-0230-00			2	ASSEMBLY, connector
	- - - - - -			-	each assembly includes:
-102	386-1141-00			1	PLATE, connector mounting
-103	131-0294-06			1	CONNECTOR, 36 pin, female
	- - - - - -			-	mounting hardware: (not included w/connector)
-104	211-0062-00			2	SCREW, 2-56 x 5/16 inch, RHS
	210-0001-00			2	LOCKWASHER, internal, #2
-105	210-0405-00			2	NUT, hex., 2-56 x 3/16 inch
	- - - - - -			-	mounting hardware for each: (not included w/assembly)
-106	211-0507-00			2	SCREW, 6-32 x 5/16 inch, PHS
	630-0231-00			1	ASSEMBLY, connector
	- - - - - -			-	assembly includes:
-107	386-1244-00			1	PLATE, connector mounting
-108	131-0294-05			1	CONNECTOR, 36 pin, female
	- - - - - -			-	mounting hardware: (not included w/connector)
	211-0062-00			2	SCREW, 2-56 x 5/16 inch, RHS
	210-0001-00			2	LOCKWASHER, internal, #2
	210-0405-00			2	NUT, hex., 2-56 x 3/16 inch
-109	131-0294-06			3	CONNECTOR, 36 pin, female
	- - - - - -			-	mounting hardware for each: (not included w/connector)
-110	211-0062-00			2	SCREW, 2-56 x 5/16 inch, RHS
	210-0001-00			2	LOCKWASHER, internal, #2
-111	210-0405-00			2	NUT, hex., 2-56 x 3/16 inch
	- - - - - -			-	mounting hardware: (not included w/assembly)
-112	211-0507-00			4	SCREW, 6-32 x 5/16 inch, PHS

FIG. 1 EXPLODED (cont)

Fig. & Index No.	Tektronix Part No.	Serial/Model No. Eff	Serial/Model No. Disc	Qty	1 2 3 4 5	Description
1-	630-0232-00			1		ASSEMBLY, connector
	- - - - - -			-		assembly includes:
-113	386-1141-00			1		PLATE, connector mounting
-114	131-0294-04			1		CONNECTOR, 36 pin, female
	- - - - - -			-		mounting hardware: (not included w/connector)
-115	211-0062-00			2		SCREW, 2-56 x 5/16 inch, RHS
	210-0001-00			2		LOCKWASHER, internal, #2
-116	210-0405-00			2		NUT, hex., 2-56 x 3/16 inch
	- - - - - -			-		mounting hardware: (not included w/assembly)
-117	211-0507-00			2		SCREW, 6-32 x 5/16 inch, PHS
-118	386-1456-00			1		PANEL, rear
	- - - - - -			-		mounting hardware: (not included w/panel)
-119	212-0507-00			4		SCREW, 10-32 x 3/8 inch, PHS
-120	426-0330-00			1		FRAME SECTION, rear top
	- - - - - -			-		mounting hardware: (not included w/frame section)
-121	212-0574-00			4		SCREW, 10-32 x 0.434 inch, 100° csk, FHS
-122	212-0023-00			5		SCREW, 8-32 x 3/8 inch, PHS
-123	210-0458-00			5		NUT, keps, 8-32 x 11/32 inch
-124	426-0329-00			1		FRAME SECTION, rear bottom
	- - - - - -			-		mounting hardware: (not included w/frame section)
	212-0023-00			5		SCREW, 8-32 x 3/8 inch, PHS
	210-0458-00			5		NUT, keps, 8-32 x 11/32 inch
-125	124-0201-00			2		STRIP, trim
-126	124-0188-00			2		STRIP, trim (Type R241 only)
-127	348-0095-01			2		FLIPSTAND, cabinet (Type 241 only)
-128	214-0846-01			2		RETAINER, flipstand (Type 241 only)
	- - - - - -			-		mounting hardware for each: (not included w/retainer)
-129	212-0541-00			1		SCREW, 10-32 x 5/8 inch, RHS (Type 241 only)
-130	348-0098-01			2		FOOT, cabinet, left front, right rear (Type 241 only)
	- - - - - -			-		mounting hardware for each: (not included w/foot)
-131	212-0541-00			1		SCREW, 10-32 x 5/8 inch, RHS (Type 241 only)
-132	348-0096-01			2		FOOT, cabinet right front, left rear (Type 241 only)
	- - - - - -			-		mounting hardware for each: (not included w/foot)
-133	212-0541-00			1		SCREW, 10-32 x 5/8 inch, RHS (Type 241 only)
-134	348-0097-00			4		PAD, cabinet foot (Type 241 only)
-135	367-0073-00			2		HANDLE (Type 241 only)
	- - - - - -			-		mounting hardware for each: (not included w/handle)
-136	213-0155-00			4		SCREW, machine, 10-32 x 0.40 inch (Type 241 only)
-137	386-1352-00			2		PLATE (Type 241 only)

FIG. 1 EXPLODED (cont)

Fig. & Index No.	Tektronix Part No.	Serial/Model No. Eff	Serial/Model No. Disc	Qty	1 2 3 4 5	Description
1-138	200-0728-00			4		COVER, handle end (Type 241 only)
-139	426-0437-00			1		FRAME SECTION, side, right bottom
	- - - - - -			-		mounting hardware: (not included w/frame section)
-140	212-0574-00			3		SCREW, 10-32 x 0.434 inch, 100° csk, FHS
-141	220-0410-00			1		NUT, keps, 10-32 x 3/8 inch
-142	212-0585-00			2		SCREW, 10-32 x 1/2 inch, OHS
-143	212-0040-00			1		SCREW, 8-32 x 3/8 inch, 100° csk, FHS
	210-0458-00			1		NUT, keps, 8-32 x 11/32 inch
-144	426-0435-00			1		FRAME SECTION, side, left bottom
	- - - - - -			-		mounting hardware: (not included w/frame section)
-145	212-0574-00			3		SCREW, 10-32 x 0.434 inch, 100° csk, FHS
	220-0410-00			1		NUT, keps, 10-32 x 3/8 inch
-146	212-0070-00			3		SCREW, 8-32 x 5/16 inch, 100° csk, FHS
-147	212-0585-00			2		SCREW, 10-32 x 1/2 inch, OHS
-148	351-0082-00			1		TRACK, slideout (pair), (Type R241 only)
-149	179-1307-00			1		CABLE HARNESS
	- - - - - -			-		cable harness includes:
-150	131-0371-00			81		CONNECTOR, terminal
-151	131-0621-00	B010100	B019999	159		CONNECTOR, terminal
	131-0707-00	B020000		159		CONNECTOR, terminal
-152	348-0079-00	B010100	B029999X	4		CAP, foot, plastic
-153	348-0078-00	B010100	B029999	4		FOOT, plastic
	348-0191-00	B039999		4		FOOT, plastic
	- - - - - -			-		mounting hardware for each: (not included w/foot)
-154	212-0082-00			1		SCREW, 8-32 x 1 1/4 inches, PHS

FIG 2 STORAGE TRAY & CABINET

Fig. & Index No.	Tektronix Part No.	Serial/Model No. Eff	Serial/Model No. Disc	Qty	Description
2-	436-0088-00			1	ASSEMBLY, storage tray
	- - - - - -			-	assembly includes:
-1	436-0087-00			1	TRAY, storage
-2	200-0898-00			1	COVER, storage tray
-3	214-1082-00			2	PIN, guide
	- - - - - -			-	mounting hardware for each: (not included w/pin)
-4	211-0007-00			1	SCREW, 4-40 x 3/16 inch, PHS
	334-1338-00			1	LABEL (not shown)
-5	367-0103-00			2	PULL, plastic
	- - - - - -			-	mounting hardware for each: (not included w/pull)
-6	210-0750-00			1	RIVET, plastic
-7	426-0441-00			1	FRAME, storage tray
-8	105-0079-00			2	STOP, storage tray
	- - - - - -			-	mounting hardware for each: (not included w/stop)
-9	211-0008-00			1	SCREW, 4-40 x 1/4 inch, PHS
-10	386-1139-00			1	CABINET, top
	- - - - - -			-	cabinet includes:
	214-0812-00			4	ASSEMBLY, latch
	- - - - - -			-	each assembly includes:
-11	214-0603-01			1	PIN, securing
-12	214-0604-00			1	SPRING
-13	386-0227-00			1	PLATE, index, plastic
-14	386-0226-00			1	PLATE, locking
-15	386-1138-00			1	CABINET, bottom
	- - - - - -			-	cabinet includes:
	214-0812-00			4	ASSEMBLY, latch
	- - - - - -			-	each assembly includes:
-16	214-0603-01			1	PIN, securing
-17	214-0604-00			1	SPRING
-18	386-0227-00			1	PLATE, index, plastic
-19	386-0226-00			1	PLATE, locking

SECTION 8 DIAGRAMS

Reference standards for the diagrams are Graphic Symbols standards USAS Y32.2-1967 and ASA Y32.14-1966. The following special symbols are also used.

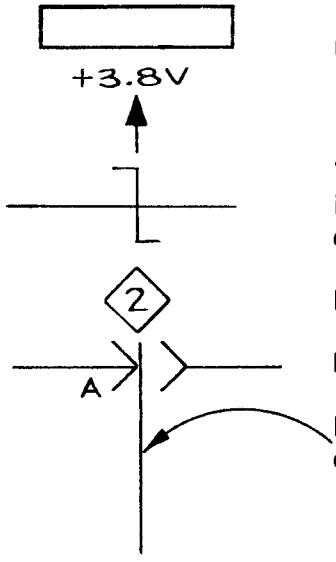

Identification of front-panel control or connector

Connection and voltage source

Transition symbol across clock pulse input indicates input is sensitive to negative-going edge

Diagram identification number

Pin connection to circuit board

Blue line encloses components located on circuit board or card

VOLTAGE CONDITIONS

Circuit voltages shown in blue on the diagrams are not absolute and may vary between instruments.

Voltages were measured with respect to chassis ground, using an infinite-resistance DC digital voltmeter.

Voltages were obtained with the Type 241 connected to a Type 230 Digital Unit and Type 568 Oscilloscope with a Type 3S5 Programmable Sampling Unit and a Type 3T5 Programmable Sampling Sweep Unit. All program cards were removed from the Type 241.

Control settings for the voltage measurements were as follows:

Type 241

Test Mode	Automatic Sequence
All Pushbuttons	Released
Ready Lamp	Illuminated (Instrument in Ready state)

Type 568 Plug-In Units

Type 3S5 Mode	Ext Prog
Vertical Input	None
Type 3T5 Program Selector	Ext
Triggering	Free-running trace

Type 230 Digital Unit

Measurement Mode	Ext Prog
Triggered Measurement	On
Within Limits (Green) Lamp	Illuminated

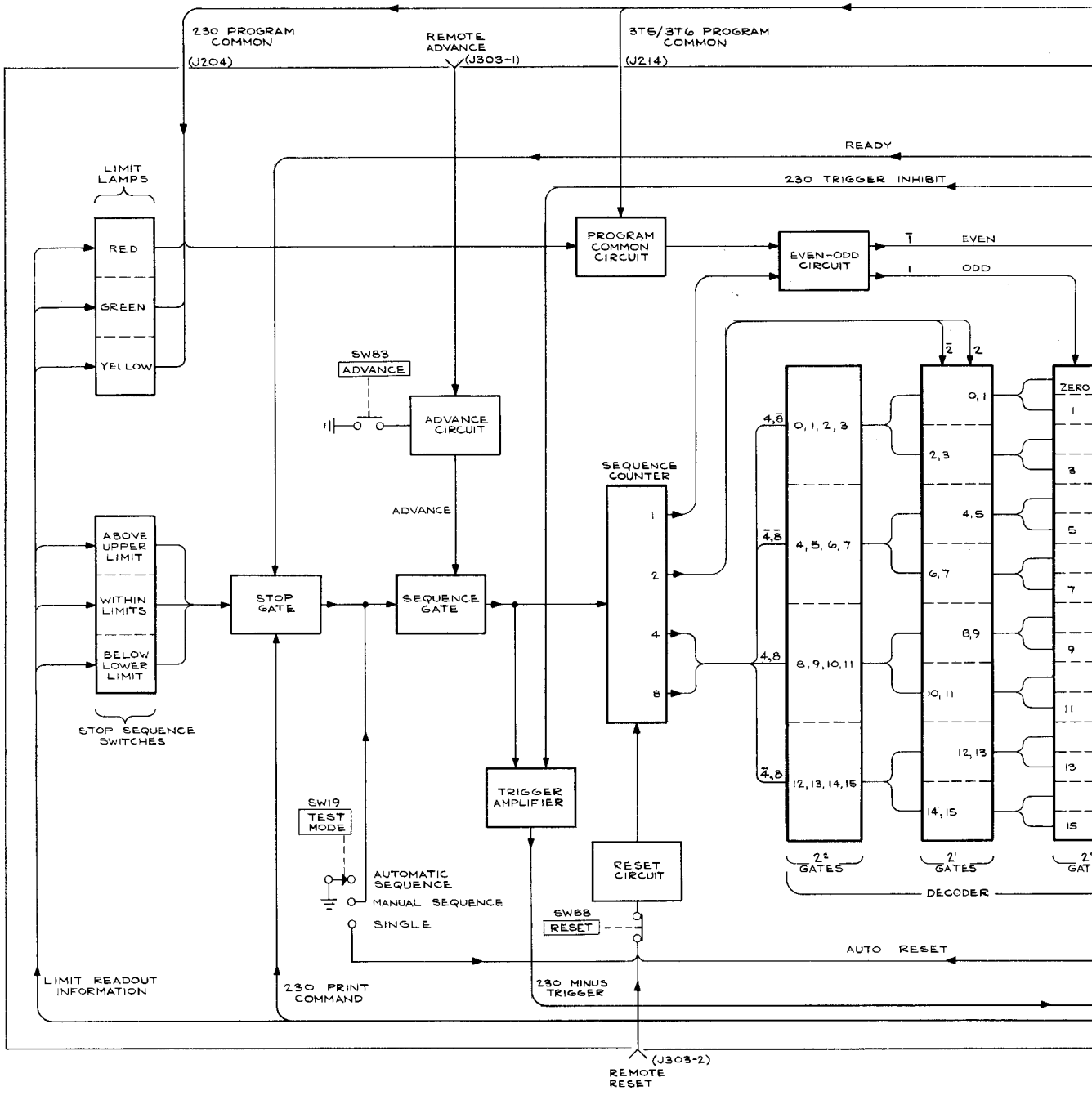

TYPE 241/R241

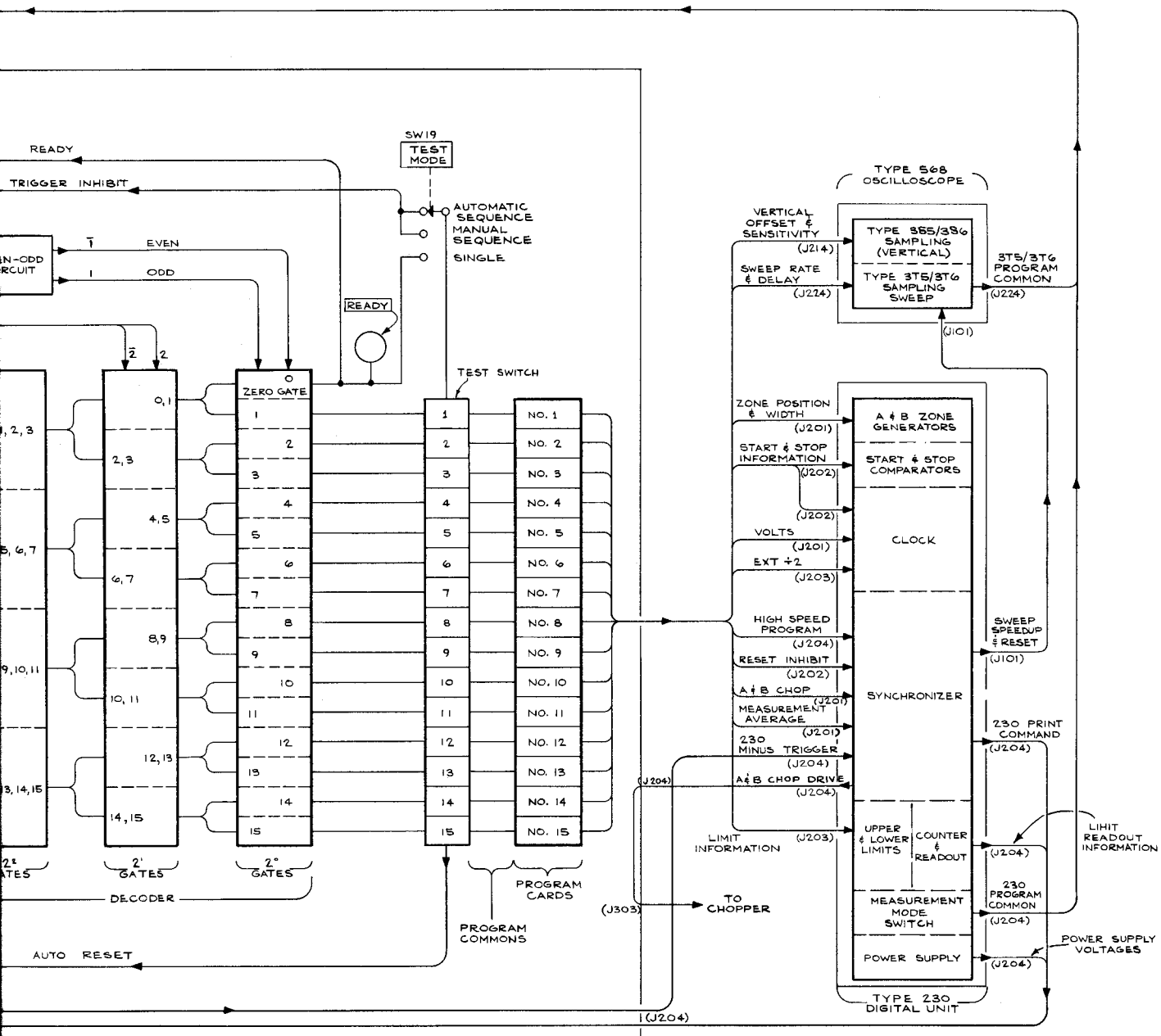

BLOCK DIAGRAM

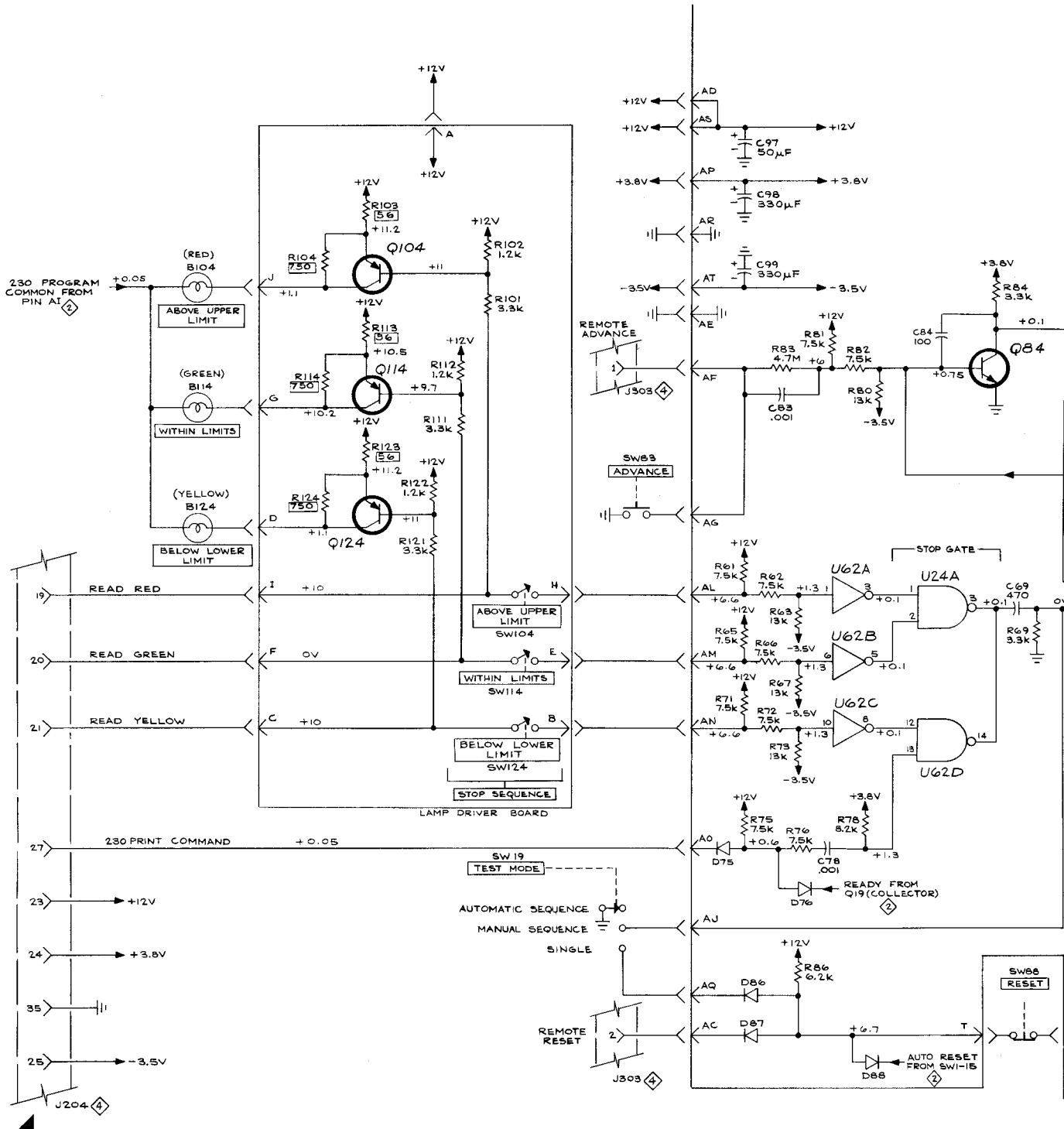

VOLTAGES were obtained under conditions given on left page of this diagram.

TYPE 241/R241

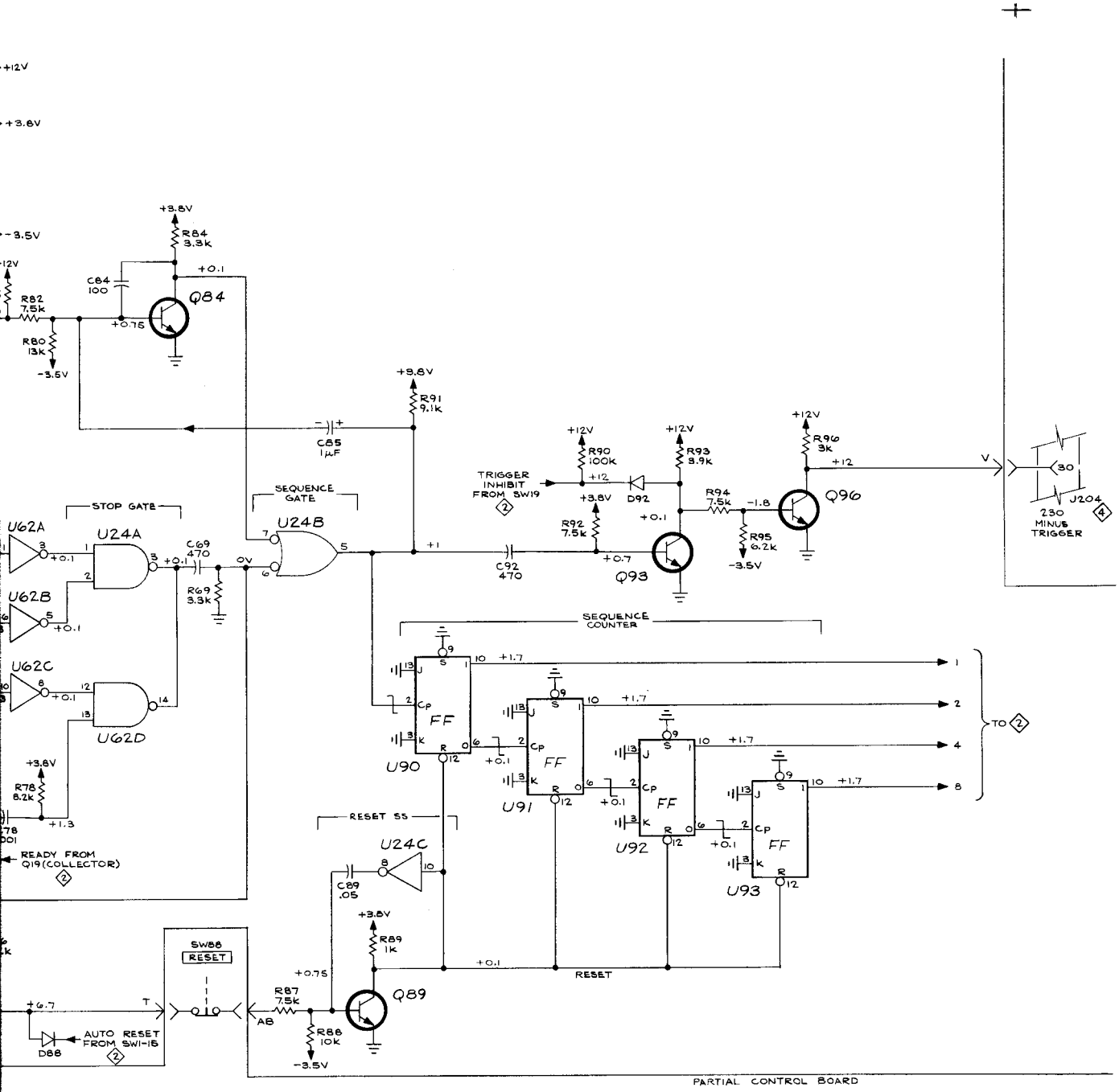

SEE PARTS LIST FOR EARLIER VALUES AND SERIAL NUMBER RANGES OF PARTS MARKED WITH BLUE OUTLINE.

REFERENCE DIAGRAM

(2) DECODER

(4) RIGHT INTERCONNECTING DIAGRAM

SEE PARTS LIST FOR SEMICONDUCTOR TYPES

869

COUNTER (1)

(B)

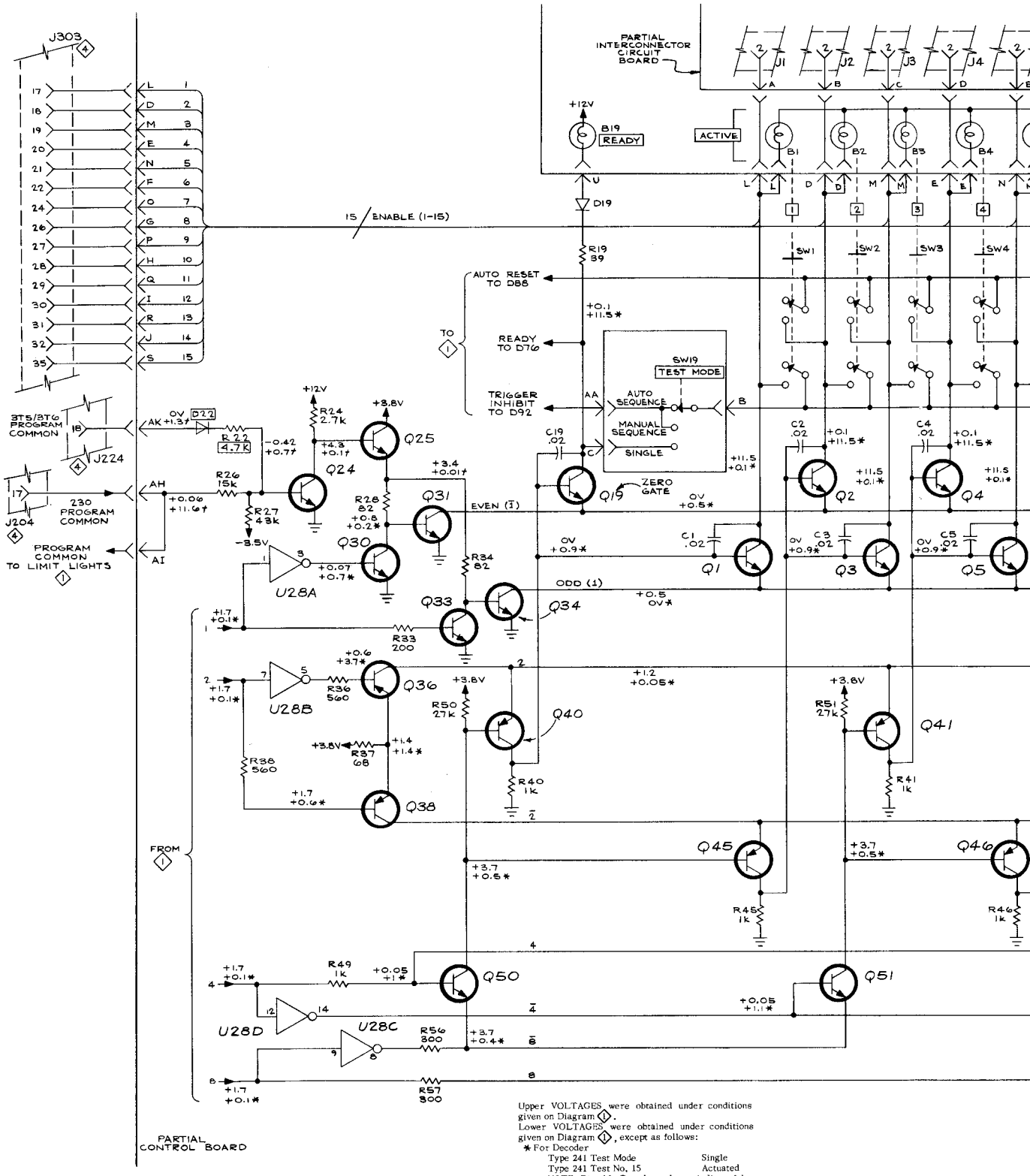

Upper VOLTAGES were obtained under conditions given on Diagram 1.
Lower VOLTAGES were obtained under conditions given on Diagram 1, except as follows:

* For Decoder

Type 241 Test Mode	Single
Type 241 Test No. 15	Actuated

NOTE: Bistable Decoder voltages indicate false and true levels for each gate.

† For Program Common Circuit

Type 230 Measurement Mode	Time
Type 3T5/3T6 Program Selector	Int

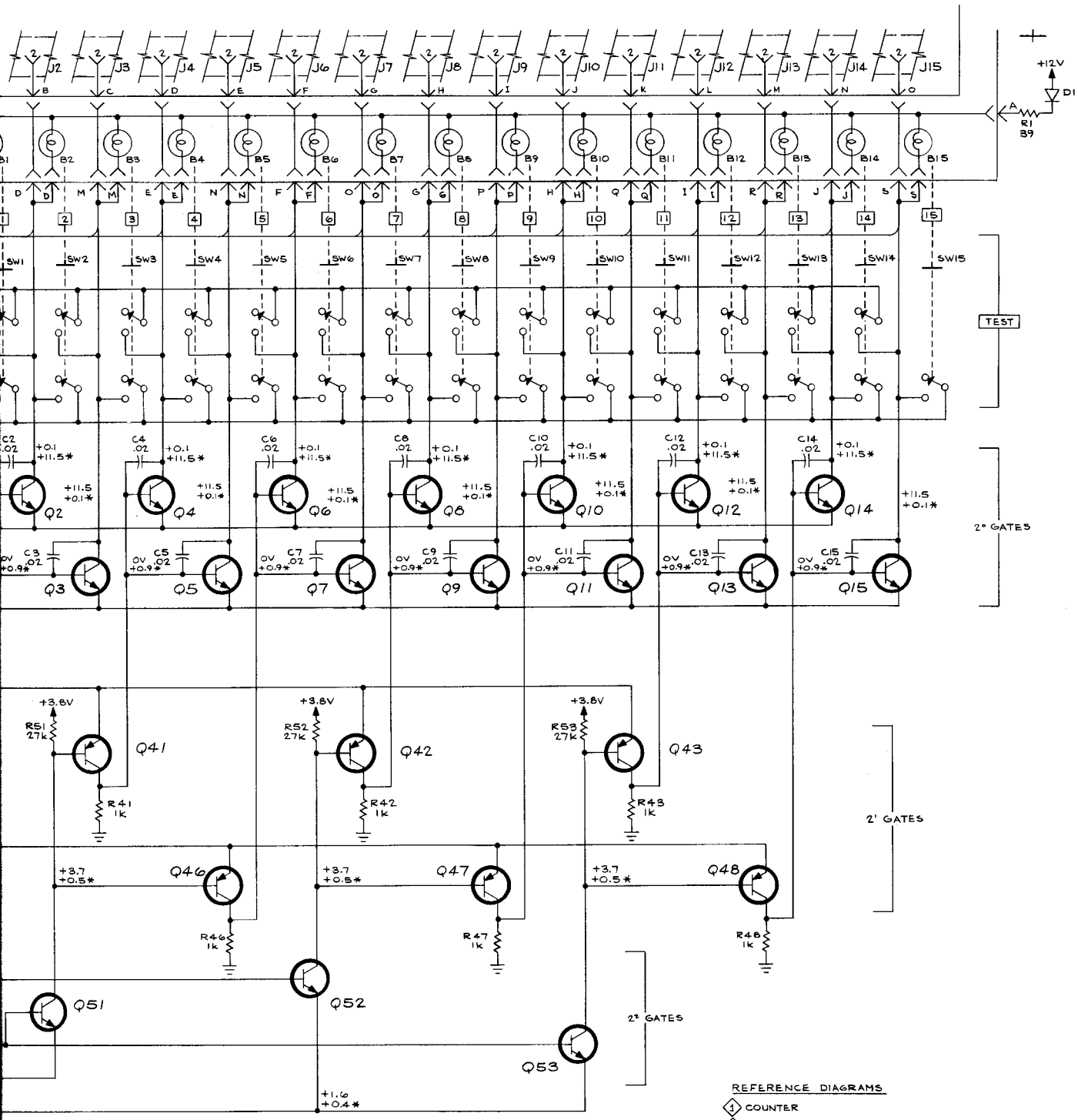

SEE PARTS LIST FOR EARLIER VALUES AND SERIAL NUMBER RANGES OF PARTS MARKED WITH BLUE OUTLINE.

REFERENCE DIAGRAMS

1 COUNTER

4 RIGHT INTERCONNECTING DIAGRAM

SEE PARTS LIST FOR SEMICONDUCTOR TYPES

869

DECODER 2

TYPE 241/R241

(A)

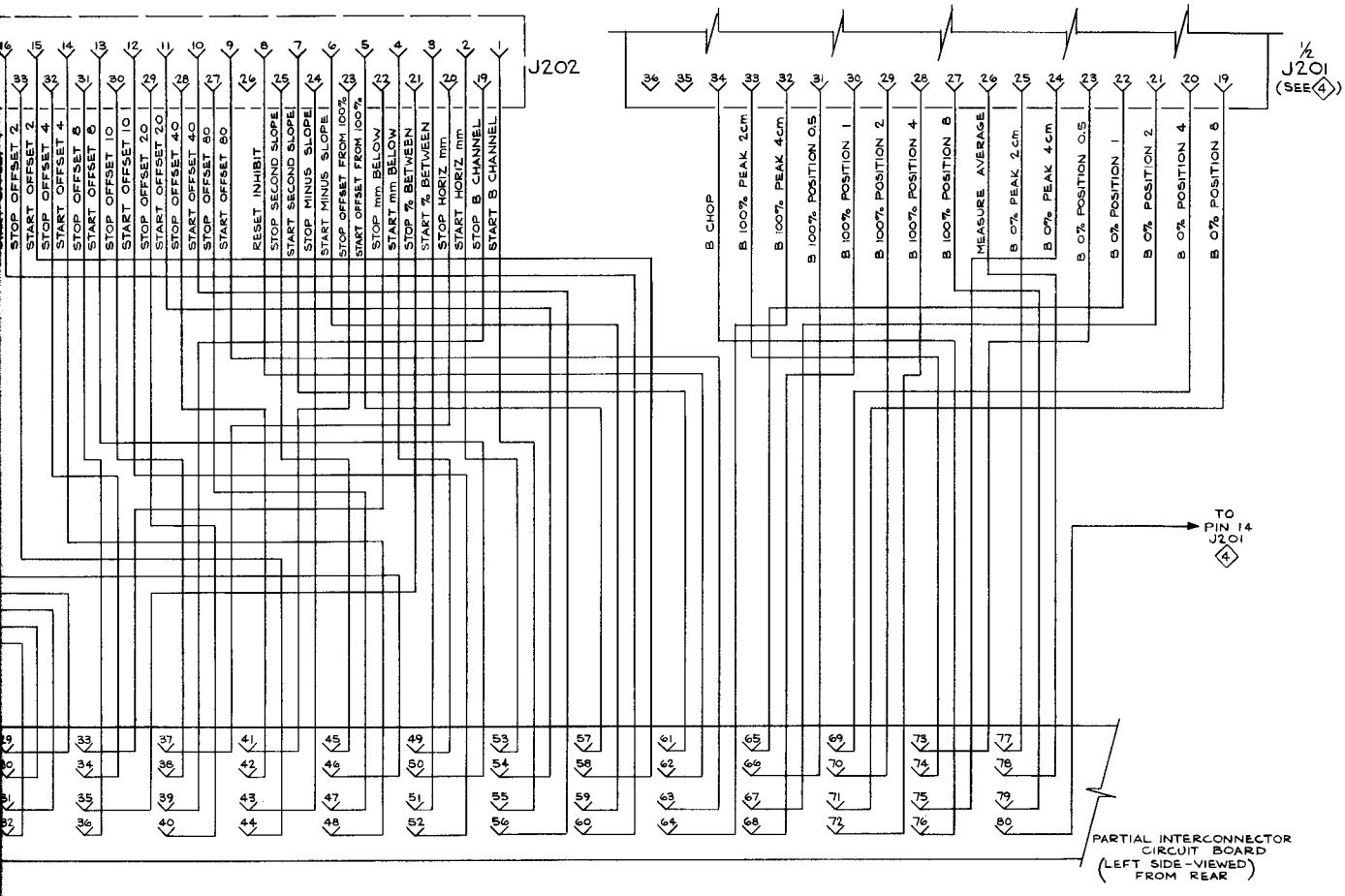

Ⓐ

LEFT INTERCONNECTING DIAGRAM (3)

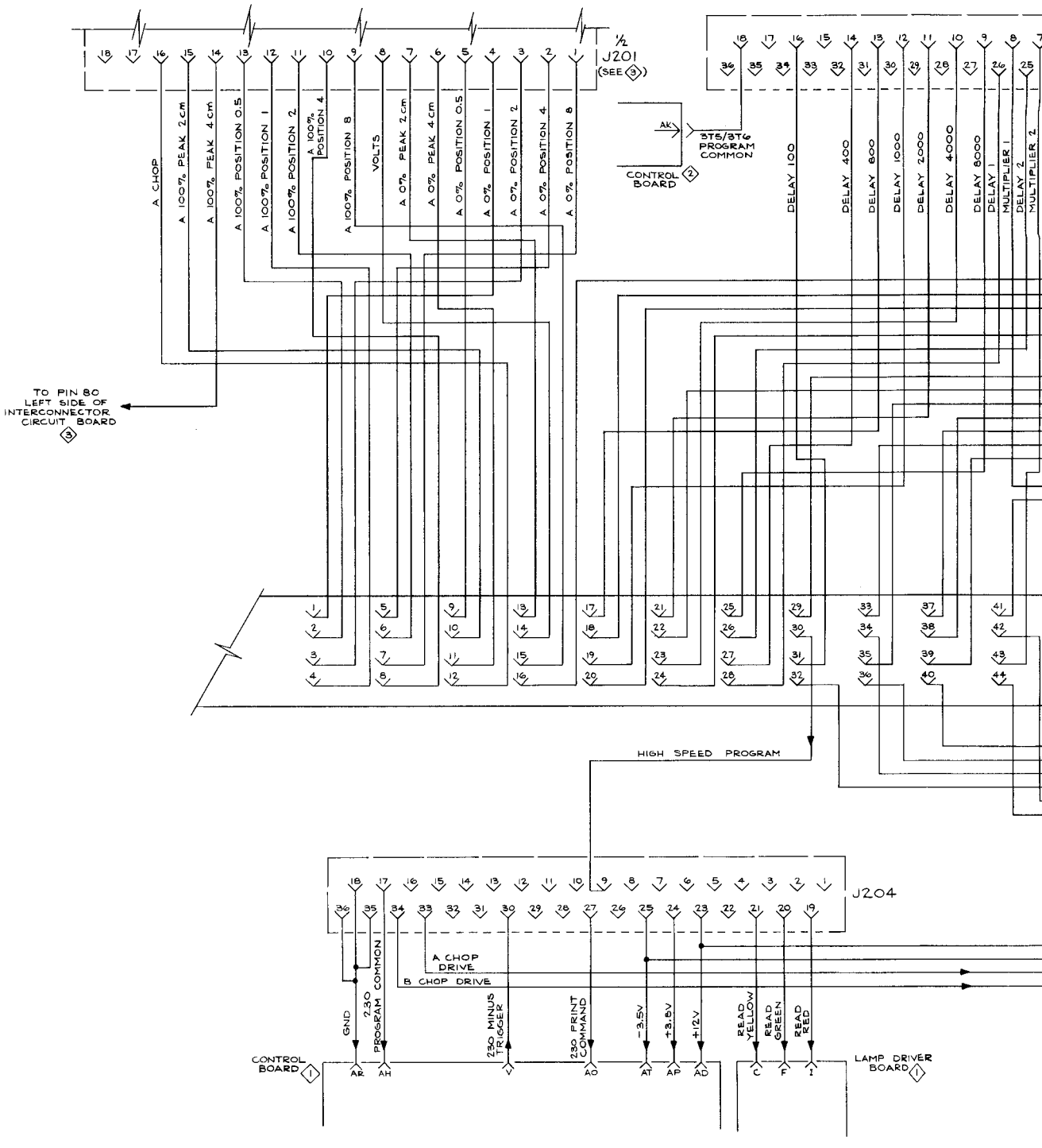

TYPE 241/R241

A

Ⓐ RIGHT INTERCONNECTING DIAGRAM 4

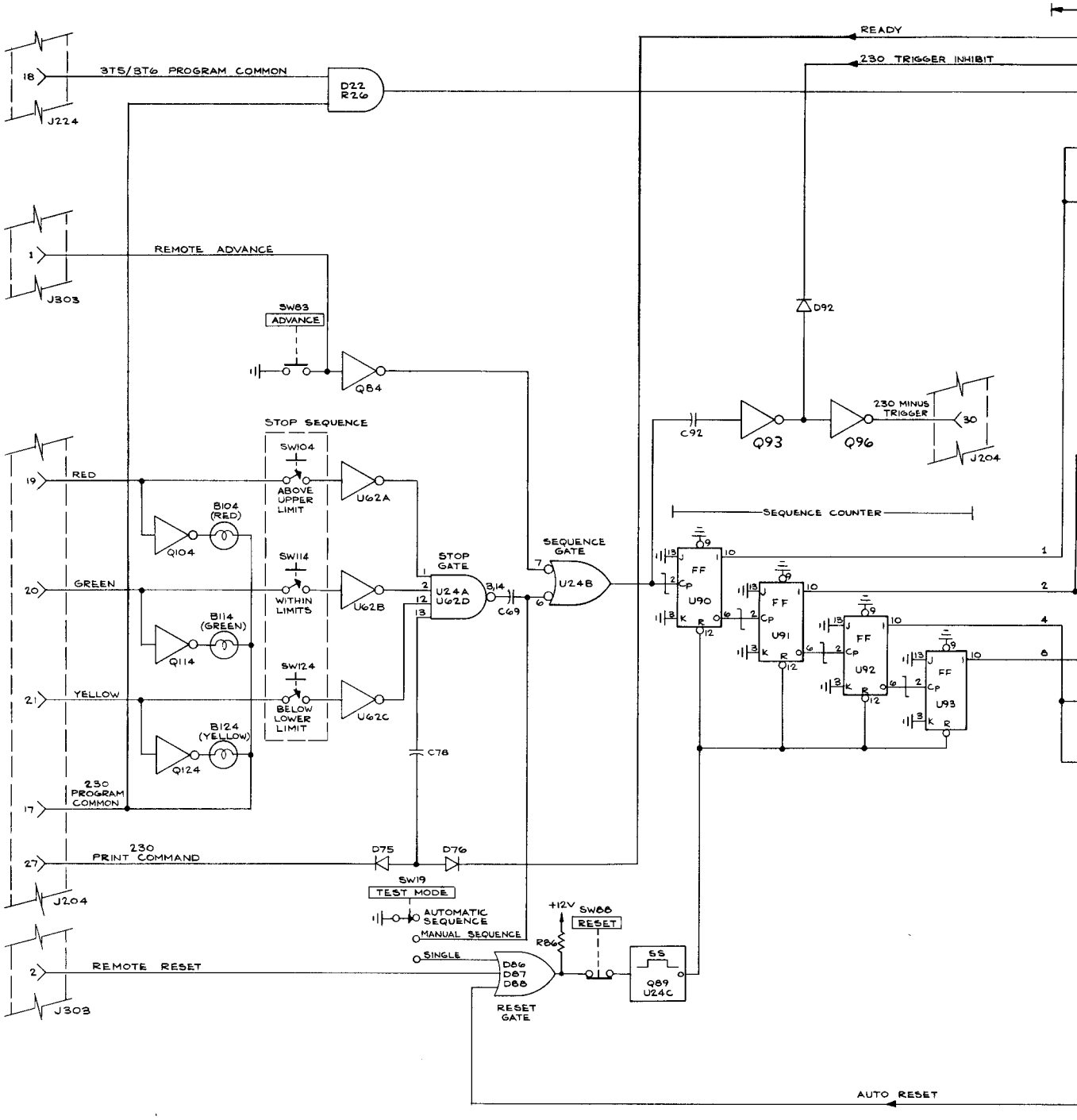
READY
230 TRIGGER INHIBIT
18
3T5/3T6 PROGRAM COMMON
D22
R26
J224
1
REMOTE ADVANCE
J303
SW83
ADVANCE
Q84
D92
C92
Q93
Q96
230 MINUS TRIGGER
30
J204
STOP SEQUENCE
SW104
19
RED
ABOVE UPPER LIMIT
U62A
B104 (RED)
Q104
SEQUENCE COUNTER
SEQUENCE GATE
STOP GATE
SW114
20
GREEN
WITHIN LIMITS
U62B
U24A U62D
U24B
C69
B114 (GREEN)
Q114
FF
U90
U91
U92
U93
SW124
21
YELLOW
BELOW LOWER LIMIT
U62C
B124 (YELLOW)
Q124
C78
230 PROGRAM COMMON
17
27
230 PRINT COMMAND
D75
D76
SW19
TEST MODE
AUTOMATIC SEQUENCE
MANUAL SEQUENCE
SINGLE
+12V
SW88
RESET
R86
2
REMOTE RESET
D86
D87
D88
RESET GATE
5S
Q89
U24C
AUTO RESET

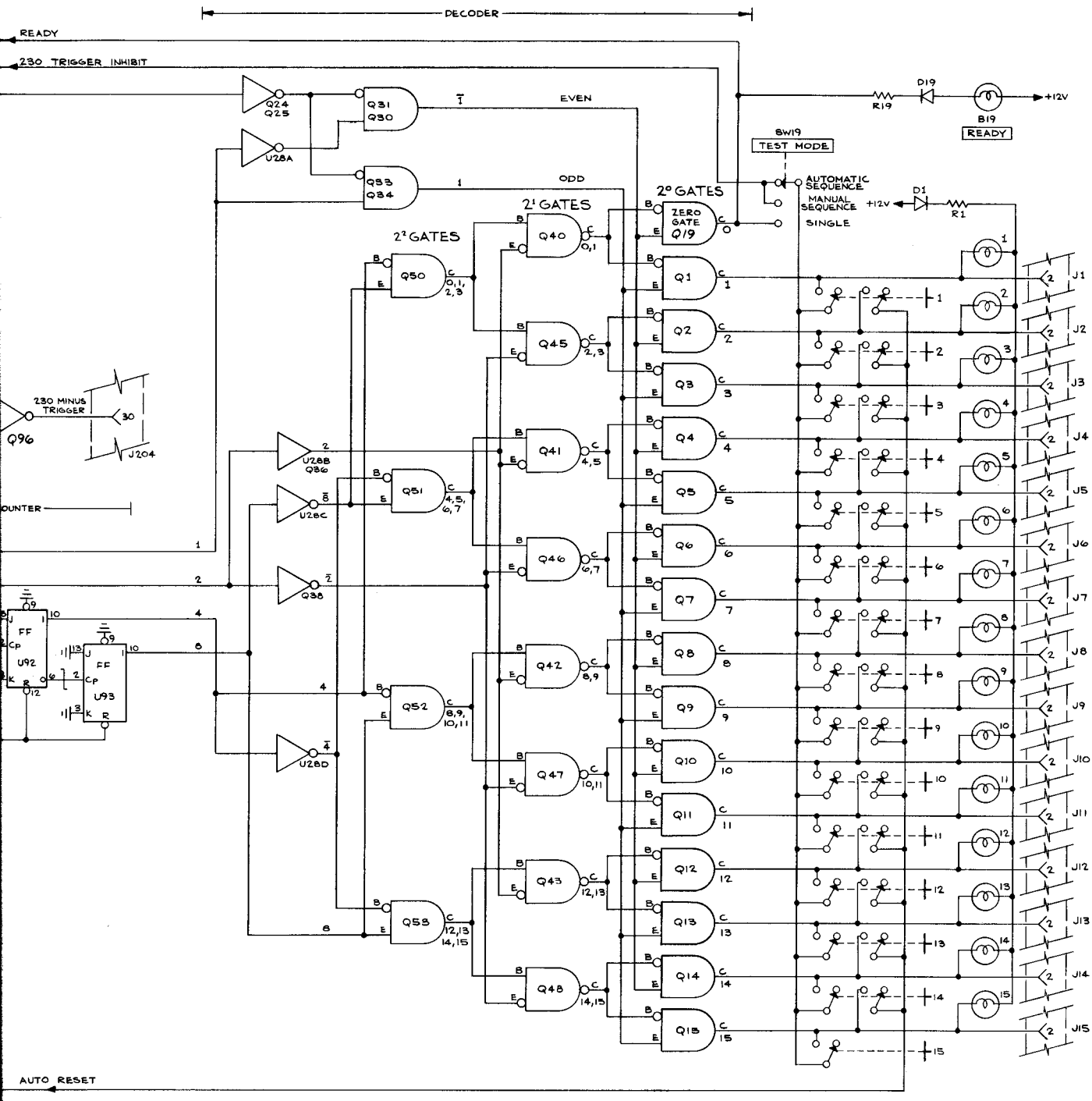

Ⓐ

LOGIC DIAGRAM 169 5

FIG. 1 EXPLODED

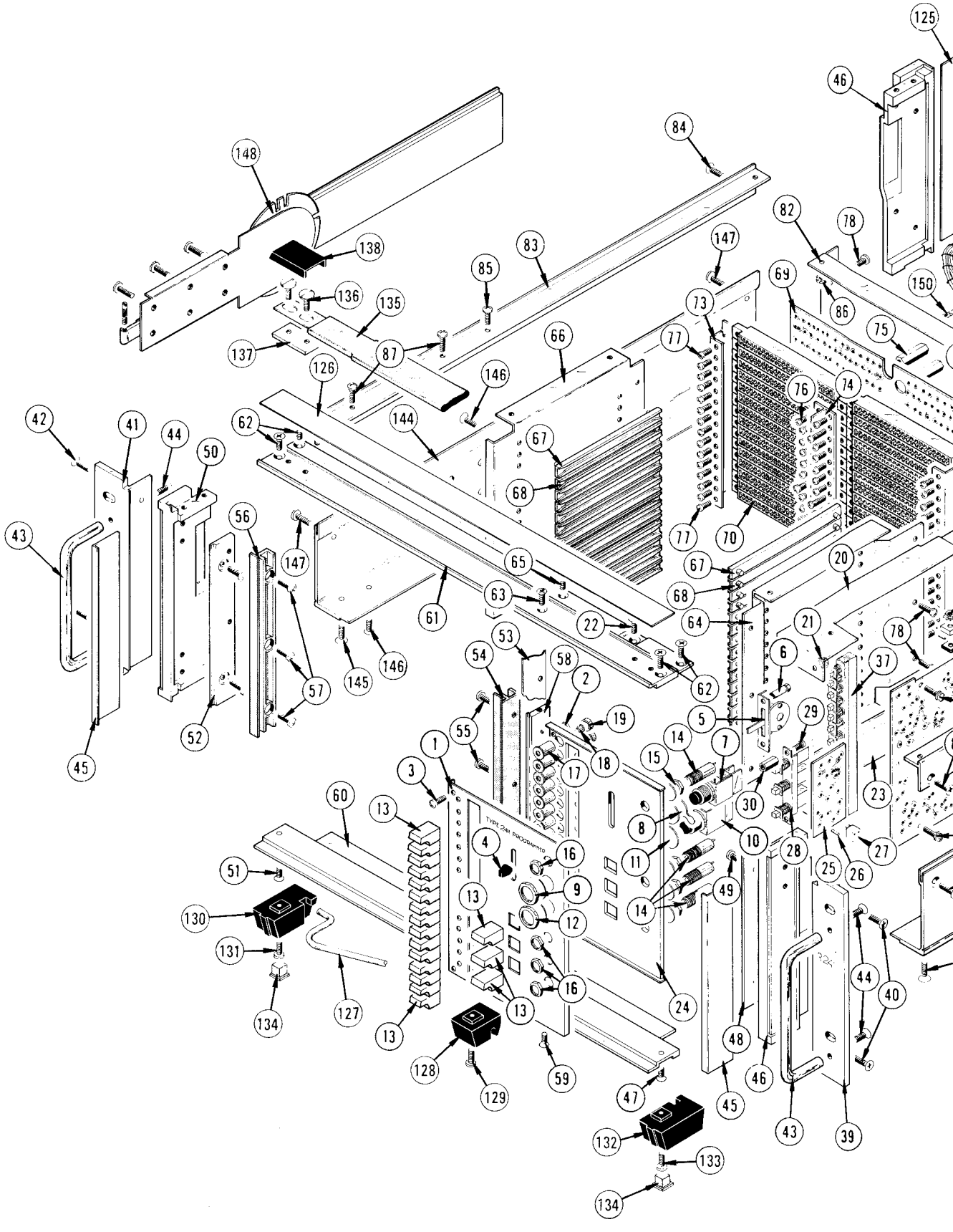

A

FIG. 1 EXPLODED

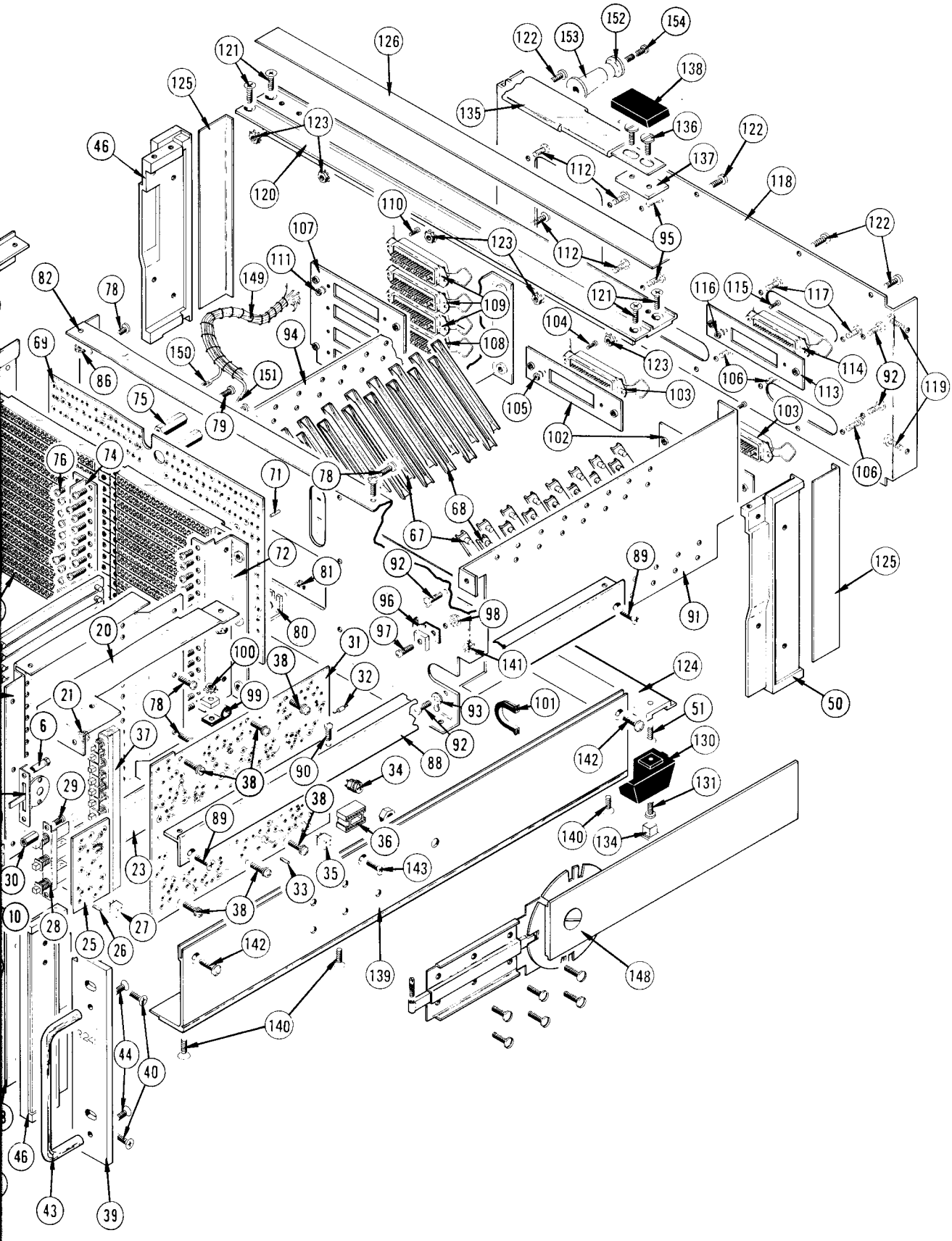

FIG. 2 STORAGE TRAY & CA

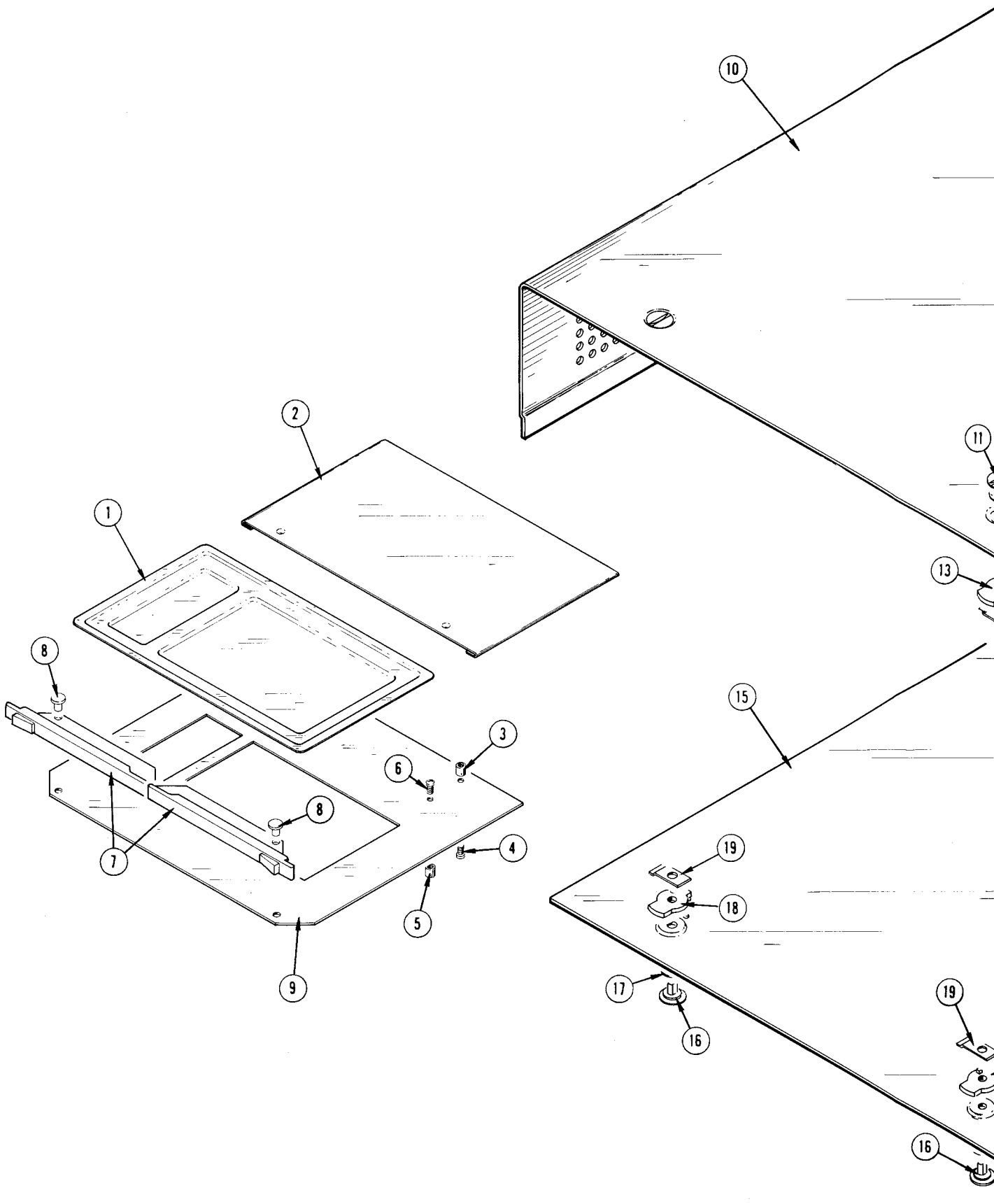

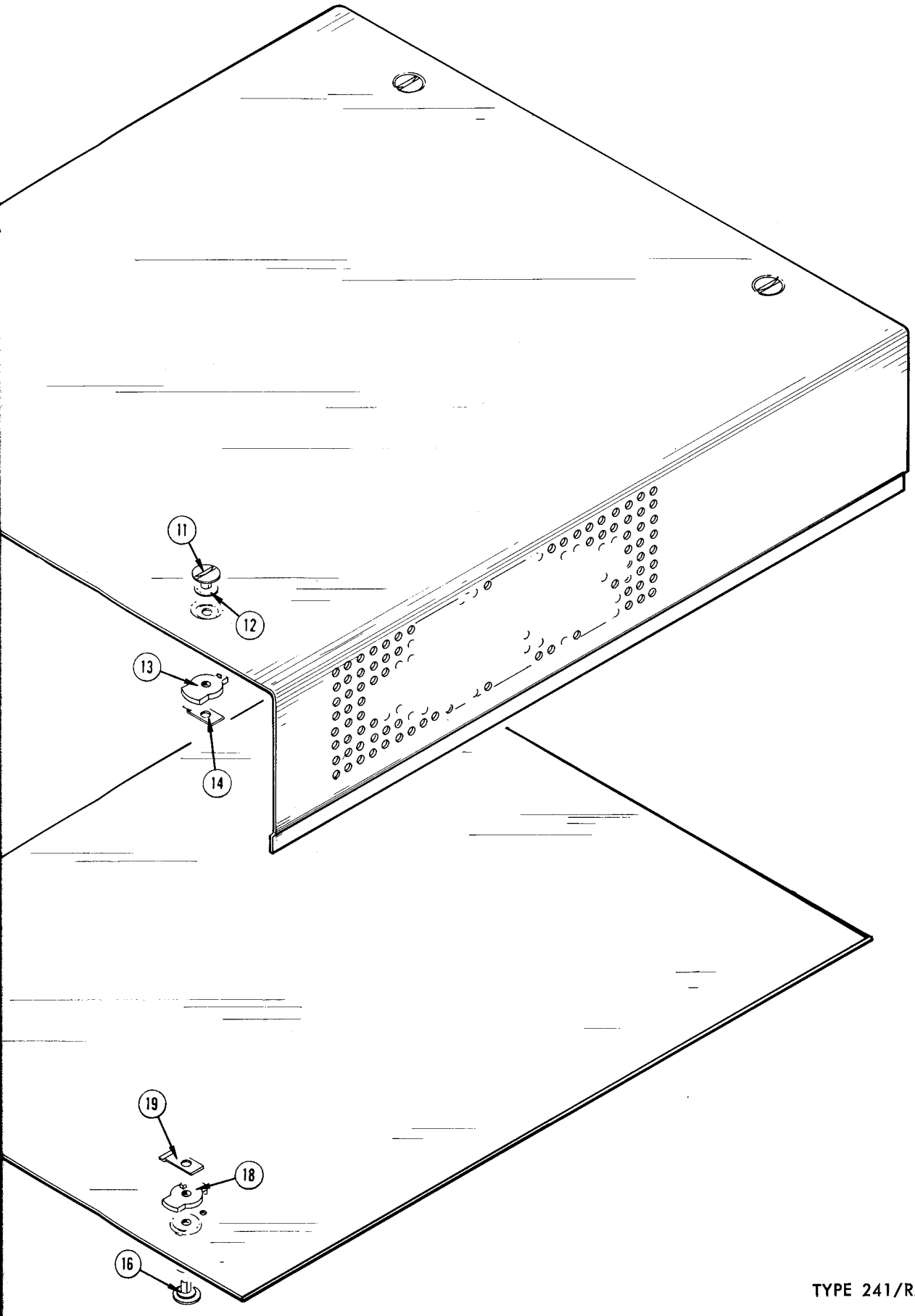
11
12
13
14
19
18
16

OPTIONAL ACCESSORIES (not shown)

Fig. & Index No.	Tektronix Part No.	Serial/Model No. Eff	Serial/Model No. Disc	Qty	1 2 3 4 5	Description
	012-0132-00			1		CABLE, interconnecting, 8 feet long (unfinished end)
	- - - - - -			-		(connects to J303)

(A)1

FIG. 3 STANDARD ACCESSORIES

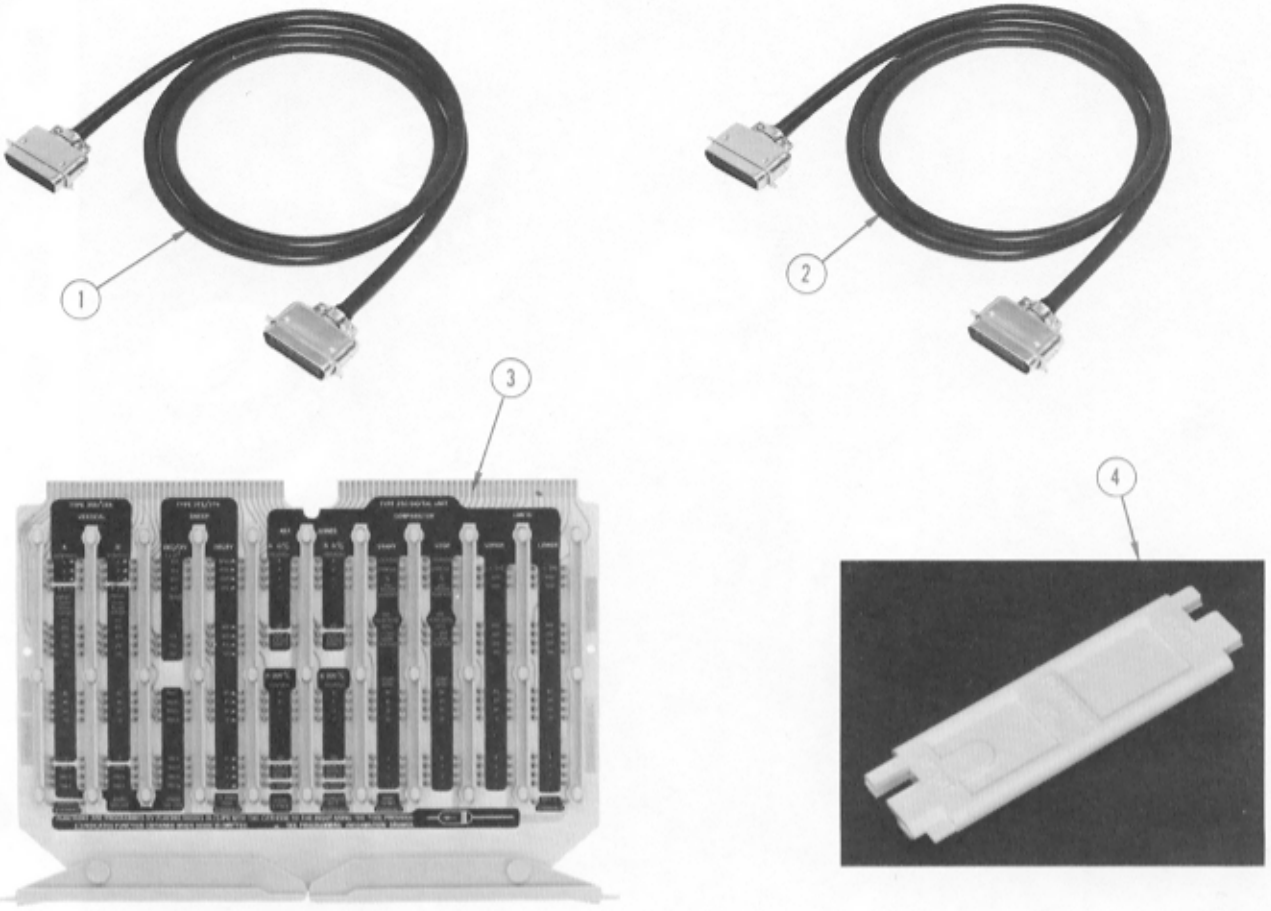

+A

Fig. & Index No.	Tektronix Part No.	Serial/Model No. Eff	Disc	Qty	1 2 3 4 5	Description

FIG. 3 STANDARD ACCESSORIES

3-1	012-0131-00		5	CABLE, interconnecting, 6 feet long
-2	012-0131-01		1	CABLE, interconnecting, 6 feet long
-3	670-0285-00		15	ASSEMBLY, circuit card, program
-4	003-0611-00		2	INSERTION TOOL, diode
	334-1337-00		2	SHEET, blank label
	016-0254-00		3	DIODE PACKAGE
	070-0809-00		2	MANUAL, instruction (not shown)
	070-0908-00		1	TEST FORMAT (not shown)

OTHER PARTS FURNISHED W/R241

	016-0097-00	1	KIT, ruggedizing hardware (not shown)
	016-0099-00	1	KIT, rackmounting hardware (not shown)
	351-0086-00	1	TRACK, slide, stationary & inter-section
	- - - - - -	-	(pair, not shown)

©

SECTION 9
RACKMOUNT/BENCHMOUNT INSTRUCTIONS

Change information, if any, affecting this section will be found at the rear of the manual.

Introduction

The Types 241 and R241 Programmers are identical except for the hardware attached to the outside of the instruments. The Type 241 is designed for operation on any flat surface such as a work bench, and can be stacked with other instruments having the same cabinet design. The Type R241 is designed to be installed in a standard 19-inch wide rack which has Universal, EIA, RETMA or Western Electric hole spacing. Both types of the Programmer are available from the factory, and either configuration can be converted to the other. Detailed conversion instructions and rack-mounting instructions are contained in this section.

CONVERTING FROM TYPE 241 TO TYPE R241

Removing Parts

Parts peculiar to the Type 241 must be removed from the Programmer chassis before it can be converted to a Type R241. These parts are shown in Fig. 9-1 and can be removed as follows:

1. Disconnect the Type 241 from the power source and remove the cables from the rear panel.

2. Loosen the four screws on the top dust cover and lift the cover off.

3. Place a thin device under the outer edge of one of the plastic handle-end covers and pull up to remove the cover. Remove the two screws from the end of the handle. Repeat this procedure at each of the other three corners of the instrument. The handles and plastic plates can then be removed.

4. Stand the instrument on its rear feet. Remove the front corner trim strips (black) by prying out on their front edges. They are glued in place and removal will probably bend them. They can be bent back into shape for later re-use.

5. Spring the flipstand out of the two front feet. Bend it only as far as necessary for removal, to avoid damaging it.

6. Pry the pads from the feet on the bottom corners of the instrument. Remove the screws from the feet and the screw from the flipstand retainer. Remove the feet and retainer. If the instrument is to be re-converted to a Type 241, save the parts that have been removed.

Parts Required

The following parts must be added to complete the conversion. Installation instructions follow the list. Locations of parts to be attached to the chassis are shown in Fig. 9-2. Identification of the slide-out track assembly parts is contained in Fig. 9-4.

TABLE 9-1

Parts Found in the Type R241 Only

Qty.	Item	Tektronix Part No.	Figure Number
1 ea	Modification Kit, Standard-to-Rackmount Conversion; contents as follows:	040-0489-00	
	2 ea Bracket,[1] angle, plain	407-0296-01	9-2
	2 ea Handle	367-0076-00	9-2
	4 ea Washer, cup, #10	210-0833-00	9-2
	4 ea Screw, 10-32 X 1/2 inch, OHS	212-0512-00	9-2
	4 ea Screw, 10-32 X 7/8 inch, FHS	212-0562-00	9-2
	4 ea Screw, 10-32 X 0.434 inch, FHS	212-0574-00	9-2
	1 pr Track, slide-out section, Tiltlock (chassis section)	351-0082-00	9-2
	1 pr Track, slide, stationary and intermediate sections; mounting hardware included	351-0086-00	9-3 9-4

[1] **A bracket bearing the inscription "R241" can be ordered separately under Part No. 407-0296-06.**

Qty.	Item	Tektronix Part No.	Figure Number
12 ea	Screw, 10-32 X 3/8 inch, PHS	212-0507-00	9-2
12 ea	Nut, keps, 10-32 X 3/8	220-0410-00	9-2
4 ea	Washer, plastic, 0.191 inch ID, 5/8 inch OD	210-0917-00	9-2
2 ea	Strip, trim, blue, 16.3 inches X 0.876 inch	124-0188-00	9-2
4 ea	Screw, 10-32 X 3/8 inch, FHS	212-0574-00	9-2
1 ea	Rackmount Kit, Rear Support; Contents as follows:	016-0097-00	9-10
	2 ea Screw, 1/4-20 X 1/2 inch, HHS	213-0001-00	9-10
	2 ea Bushing, instrument securing, 1.05 inches long	358-0310-00	9-10
	2 ea Pin, support, 1/2 inch D	214-0502-00	9-10
	2 ea Washer, neoprene, 0.484 inch ID, 0.828 inch OD	210-0984-00	9-10
	2 ea Washer, flat, 0.512 inch ID, 7/8 inch OD	210-0985-00	9-10
	4 ea Washer, flat, 0.264 inch ID, 1 1/8 inch OD	210-0866-00	9-10
	2 ea Bar, support, 5.0 inches long	381-0279-00	9-10
	8 ea Screw, 10-32 X 1 1/2 inches, RHS	212-0553-00	9-10
	2 ea Spacer, block, 1.625 X 1.0 X 0.50 inch	361-0153-00	9-10
	2 ea Bracket, angle, support	407-0073-00	9-10
	2 ea Lockwasher, internal, 1/4 inch ID, 15/32 inch OD	210-0011-00	9-10
	2 ea Screw, 1/4-20 X 0.750 inch, HHS	213-0134-00	9-10
	4 ea Screw, 10-32 X 1 1/4 inches, HHS	212-0520-00	9-10
	4 ea Washer, flat, 0.204 ID, 0.438 inch OD	210-0805-00	9-10

Installing Parts

1. Remove the nut and washers from the pivot screw of the right side chassis section. The right side section can be identified by the tiltlock release knob which will point toward the top of the unit after installation. (See Figs. 9-2 and 9-4.) Hold the assembly together while removing the nut and while installing the assembly on the chassis.

2. Place the assembly against the chassis, inserting the pivot screw into the hole indicated in Fig. 9-2. Replace the flat washer, lock washer and nut on the pivot screw and hand-tighten the nut. Check that the slide, the tiltlock mechanism, and the chassis side are tight against each other. If not, manipulate the components while working the pivot screw until they do fit together tightly. Then again hand-tighten the nut.

3. Fasten the mounting arm to the chassis, using six 10-32 x 3/8 inch pan-head screws and six 10-32 keps nuts (see Fig. 9-2).

4. Apply light pressure to the top edge of the track section (black) and note the track position with respect to the bottom edge of the cabinet. If it is not parallel to the bottom, keep the pressure applied and rotate the pivot screw with a screwdriver until the screw's cam action causes the track to be parallel with the bottom of the cabinet. Tighten the nut with a wrench without permitting the pivot screw to turn. After tightening, recheck that the track is parallel to the bottom of the cabinet.

5. Install the left slide-out track assembly by following the procedure described previously.

6. Install and tighten a 10-32 X 3/8 FHS screw in each corner on the bottom of the instrument where the feet were removed.

7. Attach a handle to each angle bracket and connect the brackets to the front corners of the instrument. Note that if one of the brackets contains an R241 inscription, it should be attached to the right corner. The oval head screw, cup washer and plastic washer, shown as part of the handle assembly, should be installed after the Type R241 is placed in a rack.

8. Set the Type R421 on its bottom.

9[2]. Peel the tape from the back of a trim strip. Put the strip in place in the recess at the top-front of the unit by inserting the rear edge first and then lowering the strip into place. Apply a firm pressure along the entire strip to complete the bond. Repeat with the second strip at the rear of the unit.

10. Replace the top cover of the instrument.

The conversion from Type 241 to Type R241 has been completed and the Programmer can be installed in a rack, provided that a rack has been equipped as explained later in this section.

[2] **For only temporary conversion to a Type R241, this step may be omitted.**

CONVERTING FROM TYPE R241 TO TYPE 241

Removing Parts

Parts peculiar to the Type R241 must be removed from the Programmer chassis before it can be converted to a

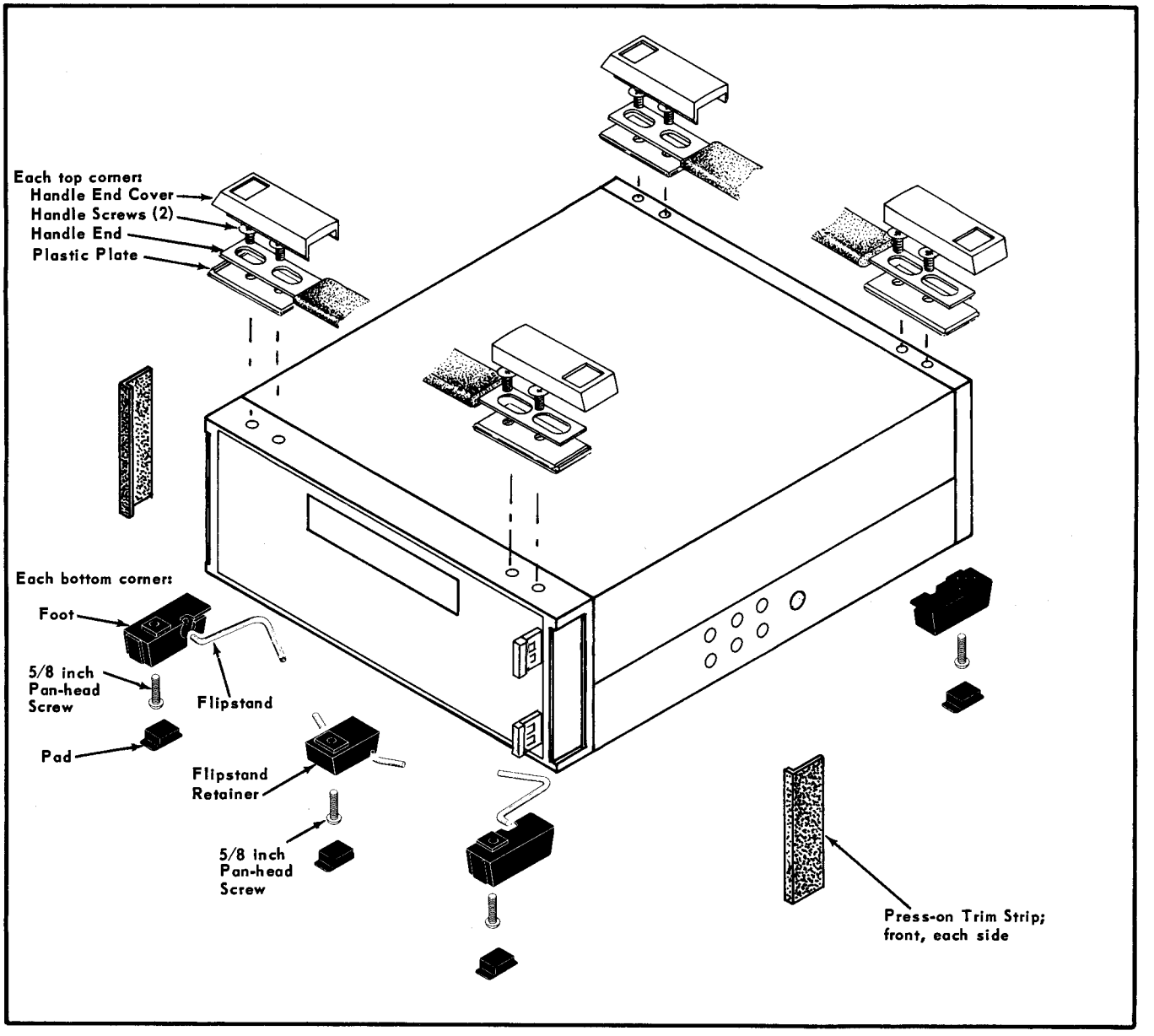

Fig. 9-1. Parts peculiar to the Type 241.

Type 241. These parts are shown in Fig. 9-2 and can be removed as follows:

1. Disconnect the Type R241 from the power source and remove the cables from the rear panel. Remove the unit from the rack and set it down on its bottom surface.

2. Lift the front and rear trim strips from the top of the chassis. Use a thin-bladed device to pry them up at one corner and then peel them off. Removal will bend them, but they can be straightened for later re-use.

3.[3] Loosen the four screws on the top dust cover and remove the cover.

4. Set the instrument on its rear feet.

5.[3] Remove the six nuts, washers and screws from the mounting arm of the right chassis section assembly.

6.[3] Remove the nut and washers from the pivot screw, while holding the pivot screw and chassis section assembly in place. Remove the pivot screw and chassis section assembly as a unit, holding it together tightly. Replace the washers and nut and hand-tighten the nut to hold the assembly together after removal.

7.[3] Remove the left chassis section assembly, following the procedure described previously.

8. Remove the outermost screw from each of the four corners on the bottom of the chassis.

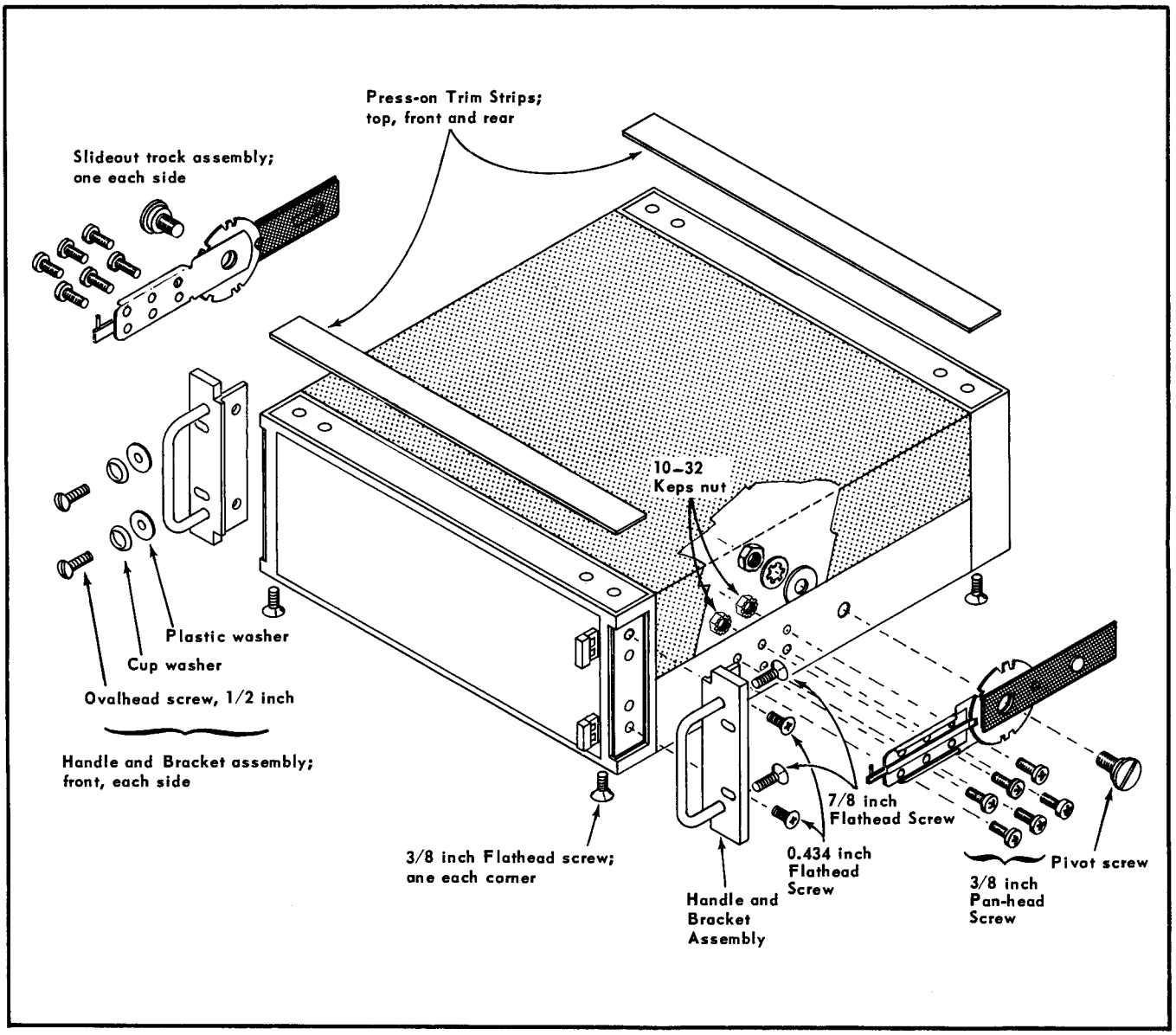

Fig. 9-2. Parts peculiar to the Type R241 chassis. See Figs. 9-4, 9-5 and 9-10 for rack attachment parts.

9.[3] Remove the angle brackets from the front corners of the chassis.

If the instrument is to be re-converted to a Type R241, save all parts that have been removed.

Parts Required

The following parts must be added to complete the conversion. Installation instructions follow the list. Locations are shown in Fig. 9-1.

TABLE 9-2
Parts Found in the Type 241 Only

Qty.	Item	Tektronix Part No.	Figure Number
2 ea	Handle, carrying	367-0073-00	9-1
4 ea	Plate, plastic	386-1352-00	9-1
8 ea	Screw, 10-32 X 0.40 inch, FHS	213-0155-00	9-1
4 ea	Cover, handle end	200-0728-00	9-1
2 ea	Strip trim, 0.995 X 6.45 inch	124-0189-00	9-1
2 ea	Foot, cabinet, front right and rear left	348-0096-01	9-1
2 ea	Foot, cabinet, front left and rear right	348-0098-01	9-1
5 ea	Screw, 10-32 X 5/8 inch, PHS	212-0509-00	9-1
4 ea	Pad, cabinet foot	348-0097-00	9-1
1 ea	Retainer, Flipstand	214-0846-01	9-1
1 ea	Flipstand, cabinet	348-0095-01	9-1

Installing Parts

1. Install the four feet, orienting them as shown in Fig. 9-1, then fully insert the four foot pads. Install the flipstand retainer, then spring the flipstand in place.

2.[3] Remove the protective strip from the back of a press-on trim strip (black) and install it on one front corner as shown. Engage the front edge first to ensure alignment, then press the entire strip firmly in place. Repeat at the other front corner.

3. Set the Programmer on its bottom feet and re-install the top cover

4. Place a plastic plate at each corner of the top and a handle at each end of the instrument as shown. Center each plastic plate front-to-back in the frame recess (to permit installation of the end cover) before tightening the screws. Snap the plastic handle-end covers in place. This completes the conversion.

[3] **For only temporary conversion to a Type 241, this step may be omitted.**

RACKMOUNTING THE TYPE R241

General Information

The slide-out tracks permit the Type R241 to be extended out of the rack for troubleshooting or servicing (see Fig. 9-3). When not extended, the instrument is held into the rack with four securing screws.

The chassis sections of the slide-out tracks are installed on the chassis at the factory or can be installed according to the preceding instructions. The stationary sections are to be attached to the mounting rails of the racks. When installed, the intermediate sections slide freely between the chassis and stationary sections as the instrument is pulled out or pushed into the rack.

The mounting hardware provided with the slide-out tracks is intended to make them adaptable to a variety of racks and installation methods. Not all of the hardware will be needed for any particular installation, so only the parts that are required for the specific mounting method should be used.

In order to operate the Type R241 in the extended position, the instrument must be mounted close enough to its companion instruments to permit the interconnecting cables to reach between instruments, and the input power connection must be located close enough for the power cord to reach.

Mounting Considerations

A wide variety of mounting methods is available for installing the slide-out tracks in the rack. The following factors should be taken into consideration when choosing the mounting method of a particular installation:

1. Depth of the rack.

2. Degree of mechanical stability required.

3. Mounting method used for other instruments in the rack.

4. Type of mounting holes in the supporting rails; that is, whether they are tapped, untapped or countersunk.

5. Whether or not the rear support rails are movable, and if movable, whether they can be positioned at any location or moved only in discrete increments.

6. Relative thicknesses of the front panels of the various instruments in the rack.

7. General appearance desired for the completed rack assembly.

These factors will usually determine whether the front mounting flanges of the stationary sections are to be mounted in front of the front rails or behind them, whether or not the ruggedizing rear-support hardware is to be used, etc.

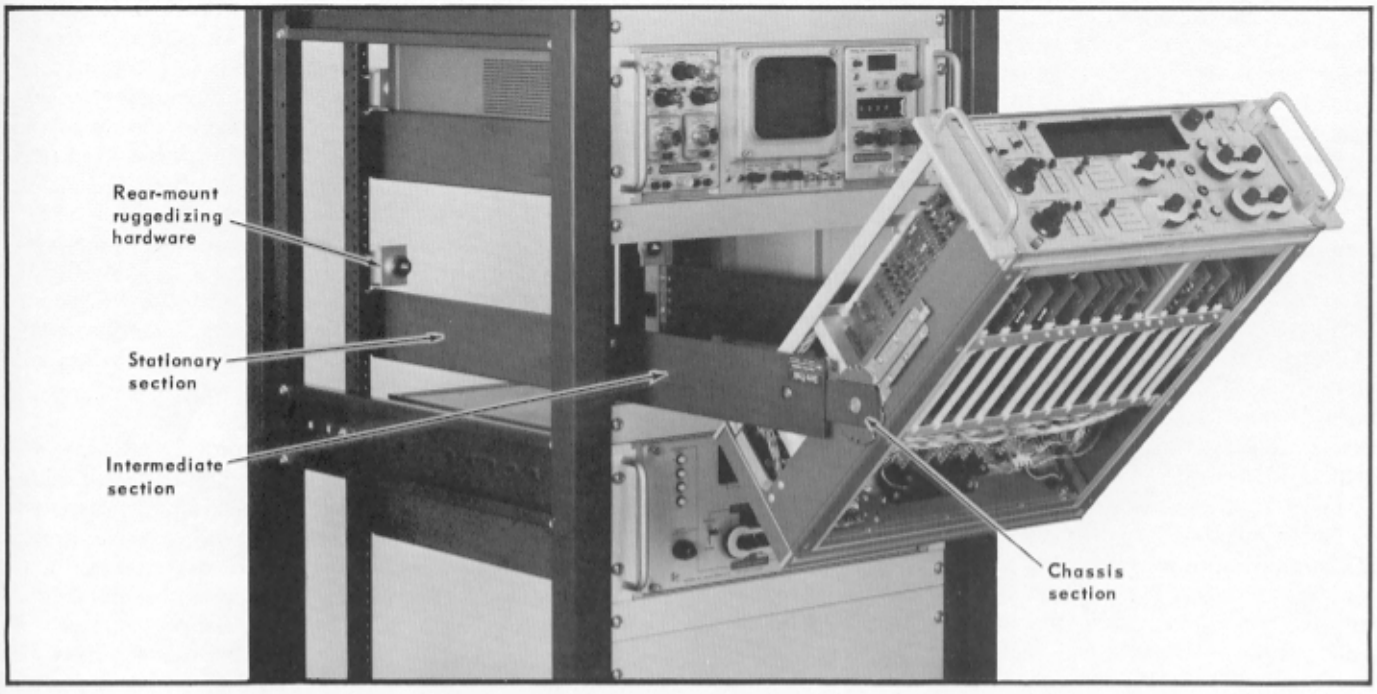

Fig. 9-3. An instrument extended on slide-out tracks; shown with rack sides and instrument panels removed. Mounting of the Type R241 is identical to that of the instrument shown.

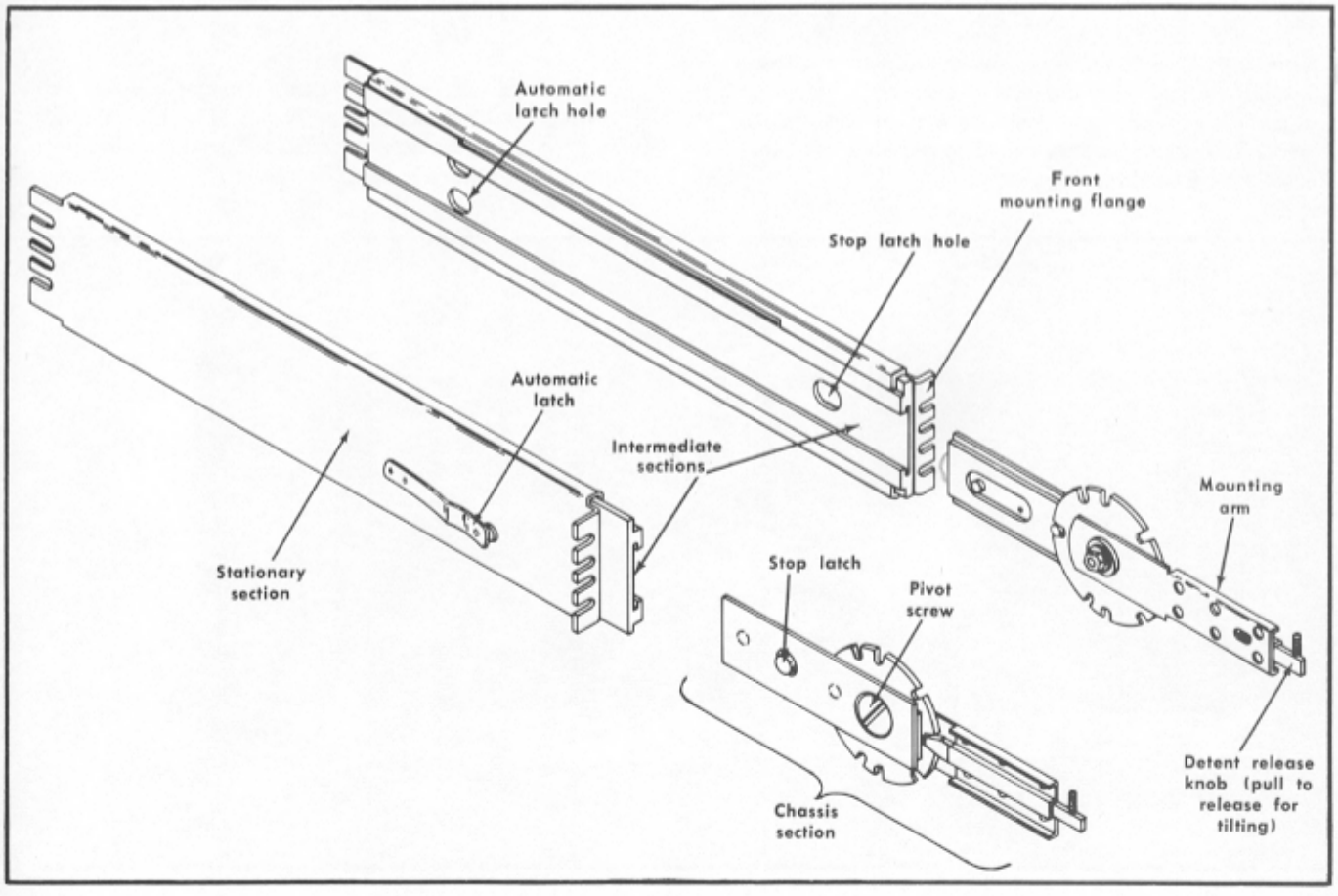

Fig. 9-4. Slide-out track assemblies.

Front-End Mounting with Tapped Front Rails. If the mounting holes in the front rails of the rack are tapped for 10-32 screws, the easiest method of attaching the front ends of the stationary sections to the rack is to mount the front flanges in front of the front rails (see Fig. 9-8A and B). When mounted in this position, 10-32 pan-head screws may be used directly to attach the front flanges to the rails, or 10-32 flathead screws may be used with countersunk shim material to clamp the front flanges to the rails.

The use of countersunk shim material permits depth adjustment of the front panel and also provides better support for the front flanges if the flanges are mounted in front of the front rails. If the various instruments in the rack have different panel thicknesses, different thicknesses of shim material can be used to make the front surfaces of all panels flush with each other. The shim material should be approximately 1/2-inch wide and have a minimum thickness of approximately 1/8 inch to accommodate the countersunk screw heads. Each strip should be at least as long (vertical dimension in the rack) as the width of the front flanges of the stationary sections (3 1/8 inches). Since the dimensions of the shim material are determined entirely by the dimensions of the rack installation, no shim material is provided with the mounting hardware.

NOTE

When the flanges are mounted in front of the front rails or when shim material exceeding 1/8-inch in thickness is used, special adjustment of the ruggedizing rear-mount hardware may be required (see Standard Rear-End Mounting below).

Front-End Mounting with Untapped Front Rails. If the mounting holes in the front rails are not tapped, bar nuts (Fig. 9-5) must be used behind the rails to accommodate the mounting screws. All of the options previously described for tapped front rails also apply to the untapped rails when used with bar nuts. In addition, the untapped front rails (with bar nuts) permit the front mounting flanges to be attached to the rear sides of the front rails if desired (see Fig. 9-8C). When mounted in this position, the flanges are clamped between the bar nuts and the front rails. Either 10-32 pan-head screws or 10-32 flat-head screws with shim material may be used as described for tapped front rails, or 10-32 flat-head mounting screws may be countersunk into the front rails.

Standard Rear-End Mounting. To provide an adequate shock-mounted installation, the rear end of each stationary section must be mounted firmly to a rear-support rail using the ruggedizing hardware. If the rack does not have a strong supporting member located the correct distance from the front rails (Fig. 9-6), an additional support must be provided. Use the 10-32 round-head screws provided in the ruggedizing kit (see Fig 9-10) to mount the rear bar supports to the rear rails, and use 10-32 pan-head screws to attach the stationary sections of the tracks to the bar supports. If the mounting holes in the rear rails are not tapped, bar nuts must also be used for mounting the bar supports.

NOTE

Additional washers and possibly longer support-pin and/or securing bushing screws (Fig. 9-10) may be needed to make the ruggedizing support fit securely if any of the following conditions exist:

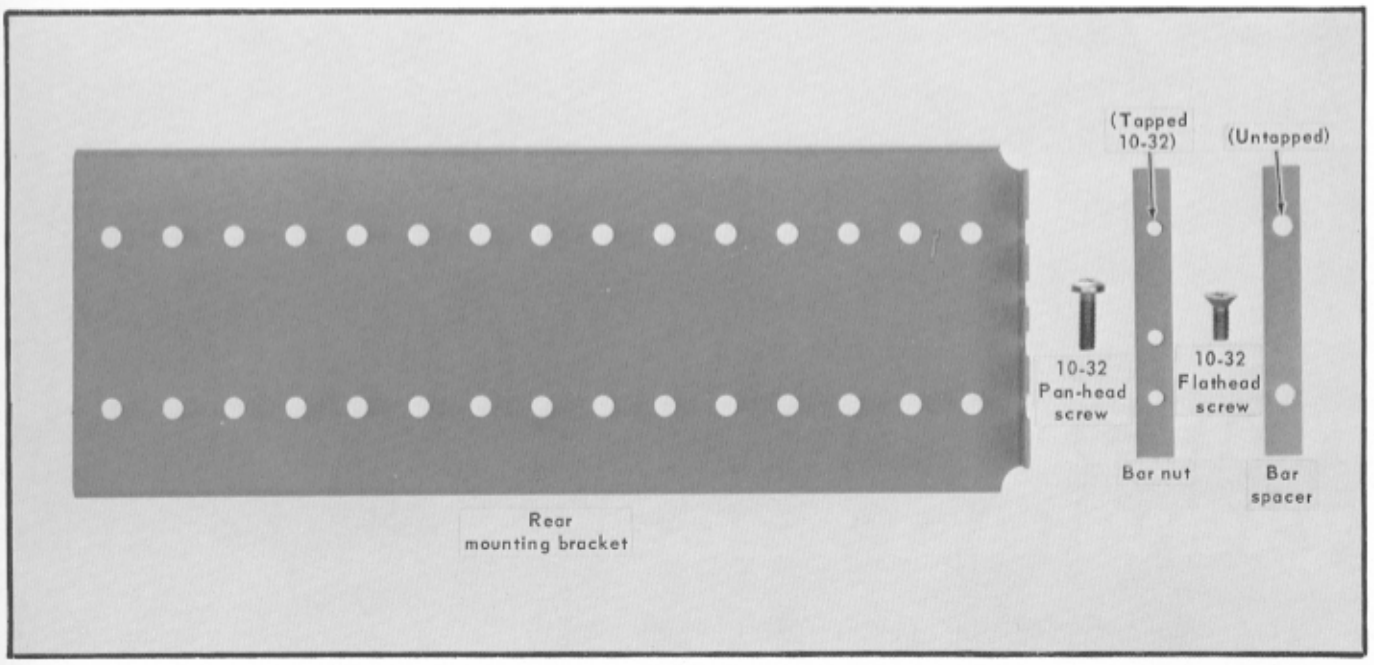

Fig. 9-5. Identification of mounting hardware provided with the stationary intermediate track section.

1. If the front flanges of the stationary sections are mounted in front of the front rails.

2. If more than 1/8-inch of shim thickness is used for mounting the front flanges.

3. If the support rails are located at fixed positions such that the distance from the front surface of the front rail to the rear surface of the rear rail is slightly greater than 21 inches.

No more than about 1/2 inch of washer thickness can be added to each rear-support mounting without deteriorating the ruggedizing capability of the installation.

Non-Ruggedized Rear-End Mounting. If the rear support rails cannot be positioned so that the distance from the front surface of the front rails to the rear surface of the rear rails is approximately 21 inches, the rear-mount ruggedizing hardware cannot be used. Or if the particular installation does not require a high degree of physical rigidity, the use of ruggedizing hardware may be omitted. In either of these cases, an alternative method of supporting the rear ends of the stationary sections is required. Fig. 9-12 illustrates two alternative mounting methods using the rear-mounting brackets instead of the ruggedizing hardware. The depth between the front and rear rails of the rack will determine which of these configurations should be used.

CAUTION

Although the alternative mounting methods shown in Fig. 9-12 provide adequate support under normal operating conditions, they do not provide the solid rear-mount support required for a ruggedized installation. If mounted without the ruggedizing hardware, the instrument may be damaged if subjected to severe vibration or shock.

Rack Dimensions

Fig. 9-6 shows the maximum and minimum dimensions required between support rails to provide adequate support for the Type R241 and to assure proper operation of the slide-out tracks. Minimum overall depth of the rack from the front surface of the front rails to the rear of the cabinet must be at least 22 1/2 inches to accommodate the rear-mount ruggedizing hardware, power cord and interconnecting cables, and to provide enough space for air circulation.

Mounting Procedure

The following mounting and alignment procedures use the rear-support ruggedizing hardware for attaching the rear end of each stationary section to the rear support rail. If the ruggedizing hardware is not to be utilized, refer to the procedure exceptions given under Non-Ruggedized Mounting which follows the Alignment Procedure.

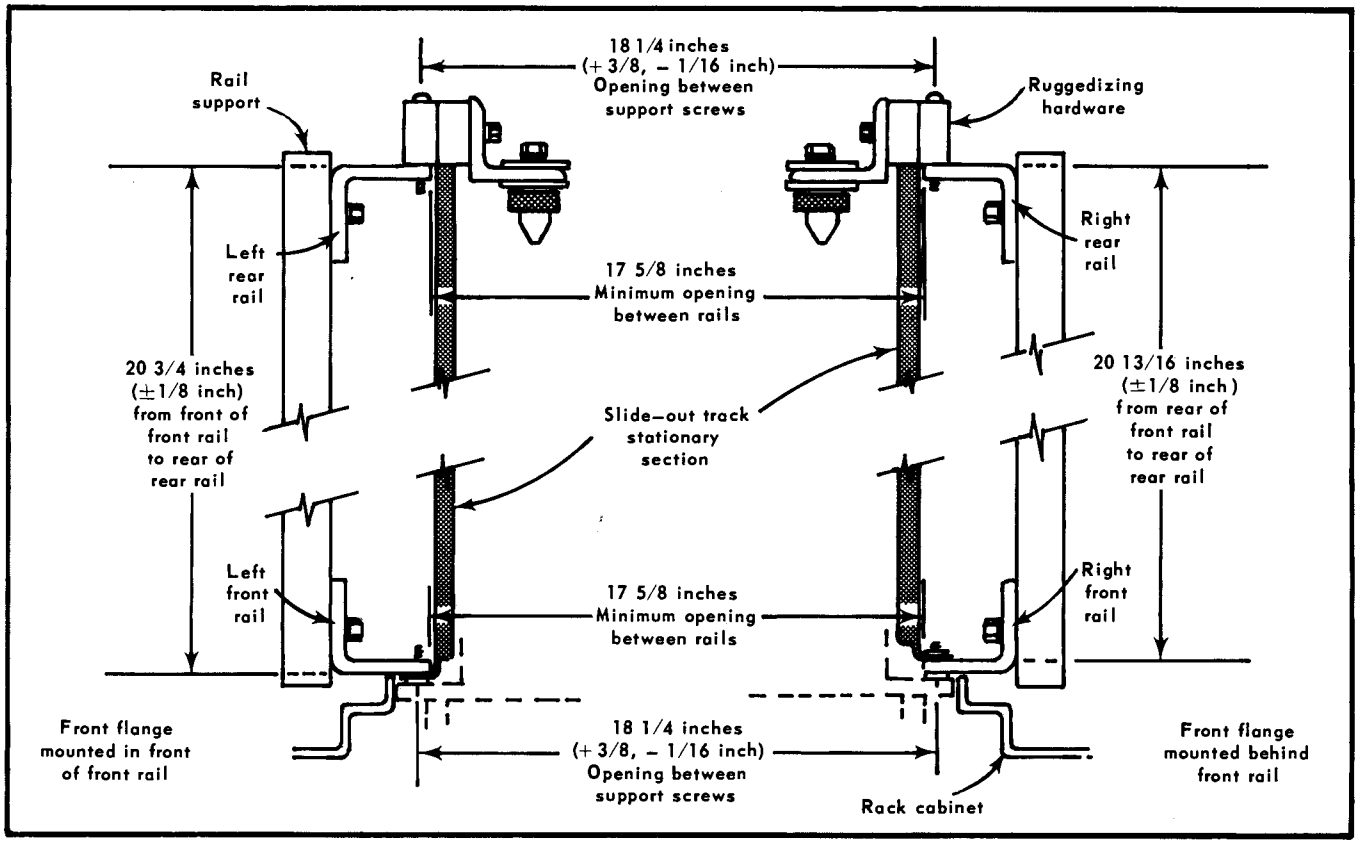

Fig. 9-6. Required spacing of support rails for mounting stationary sections of slide-out tracks.

The stationary and intermediate sections of the slide-out tracks are shipped as matched pairs and should not be separated. To distinguish between the right and left stationary/intermediate assemblies, note the position of the automatic latch (see Fig. 9-4) in each assembly. The automatic latch should be located near the bottom of the assembly when it is installed in the rack.

Use the following procedure to install the stationary sections of the slide-out tracks and the Type R241 in the rack.

1. Referring to Fig. 9-7, select the proper front-rail mounting holes for the stationary sections.

2a. If the front flanges of the stationary sections are to be mounted in front of the front rails, mount the front of each stationary section as shown in Fig. 9-8A or B.

2b. If the front flanges are to be mounted behind the front rails, mount the front end of each stationary section as shown in Fig. 9-8C.

3. Temporarily attach a bar support to the rear end of each stationary section with two 10-32 pan-head screws and a bar spacer. Do not tighten the screws.

4. With the front end of each stationary section attached to the front rail, hold the track in a level position in the rack and locate the proper rear-rail mounting holes. (See Fig. 9-9).

5. Attach the bar supports to the rear support rails with 10-32 round-head screws (Fig. 9-10), using at least two mounting screws for each bar support.

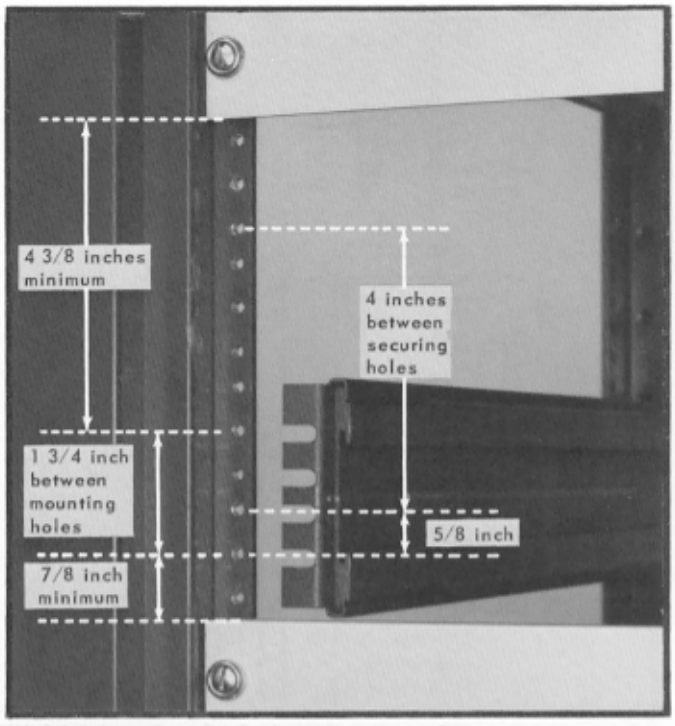

Fig. 9-7. Vertical mounting position for front end of slide-out tracks.

6. Tighten the screws holding the bar supports to the rear rails, then tighten the screws holding the stationary sections to the bar supports.

7. Mount the angle brackets and spacer blocks on the bar supports as shown in Fig. 9-10, but do not tighten the screws.

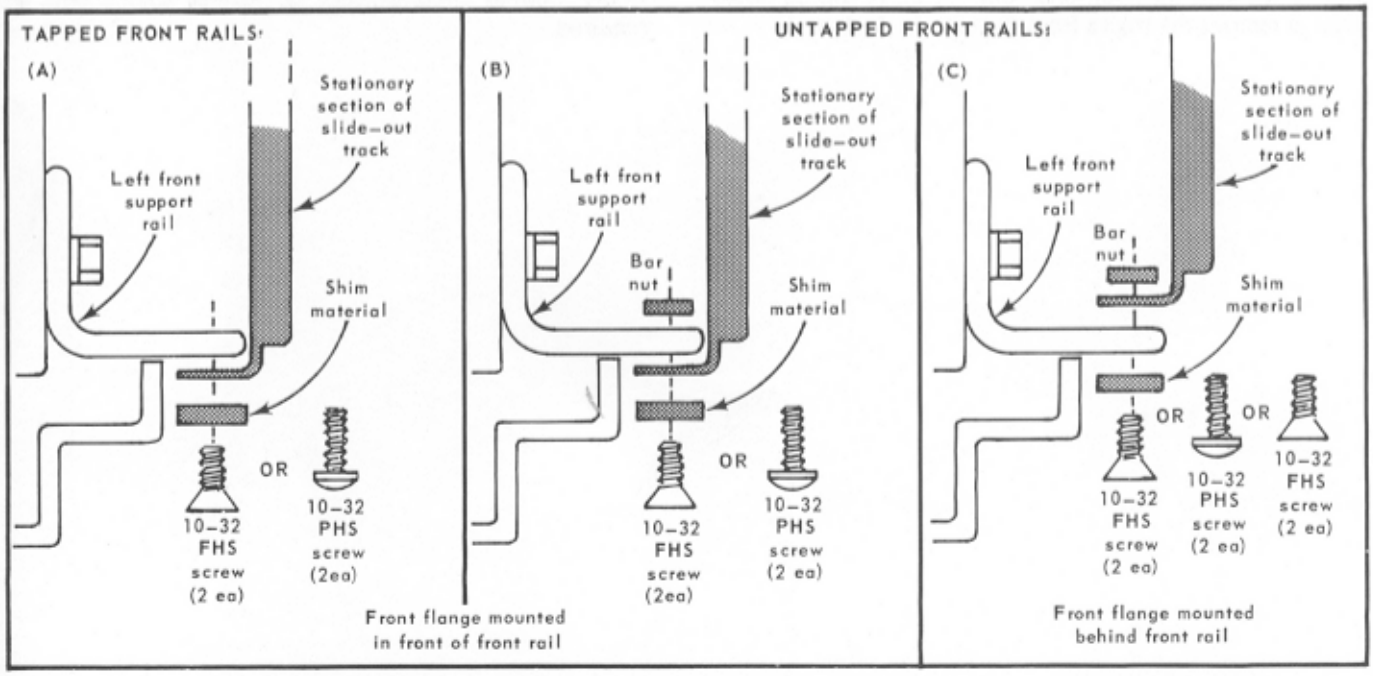

Fig. 9-8. Methods for mounting front end of stationary sections as described in the text. Thickness of optional shim material is selected to compensate for differences in front-panel thickness of various instruments in the rack. (Shim material described in the text is not provided.)

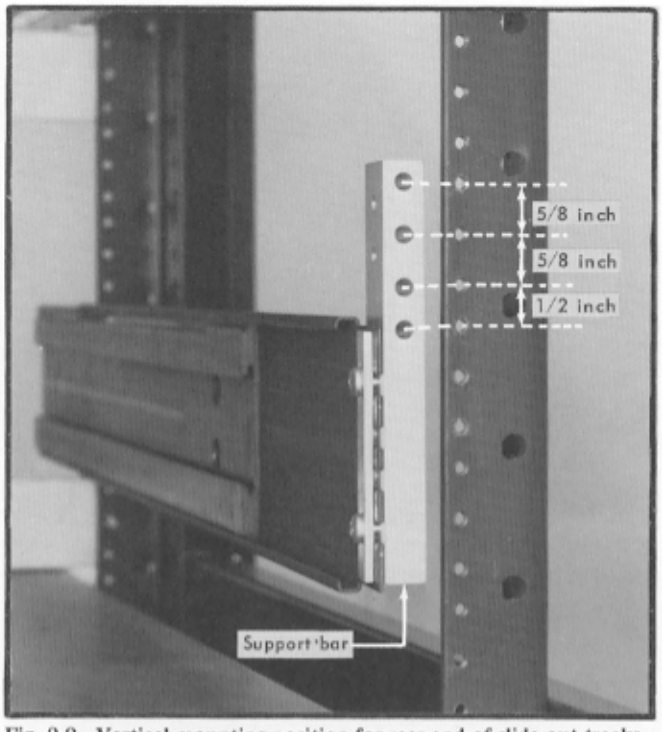

Fig. 9-9. Vertical mounting position for rear end of slide-out tracks. Left stationary section is shown.

8. Fasten the support pins and washers to the angle brackets in the order shown in Fig. 9-10, but do not tighten the screws. Be sure the spacers are properly centered.

9. Remove the top dust cover from the Type R241 and mount the two securing bushings (Fig. 9-10) on the rear panel of the instrument with 1/4-20 hexagonal-head screws. Tighten the screws and replace the dust cover on the instrument.

10. Referring to Fig. 9-13, insert the instrument into the rack. Do not connect the power cord or interconnecting cables yet and do not install the securing screws.

Alignment Procedure

Use the following procedure to adjust the instrument alignment in the rack.

1. Position the instrument approximately half way out of the rack so that the point of rotation on each chassis section is adjacent to the front rail of the rack.

2. Loosen the mounting screws holding the front mounting flanges to the front rails.

3. Hold the instrument in the center of its mounting space and re-tighten the front mounting screws.

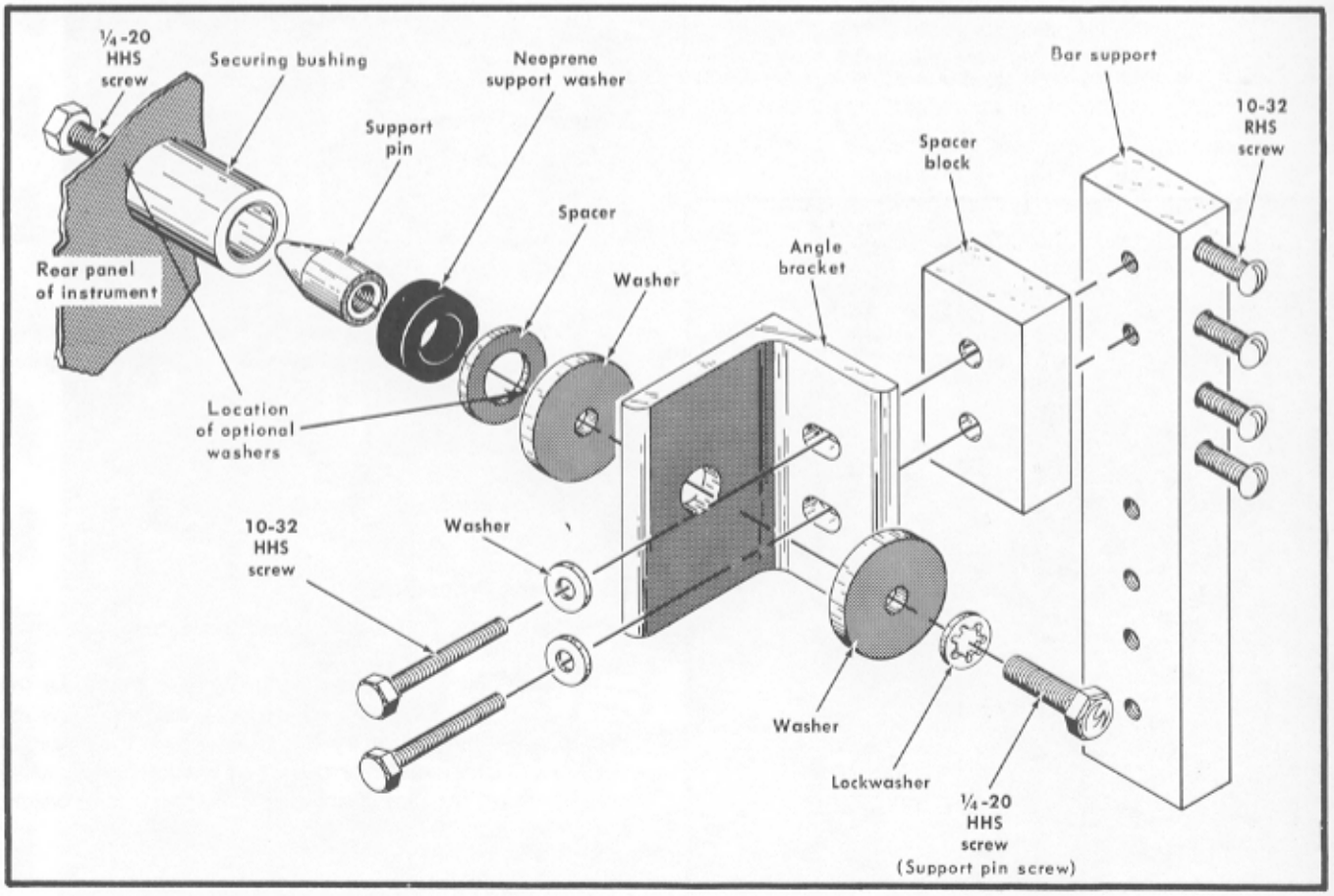

Fig. 9-10. Rear-support ruggedizing hardware. Optional washers (purchased separately under Tektronix Part No. 210-0866-00) may be required for depth adjustment as described in the text.

4. Push the instrument all the way into the rack and check the vertical and horizontal alignment of the front panel. If necessary, readjust the positioning as described in steps 2 and 3.

5. Push the instrument all the way into the rack again and install one securing screw through each handle bracket, using a finishing washer and a plastic washer with each securing screw as shown in Fig. 9-13. If the front rails are not tapped for the 10-32 securing screws, some other means of securing the instrument into the rack must be provided.

NOTE

If the instrument does not slide all the way into the rack easily, check the fit of the rear-support ruggedizing hardware before installing the securing screws. If necessary, move the inside support-pin washers to the outside of the angle brackets (Fig. 9-10).

6. Press each securing bushing over the support pin and check alignment of the ruggedizing hardware.

7a. If the securing bushings and support pins fit tightly together with the neoprene washers seated against the securing bushings, hold each angle bracket firmly in place and tighten the angle-bracket screws and the support-pin screw. Fig. 9-11 shows the completed installation of the left rear support.

7b. If the securing bushing and support pin do not fit tightly together, determine what adjustment is necessary; i.e., whether one or more additional washers are required for a tight fit, etc. Remove the securing screws, extend the instrument part way out of the rack and make the necessary changes in the ruggedizing hardware, then repeat steps 5, 6 and 7a.

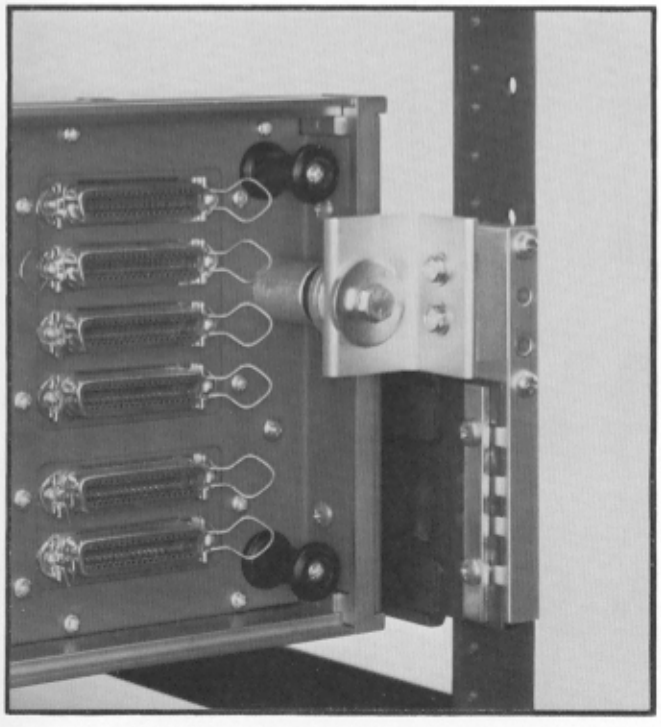

Fig. 9-11. Completed installation of left rear support.

8. Secure the handle brackets for the Type R241 to the front rails of the rack with the four securing screws, finishing washers and plastic washers (Fig. 9-13).

NOTE

The securing screws are an important part of the shock-mounted installation.

9. After all adjustments have been made and all hardware has been tightened securely, connect the power cord to a suitable power source and connect the program cables to the proper connectors on the rear panel of the instrument.

Non-Ruggedized Mounting Procedure

If the ruggedizing hardware is not to be used, refer to Fig. 9-12 for mounting the rear end of each stationary section and modify the standard Mounting and Alignment procedures as follows:

Mounting Procedure

Perform steps 1 through 2b.

Omit step 3.

Perform step 4.

Perform new step 5: Attach the rear mounting brackets to the rear support rails as shown in Fig. 9-12 and tighten the screws securely.

Omit steps 6 through 9.

Perform step 10.

Alignment Procedure

Perform steps 1 through 5. (Omit the Note in step 5.)

Perform new step 6: Loosen the screws that hold the rear mounting brackets to the support rails and allow the rear ends of the stationary sections to seek their normal positions. Tighten the rear mounting bracket screws while holding up on the rear of the instrument so that its weight is removed from the brackets.

Omit steps 7a and 7b.

Perform steps 8 and 9.

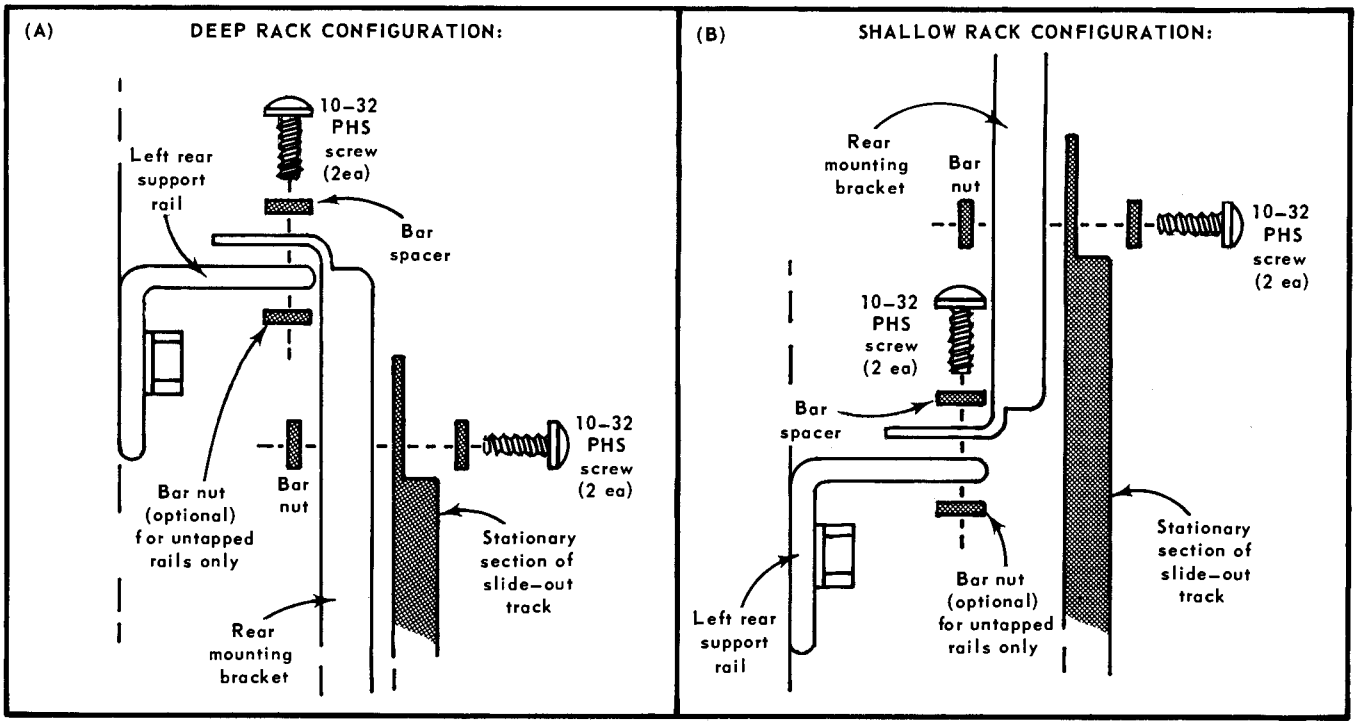

Fig. 9-12. Non-ruggedized mounting: (A) For use with racks deeper than 21 inches from the front of the front rail to the rear of the rear rail; (B) For use with racks shallower than 21 inches.

Slide-Out Track Lubrication

The special finish on the sliding surfaces of the slide-out tracks provides permanent lubrication. However, if the tracks do not slide smoothly even after being properly adjusted, a thin coating of paraffin may be rubbed onto the sliding surfaces for additional lubrication. It will be necessary to remove the tracks from the rack to do this.

Removal and Re-insertion

After the initial installation and adjustment of the slide-out tracks, the Type R241 may be removed or re-inserted in the rack by following the instructions given in Fig. 9-13. Under normal circumstances no further adjustments are required.

TO INSERT THE INSTRUMENT:

1. Pull out the intermediate section (A) of each slide-out track to its fully extended position.

2. Insert the chassis sections (B) into the intermediate sections and push the instrument in until the stop latches (C) hit the intermediate sections.

3. Press both stop latches (C) and push the instrument in until the stop latches snap into the stop latch holes (D).

4. Press both stop latches (D) and push the instrument all the way into the rack. The automatic latches will release as the instrument is pushed in.

5. Insert the 4 securing screws (E) (with finishing washers and plastic washers) through the slots in the handle brackets and screw them into the front rails of the rack.

TO REMOVE THE INSTRUMENT:

1. Disconnect the power cord and remove the interconnecting cables from the rear-panel connectors.

2. Remove the securing screws and washers (E).

3. Pull the instrument outward until the stop latches snap into the stop latch holes and the automatic latches snap into the automatic latch holes.

4. Press both stop latches (D) and pull the instrument out of the rack.

5. Press the automatic latch in each intermediate section and push the track into the rack.

6. Connect the proper interconnecting cables to the rear-panel program connectors and connect the power cord to a suitable power source.

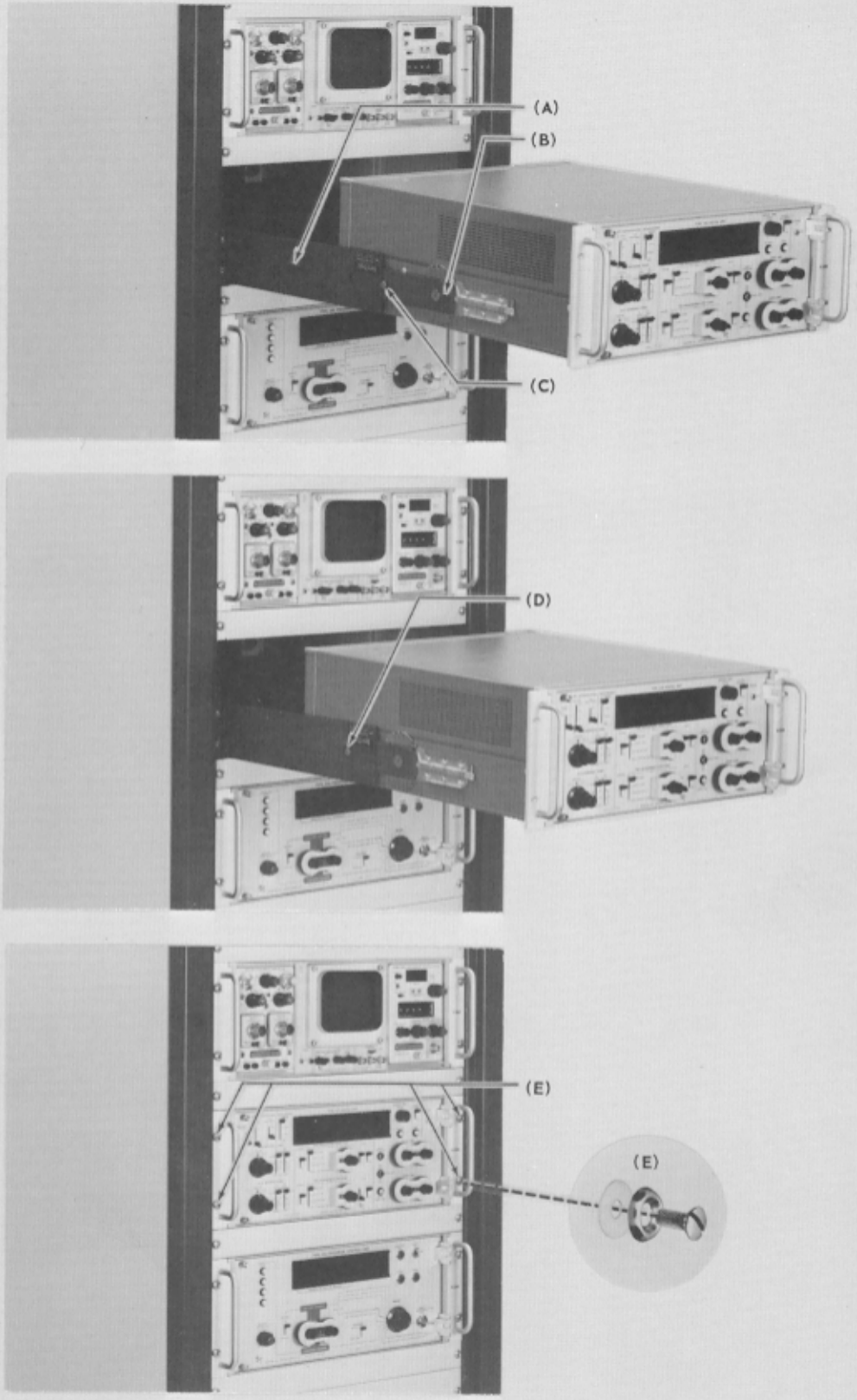

Fig. 9-13. Insertion and removal of a rackmount instrument after the slide-out tracks have been installed.

TEXT CORRECTION

General

The Program Circuit cards have been modified to indicate an added programming capability. The previously assigned spare pins are now assigned to programming sampling head multiplexing and vertical scaling. These pins (pins 6 through 16; pins 3, 4 and 5 are still unassigned) can still be used for other programming purposes.

Wherever reference is made to pins 6 through 16 (spares on J303), interpret these references as noted in the following table:

Old Pin Designation	New Pin Designation
pin 6	X10
pin 7	X.1
pin 8	AMPS
	CH A HEAD
pin 9	8
pin 10	4
pin 11	2
pin 12	1
	CH B HEAD
pin 13	8
pin 14	4
pin 15	2
pin 16	1

Fig. 1 illustrates the program board before alteration; Fig. 2 shows the same area after alteration.

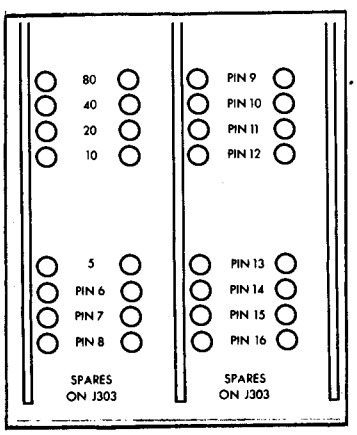

Figure 1

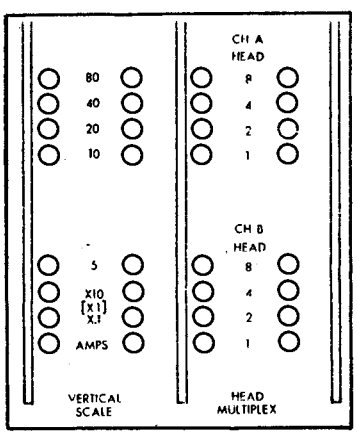

Figure 2

TEXT CORRECTION

Section 2 Operating and Programming Instructions

Page 2-11

REPLACE: Fig. 2-8 with the following:

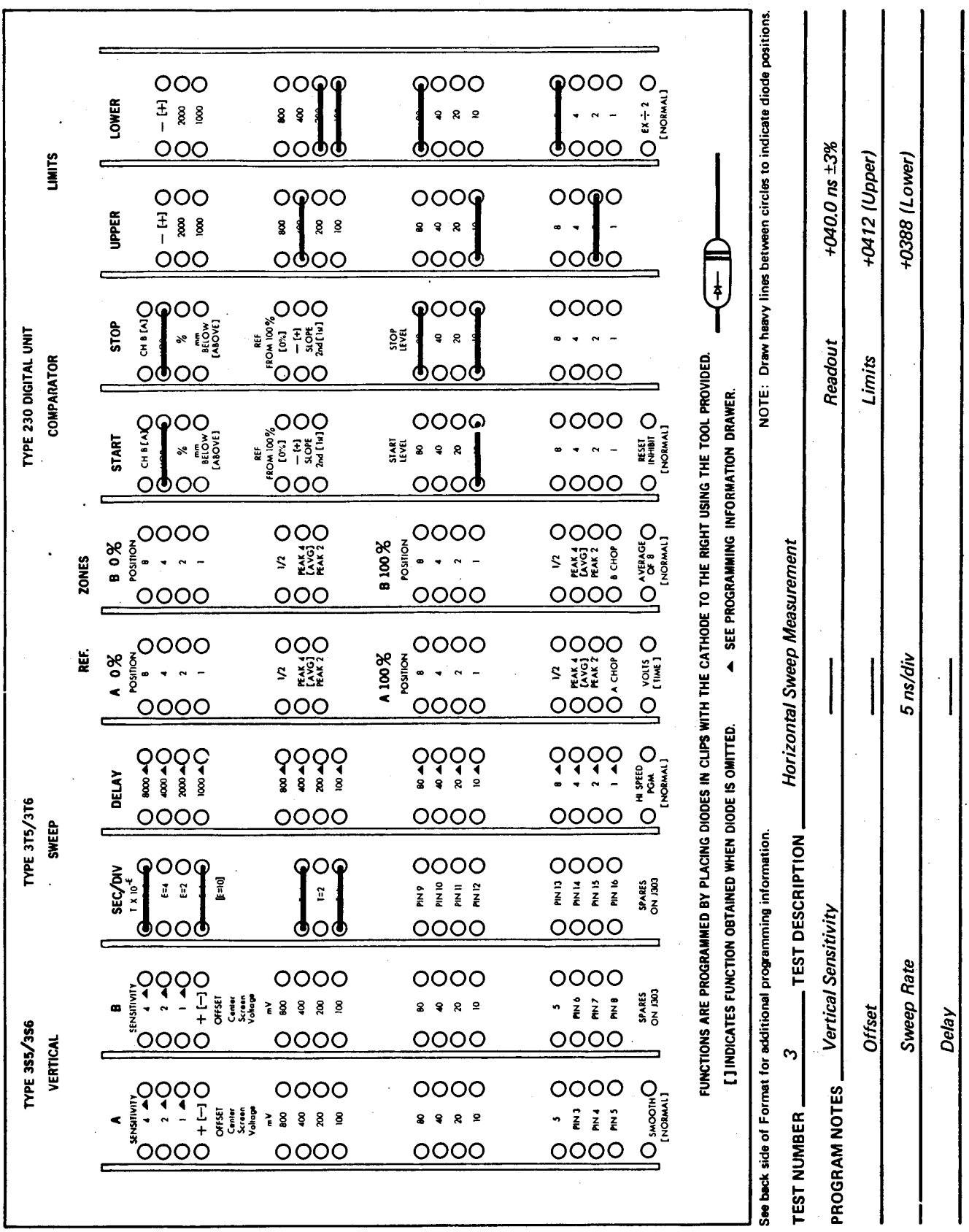

Fig. 2-8.

Section 3 Circuit Description

Page 3-8

REPLACE: Bottom part of Fig. 3-6 with the following:

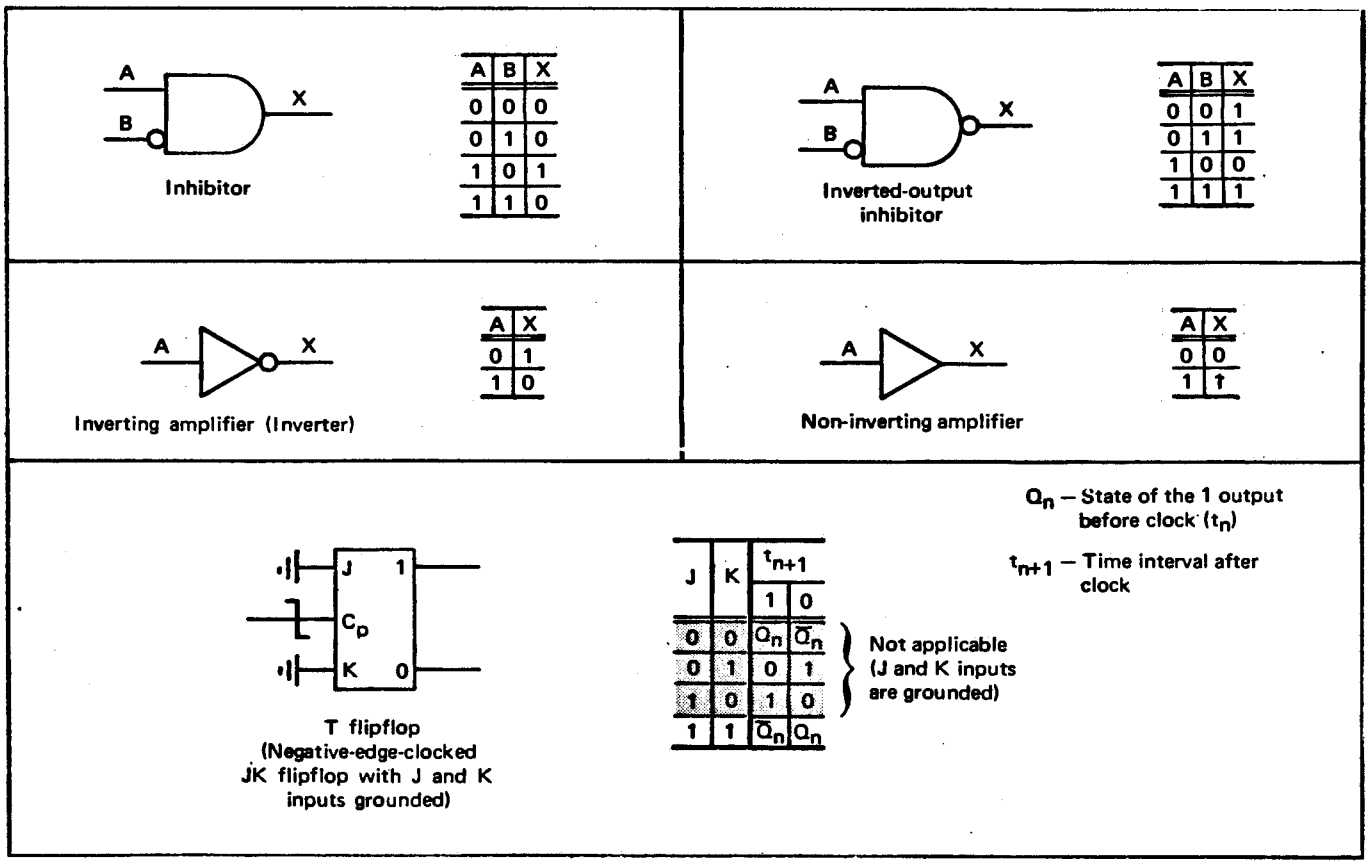

Section 4 Maintenance

Page 4-3 Column 2

CHANGE: Figure reference under TROUBLESHOOTING, Circuit Boards, to read:

(Figs. 4-4 and 4-5)

Section 8 Diagrams

Fig. 3 ACCESSORIES

CHANGE: Quantity of Item 3-3 from 1 to 15.

Section 4 -- Maintenance
Page 4-11
DELETE: Extra figure title for Fig. 4-4 at the bottom of the page. Figure title directly under the picture is the correct one.

TEXT CORRECTION

Section 2 Operating and Programming Instructions
Page 2-4 Program Cards, General Information
CHANGE: Sentences 1 and 2 of paragraph 3 to read:

Three packages of 150 specially-prepared diodes are shipped with the instrument for use on the program cards. The anode leads of these diodes are clipped shorter than the cathode leads. A package of 150 diodes may be ordered by using Tektronix Part Number 016-0254-00.

STANDARD ACCESSORIES CORRECTION

FIG. 3 ACCESSORIES
CHANGE: Fig. & Index No. 4 (line 2) to read:

016-0254-00	3 PKG, 150 diodes, silicon, 1N4152 (not shown)

ADD: the following:

334-1337-00	30 LABEL, blank (not shown)
070-0908-00	1 TABLET, test format (not shown)

TEXT CORRECTION

Section 3 Circuit Description

Page 3-4 Fig. 3-4

CHANGE: Logic level indications on the "1" and "2" input lines from the Sequence Counter to read:

False on the 1 line; True on the 2 line.

TEXT CORRECTION

Section 3 Circuit Description

Page 3-3 Column 1

CHANGE: the NOTE at the top of the column to read:

NOTE

Where a gate is described as 2^0, 2^1, or 2^2, the reference is to the binary equivalent of decimal number 1, 2, or 4. The 2^2 gates make the decision as to whether or not an 8 component is present and whether or not a 4 component is present in the binary outputs from the sequence counter; that is, whether 8 or $\overline{8}$ is true and whether 4 or $\overline{4}$ is true. The 2^1 gates make the decision concerning the states of 2 and $\overline{2}$, and the 2^0 gates make the decision concerning the states of 1 (ODD) and $\overline{1}$ (EVEN).

STANDARD ACCESSORIES CORRECTION

FIG. 3 ACCESSORIES

CHANGE: Fig. & Index No. 3-4 to read:

-4	003-0611-00	2	INSERTION TOOL, diode

TYPE 241/R241 TENT SN B030200

ELECTRICAL PARTS LIST CORRECTIONS

REMOVE:

D22	152-0185-00	Silicon	Replaceable by 1N4152

CHANGE TO:

R103	315-0560-00	56 Ω	1/4 W	5%
R104	315-0751-00	750 Ω	1/4 W	5%
R113	315-0560-00	56 Ω	1/4 W	5%
R114	315-0751-00	750 Ω	1/4 W	5%
R123	315-0560-00	56 Ω	1/4 W	5%
R124	315-0751-00	750 Ω	1/4 W	5%

ADD:

R22	315-0472-00	4.7 kΩ	1/4 W	5%
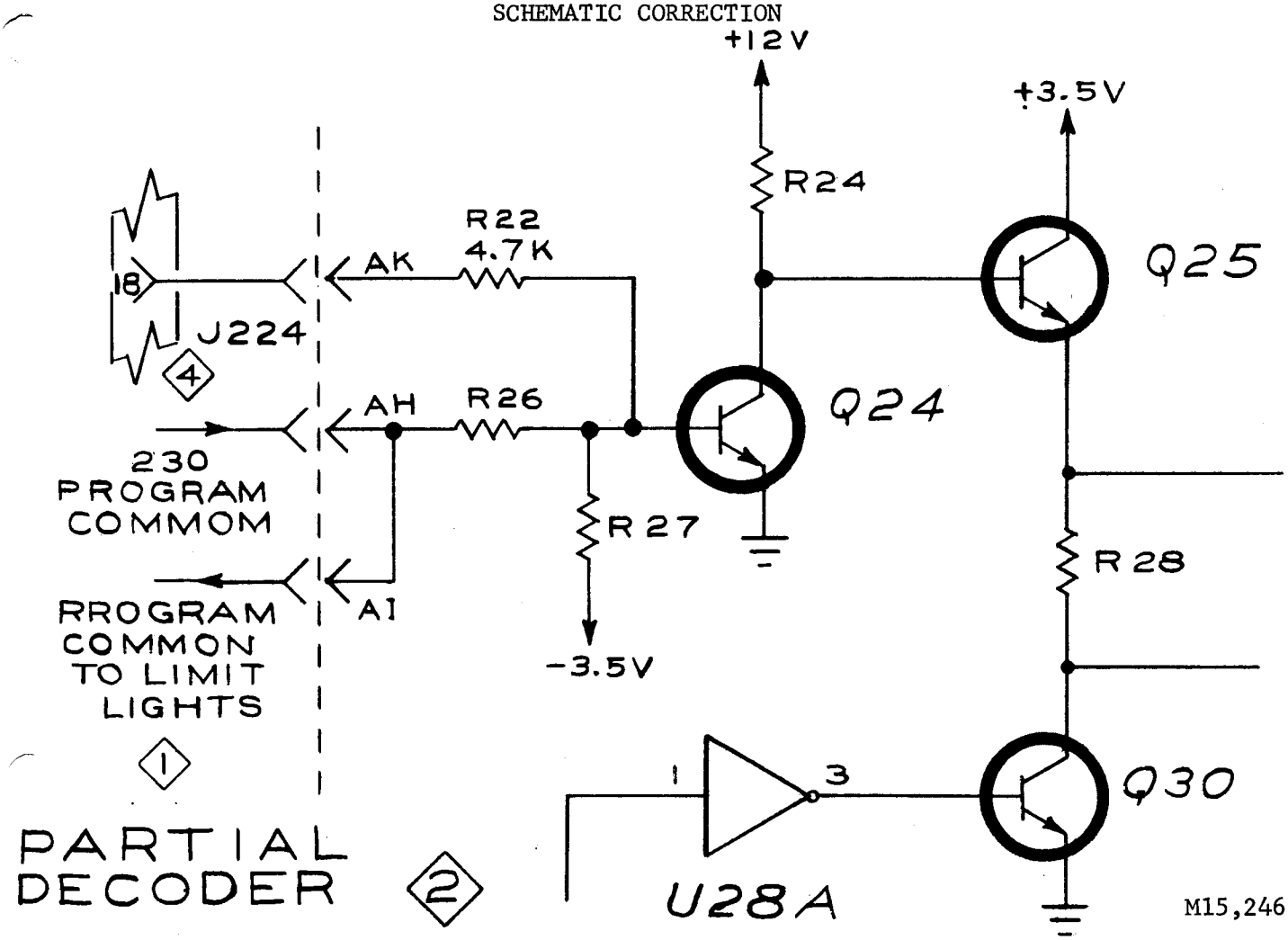
SCHEMATIC CORRECTION