OPERATOR'S & MAINTENANCE MANUAL

Model 288

20 MHz Synthesized Function Generator

© 1988 Wavetek

This document contains information proprietary to Wavetek and is provided solely for instrument operation and maintenance. The information in this document may not be duplicated in any manner without the prior approval in writing from Wavetek.

WAVETEK SAN DIEGO, INC.
9045 Balboa Ave., San Diego, CA 92123
P. O. Box 85265, San Diego, CA 92138
Tel 619/279-2200 TWX 910/335-2007

Manual Revision: 1/90
Manual Part Number: 1300-00-0561

SAFETY FIRST

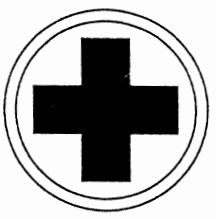

Protect yourself. Follow these precautions:

- Don't touch the outputs of the instrument or any exposed test wire carrying the output signals. This instrument can generate hazardous voltages and currents
- Don't bypass the power cord's ground lead with two-wire extension cords or plug adapters.
- Don't disconnect the green and yellow safety-earth-ground wire that connects the ground lug of the power receptacle to the chassis ground terminal (marked with ⏚ or ⏚)
- Don't hold your eyes extremely close to an RF output for a long time. The normally nonhazardous low-power RF energy generated by the instrument could possibly cause eye injury.
- Don't plug in the power cord until directed to by the installation instructions.
- Don't repair the instrument unless you are a qualified electronics technician and know how to work with hazardous voltages.
- Pay attention to the **WARNING** statements. They point out situations that can cause injury or death.
- Pay attention to the CAUTION statements. They point out situations that can cause equipment damage.

WARNING

This instrument normally contains a lithium battery. Where lithium is prohibited, such as aboard U.S. Navy ships, verify that the lithium battery has been removed.

Do not recharge, short circuit, disassemble, or apply heat to the lithium battery. Violating this rule could release potentially harmful lithium. Observe polarity when you replace the battery.

CONTENTS

SECTION 1 GENERAL

1.1 INTRODUCTION 1-1
1.1.1 List of Abbreviations 1-1
1.2 OPTIONS 1-1
1.3 SPECIFICATIONS 1-1
1.3.1 Waveforms (functions) 1-1
1.3.2 Operational Modes 1-1
1.3.3 Waveform Quality 1-2
1.3.4 Frequency 1-2
1.3.5 Amplitude 1-2
1.3.6 Offset 1-2
1.3.7 Outputs 1-2
1.3.8 Inputs 1-3
1.3.9 Displays 1-3
1.3.10 GPIB Programming 1-3
1.3.11 General 1-3
1.4 EQUIPMENT SUPPLIED 1-3
1.5 EQUIPMENT REQUIRED BUT NOT SUPPLIED 1-3

SECTION 2 PREPARATIONS

2.1 RECEIVING AND INSPECTING SHIPMENTS 2-1
2.2 RETURNING EQUIPMENT FOR REPAIR 2-1
2.3 INITIAL CHECKOUT 2-1
2.3.1 Introduction 2-1
2.3.2 Preparation for Use 2-1
2.3.3 Turn-on and Initial Checkout Procedure 2-2
2.3.4 Maintenance Messages and Errors 2-3
2.3.5 Performance Verification 2-3
2.4 PREVENTIVE MAINTENANCE 2-6
2.4.1 General 2-6
2.4.2 PM Procedures 2-6

SECTION 3 OPERATION

3.1 USE AND FUNCTION OF EACH CONTROL 3-1
3.1.1 Front Panel Controls, Indicators, and Connectors 3-1
3.1.2 Rear Panel Controls, Indicators, and Connectors 3-11
3.2 NORMAL OPERATION 3-12
3.2.1 Start-Up 3-12
3.2.2 Continuous Wave (CW) 3-12
3.2.3 Sweep Modulation 3-13
3.2.4 Amplitude Modulation (AM) 3-14
3.2.5 Frequency Modulation (FM) 3-15
3.2.6 Voltage Controlled Frequency (VCF) 3-17
3.2.7 GPIB (Remote) Operation 3-19
3.3 GPIB COMMAND STRUCTURE 3-20

CONTENTS (Continued)

SECTION 3 OPERATION (Continued)

3.3.1 Introduction 3-20
3.3.2 Model 288 Commands 3-20
3.3.2.1 Command Types 3-21
3.3.2.2 288 Command Syntax 3-22
3.3.2..3 288 Command List 3-23
3.3.3 Universal and Addressed Commands 3-26
3.3.4 Detailed Command Descriptions 3-26
3.3.5 Service Requests 3-28
3.3.6 Displaying Messages 3-29
3.3.7 GPIB Keys 3-30

SECTION 4 CIRCUIT DESCRIPTION

4.1 THE MODEL 288 4-1
4.2 DETAILED CIRCUIT DESCRIPTION 4-2
4.2.1 Motherboard Assembly 4-2
4.2.1.1 Microprocessor Circuit 4-2
4.2.1.2 GPIB Interface Circuit 4-2
4.2.1.3 Frequency Synthesizer Circuit 4-3
4.2.1.4 Internal Calibration Network Circuit 4-3
4.2.1.5 DAC/Sample and Hold Network Circuit 4-3
4.2.1.6 Secondary Input/Output Network Circuit 4-3
4.2.1.7 Relay Driver Network Circuit 4-4
4.2.1.8 Balanced Output Attenuator Network and Impedance Control Circuit 4-4
4.2.1.9 Unbalanced Output Attenuator Network and Impedance Control Circuit 4-4
4.2.1.10 Power Supplies Circuit 4-4
4.2.2 Front Panel 4-4
4.2.2.1 Control Knob 4-4
4.2.2.2 Display 4-4
4.2.2.3 Keyboard Circuit 4-5
4.2.2.4 LED Circuit 4-5
4.2.3 Function Generator 4-5
4.2.3.1 VCG Summing Amplifier 4-5
4.2.3.2 Sweep Generator 4-5
4.2.3.3 Symmetry Control 4-6
4.2.3.4 VCG Current Sources 4-6
4.2.3.5 High Frequency Compensation 4-6
4.2.3.6 Comparator 4-6
4.2.3.7 Frequency Range Switches 4-7
4.2.3.8 Capacitance Multiplier 4-7
4.2.3.9 Triangle Buffer 4-7
4.2.3.10 Auto Calibration 4-7
4.2.4 Phase Lock Loop Assembly 4-7
4.2.4.1 Phase Lock Loop 4-7
4.2.4.2 Sine Convertor 4-8
4.2.4.3 Amplitude Modulator 4-9
4.2.5 Output Assembly 4-9
4.2.5.1 Function Selector 4-9

CONTENTS (Continued)

SECTION 4 CIRCUIT DESCRIPTION (Continued)

4.2.5.2 Preamplifier 4-9
4.2.5.3 R-R2 Ladder 4-9
4.2.5.4 Power Amplifier 4-9
4.2.5.5 -20dB Attenuator 4-10
4.2.5.6 Unbalanced and Balanced Drivers 4-10
4.2.5.6 Peak Detector 4-10
4.2.6 Rear Panel 4-10

SECTION 5 CALIBRATION PROCEDURE

5.1 CALIBRATION 5-1
5.1.1 Auto Cal 5-1
5.1.2 Calibrate 5-1
5.2 AUTO CAL PROCEDURE 5-1
5.3 CALIBRATE PROCEDURE 5-1

SECTION 6 TROUBLESHOOTING

6.1 INTRODUCTION 6-1
6.2 FACTORY REPAIR 6-1
6.3 BEFORE STARTING 6-1
6.3.1 Inspection 6-1
6.4 TROUBLESHOOTING 6-1

SECTION 7 PARTS LISTS AND SCHEMATICS

7.1 DRAWINGS 7-1
7.1.1 Assembly Drawings 7-1
7.1.2 Schematics 7-1
7.1.3 Parts Lists 7-1
7.2 ADDENDA 7-1
7.3 ORDERING PARTS 7-1

APPENDIX A. PERFORMANCE VERIFICATION FORM A-1

ILLUSTRATIONS

SECTION 2 PREPARATION

Figure 2-1 Equipment Setup 2-2
Figure 2-2 Frequency Measurement Setup 2-4
Figure 2-3 VCG/FM Setup 2-4
Figure 2-4 Waveform/Sweep Verification 2-4
Figure 2-5 Balanced Output Verification 2-5
Figure 2-6 AM Verification 2-5
Figure 2-7 Sine Purity Measurement 2-5
Figure 2-8 Amplitude Accuracy 2-6
Figure 2-9 Phase Angle Measurement 2-6

SECTION 3 OPERATION

Figure 3-1 Operator's Controls, Indicators, and Connectors 3-1
Figure 3-2 Operator's Controls, Indicators, and Connectors (Rear View) 3-11
Figure 3-3 Continuous Wave Operation Control Setup 3-13
Figure 3-4 Sweep Modulation Operation Control Setup 3-14
Figure 3-5 Amplitude Modulation Operation Control Setup 3-15
Figure 3-6 Frequency Modulation Operation Control Setup 3-16
Figure 3-7 VCF Operation Control Setup 3-18
Figure 3-8. GPIB Wiring Connector Pinout 3-19
Figure 3-9 GPIB Interconnect Wiring 3-20
Figure 3-10 GPIB Operation Control Setup 3-21
Figure 3-11 Model 288 Status Byte and SRQ Mask 3-29

SECTION 4 CIRCUIT DESCRIPTION

Figure 4-1 Model 288 Signal Flow 4-1

SECTION 5 CALIBRATION PROCEDURE

Figure 5-1 Calibration Location 5-2
Figure 5-2 Square Wave Adjust Setup 5-2
Figure 5-3. Sine Wave Adjust Setup 5-3
Figure 5-4 Adjust Amplitude Setup 5-3
Figure 5-5 Adjust AM Setup 5-4
Figure 5-6. Adjust Phase Setup 5-4

SECTION 6 TROUBLESHOOTING

Figure 6-1 Instrument 6-4
Figure 6-2 Front Panel 6-6
Figure 6-3 Motherboard 6-8
Figure 6-4 Output Board 6-10
Figure 6-5 Rear Panel Assembly 6-12
Figure 6-6 Phase Lock Loop Board 6-14
Figure 6-7 Function Generator 6-16
Figure 6-8 Power Supply 6-18

Model 288 20 MHz Synthesized Function Generator

SECTION 1
GENERAL

1.1 INTRODUCTION

The Model 288 Signal Generator is a precision source of sine, triangle, and variable symmetry (ramp and pulse) waveforms for use in the installation and maintenance of radio receivers, transmitters, and other electronic equipment.

- Push button control for easy operation.
- Indicator lights give constant equipment status.
- Large, 16 character (fourteen segments/ character), display for all parameters.
- Programmed interface for remote operation.
- Programmable sine, triangle, square, and dc outputs.
- Variable symmetry provides pulse and ramp waveforms.
- Balanced and unbalanced outputs.
- Built-in calibration and fault analysis programs with extensive self-adjustment.
- Battery backup for saving system setups.

1.1.1 List of Abbreviations

This list identifies abbreviations and descriptions used in this manual that are not contained in MIL-STD-12. For abbreviations used in this manual but not contained in this list refer to MIL-STD-12.

Abbreviation	Term
dBc	dB relative to carrier
dBm	dB relative to 1 milliwatt
fc	carrier frequency
fm	modulating frequency
GPIB	General Purpose Interface Bus
VCF	Voltage Controlled Frequency
VFD	Vacuum Fluorescent Display

1.2 OPTIONS

001: Special 24-pin extender card when used in conjunction with Option 002 permits user access to test points and components on the various circuit cards with or without power being applied.

002: 40-pin Extender Card – Special 40-pin extender card when used in conjunction with Option 001 permits user access to test points and components on the various circuit cards with or without power being applied.

003: Rack Mounting Kit

1.3 SPECIFICATIONS

1.3.1 Waveforms (Functions)

Sine, triangle and square; variable symmetry for pulse and ramp waveforms; and dc.

1.3.2 Operational Modes

Continuous (CW): Synthesized frequency output with selected parameters.

Amplitude Modulation (AM): Same as CW except that maximum amplitude limited to 15 Vp–p (open circuit) and external signal modulates the amplitude of the selected output.

Frequency Modulation (FM and VCF): External input modulates the frequency output.

Sweep Modulation: All symmetrical waveforms swept over 3 decades from Start to Stop frequency (up or down) at programmed rate.

Rate: 100 ms to 100s.

Start/Stop Accuracy: < ± 3%.

Phase Lock: Frequency, stability and purity controlled by external reference. In all modes except FM and Sweep, generator will lock to applied external 20 Hz to 20 MHz sine wave.

Lock Phase Angle: ± 180° (± π radians).

Resolution: 1°.

Accuracy: 50 Hz to 10 MHz, ± (4° + 20 ns).

1.3.3 Waveform Quality

Sine Distortion: Unbalanced output, Total Harmonic Distortion.

2 mHz to 20 Hz: – 40 dB.
20 Hz to 100 kHz: – 46 dB.
100 kHz to 1 MHz: – 40 dB.
1 MHz to 6 MHz: – 34 dB.
6 MHz to 20 MHz: – 26 dB.

Time Symmetry: Programmable from 5% to 95% in 1% steps to 2 MHz, linearly decreasing to 50% fixed at 20 MHz.

Accuracy: < ± (2% + 20 ns). At 50%, < ± (0.1% + 20 ns).

Square Wave Transition Time: < 13 ns, 10% to 90%, full output, from 50Ω source into 50Ω load.

Square Wave Aberrations: Overshoot and ringing < (5% + 20 mV) of p–p amplitude.

Triangle Linearity: From 10% to 90% points:

2 mHz to 100 kHz: ± 1%.
100 kHz to 2 MHz: ± 2%.
2 MHz to 5 MHz: ± 10%.

1.3.4 Frequency

Range: 2 mHz to 20 MHz.

Synthesized: 20 Hz to 20 MHz.
600Ω or Balanced Output: 2 mHz to 1 MHz.
Amplitude Modulation: 0.1 Hz to 20 MHz.

Resolution: 3 1/2 digits (200 to 2000 counts in the display).

Accuracy: Percent of setting:

2 mHz to 20 Hz and FM or Sweep Modes: ± 3%.
20 Hz to 20 MHz: ± 0.05%.

Stability

Within 10 Minutes:
≤ 20 Hz and FM or Sweep Modes: ± 0.1%
> 20 Hz: ±0.001%.
Within 24 Hours:
≤ 20 Hz and FM or Sweep Modes: ± 0.5%
> 20 Hz: ± 0.002%.
Line Voltage Variation:
For ± 10% line variation and ≤ 20 Hz and all frequencies in FM and Sweep Modes: ± 0.1%.
> 20 Hz: ± 0.001%.
Temperature:
≤ 20 Hz and all frequencies in FM and Sweep Modes: < 100 ppm/°C.
> 20 Hz: < 2 ppm/°C

Output level Variation:
≤ 20 Hz and all frequencies in FM and Sweep Modes: ± 0.1%
> 20 Hz: ± 0.001%.

1.3.5 Amplitude

Range:

Open Circuit: 2 mVp-p to 30 Vp-p.
Impedance Terminated: 1 mVp-p to 15 Vp-p.

Resolution: With no offset:

2 mVp-p to 20 Vp-p Open Circuit, (1 mVp–p to 10 Vp–p Terminated): 3 digits.
To 30 Vp-p (15 Vp-p Terminated): 3 1/2 digits.

Accuracy: % of Setting:

Sine :
To 999 mVp-p: ± 2% + 2 mV.
To 30 Vp-p: ± 2% + 10 mV.
Triangle and Square :
To 999 mVp-p: ± 3% + 4 mV.
To 30 Vp-p: ± 3% + 20 mV.

Flatness: To accuracy percent of setting:

For 100 kHz to 1 MHz: Additional ± 2%.
To 5 MHz: Additional ± 3%.
To 20 MHz: Additional ± 10%.

1.3.6 Offset

Range

± 10V (± 5V terminated).

Resolution

3 digits; may be reduced if both offset and waveform amplitude are programmed.

Accuracy

0.5V to 10V: ± 1% of setting + 20 mV.
1 mV to 500 mV: ± 1% of setting + 5 mV.

1.3.7 Outputs

Sync (Trigger) Output

Pulse at frequency of and in phase with square wave.
Low Level: < 0.4V.
High level: > 1.8V into 50Ω.
10-90% Transition Times: < 13 ns.

Horizontal Output

Ramp indicates sweep position.
Level: Fixed 0V to approx. + 5V (open circuit).
Source Impedance: 600Ω.

Unbalanced Output

Source Impedance:
To 1 MHz: 600Ω ± 1%.
To 20 MHz: 50Ω ± 1% or 75Ω ± 1%.

Balanced Output
Banana jacks for differential output of sine wave; universal binding post for common.
Source Impedance:
To 1 MHz: 135Ω ± 0.5% or 600Ω ± 1%
Output Unbalance:
10 Hz to 1 MHz: < 1% referenced to 1 kHz.

1.3.8 Inputs

External Trigger/Freq In
Input Impedance: 10 kΩ ± 2%.
Range (Sine Wave): 600 mVp-p to 30 Vp-p (into 10 kΩ), 20 Hz to 20 MHz.

Modulation In
Input Impedance: 10 kΩ ± 2%.
Bandwidth: DC to 100 kHz
Max Level: ± 20 Vp-p (into 10 kΩ).
FM Mode: ± 10V gives 1000:1 change. Apply as DC for VCF or AC for FM.
AM Mode: 4 Vp-p into 10 kΩ gives 100% AM.

1.3.9 Displays

Amplitude: V or mV peak-to-peak or peak. For symmetrical waveforms with no offset, displays amplitude in RMS or dBm.
Resolution: 100 to 999 counts or 0.1 dBm.
Offset: V or mV.
Resolution: 100 to 999 counts.
Frequency Including Sweep Start/Stop): mHz, Hz, kHz or MHz.
Resolution: 3 1/2 digits.
Period: sec, ms, µs or ns.
Resolution: 4 digits.
Symmetry: In %.
Resolution: ≥ 10 counts.
Resolution: resolves in 1° (deg) increments, displays radians in 4 digits.
Sweep Time: sec or ms with ≥ 100 counts.

1.3.10 GPIB Programming

Address: 0-30 selectable, battery backed.

Subsets: SH1, AH1, SR1, RL1, PP0, DC1, DT0, C0, T6, L4, TE0,LE0 and E1.

1.3.11 General

MIL-T-28800 Class 5 qualified.
Temperature Range: 0 to +50°C, - 40 to +70°C for storage.
Warm-up Time: 20 minutes for specified operation at 25 ± 10°C ambient temperature.
Humidity: 0 to +25°C at 95% RH, 0 to +40°C at 75% RH, and 0 to 50°C at 45% RH.
Altitude: 3050m (10,000 ft.); non-operating to 12,000m (40,000 ft.).
Vibration: 0.013 in. from 5 to 55 Hz (2g acceleration at 55 Hz).
Shock: Non-operating; 30g, 11 ms half-sine.
Electromagnetic Compatibility: MIL-STD-461A Notice 4 (EL). Emission and susceptibility requirements of CE02, CE04, CS02, CS06, RE02, RE02.1 and RS03.
Dimensions: 35.6 cm (14.00 in.) wide, 13.3 cm (5.219 in.) high and 43.2 cm (17.00 in.) deep.
Weight: Approximately 11.4 kg (25 lb) net; 13.6 kg (30 lb) shipping.
Power: 90 to 108, 108 to 126, 198 to 231, or 216 to 252 Vrms; 48 to 440 Hz; 1 phase; < 60 VA.

1.4 EQUIPMENT SUPPLIED

The Model 288 is supplied with a shielded power cord, spare fuse, and manual.

1.5 EQUIPMENT REQUIRED BUT NOT SUPPLIED

All items required for the Model 288 are supplied.

SECTION 2
PREPARATION

2.1 RECEIVING AND INSPECTING SHIPMENTS

Use the following steps to inspect a shipment of Wavetek equipment.

1. **Inspect the shipment.** Before unpacking the instrument, your receiving clerk should have checked the shipment for missing boxes, inspected each box for damage, and if necessary, have had the driver describe the box damage and list shortages on the delivery bill. If you find unreported shortages or damage, notify the shipper before further unpacking.
2. **After unpacking the boxes.** Save all of the packing material.
3. **Inspect the equipment for damage.** Inspect it carefully, regardless of the condition of the shipping boxes.
4. **If necessary, file a damage claim.** If any damage is found, call the shipper immediately (within 10 days) and start the claim process.
5. **Call Wavetek.** Call Wavetek's Customer Service department (619-279-2200) and tell them that the equipment arrived damaged.

2.2 RETURNING EQUIPMENT FOR REPAIR

Use the following steps when returning Wavetek equipment to Wavetek for repair.

1. **Save the packing material.** Always return the equipment to Wavetek in its original packing material and boxes. If you use inadequate packing material, you will have to pay to repair any shipping damage as carriers will not pay claims on incorrectly packed equipment.
2. **Call Wavetek for a Return Authorization.** Wavetek's customer service representative will ask for the name of the person returning the equipment, telephone number, company name, equipment type, and a description of the problem.

2.3 INITIAL CHECKOUT

2.3.1 Introduction

The following paragraphs provide the information required to prepare, turn-on, and checkout the Model 288 Signal Generator in the local mode. Information required for remote mode is provided in Section 3. Table 2-1 lists maintenance messages and error codes along with the probable cause and corrective action. Numbers shown in parentheses refer to keyed items in figure 2-1.

2.3.2 Preparation for Use

WARNING

The Model 288 Signal Generator is equipped with a three-wire power cable. When connected to a grounded AC power receptacle, this cable grounds the instrument front panel and cabinet. Do not use extension cords or AC adapters without a ground.

1. Verify that the front panel power switch (1) is set to Off .
2. Verify the the voltage selection card (5) on the rear panel matches the line voltage available in your area. Connect the power cable (6) to ac power connector (7) on rear panel.

Table 2-1. Voltage Selection Card Position and Fuse Size.

Input Voltage	Voltage Selection Card	Fuse
90 to 108	100	3/4 amp, Slo-Blo
108 to 126	120	3/4 amp, Slo-Blo
198 to 231	220	3/8 amp, Slo-Blo
216 to 252	240	3/8 amp, Slo-Blo

WARNING

This instrument uses an internal battery that contains 0.2 grams of Lithium. Do not charge or short this battery. A hazard of explosion and or contamination exists.

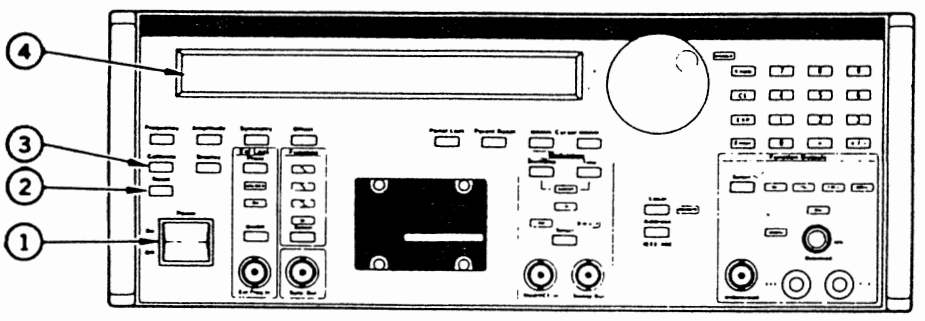

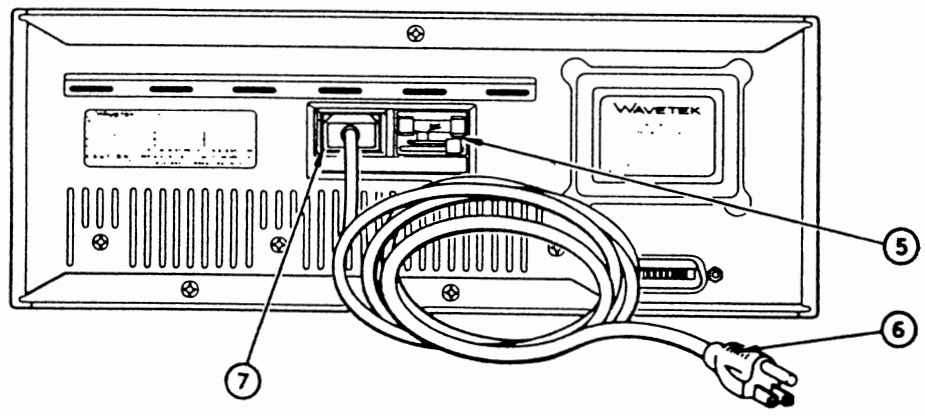

Figure 2-1. Equipment Setup

2.3.3 Turn-on and Initial Checkout Procedure

1. Verify that only the power cable (6) is connected to the Model 288. All other cables should be disconnected.
2. Set the Power On/Off switch (1) from Off to On. Verify that the Model 288 display (4) indicates "WAVETEK 288".

   NOTE

   If a maintenance message or error code is shown in display, refer to table 2-2 for probable cause and corrective action.

3. Press the Reset key (2). Verify that the following front panel conditions exist:

Display:	RESET (VX.XX)
Function:	Sine indicator ON
Modulation:	CW indicator ON
Function Outputs:	50Ω and UNBAL indicators ON
All other displays and indicators:	Off
Frequency:	FREQ 1 KHZ, PER 1 MILLISEC*
Amplitude:	AMPL 5VPP, AMPL 2.5VP, AMPL 1.77VRMS, AMPL 18DBM
Display:	INTENSITY 16*
Symmetry:	SYMM 50 PCT*
Phase:	PHASE 0 DEG/PHASE 0 RAD*
Offset:	DCOFF 0 VDC*
Start/Stop:	START 2 HZ/STOP 2 KHZ*
Time:	SWPTIME 1 SEC, SWPRATE 1 HZ*
Address:	ADDRS 00 to 30*

* Default value. Press key to display value(s).

4. Allow the Model 288 Signal Generator 20 minutes of warm-up time.

NOTE

- *Whenever the power cable has been disconnected, or the power switch has been in the Off position, the Model 288 requires a 20 minute waiting/warm-up period before the Calibrate key can be selected. If the Calibrate key is selected before 20 minutes, the display will indicate "WAIT XX.XX MIN" to show the time remaining.*

- *The Calibrate key performs only a 20 second self-check, and does not replace standard maintenance calibration.*

5. Press the Calibrate key (3). Verify that the display (4) indicates "CALIBRATING".
6. Wait approximately 20 seconds. Verify that the display (4) indicates "AUTOCALIBRATED".
7. If all above conditions are correct, the signal generator is ready for operation. If indication is incorrect, notify your maintenance department or return the instrument to Wavetek for repair.

2.3.4 Maintenance Messages and Error Codes

Some internal circuit failures cause maintenance messages or error codes to appear in the display. See table 2-2 for a list of possible maintenance messages/error codes and probable cause.

Table 2-2. Maintenance Messages and Error Codes.

Display	Probable Cause	Corrective Action
Err xxxxxxxxx	Improper self-check/unit	Press Calibrate key. If identical failure error is displayed, refer to section 6 (Troubleshooting Procedure). If a different error displayed, press the Calibrate key again. If "AUTO-CALIBRATED" is displayed, the unit is operational.
Low batt x.xxx v	Internal battery voltage low.	Unit is available for immediate operation. Replace the battery.
Cal Required	Internal battery dead.	Unit has lost it's calibration data but can be used after performing and passing AutoCal. Instrument may not meet all specifications.

2.3.5 Performance Verification

Performance verification tests the operation of every selectable parameter and input/output connector and to verify correct operation within each major specification. This verification is necessary only when there is a problem that is not identified by the AutoCal tests. All data obtained during the performance verification should be permanently recorded for future reference. The Performance Verification Form in Appendix A can be used as a master to generate additional copies as needed. Perform initial checkout procedures shown in paragraphs 2.3.2 and 2.3.3 prior to starting the performance verification.

Required Test Equipment - Table 5-2 lists the test equipment required to perform the performance verification procedure. Always keep test equipment interconnecting cables as short as possible.

Table 5-2. Required Test Equipment

Test Equipment	Recommended Model
Scope	Tektronix 2465 or equivalent.
THD Analyzer	Hewlett Packard 8903B or equivalent.
Digital Multimeter (DMM)	Not Critical
Signal Generator (Signal Source)	Not Critical

Frequency Range

1. Reset the Model 288
2. Connect the Model 288 and test equipment as shown in figure 2-2.

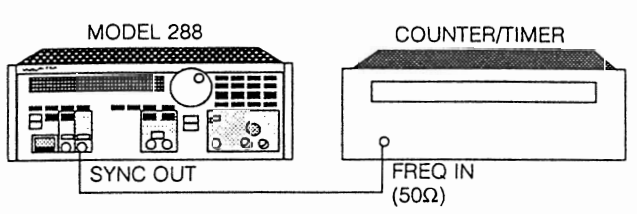

Figure 2-2. Frequency Measurement Setup

3. Program frequency to the top frequency of each of the top six decade frequency ranges and check synthesized frequency accuracy per the table in recorded data: RECORD.
4. Select FM Mode and repeat step 3 testing the uniocked frequency accuracy on all 10 ranges: RECORD.

Frequency Resolution

1. Reset the Model 288
2. Connect the Model 288 and test equipment as shown in figure 2-2.
3. Vary the synthesized frequency in steps over the 1999 Hz to 222 Hz frequency range per Appendix A - Performance Verification Form and measure the frequency resolution: RECORD.

Symmetry

1. Reset the Model 288
2. Connect the Model 288 and test equipment as shown in figure 2-2.
3. Program time symmetry in steps per Appendix A - Performance Verification Form and measure symmetry accuracy: RECORD.

VCF/FM

1. Reset the Model 288
2. Connect the Model 288 and test equipment as shown in figure 2-3.
3. Program the signal source for 0 Volts dc output. Program the Model 288 for FM mode and measure the 1kHz ± 3% frequency: RECORD.

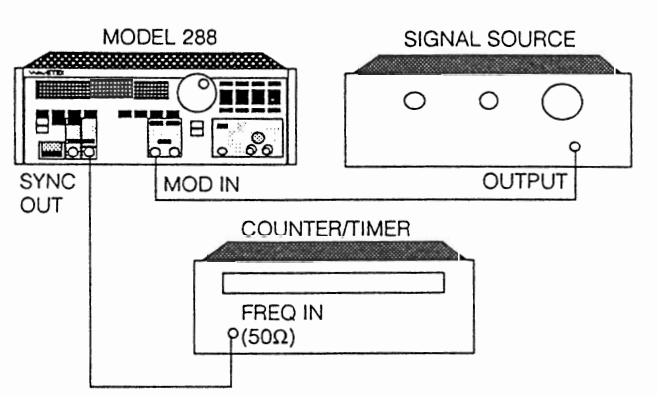

Figure 2-3. VC/FM Setup

4. Program the signal source for +5 Volts dc output into 10 kΩ load. Verify frequency is 2kHz ± 5% ([± 3% unlocked accuracy] + [±2% uncertainty of 10 kΩ input impedance]): RECORD.

Waveforms and Sweep

1. Reset the Model 288
2. Connect the Model 288 and test equipment as shown in figure 2-4.

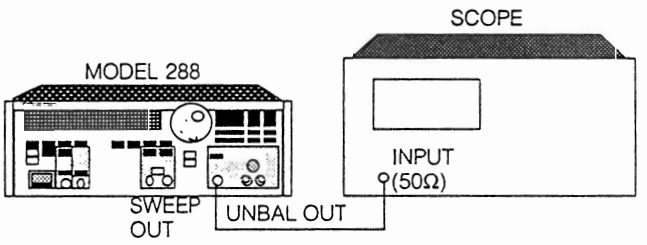

Figure 2-4. Waveforms/Sweep Verification

3. Program the Model 288 through the sine, triangle, square and dc functions while observing them for normal appearance on the scope: yes/no RECORD.
4. Program the Model 288 to start sweeping and observe a normal 100 Hz to 10 kHz, 1 second sweep: yes/no RECORD.
5. Remove the cable at Unbal Out and connect it to Sweep Out and observe the 1 second sweep ramp (600Ω impedance): yes/no RECORD.

Pulse

1. Reset the Model 288
2. Connect the Model 288 and test equipment as shown in figure 2-4. Verify 50Ω source into 50Ω feed-thru termination.
3. Program the Model 288 for 10 MHz square wave and measure rise time, fall time, positive-going transition peak-to-peak aberration in percent and negative-going transition peak-to-peak aberration in percent: RECORD.
4. Disconnect the cable at Unbal Out and connect it to the Sync (trigger) Out. Measure peak-to-peak amplitude, rise time and fall time: RECORD.

Outputs

1. Reset the Model 288
2. Connect the Model 288 and test equipment as shown in figure 2-4.
3. With the Unbal out connected to the scope, program the Model 288 for 50Ω, 75Ω and 600Ω output impedance and verify normal waveform appearance and amplitude into matched feed-thru terminations: yes/no RECORD.
4. Connect the Model 288 and test equipment as shown in figure 2-5.

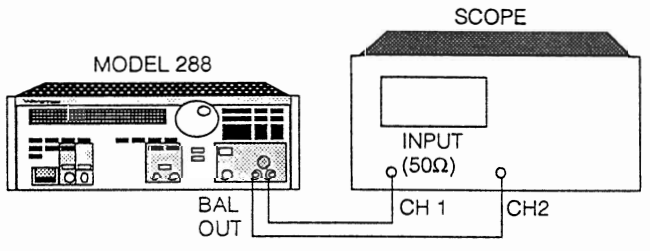

Figure 2-5. Balanced Output Verification

5. Sync the scope internally from channel 1 only, place a 135Ω load resistor across the Bal Out terminals and program the Model 288 for 135Ω balanced output. Observe channel 1 and 2 sine waves 180° out of phase on the scope and each at 1/2 the amplitude of the Unbal Out sine wave of step 3: yes/no RECORD.
6. Change the loading resistor and the Model 288 source impedance to 600Ω. Observe same scope display as in the previous step: yes/no RECORD.

Amplitude Modulation

1. Reset the Model 288
2. Connect the Model 288 and test equipment as shown in figure 2-6.

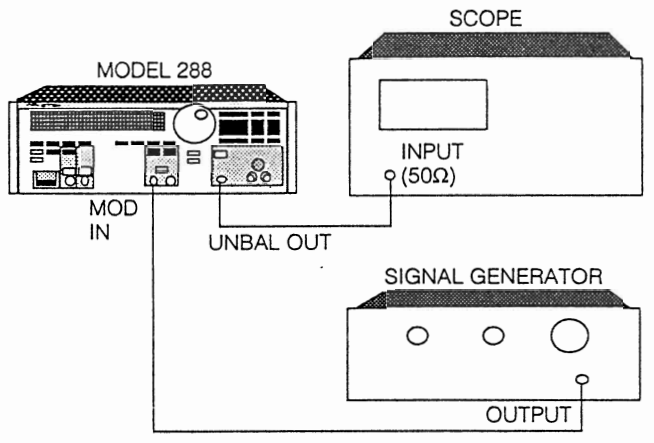

Figure 2-6 AM Verification

3. Program the signal generator for a 1kHz, 2Vp-p open circuit sine wave and the Model 288 for 100 kHz, AM mode. Observe a normal amplitude modulation of approximately 50% on the scope: yes/no RECORD.

Sine Wave Purity

1. Reset the Model 288
2. Connect the Model 288 and test equipment as shown in figure 2-7.

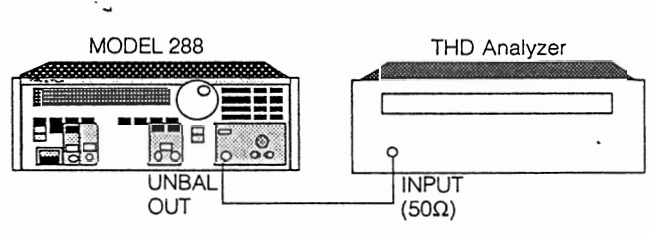

Figure 2-7. Sine Purity Measurement

3. Measure the sine total harmonic distortion in dB: RECORD.

Amplitude Accuracy

1. Reset the Model 288
2. Connect the Model 288 and test equipment as shown in figure 2-8.

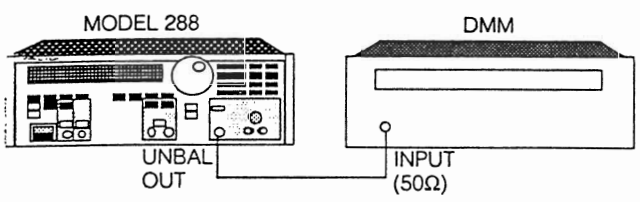

Figure 2-8. Amplitude Accuracy

3. Program the Model 288 sine amplitude to the unattenuated amplitude values per Appendix A - Performance Verification Form. Measure the true rms amplitude at each step: RECORD.
4. Repeat step 3 for the square wave: RECORD.
5. Repeat step 3 for the triangle wave: RECORD.

DC Output and Attenuator Accuracy

1. Reset the Model 288
2. Connect the Model 288 and test equipment as shown in figure 2-8.
3. Program the Model 288 dc offset to the attenuated values per Appendix A - Performance Verification Form. Measure the dc voltage at each step: RECORD.

External Lock

1. Reset the Model 288
2. Connect the Model 288 and test equipment as shown in figure 2-9.
3. Measure the 1kHz frequency of the Model 288: RECORD.
4. Program the signal source for a 1010 Hz, 5Vp-p sine wave. Program the Model 288 to externally lock and measure the frequency of both the signal generator and the Model 288: RECORD.
5. Program the Model 288 locking phase angle between ±180° per Appendix A - Performance Verification Form. Measure the phase angle at each step: RECORD.

Front Panel

Observe the display and annunciators while manually operating the various keys and check for normal appearance and operation: yes/no RECORD.

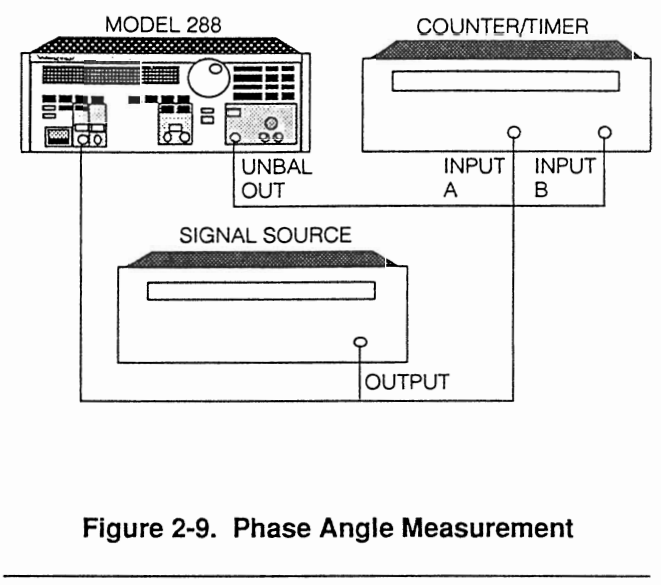

Figure 2-9. Phase Angle Measurement

2.4 PREVENTIVE MAINTENANCE

2.4.1 General

To be sure that your equipment is always ready for operation, you must perform scheduled preventive maintenance. When you are doing any PM or routine checks, keep in mind the WARNINGS and CAUTIONS about electrical shock and bodily harm.

2.4.2. PM Procedures.

No tools or equipment are required for operator preventive maintenance. Cleaning materials required are soap, water, and rags.

PM is limited to routine checks as follows:

- Cleaning
- Dusting
- Wiping
- Checking for frayed cables
- Storing items not in use
- Covering unused receptacles

Perform these routine checks anytime you see they must be done.

SECTION 3
OPERATION

3.1 USE AND FUNCTION OF EACH CONTROL

Paragraphs 3.1.1 and 3.1.2 describe all of the operator "Controls, Indicators, and Connectors" for the Model 288 signal generator.

3.1.1 Front Panel Controls, Indicators, and Connectors.

Due to the large number of controls and indicators on the front panel, it is necessary to separate the front panel into five different sections. Figure 3-1 shows the location of each section of the front panel (called views) used in table 3-1.

Table 3-1 shows each section (views A thru E) of the front panel as an enlarged view immediately followed by the description of the controls, indicators, and connectors for that view.

The rear panel (paragraph 3.1.2) is shown in figure 3-2 and described in table 3-2.

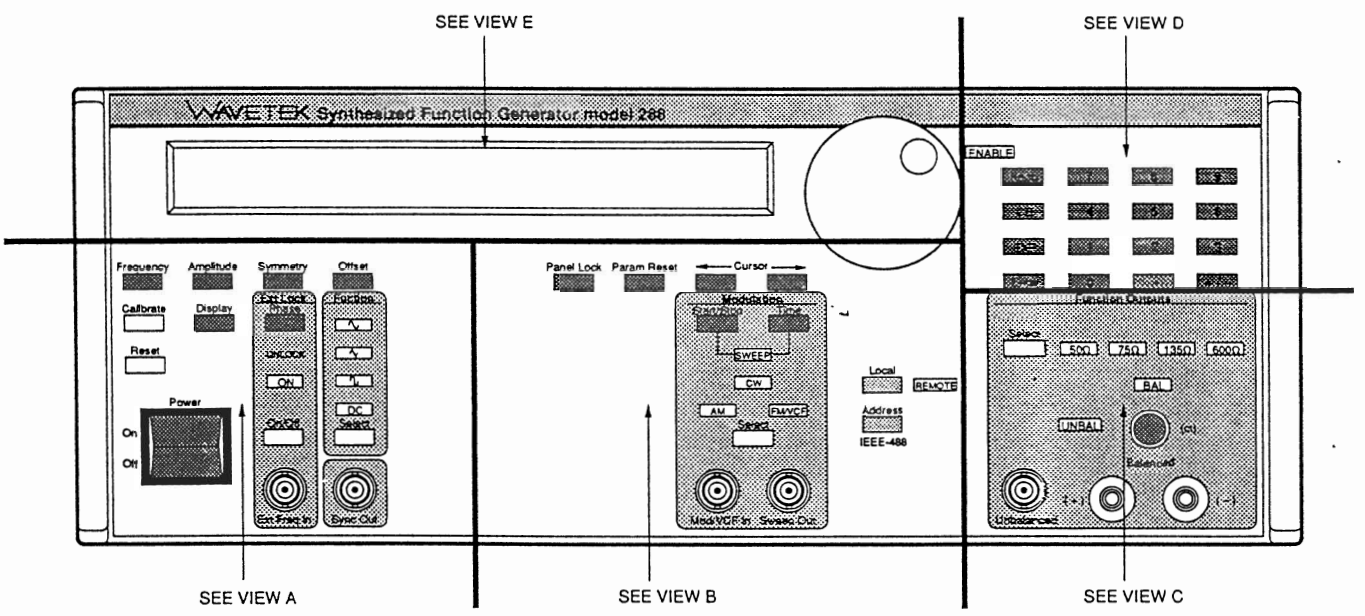

Figure 3-1. Operator's Controls, Indicators and Connectors (front view).

Table 3-1. Front Panel Controls, Indicators, and Connectors

Key	Control, Indicator or Connector	Function

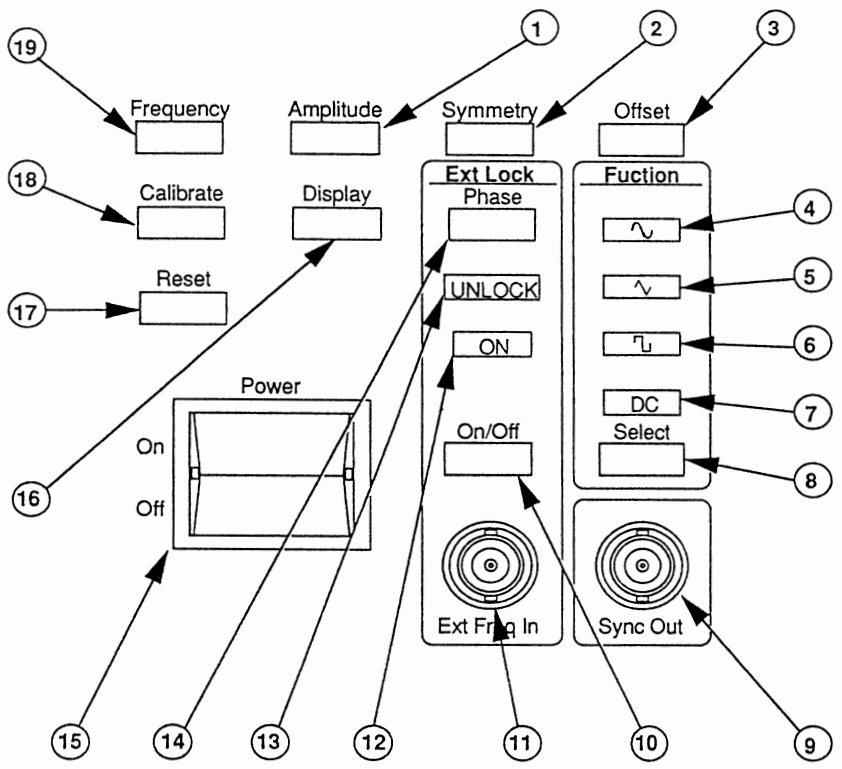

VIEW A

1	Amplitude key	Used to display and enter output amplitude. Displayed units in Vpp, Vp, Vrms, or dBm. To enter a new value, press key until desired units are displayed. Use Cursor keys and control Knob or Numeric and Enter keys to enter a new value. All units reflect new value. Range is from 0.001 to 15.0 Vpp, 0.0005 to 7.5 Vp, 0.0004 to 5.3 Vrms, and –56.0 dBm to +27.5 dBm. Defaults to 5 Vpp. Restrictions: If the DC Offset is not 0 Vdc or symmetry not 50%, can select only units of Vpp and Vp with decreased range.
2	Symmetry key	Used to display and enter output waveform symmetry from 5% to 95%. Press to display the present value. Use the control Knob or the Numeric and Enter keys to enter a new value in 1% increments. Defaults to 50%. Restrictions: Fixed at 50% when either BAL, FM/VCF, or Sweep is selected. Linearly increases (from 5%) and decreases (from 95%) at frequencies above 2 MHz to 50% at 20 MHz.

Table 3-1. Front Panel Controls, Indicators, and Connectors (Continued)

Key	Control, Indicator or Connector	Function
3	Offset key	Used to display and enter DC offset value from +5.000 to –5.000V. In DC function, controls signal output polarity and level. In sine, triangle, and square functions it controls reference level of output waveform. Press to display the present value. Use the Cursor keys and control Knob or the Numeric and Enter keys to enter a new value. Defaults to 0 Vdc. **Restrictions:** Fixed at 0 Vdc when BAL selected. When Sweep, CW, and FM/VCF are selected, range limited at amplitudes ≥ 5 Vdc. When AM is selected, range limited at amplitudes ≥ 2.5 Vdc.
4	∿ (Sine) indicator	When ON, indicates that Sine function is active. Provides an operator defined sine waveform from Unbalanced or Balanced output connectors. To activate, press the Function Select key until the indicator lights. **Restrictions:** Locked in when BAL and/or AM selected.
5	⩘ (Triangle) indicator	When ON, indicates that Triangle function is active. Provides an operator defined triangle waveform from Unbalanced connector. To activate, press the Function Select key until indicator lights. **Restrictions:** Locked out when BAL and/or AM selected.
6	⊓⊔ (Square) indicator	When ON, indicates that Square function is active. Provides an operator defined square waveform from Unbalanced connector. To activate, press the Function Select key until indicator lights. **Restrictions:** Locked out when BAL and/or AM selected.
7	DC indicator	When ON, indicates that DC function is active. Provides an operator defined dc voltage level from Unbalanced connector. To activate, press the Function Select key until indicator lights. **Restrictions:** Locked out when BAL, AM, and/or phase lock ON is selected.
8	Function Select key	Used to select Sine, Triangle, Square, or DC function. Press until the desired indicator lights. **Restrictions:** See Sine, Triangle, Square, and DC indicators.
9	Sync Out connector	BNC female connector with capacity of driving 50Ω. Provides a 1.0 to 2.5 Vpp TTL pulse at output waveform frequency. Signal is used when synchronizing the signal generator to any external equipment. Signal symmetry is same as square wave. Signal is "in phase" with square wave but leads sine and triangle waveforms by 90°. **Restrictions:** Signal not present in DC function.

Table 3-1. Front Panel Controls, Indicators, and Connectors (Continued)

Key	Control, Indicator or Connector	Function
10	Ext Lock On/Off key	Used to select the external reference frequency signal connected to the Ext Freq In connector. OFF activates internal frequency reference signal. ON deactivates internal frequency reference and an external signal must be used. Press for on (Ext Lock ON indicator on), press for off (Ext Lock ON indicator off). **Restrictions:** Locked out when frequency < 20 Hz, and when DC, Sweep, and/or FM/VCF is selected.
11	Ext Freq In connector	BNC female connector with 10kΩ input impedance accepts 20 Hz to 20 MHz sine wave at from 600 mVrms to 30 Vpp signal. Frequency must be set to Model 288 output frequency ± 3%. Used to connect an external frequency reference to the Model 288 for increased accuracy and stability.
12	Ext Lock On indicator	When ON, indicates that signal connected to Ext Freq In connector is to be used for reference frequency. Does not indicate signal is present at Ext Freq In connector. See Ext Lock ON/OFF key description for further explanation.
13	UNLOCK indicator	When flashing, indicates a problem with internal or external frequency reference signal, causing the signal generator output frequency to be inaccurate. Normally off. When ON continuously, indicates that current instrument set-up does not allow locking to a frequency reference.
14	Phase key	Used to display and enter the output signal phase. Phase relationship compared to an external signal connected to the Ext Freq In connector. Displayed units are in +/– degrees or in + /– radians. To enter a new value, press the key until desired units are displayed. Use Cursor keys and control Knob or the Numeric and Enter keys to enter a new value. Both units reflect new value. Range from +180° to –180° or +3.14 to –3.14 radians. Defaults to 0°.
15	Power switch	Used to set voltage to Model 288 on or off. ON when button rocked up, OFF when button rocked down.
16	Display key	Used to show and adjust the intensity of the display from 00 to 31. 31 is brightest setting. Press to display the present value. Use control Knob or the Numeric and Enter keys to enter a new value. Defaults to 16.
17	Reset key	Used to set the Model 288 parameters to the default condition (para 2-6). The GPIB address remains unchanged. Press to activate.
18	Calibrate key	Used to perform the Model 288 Self-test and Auto-Calibration. Performs a 20 second functional check and fine tune of certain internal circuits. The display will indicate "CALIBRATING" during the Self-test, and "AUTOCALIBRATED" after a successful Self-test. Press to activate. **Restrictions:** Requires 20 minute warm-up each time power is applied.

Table 3-1. Front Panel Controls, Indicators, and Connectors (Continued)

Key	Control, Indicator or Connector	Function
19	Frequency key	Used to display and enter output frequency/period. Displayed frequency units in MHz, kHz, Hz, and mHz. Displayed period units in SEC and ms. To enter a new value, press key until desired units are displayed. Use the Cursor keys and control Knob or the Numeric and Enter keys to enter a new value in Hz or SEC. Both units reflect new value. Range is from 0.002 Hz to 20.00 MHz or 500.0 SEC to 0.00005 ms. Defaults to 1.000 kHz. **Restrictions:** Frequencies > 2 MHz are limited when symmetry is not 50%. Frequencies < 20 Hz are locked out when phase lock ON is selected. Frequencies > 1 MHz locked out when BAL, 135Ω, and/or 600Ω is selected. Frequencies < 0.1 Hz locked out when AM selected.

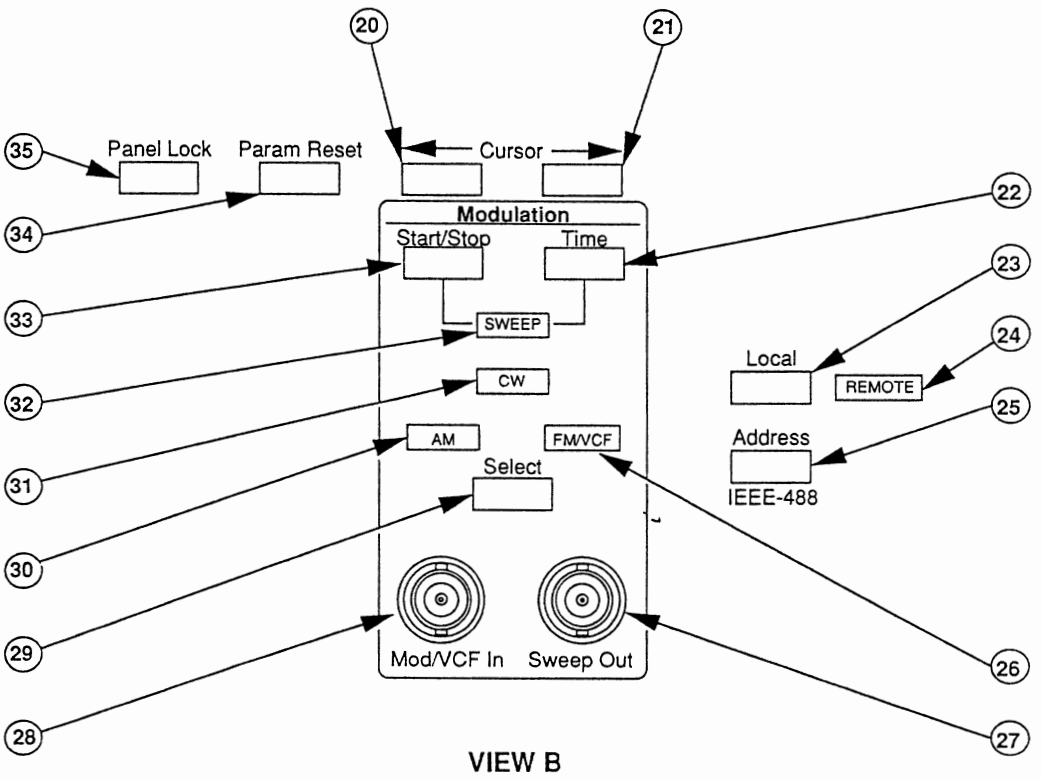

VIEW B

20	<— Cursor key	Used to change display setting. Moves selectable digit to left through all possible display combinations. Press key until desired digit flashes, then use the control Knob to change value. **Restrictions:** Not used for Display, Phase, Symmetry, and Address keys.

Table 3-1. Front Panel Controls, Indicators, and Connectors (Continued)

Key	Control, Indicator or Connector	Function
21	Cursor —> key	Used to change display setting. Moves selectable digit to right through all possible display combinations. Press key until desired digit flashes, then use control Knob to change value. **Restrictions:** Not used for Display, Phase, Symmetry, and Address keys.
22	Time key	Used to display and enter the time or rate for one complete sweep. Only used during sweep modulation. Displayed units are in SEC or Hz. To enter a new value, press key until desired units are displayed. Use the Cursor keys and control Knob or the Numeric and Enter keys to enter a new value. Both units reflect new value. Range is from 0.1 to 100 SEC or 10 to 0.01 Hz. Defaults to 1 SEC.
23	Local key	Used to return the Model 288 to front panel control from the remote (GPIB) mode. Front panel displays "GOTO LOCAL". Press to activate. **Restrictions:** Will not select if Local Lockout set by external Controller during remote operation.
24	REMOTE indicator	When ON, indicates that Model 288 is in remote (GPIB) operation using the external Controller. Instrument settings can be queried but not changed.
25	Address key	Used to display and enter IEEE-488 (GPIB) address from 00 to 30. Press to display present value. Use control Knob or the Numeric and Enter keys to enter a new value. Defaults to 09 when (34) is pressed. **Restrictions:** Will not select if Local Lockout is set by an external Controller during remote operation.
26	FM/VCF indicator	When ON, indicates that FM/VCF modulation mode is active. Provides an operator defined frequency modulated waveform from Unbalanced or Balanced output connectors. An external signal source connected to MOD/VCF IN connector is required for FM/VCF operation. External signal amplitude of 0 to 10 Vpp controls deviation. External signal frequency of DC to 100 kHz controls rate. To activate, press Modulation Select key until indicator lights. **Restrictions:** Locked out when symmetry not 50% and/or when Phase Lock ON is selected.
27	Sweep Out connector	BNC female connector with 600Ω output impedance. Provides a 0 to +5V or +5 to 0V linear ramp voltage from start to stop frequency at sweep time selected. Signal is used for sweeping an external signal source. **Restrictions:** Signal only present during sweep modulation mode.
28	Mod/VCF In connector	BNC female connector with 10kΩ input impedance. Used to connect an externally supplied DC to 100 kHz signal for modulation of Unbalanced and Balanced output signals. Maximum signal input is 20 Vpp. Input amplitude controls AM depth and FM/VCF deviation. Input frequency controls AM and FM/VCF modulation rate.

Table 3-1. Front Panel Controls, Indicators, and Connectors (Continued)

Key	Control, Indicator or Connector	Function
29	Modulation Select key	Used to select Sweep, CW, AM, or FM/VCF modulation. Press until desired indicator lights. **Restrictions:** See Sweep, CW, AM, or FM/VCF indicators.
30	AM indicator	When ON, indicates that AM modulation mode is active. Provides an operator defined amplitude modulated waveform from Unbalanced or Balanced output connectors. An external signal source connected to MOD/VCF IN connector is required for AM operation. External signal amplitude of 0 to 4 Vpp controls depth. A 4 Vpp provides 100% depth. External signal frequency of DC to 100 kHz controls rate. To activate, press Modulation Select key until indicator lights. **Restrictions:** Locked out when the Triangle, Square, or DC function is selected, frequency is set to < 0.1 Hz, and/or the sum of amplitude (Vpp) and Offset (Vdc) exceeds 7.5.
31	CW indicator	When ON, indicates that CW modulation mode is active. Provides an operator defined continuous waveform from Unbalanced or Balanced output connectors. To activate, press Modulation Select key until indicator lights. Defaults to CW. **Restrictions:** Locked in when Triangle, Square, Ext Lock ON. Amplitude, and/or symmetry selections lock out sweep, AM, and FM/VCF modes.
32	SWEEP indicator	When ON, indicates that sweep modulation mode is active. Provides an operator defined swept waveform from Unbalanced or Balanced output connectors. To activate, press Modulation Select key until indicator lights and "SWEEP RUN" is shown on display. **Restrictions:** Locked out when symmetry not 50%, when Ext Lock ON selected, and/or when the combination of Start/Stop frequencies exceed range limits.
33	Start/Stop key	Used to display and enter the start and stop frequencies for sweep modulation mode. Displayed units in mHz, Hz, kHz, and MHz. Press for start frequency, and again for stop frequency. If Sweep indicator is on, pressing again will cause swept output (display indicates "SWEEP RUN"). To enter a new value, press key until desired parameter is displayed. Use the Cursor keys/control Knob or the Numeric and Enter keys to enter a new value. Range from 2 mHz to 20 MHz. Defaults are 2.0 Hz start and 2 kHz stop. **Restrictions:** If sweep is selected while entering start and stop frequencies, it will automatically change value entered first to provide sweep within acceptable range limits.
34	Param Reset key	Used to reset only parameter currently shown in the display to default value. Does not change non-displayed parameters. Press to activate.

Table 3-1. Front Panel Controls, Indicators, and Connectors (Continued)

Key	Control, Indicator or Connector	Function
35	Panel Lock key	Used to disable all front panel key selections, except the Power switch. Does not affect signals at output connectors. Press to activate, press again to deactivate. Display indicates "PANEL LOCKED" or "PANEL UNLOCKED" to show status. **Restrictions:** If panel is locked when power is set to OFF, it will remain locked when power is set to ON; however, the display will not indicate locked status.

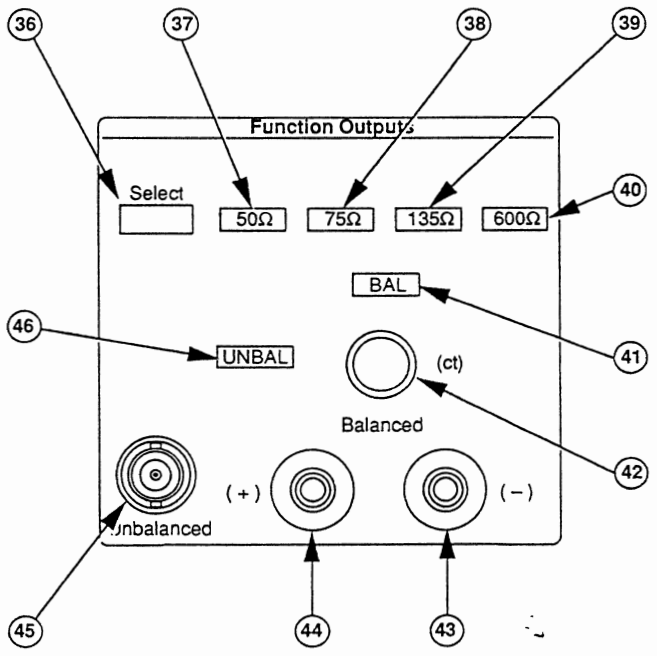

VIEW C

36	Function Outputs Select key	Used to select desired output impedance (50Ω, 75Ω, 135Ω, or 600Ω) and output connector (UNBAL or BAL) combination. Press until desired indicators light. **Restrictions:** See 50Ω, 75Ω, 135Ω, 600Ω, UNBAL, or BAL indicators.
37	50Ω indicator	When ON, indicates 50Ω output impedance. Select to match 50Ω load impedance. Provides an signal output with 50Ω impedance at the Unbalanced output connector. To activate, press Function Outputs Select key until 50Ω and UNBAL indicators light. Defaults to 50Ω UNBAL.
38	75Ω indicator	When ON, indicates 75Ω output impedance. Select to match 75Ω load impedance. Provides a signal output with 75Ω impedance at the Unbalanced output connector. To activate, press Function Outputs Select key until 75Ω and UNBAL indicators light.

Table 3-1. Front Panel Controls, Indicators, and Connectors (Continued)

Key	Control, Indicator or Connector	Function
39	135Ω indicator	When ON, indicates 135Ω output impedance. Select to match 135Ω load impedance. Provides signal output with 135Ω impedance at the Balanced output connector. To activate, press Function Outputs Select key until 135Ω and BAL indicators light. **Restrictions:** Locked out for frequencies greater than 1 MHz. See BAL indicator for further restrictions.
40	600Ω indicator	When ON, indicates 600Ω output impedance. Select to match 600Ω load impedance. Provides signal output with 600Ω impedance at the Unbalanced or Balanced output connectors. To activate, press Function Outputs Select key until 600Ω and BAL, or 600Ω and UNBAL indicators light. **Restrictions:** Locked out for frequencies greater than 1 MHz. See BAL indicator for further restrictions.
41	BAL indicator	When ON, indicates that Balanced output connectors are providing an operator defined balanced output signal. Impedance is selectable for 135Ω or 600Ω. To activate, press Function Outputs Select key until 135Ω and BAL, or 600Ω and BAL indicators light. **Restrictions:** Locked out for frequencies greater than 1 MHz, for Triangle, Square, or DC functions, for Offset other than 0 Vdc, and/or symmetry other than 50%.
42	Balanced (ct) terminal	Captive screw binding post used as neutral center tap with Balanced (–) and Balanced (+) jacks.
43	Balanced (–) jack	Female banana jack with 135Ω or 600Ω output impedance. Provides a balanced output from 2 mHz to 1 MHz when used as negative signal lead with Balanced (+) jacks. Selected when BAL indicator on.
44	Balanced (+) jack	Female banana jack with 135Ω or 600Ω output impedance. Provides a balanced output from 2 mHz to 1 MHz when used as positive signal lead with Balanced (–) jacks. Selected when BAL indicator on.
45	Unbalanced connector	BNC female connector with 50Ω, 75Ω, or 600Ω output impedance. Provides an unbalanced output from 2 mHz to 20 MHz (2 mHz to 1 MHz for 600Ω). Selected when UNBAL indicator on.
46	UNBAL indicator	When on, indicates Unbalanced output connector is providing an operator defined unbalanced output signal. Impedance is selectable from 50Ω, 75Ω, or 600Ω. To activate, press Function Outputs Select key until 50Ω and UNBAL, 75Ω and UNBAL, or 600Ω and UNBAL indicators light. Defaults to 50Ω UNBAL. **Restrictions:**600Ω UNBAL locked out for frequencies greater than 1 MHz.

Table 3-1. Front Panel Controls, Indicators, and Connectors (Continued)

Key	Control, Indicator or Connector	Function

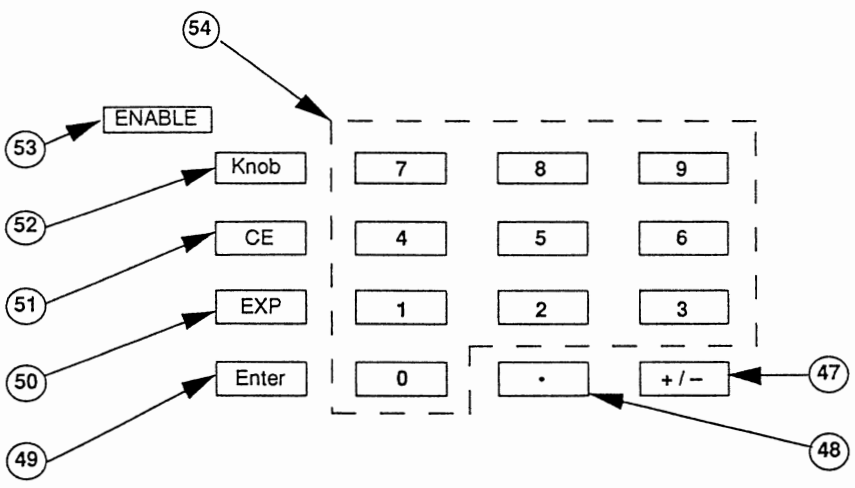

VIEW D

47	+/- key	Used to enter a positive or negative sign for numeric data entry. Used for standard and exponent entry. Blank indicates positive, – indicates negative. Press to change sign.
48	. (DECIMAL) key	Used to enter a decimal point for numeric data entry.
49	Enter key	Used to terminate entries from the Numeric keypad. Pressing after numeric data entry transfers the display contents to MODEL 288 internal circuits. All values entered not within specifications are disregarded. Values exceeding resolution are rounded or entered to nearest allowable value.
50	EXP key	Used to enter an exponent digit. To enter an exponent, use Numeric keypad to enter prefix, press EXP key, then exponent value using Numeric key 0 to 9. Exponent can be entered as a negative by pressing +/– key.
51	CE key	Used to clear a numeric entry error when using the Numeric keys. Unwanted data must be cleared before pressing Enter key. Press once to clear display of numeric entry.
52	Control Knob key	Used to enable or disable the control Knob. When ON, selecting appropriate parameter key activates control Knob (ENABLE indicator ON). When OFF, control Knob is deactivated (ENABLE indicator remains OFF). Press for ON, press again for OFF. Defaults to ON.
53	ENABLE indicator	When ON, indicates that control Knob will change value in the display. Press the Knob key to activate. Restrictions: ENABLE indicator will light only when selecting a parameter that can use the control Knob as input.

Table 3-1. Front Panel Controls, Indicators, and Connectors (Continued)

Key	Control, Indicator or Connector	Function
54	NUMERIC keypad (0 — 9)	Used to enter a 0, 1, 2, 3, 4, 5, 6, 7, 8, or 9 for numeric data entry. Used with +/–, DECIMAL, Enter, EXP, and CE keys to enter data. Press desired digit.

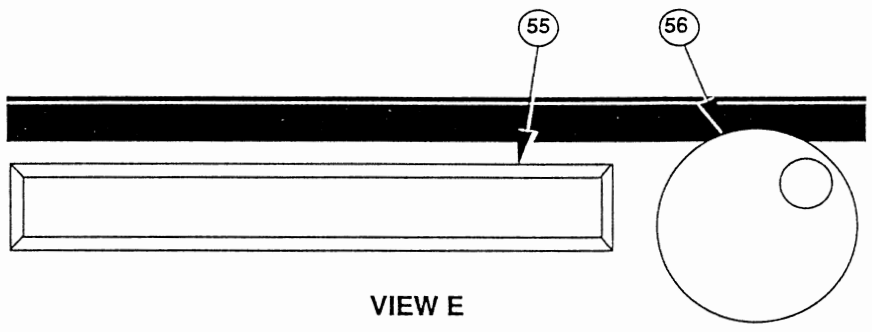

VIEW E

55	DISPLAY	Indicates all output signal information, entry information, operator messages, and error codes. Variable brightness 16-digit alphanumeric display with decimal point and minus sign.
56	Control KNOB	Used to change numeric value of flashing digit as selected by Cursor keys. CW rotation increases value, CCW rotation decreases value. Active when ENABLE indicator is ON.

3.1.2 Rear Panel Controls, Indicators, and Connectors.

This paragraph provides information on the location, description, and use of the rear panel controls, indicators, and connectors. Refer to figure 3-2 for the location of the rear panel controls, indicators, and connectors. Table 3-2 provides the description and use of the rear panel controls, indicators, and connectors.

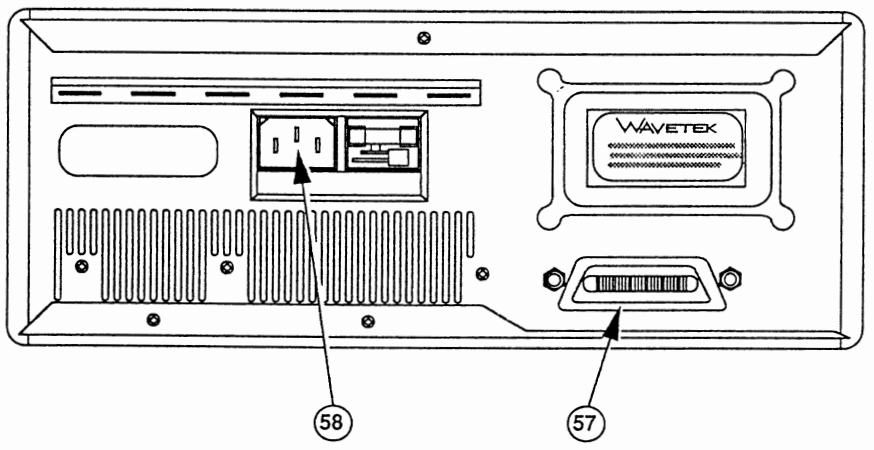

Figure 3-2. Operator's Controls, Indicators, and Connectors (rear view).

Table 3-2. Rear Panel Controls, Indicators, and Connectors

ey	Control, Indicator, or Connector	Function
57	GPIB connector	Used to connect an external Controller to Model 288 during remote operation. Connector has 24 pins and threaded posts conforming to IEEE-488 1978.
58	INPUT POWER connector	Used as ac power input connector for Model 288. Also contains the line fuse and voltage selection facilities. Voltage selection is from 100/120/ 220/240 Vac. Number visible in window indicates nominal line voltage for which the Model 288 is set to operate. Power input connector accepts female end of power cable (supplied). Protective grounding conductor connects the Model 288 through this connector. Line power fuse is 0.75 amp, 250V for 100/120 Vac and 0.375 amp, 250V for 220/240 Vac operation.

3.2 NORMAL OPERATION

This section provides the information required to set up and operate the Model 288 signal generator. Operation of the signal generator is divided into sections: continuous wave, sweep modulation, amplitude modulation, frequency modulation, voltage controlled frequency, and GPIB operation.

Operation of signal generator is provided in paragraphs 3.2.2 thru 3.2.7. Refer to tables 3-1 and 3-2 for use and description of the front and rear panel controls, connectors, and indicators. Table 2-2 lists all operator errors along with the probable cause.

3.2.1 Start Up

Refer to section 2, paragraph 2.3.3, for turn-on procedures

3.2.2 Continuous Wave (CW)

Perform the following steps (using figure 3-3) to provide continuous wave output signal from 2 mHz to 20 MHz at from 1 mVpp to 15 Vpp.

1. Press the Reset key (15). Verify that CW indicator (13) is on.
2. Select desired output waveform (sine, triangle, square, or dc) using the Function Select key (14).
3. Press the following keys and then enter desired value. Use the Cursor keys (6) and control Knob (7), or the Numeric keypad (9) and Enter key (8). Entry will appear in the display (5).
   - Press the Frequency key (1) and enter desired output frequency (Hz) or period (SEC).
   - Press the Amplitude key (2) and enter desired output amplitude in Vpp, Vp, Vrms, or dBm.
   - Press the Symmetry key (3) and enter desired output waveform symmetry in percent.
   - Press the Offset key (4). If Sine, Triangle, or Square is selected (14), enter desired output waveform reference level in volts dc. If dc is selected (14), enter desired dc output level in volts dc.
4. Select desired output impedance (50Ω, 75Ω, 135Ω, or 600Ω) and connector (BAL or UNBAL) using Function Outputs Select key (12) to match load termination.

NOTE

- *When connecting the Model 288 output connector to a load, use a cable with the correct impedance for the output selected.*
- *Balanced ct connector is internally connected to the shield of all the other Model 288 BNC connectors. When connecting to external equipment, whose connector shields are at chassis ground, a ground loop will be formed that will adversely affect the Balanced output signal.*

5. Connect the selected output Balanced (10) or Unbalanced (11) connector to load.

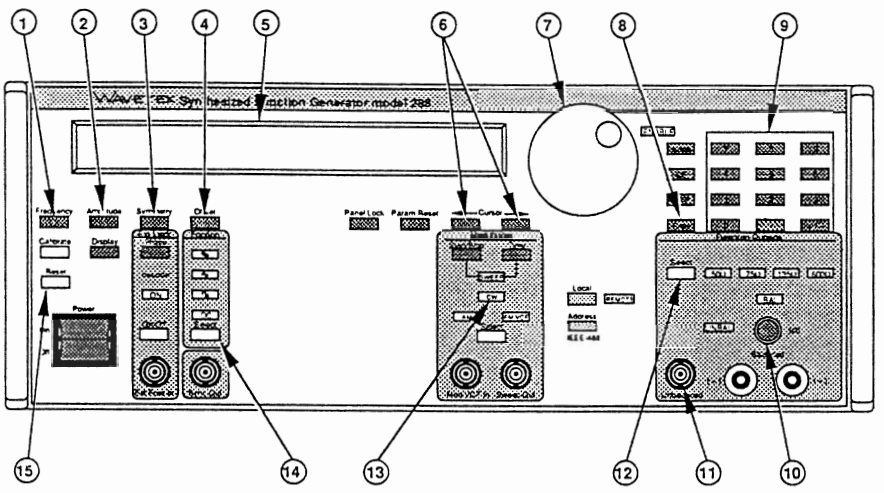

Figure 3-3. Continuous Wave Operation Control Setup

3.2.3 Sweep Modulation

Perform the following steps (using figure 3-4) to provide a swept output signal from 0.002 Hz to 20 MHz at 1 mVpp to 15 Vpp with sweep rate from 0.1 to 100 seconds.

1. Press the Reset key (16). Select Sweep indicator (13) using the Modulation Select key (12).
2. Select the desired output waveform (Sine, Triangle, Square, or DC) using Function Select key (15).
3. Press the following keys and then enter desired value. Use the Cursor keys (4) and control Knob (5), or the Numeric keypad (7) and Enter key (6). Entry will appear in the display (3).
   - Press the Time key (11) and enter the desired sweep time in SEC or Hz.
   - Press Start/Stop key (14) until "START X HZ" is displayed and enter desired sweep start frequency in Hz.
   - Press the Start/Stop key (14) until "STOP X KHZ" is displayed and enter the desired sweep stop frequency in Hz

   NOTE

   If the entered start and/or stop frequency exceeds the Model 288 sweep limits, one parameter will be adjusted. Press the Start/Stop key (14) as required to verify entered frequencies.

   - *Press the Amplitude key (1) and enter desired swept output amplitude in Vpp, Vp, Vrms, or dBm.*
   - *Press the Offset key (2). If Sine, Triangle, or Square selected (15), enter desired swept output waveform reference level in volts dc. If dc selected (15), enter desired dc output level in volts dc.*
4. Select the desired output impedance (50Ω, 75Ω, 135Ω, or 600Ω) and connector (BAL or UNBAL) using Function Outputs Select key (10) to match load termination.

   NOTE

   - *When connecting the Model 288 output connector to the load, use cable with correct impedance for the output selected.*
   - *Balanced ct connector is internally connected to the shield of all the other Model 288 BNC connectors. When connecting to external equipment, whose connector shields are at chassis ground, a ground loop will be formed that will adversely affect the Balanced output signal.*
5. Press Start/Stop key (14) until "SWEEP RUN" is displayed.
6. Connect the selected output Balanced (8) or Unbalanced (9) connector to load.

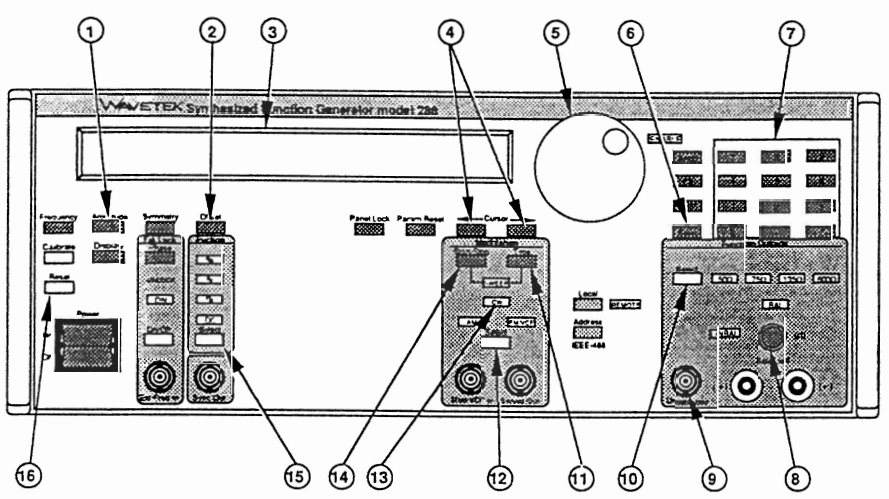

Figure 3-4. Sweep Modulation Operation Control Setup

3.2.4 Amplitude Modulation (AM)

Perform the following steps (using figure 3-5) to provide an amplitude modulated output signal from 0.1 Hz to 20 MHz at 1 mVpp to 7.5 Vpp with modulation rate from DC to 100 kHz and modulation depth from 0 to 100%.

1. Press the Reset key (16). Select AM indicator (15) using the Modulation Select key (13).
2. Press the following keys and then enter desired value. Use the Cursor keys (6) and control Knob (7), or the Numeric keypad (9) and Enter key (8). Entry will appear in the display (5).
   - Press the Frequency key (1) and enter desired output carrier frequency (Hz) or period (SEC).
   - Press the Amplitude key (2) and enter desired output carrier amplitude in Vpp, Vp, Vrms, or dBm.
   - Press the Symmetry key (3) and enter desired output carrier waveform symmetry in percent.
   - Press the Offset key (4) and enter desired output carrier waveform reference level in volts DC.
3. Connect the external signal source sine wave to the MOD/VCF IN connector (14).
4. Set the external signal source to desired frequency from DC to 100 kHz. This is the rate at which the Model 288 will modulate the output signal.
5. Set the external signal source to desired amplitude from 0 to 4 Vpp. This is the depth at which the Model 288 will modulate the output signal. Modulation depth is directly proportional to the input signal amplitude.

   Example: A 4 Vpp input provides 100% depth, 2 Vpp input provides 50% depth, etc.
6. Select the desired output impedance (50Ω, 75Ω, 135Ω, or 600Ω) and connector (BAL or UNBAL) using Function Outputs Select key (12) to match load termination.

   NOTE

   - *When connecting Signal Generator output connector to the load, use cable with correct impedance for the output selected.*
   - *Balanced ct connector is internally connected to the shield of all the other Model 288 BNC connectors. When connecting to external equipment, whose connector shields are at chassis ground, a ground loop will be formed that will adversely affect the Balanced output signal.*
7. Connect selected output Balanced (10) or Unbalanced (11) connector to load.

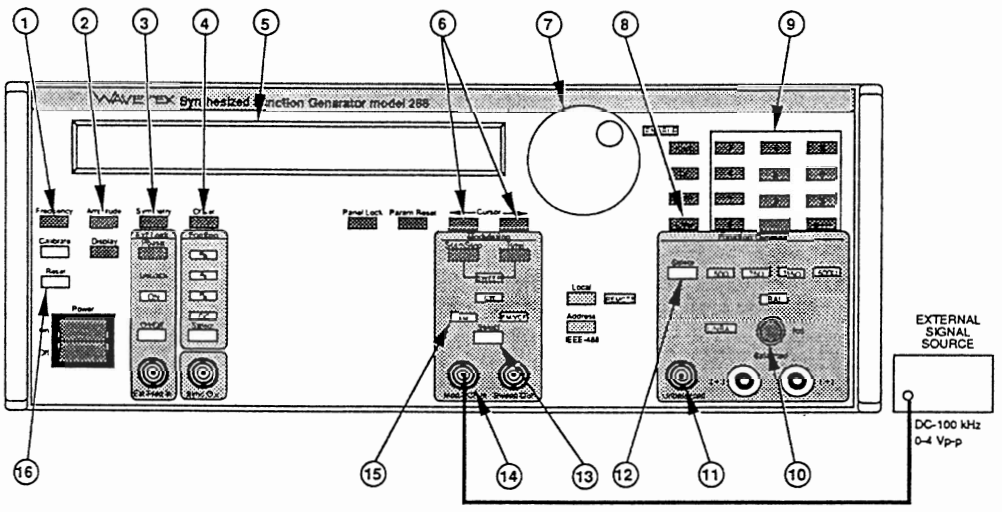

Figure 3-5. Amplitude Modulation Operation Control Setup

3.2.5 Frequency Modulation (FM)

Perform the following steps (using figure 3-6) to provide a frequency modulated output signal from 0.002 Hz to 20 MHz at 1 mVpp to 15 Vpp with modulation rate from DC to 100 kHz and deviation as specified below.

1. Press Reset key (17). Verify CW indicator (15) is on.
2. Calculate and record upper and lower modulation limit frequencies required as follows:

UPPER LIMIT = CTRF + PEAK DEVIATION
LOWER LIMIT = CTRF – PEAK DEVIATION

where: UPPER LIMIT is upper modulation limit required
LOWER LIMIT is lower modulation limit required
CTRF is desired center frequency
PEAK DEVIATION is desired positive OR negative deviation

Example: Desired Center Frequency = 200 kHz
Peak Deviation = ± 25 kHz

Upper Limit = 200 kHz + 25 kHz = 225 kHz
Lower Limit = 200 kHz – 25 kHz =175 kHz

3. Using table 3-3, find and record the range number that contains the calculated upper limit (step 2). Verify calculated lower limit (step 2) is within limits of table for range selected.

Example: Upper limit of 225 kHz is range number 8. Calculated lower limit within range (range 8 lower limit 2.0 kHz and calculated lower limit 175 kHz).

CAUTION

Exceeding lower limit will cause output signal distortion.

4. Calculate and record the external source amplitude (Vpp) as follows:

OUT AMP = P-P DEVIATION ÷ DEVIATION PER V

where: OUT AMP is external source amplitude (Vpp)
P-P DEVIATION is desired positive AND negative deviation
DEVIATION PER V from table above using range number recorded in step 3

Example: P-P Deviation = 50 kHz (+ and – 25 kHz)
Deviation per volt = 200 kHz (from table, range 8)
Output Amplitude = 50 kHz ÷ 200 kHz = 0.25 Vpp

5. Press the Frequency key (1) and enter calculated upper limit frequency (step 2) in Hz. Use either Cursor keys (5) and control Knob (6), or the Numeric keypad (8) and Enter key (7). Entry will appear in the display (4).

8. Select FM/VCF indicator (12) using the Modulation Select key (13).

9. Select the desired output waveform (Sine, Triangle, Square, or DC) using function Select key (16).

10. Press the following keys and then enter desired value. Use either Cursor keys (5) and control Knob (6), or the Numeric keypad (8) and Enter key (7). Entry will appear in the display (4).

    - Press the Frequency key (1) and enter center frequency used in calculation (step 2) in Hz.
    - Press the Amplitude key (2) and enter desired output carrier amplitude in Vpp, Vp, Vrms, or dBm.
    - Press the Offset key (3). If Sine, Triangle, or Square selected (16), enter desired output carrier waveform reference level in volts dc. If dc selected (16), enter desired dc output level in volts DC.

11. Connect the external signal source sine wave to MOD/VCF IN connector (14).

12. Set the external signal source to desired frequency from DC to 100 kHz. This is the rate at which the Model 288 will modulate the output signal.

13. Set the external signal source to calculated amplitude (step 4) from 0 to 10Vpp. This is the deviation at which the Model 288 will modulate the output signal.

14. Select desired output impedance (50Ω, 75Ω, 135Ω, or 600Ω) and connector (BAL,or UNBAL) using Function Outputs Select key (11) to match load termination.

NOTE

- *When connecting Signal Generator output connector to the load, use cable with correct impedance for the output selected.*
- *Balanced ct connector is internally connected to the shield of all the other Model 288 BNC connectors. When connecting to external equipment, whose connector shields are at chassis ground, a ground loop will be formed that will adversely affect the Balanced output signal.*

15. Connect selected output Balanced (9) or Unbalanced (10) connector to load.

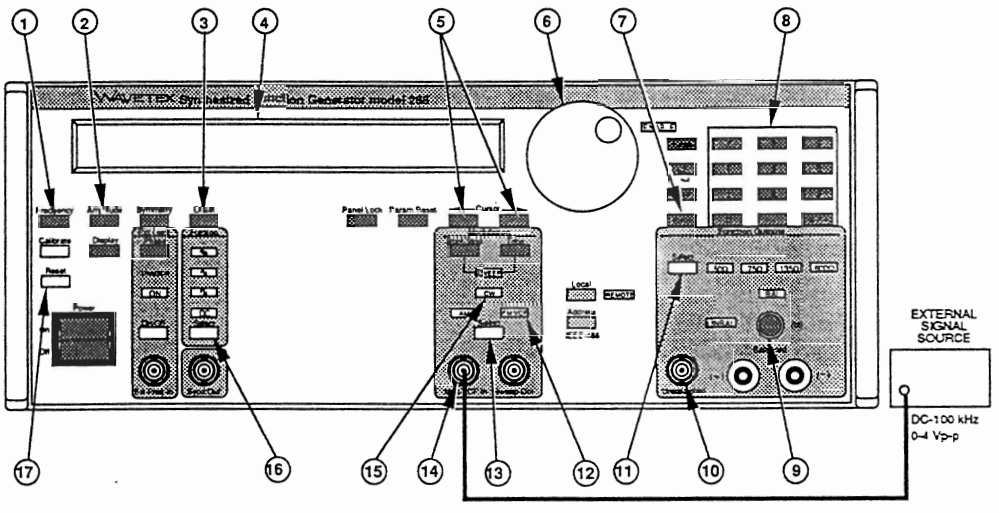

Figure 3-6. Frequency Modulation Operation Control Setup

Table 3-3. Frequency Modulation Range Information.

Range Number	Modulation Upper Limit Range	Modulation Lower Limit	Deviation per Volt
0	20 mHz to 2 mHz	2 mHz	2 mHz
1	200 mHz to 20.1 mHz	2 mHz	20 mHz
2	2 Hz to 201 mHz	2 mHz	200 mHz
3	20 Hz to 2.01 Hz	20 mHz	2 Hz
4	200 Hz to 20.1 Hz	200 mHz	20 Hz
5	2 kHz to 201 Hz	2 Hz	200 Hz
6	20 kHz to 2.01 kHz	20 Hz	2 kHz
7	200 kHz to 20.1 kHz	200 Hz	20 kHz
8	2.0 MHz to 201 kHz	2.0 kHz	200 kHz
9	20 MHz to 2.01 MHz	20 kHz	2 MHz

3.2.6 Voltage Controlled Frequency (VCF)

Perform the following steps (using figure 3-7) to provide a voltage controlled frequency output signal from 0.002 Hz to 20 MHz at 1 mVpp to 15 Vpp.

1. Press Reset key (17). Verify CW indicator (15) is on.
2. Calculate and record upper and lower frequency limits required as follows:

UPPER LIMIT = INT + FREQ CHG
LOWER LIMIT = INT – FREQ CHG

where: UPPER LIMIT is upper frequency limit required
LOWER LIMIT is lower frequency limit required
INT is desired initial frequency
FREQ CHG is desired positive or negative frequency change

Example: Desired Initial Frequency = 200kHz, Frequency Change = (+25kHz) and (–10 kHz)

Upper Limit = 200 kHz + 25 kHz = 225 kHz
Lower Limit = 200 kHz – 10 kHz =190 kHz

3. Using table 3-4, find and record the range number that contains the calculated upper limit (step 2). Verify calculated lower limit (step 2) is within limits of table for range selected.

Example: Upper limit of 225 kHz is range number 8. Calculated lower limit within range (range 8 lower limit 2.0 kHz and calculated lower limit 190 kHz).

NOTE

Exceeding lower limit will cause output signal distortion.

4. Calculate and record the external DC source level (Vdc) as follows:

OUT VOLT = FREQ CHG ÷ CHG PER V

where: OUT VOLT is external source voltage (+ or – Vdc)
FREQ CHG is desired positive or negative frequency change
CHG PER V from table above using range number recorded in step 3.

Example: Frequency Change = + 25 kHz and – 10 kHz
Change per volt = 200 kHz (from table, range 8)

Output Voltage = + 25 kHz ÷ 200 kHz = + 0.125V
and
Output Voltage = – 10 kHz ÷ 200 kHz = – 0.05V.

5. Press the Frequency key (1) and enter calculated upper limit frequency (step 2) in Hz. Use either Cursor keys (5) and control Knob (6), or the Numeric keypad (8) and Enter key (7). Entry will appear in the display (4).
6. Select FM/VCF indicator (12) using Modulation Select key (13).
7. Select desired output waveform (Sine, Triangle, Square, or DC) using function Select key (16).

Press the following keys and then enter desired value. Use the Cursor keys (5) and control Knob (6), or the Numeric keypad (8) and Enter key (7). Entry will appear in the display (4).

- Press Frequency key (1) and enter initial frequency used in calculation (step 2) in Hz.
- Press Amplitude key (2) and enter desired output amplitude in Vpp, Vp, Vrms, or dBm.
- Press Offset key (3). If Sine, Triangle, or Square selected (16), enter desired output waveform reference level in volts dc. If dc selected (16), enter desired dc output level in volts DC.

Connect the external DC source DC level to MOD/VCF IN connector (14).

). Set the dc signal source to the calculated level (step 4) from –5 to +5V.

1. Select desired output impedance (50Ω, 75Ω, 135Ω, or 600Ω) and connector (BAL/UNBAL) using Function Outputs Select key (11) to match load termination.

NOTE

- *When connecting the Model 288 output connector to the load, use cable with correct impedance for the output selected.*

- *Balanced ct connector is internally connected to the shield of all the other Model 288 BNC connectors. When connecting to external equipment, whose connector shields are at chassis ground, a ground loop will be formed that will adversely affect the Balanced output signal.*

12. Connect selected output Balanced (9) or Unbalanced (10) connector to load.

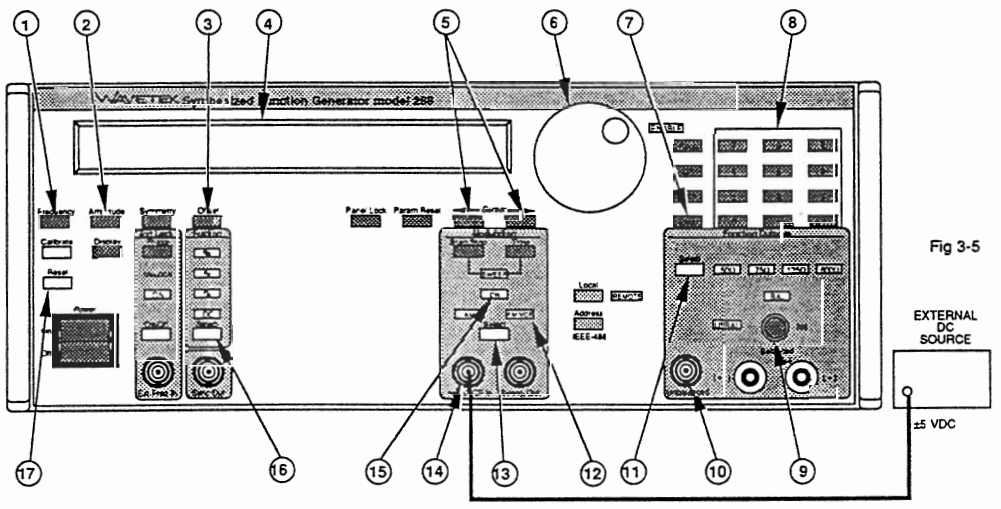

Fig 3-5

Figure 3-7. VCF Operation Control Setup

Table 3-4. Voltage Controlled Frequency Range Information.

Range Number	Upper Limit Range	Lower Limit	Change per Volt
0	20 mHz to 2 mHz	2 mHz	2 mHz
1	200 mHz to 20.1 mHz	2 mHz	20 mHz
2	2 Hz to 201 mHz	2 mHz	200 mHz
3	20 Hz to 2.01 Hz	20 mHz	2 Hz
4	200 Hz to 20.1 Hz	200 mHz	20 Hz
5	2 kHz to 201 Hz	2 Hz	200 Hz
6	20 kHz to 2.01 kHz	20 Hz	2 kHz
7	200 kHz to 20.1 kHz	200 Hz	20 kHz
8	2.0 MHz to 201 kHz	2.0 kHz	200 kHz
9	20 MHz to 2.01 MHz	20 kHz	2 MHz

3.2.7 GPIB (Remote) Operation

This following paragraphs describe the Model 288 remote operation (GPIB) procedures using an external controller. GPIB Digital Interface conforms to IEEE 488 1978 subsets SH1, AH1, T6, TE0, L4, LE0, SR1, RL1, PP0, DC1, DT1, CO, and E1.

Remote operation of the Model 288 is very similar to local operation, except that the commands are entered and received using an external Controller, and not by pressing keys and observing the display and indicators on the front panel. The GPIB connector permits remote control of all functions except Power switch, Local key, and Address key. Refer as necessary to Section 2 for descriptions of controls, indicators, and connectors, and individual operating procedures (paragraphs 3.2.2 thru 3.2.7). GPIB connector wiring data is shown in figure 3-8.

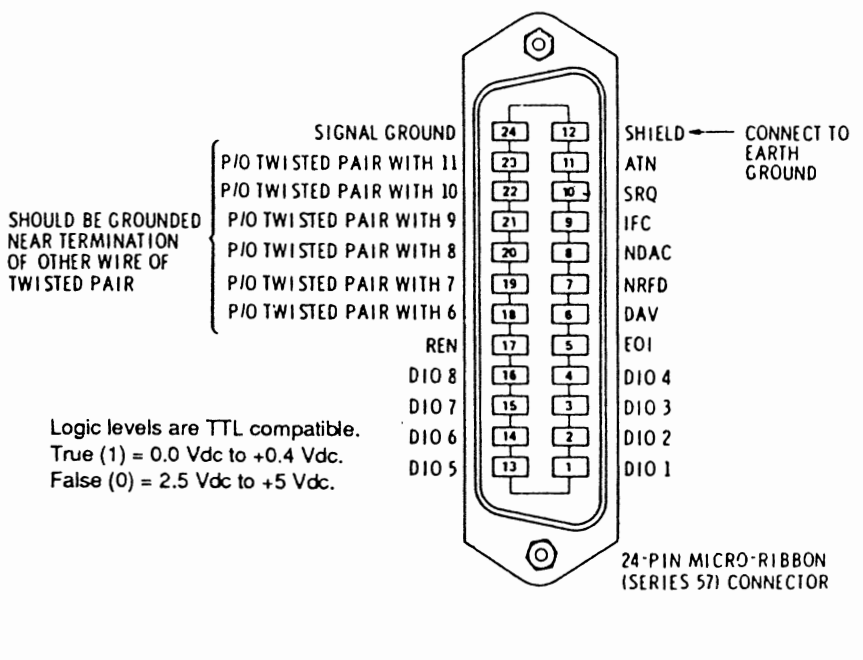

Figure 3-8. GPIB Wiring Connector Pin Out

erform the following steps (using figure 3-9) for remote eration of the Model 288 signal generator.

Connect the equipment as shown below.

NOTE

Keep GPIB interconnect cable length below 2 meters (6.6 feet)

Perform Model 288 turn-on procedure (refer to paragraph 2.2.3).

On Signal Generator front panel:

- Press the Local key (8), verify that the display (1) indicates "GOTO LOCAL", and that the REMOTE indicator (6) is out.
- Press the Address key (7) and enter desired address from 00 to 30. Use the control Knob (3), or the Numeric keypad (5) and Enter key (4). Entry will appear in the display (1). Default address is 09.

Operator commands are programmed using an external Controller and GPIB commands listed in table 3-6

3.3 GPIB COMMAND STRUCTURE

3.3.1 Introduction

This paragraph tells how to control the Model 288 remotely over the GPIB bus and is divided into the following topics:

Model 288 Commands.

Universal and Addressed Commands.

Detailed Command Descriptions.

Service Requests.

Displaying Messages.

GPIB Keys.

3.3.2 Model 288 Commands

The following is a discussion of the Model 288 commands and the rules that must be followed to apply them.

Commands Types

Command Syntax

Command List

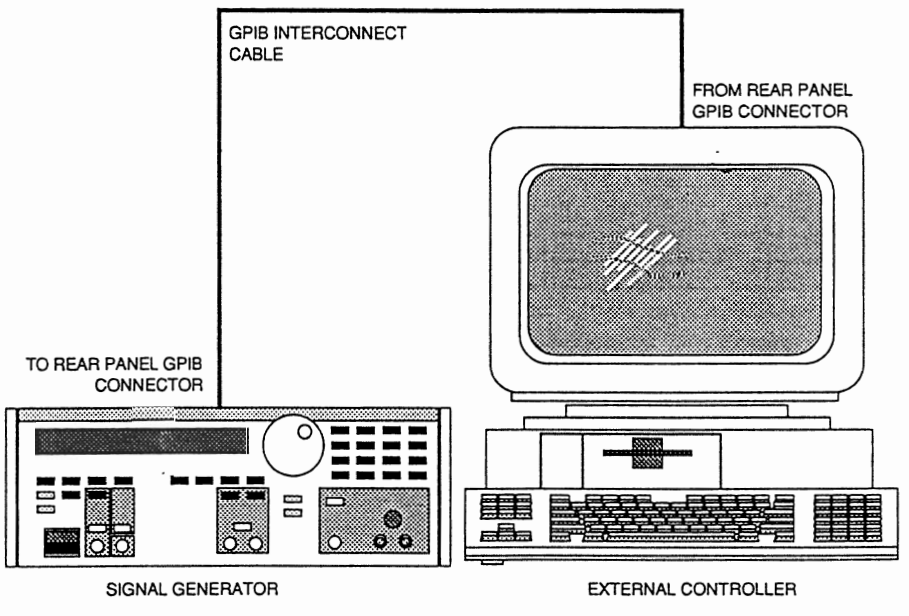

Figure 3-9. GPIB Interconnect Wiring

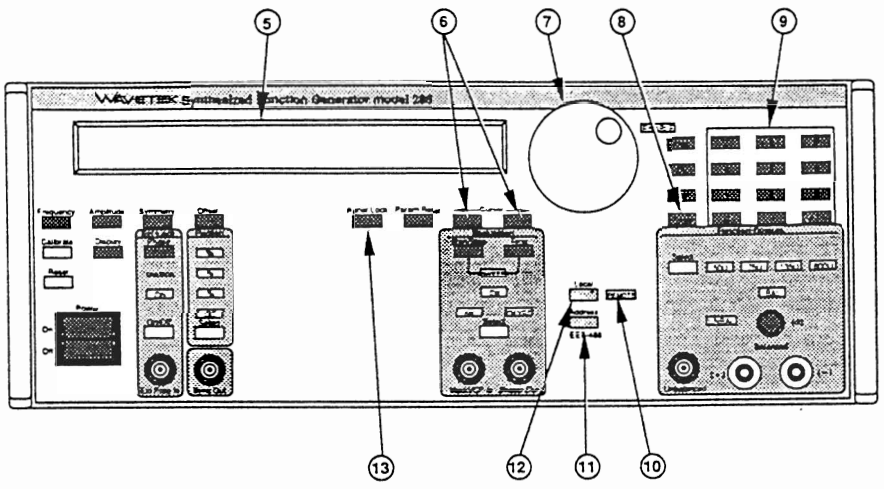

Figure 3-10. GPIB Operation Control Setup

3.3.2.1 Command Types

The Model 288 has four types of commands: parameter, enumerated, direct, and query.

The following text discusses each type of command separately. The examples terminate the commands with semicolons (;) or closing quotes ("). The controller may send just the command name without a value and the 288 will display that parameter's current value. Replacing the numerical value with a "?" (query) will make the Model 288 display and send the current value to the controller as a string of characters. Do not send an Execute command after a query command, the string will not be sent because the Execute command has put the Model 288 in a "listen for more commands" mode. See "terminators" for more information.

Parameter Commands

Parameter commands specify a particular numerical value within a continuous range of values. The values should use exponential (E) notation.

Format: <header>SPACE<value>TERMINATION

The header specifies the parameter and the value specifies the numerical value. Table 3-6 lists the parameter commands and their allowable value ranges.

Example:

FREQUENCY 2E3;	Sets the frequency at 2kHz
PHASE 87;	Sets the phase at 87°
SWEEPTIME 2.3;	Sets the second sweep time at 2.3

Enumerated Commands

Enumerated commands provide a list of distinct choices. Either the name or numerical value can be used (AM may be sent by sending either "MA;E" or "M1;E").

Format: <header>SPACE<argument>TERMINATION

The header specifies the parameter and the argument specifies the choice. A number or a descriptive character string can be used for the argument. Table 3-6 lists the enumerated commands and their arguments.

Example:

FUNC 2 or FUNC SQUARE	Selects the square output function.

Direct Commands

Direct commands make the Model 288 perform an immediate action.

Format: <header>TERMINATION

The header specifies the action. Direct commands have no value or argument. Table 3-6 lists all the direct commands.

Examples:

RESET:	Resets 288 parameters
TRIGGER:	Triggers waveform or sweep
EXECUTE:	Executes preceding commands in string.

?uery Commands

uery commands tell the Model 288 to send information the controller.

ne Model 288 will not send the information when it eceives the command, but will wait until the controller ubsequently addresses it as a talker. Query com-.ands can be sent only one at a time. If two or more are ent in a query string, the Model 288 will respond only o the last one.

ormat: <header> <?>TERMINATION

he header specifies the type of information. Because 'l parameter command headers (and most enumer-ed command headers) can also serve as query head-rs, the question mark tells the Model 288 to send (rather an receive) the information. Certain other headers ppear only in query commands. See Query Com-nands in paragraph 3.3.2.2, 288 Command Syntax for sample query program.

Parameter Header Examples:

FREQUENCY?"	Returns current frequency.
PHASE?"	Returns current phase.

Enumerated Header Examples:

FUNCTION?"	Returns current output wave form.
OUTPUT?"	Returns current output setting.

Query Header Examples:

MAINPARAMETERS?"	Returns current output waveform.
SRQ?"	Returns current output set ting.
STATUSBYTE?"	Returns status byte.

3.2.2 288 Command Syntax

ommands sent by an instrument controller to the odel 288 must follow the syntax given in table 3-5. The llowing text discusses command operation, command rocessing, semicolons, minimum uniqueness, and ? ommands.

Command String Operation

he command string at the top of the table (written to run n a Wavetek Model 6000 Instrumentation Controller) orks as follows:

WRITE @ 709:"FR 2E4;OU 1;FU SQ;FR;E"

FR 2E4 Sets the frequency to 20 kHz.

OU 1 Selects unbal 75Ω as the output configuration of channel 1.

FU SQ Selects a square waveform.

FR Tells the Model 288 to display the frequency menu.

E Makes the Model 288 convert all these commands to a signal output.

How Does the 288 Process Commands?

The 256-character listen buffer receives the commands from the instrument controller. If it fills up before receiving an Execute command, it will stop accepting commands, distribute its contents to the next-setup registers, then again accept commands. The commands in the next-setup registers will not take effect until the Model 288 receives an Execute.

The listen buffer accepts all commands regardless of syntax errors. When the Model 288 processes the commands in the listen buffer, it copies the defective commands over into the SRQ buffer and labels them with PE:0 to indicate defective syntax. The parameters and functions that the defective commands would have changed retain their previous values. If a command appears in the SRQ buffer, the Model 288 ignores it.

Terminators

A terminator tells the Model 288 that it has reached the end of the current command. Although the Model 288 recognizes both semicolons (;) and spaces as terminators, semicolons greatly simplify debugging. When the controller sends the Model 288 more than one command in a string, the individual commands should have semicolons (;) inserted between them as terminators. When using spaces, the Model 288 will copy (and ignore) all commands after the first defective command into the SRQ buffer. With semicolons, the Model 288 will accept all good commands and put only the defective ones in the SRQ buffer. Consider these two examples with and without semicolons (the defective command FR2E4 should read FR 2E4):

With Semicolons

Write @ 709:"FR2E4;OU 1;FN SQ;FR;E"

Message: SRQ = /PE:0 FR2E4*/

Without Semicolons

Write @ 709:"FR2E4 OU 1 FN SQ FR;E"

Message: SRQ = /PE:0 FR2E4* CH 1 OT 1 FN RM FR E/

Minimum Uniqueness

The Model 288 will interpret the following three command lines exactly the same. String 1 uses the minimum character set each command requires, string 2 uses longer abbreviations that contain each command's minimum character set, while string 3 completely spells out each command./ The expansion of the function command (FN 3, FUNC DC, and FUNCTION DC) demonstrates the use of numbers and descriptive character strings in the argument of enumerated commands.

Write @ 709:

"FR 2E4;OU 1;FN 3;FR;E" (**1**)

Write @ 709:

"FREQ 2E4;OUTP 1;FUNC SQR;FREQ ;EXEC" (**2**)

Write @ 709:

"FREQUENCY 2E4;OUTPUT 1;FUNCTION SQUARE ;FREQUENCY;EXECUTE" (**3**)

Query Commands

Query commands (such as FR?) make the Model 288 return the current setting of the parameter as a string of characters and require a program to make the controller use the returned data. The following Wavetek 6000 program requests the data, accepts it, and writes it to the 6000's screen.

Program Statements	Explanation
10 CLEAR	Clear screen
20 WRITE @ 709:"FR?"	Write command to Model 288 (port 7, address 09)
30 DIM STRING$*25	Dimension string to 25 characters
40 READ @709:STRING$	Read returning string
50 PRINT STRING$	Print string to screen
60 END	End program

3.3.2.3 288 Command List

Table 3-6 uses the following format to list and briefly describe the complete Model 288 GPIB command set. See the detailed command descriptions part or the corresponding menu key description for more information about each command.

Command	Range/String	Function
FRequency	2E-3 to 20E6	Sets the genera-tor frequency.
FRequency?	FREQUENCY n	Returns generator frequency n.
FUnction	0 to 3	Selects a channel output waveform.

Command Column

1) Lists commands alphabetically by their full names
2) Indicates minimum uniqueness with capitol letters
3) Indents command arguments

Range/String Column

1) Gives the value range for each parameter command.
2) Gives the argument number range for each enumerated command.
3) Lists the arguments (names and numbers) for each enumerated command.
4) Gives the string returned in response to each query command.

Function Column

1) States briefly the function of each command.
2) Uses an asterisk (*) to indicate further explanation in the detailed command description section.

Minimum Uniqueness

Capitol letters (AutoCalibrate) indicate the minimum letter combination required by the Model 288. Use just the caps (AC), a longer abbreviation that contains all the caps (AUTOCAL), or the entire command (AUTOCALIBRATE).

Other Sources of this Data

The HELP? command provides less complete forms of the data given in table 3-6. HELP? sends a list of all the commands, arguments, and ranges to the GPIB controller.

Table 3-5. Model 288 Command Syntax

Typical Command Line: WRITE @709:"FR 2E4;OU 1;FN SQ;FR;E"

Syntax	Explanation
RITE @709	Varies depending on the controller. This format, for the Wavetek 6000, tells the controller to send the command string out port 7 (the GPIB port) to the Model 288 (at address 09 on the GPIB bus).
"__" or '__'	Enclose the command string in quotes. Either single or double quotes can serve as string delimiters.
;	Separate commands with semicolons. See "terminators" in the text for the reasons for this requirement.
E	Use exponent notation to avoid entering long strings of zeros. For example, enter 20000 as 2E4 and 0.0005 as 5E-4.
FR	Use the minimum uniqueness version (FR), a longer version that contains the
FREQUENCY	minimum uniqueness letters (FREQ), or the full version (FREQUENCY) of each FREQUENCY command in programming. Table 3-6 spells out the commands and indicates the minimum uniqueness with capital letter (FRequency). The text gives examples of full, partial, and minimum uniqueness command strings.
FU 2	
FU SQ	Enumerated commands that select a function (such as FU, select channel output FU SQ waveform) allow the function to be selected by either number (3) or by name (SQ), (square waveform). Table 3-6 lists the enumerated commands and their arguments.
;CMD;	Drop the numerical value of a parameter command to make the Model 288 display that parameter. For example, ;A; will display the amplitude. Use this feature in step-by-step operation to follow and verify program operation.
E"	Place an Execute command at the end of a command string to make the Model 288 put the commands into effect. The Model 288 will accept commands and put them in the pending setup registers, but it will not generate their output until an E command is sent. E also puts the Model 288 in the "listen for more commands" mode; therefore, do not put E after a query (?) command as it will prevent the Model 288 from returning the answer.
?	Replace the numerical value of a parameter command with a ? to make the Model 288 return the current setting of that parameter as a string of characters. Table 3-6 lists the query commands and shows the format of the returning strings. Query commands also make the Model Model 288 display the menu of the requested parameter. The text gives a short program that makes the controller accept and display the returning information. Do not use E after a ? command.

Table 3-6. Model 288 Command Set

Command	Abbreviation	Range/Value Min	Range/Value Max	Description
Amplitude	A	1E-3	15	Set Amplitude
Amplitude?	A?			Request current Amplitude setting
AutoCalibrate	AC			Start Auto-Calibrate
Execute	E			Execute previous commands
FRequency	FR	2E-3	20E6	Set Frequency
FRequency?	FR?			Request current Frequency setting
FUnction	FU	0	3	Set Function
DC	D	3		Set dc Function
SIne	SI	0		Set Sine Function
SQuare	SQ	2		Set Square Function
Triangle	T	1		Set Triangle Function
FUnction?	FU?			Request current Function setting
Help?	H?			Request this Command list
Modulation mode	M	0	5	Set Modulation mode
Am	A	1		Set to AM modulation mode
Cw	C	0		Set to CW modulation mode
Fm	F	2		Set to FM/VCF Modulation mode
Sweep	S	5		Set to Sweep Modulation mode
SweepStArt	SSA	3		Set to Sweep start
SweepStOp	SSO	4		Set to Sweep stop
Modulation mode?	M?			Request current Modulation type
MaiNParameters?	MNP?			Request current main parameters
OFfset	OF	-5	5	Set Offset voltage
OFfset?	OF?			Request current Offset value
OUtputtype	OU	0	4	Set Output type
Balanced 135	B1	4		Set Output to 135Ω Balanced
Balanced 600	B6	3		Set Output to 600Ω Balanced
Unbalanced 50	U5	0		Set Output to 50Ω Unbalanced
Unbalanced 75	U7	1		Set Output to 75Ω Unbalanced
Unbalanced 600	U6	2		Set Output to 600Ω Unbalanced
OUtputtype?	OU?			Request current Output type
PhaseLock	PL	0	1	Set Phase lock source
External	E	1		Set Phase lock source to external
Internal	I	0		Set Phase lock source to internal
PhaseLock?	PL?			Request current Phase lock source
Phase	P	-180	180	Set phase against external source
Phase?	P?			Request current phase value
PANellock	PAN	0	1	Set Panel lock
ON	ON	1		Set Panel to locked
OFf	OFF	0		Set Panel to unlocked
PARameterreset	PAR			Reset previously transmitted parameter
RAngelock	RA	0	1	Set Range lock
ON	ON	1		Locks generator in the current range
OFf	OFF	0		Sets Range to normal
Reset	R			Reset parameters except GPIB address
SYmmetry	SY	5	95	Set Symmetry value
SYmmetry?	SY?			Request current Symmetry value
SWeepStArtfreq	SWSA	2E-3	20E6	Set Sweep start frequency
SWeepStArtfreq?	SWSA?			Request current Sweep start frequency

Table 3-6. Model 288 Command Set (Continued)

Command	Abbreviation	Range/Value Min	Range/Value Max	Description
SWeepStOpfreq	SWSO	2E-3	20E6	Set Sweep stop frequency
SWeepStOpfreq?	SWSO?			Request current Sweep stop frequency
SWeepTime	SWT	100E-3	100	Set Sweep time
SWeepTime?	SWT?			Request current Sweep time value
SRQMask	SRQM	0	255	Set Service Request Mask value
SRQMask?	SRQM?			Request current SRQ Mask value
SRQ?	SRQ?			Request current SRQ value
STatusByte?	STB?			Request current Status Byte value
SErialnumbers?	SE?			Request instrument serial numbers
STARTCALibration	STARTCAL			Initiate instrument Auto-Cal
Talkmode	T	0	10	Set instrument to send a value
Version?	V?			Request software version number

3.3.3 Universal and Addressed Commands

Universal and addressed (U/A) commands make most GPIB instruments perform generally accepted standard functions. Usually, universal commands control all the instruments on the GPIB bus, while addressed commands control individual instruments at specific addresses on the bus. The Model 288 accepts the following U/A commands:

Command	Type	Function
DCL	Universal	Device Clear
GET	Addressed	Group execute trigger
GTL	Addressed	Go to local
LLO	Universal	Local lock out command
SDC	Addressed	Selected device clear

Paragraph 3.3.4 (detailed command descriptions) discusses these U/A commands and selected Model 288 commands in detail.

U/A Syntax

This manual uses generic names to identify the universal and addressed commands and the functions they perform. Individual controllers will use differently named commands to perform these same functions. See the manual for the controller being used to determine the actual command names and the syntax they require.

3.3.4 Detailed Command Descriptions

The following paragraphs describe in detail the unique Model 288 GPIB commands that perform functions not controlled by the front panel and also the GPIB universal and addressed commands recognized by the Model 288. Use the following list to identify these specialized commands.

Command	Type	Description
DCL	Universal	Device Clear
GET	Address	Group Execute Trigger
GTL	Address	Go To Local
HELP?	288	HELP?
LLO	Universal	Local Lock Out
MNP	288	MaiN Parameters
SDC	Address	Selected Device Clear
SRQ?	288	Service ReQuest?
SRQM	288	Service ReQuest Mask
SRQM?	288	Service ReQuest Mask?
STB?	288	STatus Byte?
V?	288	Version?

GPIB Control

The Model 288 limits the operator's use of the front panel with two levels of increasing restrictions as shown in table 3-7.

The Model 288 switches to GPIB control when the instrument controller asserts the GPIB REN (remote enable) line and sends to the Model 288 its listen address. The Wavetek 6000 instrument controller command string WRITE @709:"– command string –" will automatically perform these two actions. The GPIB control restricts further front panel operation as described in table 3-7. The Model 288 will remain under the GPIB control until the operator presses the Local key.

Table 3-7. Front Panel Restrictions

IF Front Panel Operation is Limited With —» THEN the Operator Can:	Nothing	GPIB Control	LLO Command
See the Screen Display?	Yes	Yes	Yes
Display Parameters?	Yes	Yes	Yes
Take Control Back From the GPIB?	Yes	Yes	No
Change Parameters?	Yes	No	No

LLO Command

All instruments on the bus recognize the universal command LLO; it cannot be directed to just one instrument. LLO restricts operation of the Model 288 front panel as described in table 3-7 For the Wavetek 6000 controller, LLO has the format LLO @7, where 7 specifies the GPIB bus port of the controller.

GTL Command

GTL cancels the LLO command and returns the Model 288 front panel to full operator control. All instruments on the bus recognize the addressed command GTL; however, it must be sent to each instrument individually. The Wavetek 6000 instrument controller uses the LCL command to issue GTL commands. LCL @7 sends GTL commands to all the instruments on the bus, while LCL @709 sends the GTL to just the specified instrument. In these command formats, 7 specifies the GPIB bus port of the controller and 09 specifies the address of a particular instrument on the bus. LCL becomes effective on receipt; the Model 288 does not require that it be followed with another command.

GET Command

The GET command triggers whatever trigger function that is set up within the Model 288. All instruments on the bus recognize the GPIB addressed command GET (group execute trigger); however, it can be sent to just one instrument at a time. For the Wavetek 6000 controller, the TRG command sends the group execute trigger to individual instruments on the GPIB bus. TRG has the format TRG @709, where 7 specifies the GPIB bus port of the controller and 09 the address of a particular instrument on the bus. The Model 288 triggers the selected function immediately on receipt of the TRG command.

HELP? Command

The HELP? command makes the Model 288 return a list of the Model 288's primary and secondary commands and their limits as a string to the controller. HELP? requires that a program be written to make the instrument controller accept and print the returned list. The following Wavetek 6000 program requests the list, accepts it, and sends it to a printer connected to the GPIB bus. To make this program work, set the address switches of the printer to 04. Table 3-6 provides the same information as the list this program prints.

Wavetek 6000 HELP Print Program

```
100  DIM A$*255                  Dimension String to 255
     characters.
110  WRITE @709:"HELP?"          Write HELP to port 7,
     address 09.
120  READ @709:A$                Read the String
130  IF A$="0" THEN 170          If string is "0" jump to
     170
132  PRINTER IS @704             Printer is at port 7, a d -
     dress 04.
140  PRINT A$                    Print the list
150  GO TO 120
170  END                         End Program
```

MaiNParameters? Command

The MNP? command makes the Model 288 return the current setting of the Model 288's main parameters as a string to the controller. The controller can save this string, then send it back to the Model 288 at a later time to restore the parameters to their previous values.

DCL and SDC Commands

The DCL and SDC commands reset the Model 288 to the power-up conditions, but leave it in the remote (GPIB controlled) mode. All instruments on the bus recognize the GPIB universal command DCL (device clear). Individual instruments recognize the GPIB addressed command SDC (selected device clear). For the Wavetek

000 instrumentation controller, the DCL command is-
ues DCL and SDC. To reset everything on the bus, use
CL @&, where 7 specifies the GPIB bus port of the
ontroller. To reset just one instrument, use DCL @709,
here 09 specifies the instrument address. The Model
88 resets itself immediately when it receives either com-
and.

eset Command

ne Reset command resets the Model 288 to default
onditions.

ersion? Command

ne Version? command makes the Model 288 return the
oftware version of the Model 288 EPROM as a string of
haracters. Version? requires a program to make the
strument controller use the returned string. The follow-
g Wavetek 6000 program requests the version, ac-
epts it, and writes it to the 6000's screen.

Wavetek 6000 Version? Print Program

0	CLEAR	Clear screen
0	WRITE @709:"V?"	Write VERSION? to port 7, address 09.
0	DIM VERSION$*50	Dimension string to 50 characters.
0	READ @709:VERSION$	Read returning string
0	PRINT VERSION$	Print string to screen
0	END	End program

unning the above program will produce the following
isplay:

WVTK 288 (VX.XX)

this display, x gives the version number.

.3.5 Service Requests

e following paragraphs discuss the concepts of serv-
e requests, describes the commands associated with
em, and then lists the service request messages that
e Model 288 generates. The Model 288 can set the
RQ line whenever a programming error occurs, a hard-
are error occurs, an event is completed, Phase lock
anges state, or a Calibration message is displayed.

RQ CONCEPTS

hat Does the Service Request Tell the Controller?

ne Model 288 service request tells the controller that the
odel 288 wants attention. The Model 288 makes the
quest by asserting the SRQ line of the GPIB bus.
ecause any instrument on the bus can assert this line,
the controller must read the status byte of each instru-
ment in turn to determine which one requested attention.

What Does the Status Byte Tell the Controller?

The Model 288 uses six of the eight bits in its status byte. One tells the controller if the Model 288 requested service. The others indicate the type or types of messages (programming error, hardware error, event, Phase Lock state, or Calibration) that the Model 288 wants to send. Figure 3-11 shows the format of the Model 288 status byte. If the controller wants to know the specific message within the category, it must read the Model 288's SRQ buffer.

What Does the SRQ Buffer Tell the Controller?

The Model 288 SRQ buffer stores the programming error, hardware error, event complete, Phase Lock state, and Calibration messages until the controller can read them. Tables 3-8 thru 3-12 list all of the SRQ messages.

SRQ COMMANDS

The following paragraphs discuss the commands related to the service request mask, the status byte and the service request messages.

SRQMask Command

The SRQM command makes the Model 288 selectively ignore one or more of the three types of conditions that make it produce service requests. For example, if programming errors were masked out, the Model 288 would not load messages for specific programming errors into the SRQ buffers and it would not set the PE and service request bits in the status byte. Figure 3-9 shows the positions and the corresponding decimal mask values required to block out PE, HE, and EV messages. The SRQ mask is reset to SRQmask #1 (programming error only) on power on. It is not changed by "RESET"

SRQMask? Command

The SRQM? command makes the Model 288 return the current mask setting to the controller. The Model 288 sends the SRQ mask setting as the character string SRQMASK#, where # gives the decimal equivalent of the binary mask bits. To use SRQMASK?, write a program that first asks the Model 288 to send the mask, then tells the controller how to receive and process the returning string.

STatusByte? Command

The STB? command makes the Model 288 send its current status byte to the controller over the GPIB bus. The Model 288 sends its status byte as a string of characters with the format STB=##, where ## gives the decimal equivalent of the status byte. STatusByte? reads, **but**

does not reset, the status byte of the Model 288. To use STatusByte?, write a program that first asks the Model 288 to send the status byte, then tells the controller how to receive and process the returning string.

SRQ? Command

The SRQ? command makes the Model 288 send the contents of the SRQ buffer to the controller over the GPIB bus. The Model 288 sends its SRQ buffer contents as a string of characters with the format SRQ = MESSAGES, where MESSAGES represents a string of messages. Reading the SRQ buffer empties it. To use SRQ?, write a program that first asks the Model 288 to send the SRQ buffer messages, then tells the controller how to receive and process them.

SRQ MESSAGES

SRQ Message Format

The Model 288 puts messages in the SRQ buffer in this general format:

SRQ=/PE:n Description//HE:n Description//
EV:n Description/

Slashes (/) enclose each message. PE identifies a programming error message, HE a hardware error message, and EV an event complete message. "n" identifies a specific message within the type. This fixed format header allows a computer to easily parse (decode) the message. "Description" describes the error in English for the benefit of human readers. Table 3-8. lists all the SRQ programming error messages, table 3-9 lists all the SRQ hardware error messages, table 3-10 lists all the SRQ event error messages, table 3-11 lists all the SRQ phase lock state change error messages, and table 3-12 lists all the SRQ Calibration error messages.

3.3.6 Displaying Messages

The Model 288 can accept messages from the GPIB bus and display them on the front panel display. Use this feature to give instructions to an operator or to display information.

Command Format

Send messages in this format:

WRITE @709:" 'TEXT' "

The standard double quotes (") identify the command string. The single quotes (') identify the contents as a message rather than commands. Messages do not require an Execute command.

Although the Model 288 accepts either single or double quotes as string delimiters, the Wavetek 6000 interprets the double quotes as its own program string delimiters. This restricts use to the single quotes for Model 288 display strings when using the Model 6000. Other controllers might reverse this situation.

Message Size

The screen will allow a maximum message size of four line of 16 characters. The Model 288 will ignore any characters beyond these limits.

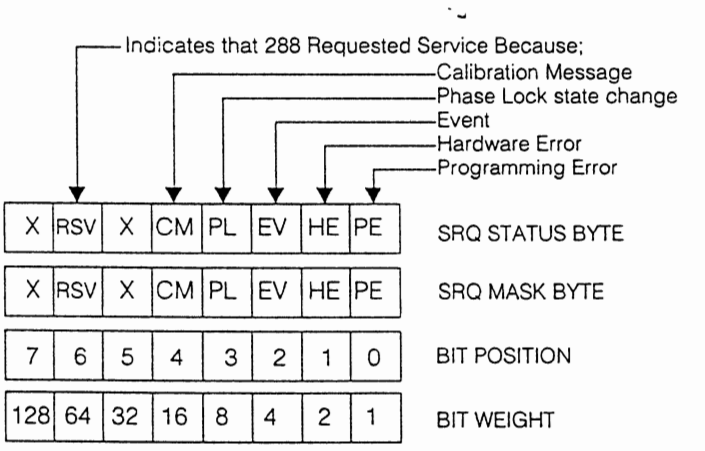

Figure 3-11 Model 288 Status Byte and SRQ Mask

·asing

ess any menu key or send another GPIB command ing to return to normal Model 288 displays. To erase .e previous message, send a new message.

.3.7 GPIB Keys

ddress Key

he address key enables entry of an alternate GPIB ddress using the front panel controls. The GPIB bus ddress identifies the Model 288 to the instrument con-oller. Press the address key to display the current GPIB ddress on the display. Key in a new address using the umeric keypad or the control knob and then press Exe-ute.

Local Key

The Local key switches control of the Model 288 from the GPIB bus to the front panel. Receipt of any GPIB command (if the controller simultaneously asserts the REN line of the GPIB) by the Model 288 disables the front panel to the extent that parameter settings can be read but modes or numbers cannot be changed. Pressing the Local key returns full control to the front panel except when the universal command LLO has been issued by the controller. LLO disables the Local key so that full control cannot be obtained at the front panel.

Table 3-8. SRQ Programming Error Messages

Command	Description
/PE:0 < defective command string > /	The Model 288 did not recognize the command it received. < defective command string > is whatever garbage the Model 288 received over the bus.
/PE:1 < parameter header > /	This is a limit error. An attempt was made to set a parameter to an illegal value. < parameter header > is the maximum header string e.g. "FREQUENCY" or "SWEEPSTOPFREQ".
/PE:2:< param# >:< param# > < param name >-< param name> CONFLICT/	This is a setting conflict error. This service request will occur after an execute command if there are conflicting settings. It will only flag the first conflict that it finds. < param# > and < param name > are redundant and are as follows: **< param# > — < param name >** 1 — FREQUENCY 2 — AMPLITUDE 3 — OFFSET 4 — SYMMETRY 5 — PHASE 6 — FUNCTION 7 — MODULATION 8 — EXTLOCK 9 — OUTPUT 10 — SWP START 11 — SWP STOP 12 — SWP TIME 13 — AMPLITUDE-OFFSET 14 — RANGE LOCK

Table 3-9. SRQ Hardware Error Messages

Command	Description
/HE:0 < cal index >< cal name >	This is a failure to complete and autocal step. AUTOCAL ERROR < cal index > is a number associated with the calibration parameter that failed adjustment. < cal name > is is an archaic name associated with the calibration parameter that failed adjustment..
/HE:1 WAIT < time > MIN/	This means an autocal was attempted before the required 20 minute warm-up. < time > is the time (in minutes) remaining before an autocal can be performed.

Table 3-10. SRQ Event Complete Error Messages

Command	Description
/EV:0 AUTOCALIBRATION COMPLETE/	This means that autocalibration was completed.
/EV:1 EXECUTE COMPLETE	This means that execute was complete. After an execute command, the Model 288 will send either this service request or a PE:2 (assuming both PE and EV SRQ's are enabled by the SRQ mask).

Table 3-11. SRQ Phase Lock State Change Error Messages

Command	Description
/PL:0 PLL UNLOCKED/	This means that the phase lock loop has changed from an unlocked state to a locked state..
/PL:0 PLL LOCKED/	This means that the phase lock loop has changed from a locked state to an unlocked state..

Table 3-12. SRQ Calibration Error Messages

Command	Description
/CM:1:<cal index><cal name>/	This is an information message usually requesting a manual operation. < cal index > is a number associated with the calibration parameter or step that needs attention. < cal name > is anarchic name associated with the calibration parameter or step that needs attention.
/CM:2:< cal index >:< number >	This is an information message having an unchangable number < cal name > / associated with it.
/CM:3:< cal index >:< number>	This is a request for a numeric calibration parameter. < cal name > / < number > is the previous value of this parameter.
/CM:4 CALIBRATION BUTTON	This is sent if an attempt is made to enter the calibration NOT PUSHED/ procedure without the internal calibration enable key pushed.
/CM:5 THANKS I NEEDED THAT! /	This is sent after the completion of the full calibration procedure if the calibration was required because of lost RAM data.

SECTION 4
CIRCUIT DESCRIPTION

4.1 THE MODEL 288

The Model 288, a 20 MHz synthesized function generator, operates with synthesizer accuracy (<0.02%) over the 20 Hz to 20 MHz range, CW or AM only. Between 2mHz to 20 Hz and in FM or sweep, the unit operates as a standard function generator with <3% accuracy. A separate generator sweeps the generator's frequency up to three decades between a start frequency and a stop frequency (up or down). The Model 288 to an external source and allows the Model 288's output phase (relative to the external source) to be varied ±180°.

The Model 288 consists of six separate assemblies as shown in figure the Instrument Schematic (0004-00-0510): motherboard, front panel, function generator, phase lock loop, output, and rear panel. The motherboard links all the assemblies within the Model 288. Plus it receives, input data from the front panel, processes that data into commands and control lines, and distributes the commands and control lines to the other assemblies. The motherboard also route data from the assemblies back to the front panel. The front panel contains the operator interface: keypad for parameter selection and value entry; control knob for value entry; the display for output signal information, operator messages, and error codes; and LEDs for front panel annunciation. The function generator produces the generator's two basic waveforms: square and sine. In addition, the function generator controls the units frequency and symmetry control. The phase lock assembly locks the function generator to an internal reference for frequency synthesis or locks the function generator to an external source for variable phase operation. Also, the phase lock assembly contains the convertor for triangle to sine conversion and the X-Y multiplier for amplitude modulation. The output assembly selects, amplifies, and attenuates the waveform. The rear panel assembly contains the units power input connector, power transformer, and fuse.

Signal Flow

Signal flow through the Model 288's assemblies depends upon the function and mode selected. The signal originates on the function generator assembly (see figure 4-1) which produces the basic waveforms: tri-

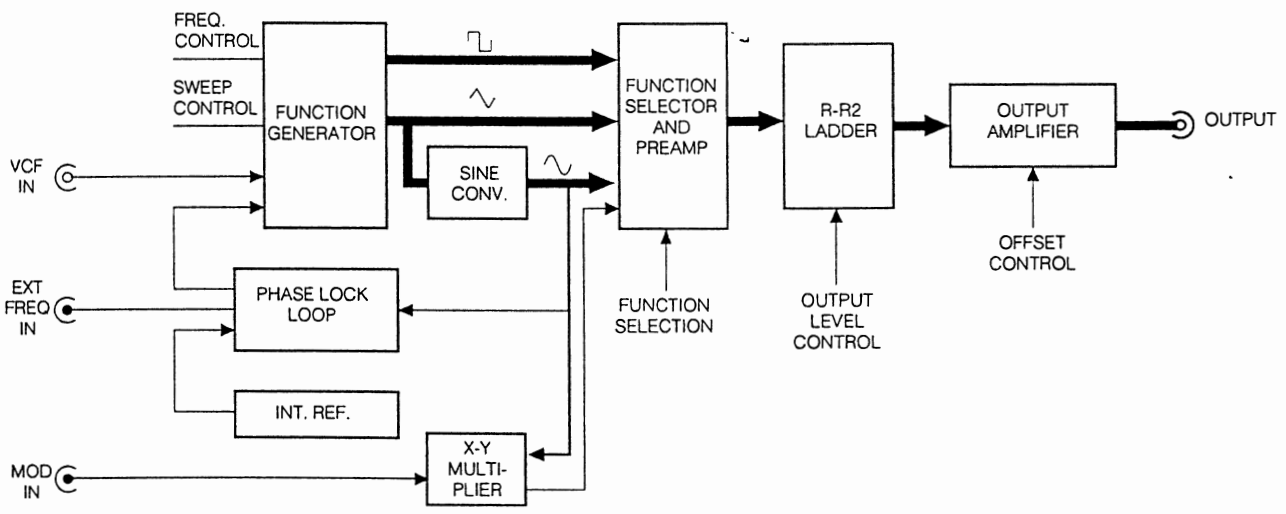

Figure 4-1. Model 388 Signal Flow

ngle and square. The motherboard routes both wave-
orms to the function selector on the output assembly.
he triangle also runs to the sine convertor located on
ne phase lock assembly. The motherboard routes the
ine wave to the function selector. The output signal
om the function selector flows through the output
ircuits to the output connectors. The sine wave also a
rives the X-Y multiplier whose output is routed to the
unction selector just like the triangle, square and sine
aves.

n the synthesized mode, the phase lock loop, refer-
nced to an internal frequency standard, controls the
tabilizes the frequency of the function generator. The
ame phase lock loop, using an external reference
equency, locks the Model 288 to an external source.

ontrol

All control inputs originate from either the front panel
eypad or a GPIB controller. The microprocessor circuit
on the motherboard processes this input data and
roduces the control lines for the Model 288's circuits.
Each plug-in board (function generator, phase lock
oop, and output) contains input registers that decode
he control data.

4.2 DETAILED CIRCUIT DESCRIPTION

4.2.1 Motherboard Assembly

he mother board (see schematic 0103-00-3000) pro-
ides overall control, interconnection and signal rout-
ng, dc voltages, internal reference frequency signals,
and remote operation in the Model 288. The mother
oard sends and receives all data and control signals to
and from the assemblies. All input and output connec-
ors located on the rear panel, except the input power
connector, connect through the mother board. Connec-
ors for the plug-in assemblies are staggered to prevent
accidental insertion into incorrect positions.

The mother board contains:

- Microprocessor Circuit
- GPIB Interface Circuit
- Frequency Synthesizer Circuit.
- Internal Calibration Network Circuit
- DAC/Sample and Hold Network Circuit
- Secondary Input/Output Network Circuit
- Relay Driver Network Circuit.
- Balanced Output Attenuator Network and Impedance Control Circuit
- Unbalanced Output Attenuator Network and Impedance Control Circuit
- Power Supplies Circuit

4.2.1.1 Microprocessor Circuit

The microprocessor circuit (schematic 0103-00-3000 sheet 3) receives input data from the front panel keyboard and control knob, or GPIB interface, processes the data, and provides data and control lines for internal operation. The microprocessor circuit consist of a microprocessor, a processor support controller, and memory (RAM and ROM). There are no test points or adjustments in this circuit.

The microprocessor (Motorola MC6803) controls the microprocessor circuit and provides 16-bit data memory location addresses. The microprocessor performs computations as defined by the operating system instructions in memory (ROM) and provides the 8-bit output for the memory (RAM) and GPIB interface Circuit. The processor support controller U7 converts the microprocessor data and the instrument feedback data into control signals, quiet address (QA) buses, and quiet data (QD) buses.

The Memory is both RAM and ROM. RAM (8K), a nonvolatile memory, stores the calibration values generated at each calibration, and any other values required for current operation. A RAM backup battery (BT1) prevents the loss of data when power is turned off. ROM (16K), programmed at the factory, contains the operating system instructions. Maintenance Calibration switch (SW1) used in conjunction with the front panel keyboard allows performance of several maintenance functions. A flashing Life Light verifies microprocessor sequencing.

4.2.1.2 GPIB Interface Circuit

The GPIB interface circuit (schematic 0103-00-3000 sheet 10) allows remote operation of the Model 288 using an external IEEE-488 compatible controller. All functions except power and GPIB address are programmable using the interface. The GPIB circuit consist of a GPIB controller and two transceivers. This circuit contain no test points or adjustments.

The GPIB controller (Motorola MC68488) functions as a traffic controller, permitting data to flow in either direction when the correct control information is received. The 'handshaking' routine will ensure neither the signal generator nor the remote controller will send data faster than the other can use. The controller has internal registers where control, data, and address words are loaded and stored until needed or requested. The controller bus connects to the microprocessor circuit address bus A0-A2. The identification address of an instrument is determined by five bits in the controller address register. The default address (09) automati-

cally loads into the controller from RAM at turn-on. A new address must be entered using the front panel keypad.

The transceivers permit bidirectional flow. They have sufficient input sensitivity to minimize false signals and sufficient drive current to minimize signal loss.

4.2.1.3 Frequency Synthesizer Circuit

The frequency synthesizer (schematic 0103-00-3000 sheet 4) supplies the internal reference frequency for the signal generator. The frequency generated corresponds to the front panel frequency setting. However, it does not operate below 20 Hz. This circuit has two test points located under the shield. TP5 is the loop control voltage. TP17 is the synthesizer output (SYNTH). There are no adjustments in this circuit.

The frequency synthesizer circuit consists of a phase lock loop, voltage controlled oscillator, divide by two circuit, and a counter/divider. The output from a 10 MHz crystal controlled reference is multiplied and divided by three numbers computed by the microprocessor circuit. The three numbers are a serial data stream of 64 bits: 14 bits divide the reference, 14 bits divide the variable, and 36 bits divide the VCO to the desired frequency. All are under software control and respond to the front panel frequency settings.

4.2.1.4 Internal Calibration Network Circuit

During the measurement portion of the auto calibration cycle, the internal calibration network (schematic 0103-00-3000 sheet 2) measures five analog voltages. FGTST and FGTST100 voltages monitor the function generator condition. THD, +PK, and –PK voltages monitor the output assembly status. VLOOP monitors the phase lock loop assembly status. The microprocessor circuit monitors the digital equivalent of these voltage, and if any are incorrect, they are corrected by applying an analog calibration voltage from the DAC/sample and hold network circuit.

A sixth voltage, the RAM backup battery (DVMBAT), is tested during the power on sequence. If the voltage tests low, the microprocessor circuit causes the display to show "LOW BATT". If the battery tests dead, the Microprocessor circuit causes the display to show "CAL REQUIRED". There are no test points or adjustments in this circuit (TP1 is not used).

4.2.1.5 DAC/Sample and Hold Network Circuit

The DAC/sample and hold network circuit (schematic 0103-00-3000 sheet 5) supplies the control voltages for the signal generator. The DAC/Sample and Hold Network Circuit consists of a digital to analog converter and a demultiplexer. TP7 connects to the sample and hold digital/analog output. There are no adjustments in this circuit.

The digital to analog circuit (DAC) converts the binary data from the microprocessor circuit into one of eight control levels in the form of a stepped waveform.

The Demultiplexer converts the stepped waveform containing the eight control levels from the DAC into eight separate analog control voltages. Four control voltages, VOFSET, VPHASE, VSLEN, and VFREQ respond to the front panel settings. The other four control voltages VSINCAL, VAMCAL, VCGZERO, and VTRIBAL respond to calibration data from the microprocessor circuit.

During the measurement portion of the auto calibration cycle, SHCLK clocks the serial data (SHDATA) into the (DAC). From this data, the eight analog calibration voltages (–5V and +5V) are produced which slightly changes the normal outputs of the eight circuits during the calibration portion of the auto calibration cycle which changes the circuit output to correct the signal output to the internal frequency and voltage standards. The DAC sample and hold network circuit and the internal calibration network circuit work together to alternately measure and adjust a circuit. The serial data is stored in RAM until the next auto calibration cycle. If the analog calibration voltage cannot change the measured voltage enough to bring it into limits, the microprocessor circuit will generate an error message to be displayed. This error refers to the affected circuit.

4.2.1.6 Secondary Input/Output Network Circuit

The secondary input/output network (schematic 0103-00-3000 sheet 6) conditions and routes the Ext Freq In signal to phase lock loop's reference frequency input. This circuit squares the input signal and compensates the signal for any nonsymmetry . It also routes the Sync Out square wave from the function generator assembly through this circuit's 50Ω driver to the front panel connector. This circuit also routes the Mod/VCF In signal directly to the phase lock loop assembly and function generator assembly. While The Sweep Out is routed to the front panel from the function generator assembly.

To test the external frequency input circuit, an external signal must be connected to the Ext Freq In connector. All test points and components are located under the shield. TP9 is the limited external frequency input. TP10 is the buffered external frequency. There are no adjustments in this circuit.

.2.1.7 Relay Driver Network Circuit.

ıe relay driver network circuit (schematic 0103-00-
)0 sheet 7) controls the relays used in the balanced
.d unbalanced output attenuator network and imped-
ıce control circuits. Microprocessor data lines drive
's circuit. There are no test points or adjustments in this
rcuit.

.2.1.8 Balanced Output Attenuator Net-'ork and Impedance Control Circuit

ıis circuit (schematic 0103-00-3000 sheet 7) routes
ıtput signals to BAL output connectors. The relays in
ıis circuit are driven by the relay driver network circuit.
utput signals (BOUT1 and BOUT2) from the output
ssembly are selected and routed through a –40 dB
tenuator as required by the amplitude setting at the
ont panel. The desired impedance of 135Ω or 600Ω is
elected, and the signal is routed to the front panel BAL
onnectors. There are no test points or adjustments in
ıis circuit.

.2.1.9 Unbalanced Output Attenuator 'etwork and Impedance Control Circuit

ıis circuit (schematic 0103-00-3000 sheet 7) routes
ıtput signals to UNBAL output connector The relays in
ıis circuit are driven by the relay driver network circuit.
utput signal (UBOUT) from the output assembly are
elected and routed through a –40 dB attenuator as
equired by the amplitude setting at the front panel. The
esired impedance of 50Ω, 75Ω or 600Ω is selected,
nd the signal is routed to the front panel UNBAL
onnector. There are no test points or adjustments in
ıis circuit.

.2.1.10 Power Supplies Circuit

hese circuits provides the ac and dc operating volt-
s for all circuits in the signal generator. The power
plies circuit consist of a +5V power supply, ±12V
er supply, ±22V power supply, and VFD ac filament
ply.

5V Power Supply. This circuit (schematic 0103-00-
)00 sheet 8)supplies the +5 Vdc for the TTL logic and
lay circuits in the signal generator. Remove the jumper
MP6 to isolate the +5V supply from the circuits .

12V Power Supplies. This circuit (schematic 0103-00-
)00 sheet 8) supplies the positive and negative 12 Vdc
r the signal generator. These power supplies are
ghly regulated by a precision voltage reference source,
REF, which is also used by the internal calibration
etwork. Remove the jumper JMP4 to isolate the +12V
upply, and remove the jumper JMP5 to isolate the –12V
upply.

±22V Power Supplies. This circuit (schematic 0103-00-3000 sheet 9) supplies the positive and negative 22V used in the signal generator. The +12V supply provides a reference voltage for the positive 22V supply. This power supply cannot be isolated.

VFD AC Filament Supply. An unregulated ac voltage (schematic 0103-00-3000 sheet 9) approximately 8 Vrms supplies current to the display characters in the Vacuum Fluorescent Display .

These power supplies have five test points:

JMP4 is the +12 Vdc output.
JMP5 is the –12 Vdc Output.
JMP6 is the +5 Vdc output.
TP14 is the +22 Vdc output.
TP15 is the –22 Vdc output.
There are no adjustments in these circuits.

4.2.2 Front Panel

The front panel provides operator interface to the signal generator. It allows the operator to input commands, and provides the operator with a display showing output signal parameters and equipment status. This assembly contains the following circuits:

Control Knob Circuit.
Display
Keyboard Circuit
Light Emitting Diode Circuit.

4.2.2.1 Control Knob

The control knob (SW1 - schematic 0103-00-3001 sheet 1) rotates continuously in both directions. Knob values depend on the function, mode, and range selected. Two output lines, RKA and RKB, are pulsed at TTL logic levels as the knob is rotated. The microprocessor circuit on the motherboard counts the pulses to determine the amount of change. The microprocessor circuit detects the knob's direction by comparing the TTL logic level of the signals and detecting the first one to change to a new level. For clockwise rotation, RKA will change first, and for counterclockwise rotation, RKB will change first. The microprocessor circuit determines when the rotation has reached the end of the range selected, in either direction. If there is a further range in the direction the knob is turning, the range will automatically change. If the range is at the limit, the limit value will be displayed.

4.2.2.2 Display

The front panel display (schematic 0103-00-3001 sheet 1) receives its data via the quiet data bus QD5-7. The display controller/driver (U1) receives a serial word of

eight bits on the DISPDATA line. DSPCLK clocks each bit, most significant bit (MSB) first. The serial word may be either a display character or a control word, the MSB determines which. The 64 possible combinations of the remaining seven bits display standard ASCII upper case characters or control various functions and addresses. This display information drives the florescent display. The display controller/driver will retain only the most recent data received.

The display circuit is supplied by its own +15 Vdc regulator (VR1) which uses the +22V for its input. The florescent display filament receives its power from the 9Vac supply. Both voltages originate from the power supply on the motherboard.

4.2.2.3 Keyboard Circuit

The keyboard circuit (schematic 0103-00-3001 sheet 2) consists of 48 push buttons in a eight–column, six–row matrix. The control signal FPREG latches the quiet data bus QD0-2 lines into the decoder. The decoder selects one of the six rows and applies +5 Vdc. If any key is pressed on that row, the +5V will appear on one of the keyboard bus lines P10-P17. The microprocessor circuit on the motherboard determines which key has been pushed by analyzing the position of the decoder when detecting +5V on a column (keyboard bus lines P10-P17).

4.2.2.4 LED Circuit

The LED circuit (schematic 0103-00-3001 sheets 2 and 3) consists of 18 LED's that indicate the mode and function selected. The control signal FPS permits quiet address bus QA0 and QA1 to select one of the four least significant outputs of the decoder. Control signals CLOCK0 and CLOCK 1 of the decoder sequentially strobes an 8-bit number from quiet data bus (QD0-7) into both latches. Each bit (QD0-7) entered into the latches will turn on the LED indicator related to that bit. Control signal FPREG illuminates the UNLK LED and ON/OFF LED in the same way. Once the LED is set, it remains on until a change occurs. Pressing a key associated with a LED will latch new data. The previous LED will turn off and the new one will turn on.

The Power On/Off switch connects the line voltage to the transformer located in the rear panel. The CT (center tap) connector provides a neutral connection for the balanced output connectors.

4.2.3 Function Generator

The function generator produces the Model 288's square and triangle waveforms. The triangle drives the sine converter on the the phase lock loop assembly. The unit routes the triangle and square waves to the output assembly for selection and amplification. The function generator's input registers decodes digital control signals from the microprocessor circuit for use in selecting and maintaining frequency, symmetry, sweep, and modulation. The VCF In (frequency modulation) allows an external signal to control the frequency of the function generator. The function generator also provides the Sync Out and Sweep Out signals. The function generator includes the following circuits:

Voltage Controlled Generator (VCG) Summing Amplifier
Sweep Generator
Symmetry Control
VCG Current Sources
High Frequency Compensation Comparator
Frequency Range Switches
Capacitance Multiplier
Triangle Buffer
Auto Calibration

4.2.3.1 VCG Summing Amplifier

The voltage controlled generator, VCG, (schematic 0103-00-3004 sheet 2) produces a voltage that is the negative sum of its input control voltages. The input control voltages can consist of up to five analog signals:

Fixed frequency set point (VFREQ) originating from the motherboard's DAC/sample and hold network.

Calibration voltage (VCGZERO) generated by the DAC/ sample and hold network on the motherboard.

Feedback control (VLOOP) supplied by the phase lock loop filter on the phase lock loop assembly.

Sweep voltage (SWEEP) generated by the sweep generator (if selected).

Modulating signal (MOD IN) originating at the VCF In connector and routed from the secondary input/ output network on the motherboard (if selected).

These control voltages summed by the amplifier provide an accurate dc voltage (VSUM), test point TP2, for symmetry control and auto calibration circuit. There are no adjustments in this circuit.

4.2.3.2 Sweep Generator

The sweep generator (schematic 0103-00-3004 sheet 2) produces the sweep voltage (0 to -8V) for the function generator. In addition, the sweep generator supplies

the sweep output ramp to the Sweep Out connector. The operator, via the front panel, sets the sweep start and stop frequency, as well as, the sweep time. The microprocessor circuit interpret and routes the data to the sweep generator The microprocessor circuit determines the correct data (byte) to set the sweep generator DAC to produce a voltage that sets the function generator to the start frequency. Then the microprocessor steps DAC, in turn the function generator, to the stop frequency at a rate dependent on the sweep time. At the stop frequency, the microprocessor resets the sweep generator to the start frequency. Another portion of the sweep generator's DAC produces a ramp proportional to the sweep frequency. A calibration voltage (VSLEN) from the DAC/sample and hold circuit provides a correction voltage to the sweep DAC. The voltage (VSLEN) is generated when the internal calibration circuit, during the auto cal cycle reads the sweep output and makes corrections to the sweep generator. The microprocessor circuit stores the correction value as VSLEN which provides the reference voltage for the sweep generator DAC.

4.2.3.3 Symmetry Control

The symmetry control (schematic 0103-00-3004 sheet 3) provides control of the generated waveform's symmetry. VCG summing amplifiers divide the signal VSUM into two signals. One signal controls the one half of the waveform; the other signal controls the other half or the waveform. If the symmetry setting remains at 50% (symmetrical waveform), each signal receives the same amplification. As the symmetry setting changes from 50%, in either direction, one signal receives greater amplification and the other receives less amplification. Control lines QD0-7 from the microprocessor circuit control the outputs from the DAC which in turn set the gain of the VCG amplifiers. The two symmetry control outputs (+FCV and –FCV) drive the VCG current source and high frequency compensation circuit. The auto cal circuit also receives inputs from these two lines. This circuit has two test points: TP3 monitors the positive function control voltage (+FCV) and TP4 monitors the negative function control voltage (–FCV). There are no adjustments in this circuit.

4.2.3.4 VCG Current Sources

The VCG current sources (schematic 0103-00-3004 sheet 4) converts the +FCV and –FCV voltages from the symmetry control into two currents (ISWITCH+ and ISWITCH–) for use by the comparator circuit. The positive current (ISWITCH+) flows into the comparator, and the negative current (ISWITCH–) flows from the comparator. At 50% the current flow is equal flow to and from the comparator. However, if the symmetry setting is not 50%, the current flow will be unsymmetrical.

This circuit has four test points. TP5 is the VCG current sources positive reference voltage. TP8 is the VCG current sources negative reference voltage. TP6 is the positive integrator voltage source current flow into the comparator circuit. TP7 is the negative integrator voltage source current flow out of the comparator circuit. There are no adjustments in this circuit.

4.2.3.5 High Frequency Compensation

The high frequency compensation circuit (schematic 0103-00-3004 sheet 4) offsets any internal circuit time delays in the function generator circuit on the 200 kHz to 2MHz and 2MHz to 20 MHz frequency ranges. At higher frequencies, the time it takes to control or calculate the shape of the waveform, as well as the rise and fall times, and levels takes a measurable part of the time required by the waveform. A calculated value (+COMP and –COMP) compensates for the time delay by slightly altering the +FCV and –FCV signals from the symmetry control circuit at the comparator. The +COMP and –COMP output signal drives auto calibration circuit. There are no test points or adjustments in this circuit.

4.2.3.6 Comparator

The comparator circuit (schematic 0103-00-3004 sheet 7) combines the input signal representing the frequency set point (+COMP and –COMP), and compares it with the actual triangle waveform being generated by the current flows (+VI and –VI). As the output triangle reaches the positive peak set point, the comparator switches the output signal (SQWAVE) to a negative level. When the triangle reaches the negative peak, SQWAVE switches to a positive value. SQWAVE is used as the source square output waveform, and SYNC OUT signal. The switching SQWAVE signal alternately permits the current from the VCG Current Sources Circuit to flow into then out of the Comparator Circuit current sense point (TRINODE). This carefully controlled alternating current flow is sensed in the Triangle Buffer Circuit as a triangle wave (TRIOUT). During the control part of the auto calibration cycle, VTRIBAL is adjusted to the necessary voltage to insure a symmetrical triangle signal is measured by the measurement part of the auto calibration cycle. This circuit has two test points. TP13 is reference square wave, or the level the triangle must reach in order to switch. TP14 is the switched square wave. TP15 is the Square Wave output. There are no adjustments in this circuit.

4.2.3.7 Frequency Range Switches

The frequency range switches (schematic 0103-00-3004 sheet 5) selects the four switchable range capacitors for the Model 288's five upper ranges. The microprocessor circuit via the function generator's data latches selects the capacitors. On the 20 MHz range, the capacitance consists of approximately 50 pF (15 pF plus stray capacitance) permanently connected to the input of the triangle buffer (TRINODE). For the 2MHz range the microprocessor circuit adds 440 pF in parallel with the existing 50 pF (≈500 pF total). For the 200 kHz range, the microprocessor circuit adds to 0.0047 μF in parallel with 440 pF (≈0.005 μF total). For the 20 kHz range, the microprocessor adds 0.047 μF in parallel with 0.0047 μF (≈0.05 μF total). For the 2kHz range, the microprocessor adds 0.47 μF in parallel with 0.047 μF (≈0.5 μF total). On the 200 Hz range and below, the capacitance multiplier (paragraph 4.2.3.8) selects the range "capacitors".

When the Model 288 produces an unsymmetrical waveform, the frequency range divides by 10. The microprocessor circuit automatic compensates for this by programming the next higher range.

4.2.3.8 Capacitance Multiplier

Lower frequencies require larger capacitors that often fail to maintain the precise value over time needed for accurate frequencies. To eliminate the need for large capacitors, the Model 288 uses a capacitance multiplier (schematic 0103-00-3004 sheet 6) which controls the current at the TRINODE point. When the VCG current source supplies current (+VI) to the comparator, the capacitance multiplier draws a portion of the current from the TRINODE point. When the VCG current source draws current (–VI) from the comparator, the capacitance multiplier adds current to the TRINODE point.

This effectively decreases the amount of current to the range capacitor, which decreases the time it takes for the capacitor to charge to the comparator sense point; making the frequency lower. Microprocessor circuit data lines, routed through the function generator's data latches, select the capacitance multiplier's control line. TP11 is the capacitance multiplier output. There are no adjustments in this circuit.

4.2.3.9 Triangle Buffer

The triangle buffer (schematic 0103-00-3004 sheet 6) amplifies the triangle generated by charging and discharging the range capacitor. The buffer output (TRIOUT) drives the comparator sense point, the waveform selector on the output assembly, and the sine convertor on the phase lock loop assembly.

The auto cal circuit measure the triangle balance (TRIBAL) relative to the triangle buffer's ground (TRICOM) and produces a triangle balance voltage (VTRIBAL) that adjusts the comparator. The Model 288 stores the triangle balance voltage in the microprocessor circuit. The stored value changes only during the auto cal cycle.

4.2.3.10 Auto Calibration

The function generator's auto calibration circuit (schematic 0103-00-3004 sheet 4) selects and buffers six key points on the function generator assembly during the auto cal cycle. The circuit's output (FGTST) drives the units internal calibration network on the motherboard. In addition, another circuit amplifies the FGTST by +100 and route it to the internal calibration network. There are no test points or adjustments in this circuit.

4.2.4 Phase Lock Loop Assembly

The phase lock loop assembly contains three blocks: the phase lock loop itself, the sine convertor, and the AM modulator. The phase lock loop selects and locks triangle or square wave signal to internal or external reference. The sine convertor transforms the triangle into the sine wave. The AM modulator controls the amplitude modulation of the sine wave signal. All the control lines for this assembly originate from the microprocessor circuit and transfer through the assembly data latches.

4.2.4.1 Phase Lock Loop

Phase lock loop circuit consists of the sine-Z-cross circuit, the source selector circuit, the phase comparator circuit, the phase comparator circuit, the charge pump circuit, and the lock loop filter circuit.

Sine-Zero-Crossing Detector

The sine zero crossing detector (schematic 0103-00-3003 sheet 2) converts the sine wave (SIN 3) from the sine buffer into a square wave As the sine wave passes through its zero crossing point, the output from the crossing detector changes its dc level, thus producing the square wave. This square wave drives the source selector for the phase comparator. All test points and components are located under the shield. TP1 is the sine wave zero crossing output. There are no adjustments in this circuit.

Source Selector

The source selector circuit (schematic 0103-00-3003

sheet 2) selects the reference frequency source for the phase comparator. The source selector selects from two reference frequency sources:SYNTH the internal frequency synthesizer or BXFREQ the external reference source from the Ext Freq In connector. The selector also selects one of the two available variable frequency waveforms: SQWAVE (square wave) and SIN3 (sine wave). When using the internal frequency reference, the comparator receives the square wave as the variable frequency waveform. When using the external frequency reference, the comparator uses the zero-crossed square wave as the variable frequency (triangle and sine wave functions) or square wave (square wave function). The front panel circuit through the microprocessor circuit controls the signal selection and routing. All components are located under the shield. TP2 is the buffered external reference frequency (external signal must be connected to EXT FREQ IN). TP3 is the frequency synthesizer output. There are no adjustments in this circuit.

Phase Comparator

The phase comparator circuit (schematic 0103-00-3003 sheet 2) compares the reference frequency signal and the variable frequency signal and produces an output based on positive edge arrival times of each selected signal. The comparator generates three output conditions on the output lines VLAGR and VLEADR.

1. The reference signal and generated waveform arrive at the same time.
2. The reference signal leads the generated waveform.
3. The reference signal lags the generated waveform.

VLAGR and VLEADR drives the charge pump. All components are located under the shield. There are no test points or adjustments in this circuit.

Charge Pump

The charge pump circuit (schematic 0103-00-3003 sheet 3) controls the current flow to and from the lock-loop filter. The two output line from the phase comparator (VLAGR and VLEADR) regulates the charge pumps current flow. Current flow represents the difference between the selected reference frequency signal and the variable frequency signal which is set from the front panel. The current pulses briefly during the positive edge comparison and then stops. The time difference between the input signals VLAGR and VLEADR determine the amount of current pumped to the lock-loop filter The arrival order of the input signal VLAGR and VLEADR determine the direction of the current flow. If the signals arrive at the same time, no current is pumped to the lock-loop filter. All test points and components are located under the shield. TP7 is the variable lag reference. TP8 is the variable lead reference. There are no adjustments in this circuit.

Lock-Loop Filter

The lock-loop filter circuit (schematic 0103-00-3003 sheet 3) converts the current flow from the charge pump into an error voltage (VLOOP) for the function generator's VCG summing amplifier. The filter smooths the pulsing current flow into a voltage that is the average of the current pulses. The error voltage is positive when the average current is flowing from the filter and negative when the average current is flowing into the circuit. The error voltage VLOOP gradually changes the VCG summing amplifier's output signal (VSUM) changing generators frequency closer the reference frequency.

Under certain conditions the microprocessor circuit disconnects the VLOOP error signal from the VCG summing amplifier. If the reference to variable frequency difference is too great which generates an even greater error in the opposite direction the microprocessor circuit turns on the UNLOCK indicator at the front panel and disconnects the VLOOP signal. When FM or Sweep modulation is selected at the front panel, the VLOOP signal is disconnected, but the UNLOCK indicator is not turned on.

The microprocessor circuit varies the characteristics of the lock-loop filter characteristics based on the selected frequency. During the auto cal cycle, the internal calibration network produces a correction voltage VPHASE.that fine tunes the lock-loop filter. TP9 is the phase lock loop error voltage. There are no adjustments in this circuit.

4.2.4.2 Sine Convertor

The sine convertor consists of three circuits: the variable supply, the sine convertor itself, and the sine buffer.

Variable Supply

The variable supply (schematic 0103-00-3003 sheet 5) produces an isolated ±12V used only by the sine converter. To provide minimum sine distortion, the internal calibration network on the motherboard measures the sine distortion and produces a correction voltage VSINCAL which fine tunes the sine convertor by adjusting the variable supply. There are no test points in this circuit. R97 provides course adjustment of the variable supply.

Sine Converter

The sine convertor (schematic 0103-00-3003 sheet 4) transforms the triangle (TRIOUT from the sine buffer) into a sine wave. The sine convertor uses the logarithmic

response characteristics of the ten matched diodes to approximate a sine wave current output SINCO. TP13 is the sine wave converter output. R33 adjusts the input level of the sine converter.

Sine Buffer

The sine buffer (schematic 0103-00-3003 sheet 4) converts the sine current supplied by the sine converter into two sine wave signals (SIN1 and SIN3). Signal SIN1 drives the function selector on the output assembly, and provides the carrier for the X-Y multiplier (AM). Signal SIN3 is routed to the phase lock-loop's sine zero-crossing Circuit. TP10 monitors the sine wave buffered output. R64 adjusts signal dc level. R208 adjusts sine wave amplitude.

4.2.4.3 Amplitude Modulator

The amplitude modulator consists of two circuits: the X-Y multiplier and the AM buffer.

X-Y Multiplier Circuit.

The X-Y multiplier (schematic 0103-00-3003 sheet 5) is a transconductance amplifier that produces differential currents that drive the AM buffer. The sine buffer from the sine convertor provides the multiplier's carrier (X) input SIN1. The external Mod In signal supplies the circuit's modulation (Y) input MOD IN. During the auto cal cycle, the Model 288's internal calibration network measures the +PK and -PK signals (peak detector on the output board). The microprocessor circuits stores a correction value based on the measurement. During the control cycle, the DAC/sample and hold circuit converts the value into a voltage VAMCAL that fine tunes the X-Y multiplier. There are no test points in this circuit. R102 provides course adjustment of the sine wave input. R108 provides course adjustment of the modulation signal input.

AM Buffer

The AM buffer (schematic 0103-00-3003 sheet 5) is a differential amplifier that combines the two signals from the X-Y multiplier into one symmetrical around zero signal. The voltage level is compatible with the other signals selected at the output assembly. TP12 monitors the AM buffer output. R125 provides dc level offset adjustment.

4.2.5 Output Assembly

This assembly contains circuits that select the waveform, set the output level of the waveform, and provide waveform amplification. All waveforms can be dc offset Waveform selection, amplitude, and dc offset are set from the front panel and processed by the microprocessor circuit. The assembly input registers read the data from the microprocessor circuit and routes the control lines to the circuits. This assembly contains the following circuits:

Function Selector.
Preamplifier.
R-R2 Ladder.
Power Amplifier.
–20dB Attenuator.
Balanced Drivers.
Peak Detector.

4.2.5.1 Function Selector

The function selector (schematic 0103-00-3002 sheet 2) selects and routes either the square wave, triangle wave, sine wave, or amplitude modulated signal to the preamplifier. The triangle wave TRIOUT from the function generator assembly, sine wave SIN1 from the phase lock loop assembly, and amplitude modulated signal AMSIG form the phase lock loop assembly are unchanged. But, the square wave SQWAVE from the function generator assembly is shaped, and its amplitude set to the same level as the other signals. The output level from the function selector for all waveforms is 2Vp-p. The front panel selections, processed by the microprocessor circuit, select and route the waveforms to the preamplifier. TP1 is the shaped square wave input. There are no adjustments in this circuit.

4.2.5.2 Preamplifier

This circuit (schematic 0103-00-3002 sheet 2) amplifies the selected 2Vp-p waveform (square wave, triangle wave, sine wave, and amplitude modulation signal) from the function selector to a 6Vp-p signal (PREAMP) which drives both the R-R2 Ladder and the Peak Detector . TP2 is the preamplifier output. C22 adjusts frequency peaking.

4.2.5.3 R-R2 Ladder

The R-R2 ladder digital binary attenuator (schematic 0103-00-3002 sheet 2) provides 0 to 20 dB of variable attenuation of the output from the preamplifier. With the exception of the first step of attenuation, each selected step doubles the attenuation of the previous step. Attenuation depends on the front panel selections and microprocessor circuit processing. There are no test points or adjustments in this circuit.

4.2.5.4 Power Amplifier

The power amplifier, a fixed gain, wide-band inverting amplifier with a push-pull complimentary symmetry

output stage, (schematic 0103-00-3002 sheet 2) provides the gain and drive needed for the balanced and unbalanced outputs and –20 dB attenuator. The amplifier receives its input (PA IN) from the R-R2 ladder. Another input, VOFST, supplies the dc offset level. VOFST also allows the internal calibration network through auto cal to correct for amplifier aging and temperature effects. Two diodes, CR29 and CR30, protects the four output transistor that drive the output.

4.2.5.5 –20 dB Attenuator

The –20 dB attenuator circuit (schematic 0103-00-3002 sheet 6) reduces the power amplifier PA OUT level by either 0dB or –20 dB. The microprocessor circuit selects the attenuator based on the output level selected via the front panel. This attenuator together with the R-R2 ladder and the –40 dB attenuator on the balanced and unbalanced network sets the output level. There are no test points or adjustments in this circuit.

4.2.5.6 Unbalanced and Balanced Drivers

This circuit (schematic 0103-00-3002 sheet 6) routes the signal from the –20 dB attenuator to either the unbalanced output, UBOUT, or the balanced drivers. TP6 is the negative balance driver output. TP7 is the positive balance driver output. There are no adjustments in this circuit. The unbalanced signal is routed to the unbalanced output attenuator network and impedance control circuits on the A2 Motherboard unchanged as (UBOUT). The unbalanced signal (UNBAL OUT) is routed through two complimentary drivers which produces two 180° out signals, BOUT1 and BOUT2. Both signals drive the peak detector and balanced output attenuator network and impedance control circuits on the motherboard.

4.2.5.6 Peak Detector

During the auto cal cycle, the peak detector circuit (schematic 0103-00-3002 sheet 7) processes four signal lines generated on the output assembly. The peak detector circuit consists of the input selector and its positive and negative peak detectors, as well as a harmonic distortion notch filter.

For ac measurements the input selector routes one of the four inputs to the peak detector: preamplifier output PREAMP, balanced driver outputs BOUT 1 and BOUT2 , and power amplifier output PAOUT. The peak detector senses the positive and negative value and produces a dc equivalent value for the internal calibration network. For dc measurements the input selector chooses one of the four inputs and routes it directly to the +PK The sine wave from PREAMP drives the harmonic distortion notch filter whose output voltage, THD, represents the sine's distortion content. The voltage THD corrects for minor distortions in the sine convertor circuit

TP8 is the total harmonic distortion notch filter output. TP9 is the positive peak detector output (not measurable). TP10 is the negative peak detector output (not measurable). There are no adjustments in this circuit.

4.2.6 Rear Panel

This assembly (refer to the instrument schematic 0004-00-0510) provides the operator with line power connection, voltage selection facilities, fuse protection, and GPIB connection. The selected input line voltage of 100/120/220/240 Vac is converted to ≈8 Vac, ≈32 Vac, and ≈52 Vac for use by the individual power supply circuits located on the A2 Motherboard Assembly. ≈9 Vac is provided to the Front Panel Assembly for display power. Front Panel Assembly provides On/Off switching.

SECTION 5
CALIBRATION PROCEDURE

5.1 CALIBRATION

This section contains the Model 288's calibration procedures (paragraph 5.2).

Wavetek maintains a factory repair department for those customers not possessing the necessary personnel or test equipment to calibrate or repair the instrument. Before returning the instrument, contact the Customer Service Department by calling or writing:

Wavetek San Diego, Inc.
9045 Balboa Ave.
San Diego, CA 92123
Telephone: (619) 279-2200
TWX: (910) 335-2007

The Model 288 provides the user with two calibration methods: Auto Cal and Calibrate.

5.1.1 Auto Cal

Auto Cal (automatic calibration) provides a quick method of calibrating the Model 288 without using external test equipment. Auto Cal does not require opening the instrument or making adjustments. Use Auto Cal when Model 288 accuracy is critical, long term instrument storage, following drastic changes in the environment, or when the operator believes Auto Cal is necessary. Paragraph 5.3.1 describes the Auto Cal procedure.

5.1.2 Calibrate

The calibrate mode provides a more extensive method of calibrating the Model 288 using external test equipment. Calibrate does require opening the instrument and making adjustments. Use Calibrate when the Model 288 displays "CAL REQUIRED" or "FAILED AUTO CAL", when the Model 288 has been repaired or fails the Performance Verification procedure (Paragraph 2.), or when routine calibration is scheduled. Paragraph 5.3.2 describes the Calibrate procedure.

5.2 AUTO CAL PROCEDURE

To Auto Cal the Model 288, perform the following steps. Auto Cal requires no external test equipment, in fact, nothing must be connected to the input connectors otherwise the Auto Cal circuitry could miscalibrate the instrument. Also, disconnect all outputs from the instrument otherwise the sudden changes in the instrument's output waveforms could damage external equipment.

1. Turn on the Model 288 and allow it to warm up for 20 minutes. Pressing the Calibrate key prior to the 20 minute warm up time displays the count-down time to Auto Cal. The instrument automatically Auto Cals after the 20 minute count down. However, pressing any other key during the count down aborts Auto Cal and returns the instrument to normal operation.

   Remember to remove all input and output connections to the Model 288 before pressing Auto Cal.

2. Press the Calibrate key and allow the unit time to complete the Auto Cal. When completed successfully, the Model 288 displays AUTOCALIBRATED and the unit returns to its last setting. If the Auto Cal fails the Model 288 displays an error message which identifies the parameter - ERR (Keyword). If this occurs occasionally, try to Calibrate the unit again. Note the error keywords and report the errors when the unit is returned for scheduled maintenance.

5.3 CALIBRATE PROCEDURE

To calibrate the Model 288 perform the following steps. This procedure contains five separate steps which the Model 288 guides you through. If a specific step needs adjustment, use the cursor key to advance to the desired step.

Table 5-1. Recommended Test Equipment

Test Equipment	Recommended Model
Scope	Tektronix 2465 or equiv.
Distortion Analyzer	Hewlett Packard 8903B or equiv.
Digital Voltmeter	Not Critical
Function Generator	Not Critical
Phase Meter (optional)	Hewlett Packard 5335A or Hewlett Packard 3575A

NOTE

Use rear panel for all ground connections unless otherwise specified.

All indications and waveforms are referenced to chassis ground unless otherwise specified.

STEP 1 Initial Setup

1. Remove five top cover screws.

NOTE

Keep the top shield and top cover in place during the procedures except when necessary to make an internal adjustment.

2. Perform the turn-on procedures as shown in paragraph 2.3.3..

WARNING

Dangerous voltages are present with the covers removed. Where maintenance can be performed without power applied, the power should be removed. Battery voltage is present even with AC power cable removed.

3. Slide the top cover back. Press and hold down the internal calibration switch S1 (figure 5-1) while pressing the front panel CALIBRATE key.
4. Verify the Model 288 display indicates WVTK SN XXXXXX or WVTK SN 0. Press the front panel —> CURSOR key.
5. Verify the Model 288 display flashes CALIBRATING then indicates USER SN XXXX or USER SN 0.

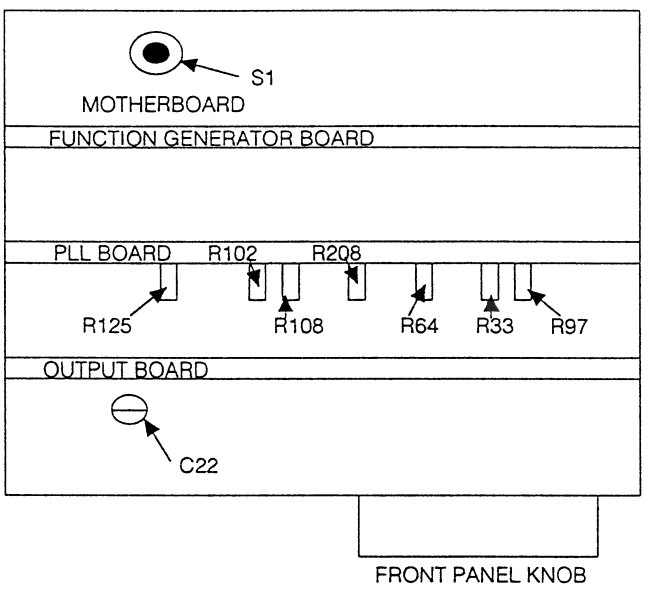

Figure 5-1. Calibration Location

STEP 2 Adjust Square Wave

Before performing any adjustment procedure, the initial setup (Step 1 of this procedure) must be completed.

1. Verify that the Model 288 display indicates USER SN XXXX or USER SN 0.
2. Verify that the Model 288 display flashes CALIBRATING then indicates PEAKING C22.
3. Connect the test equipment as shown in figure 5-2.

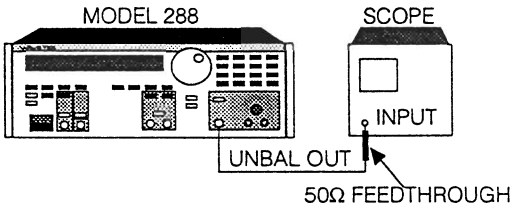

Figure 5-2. Square Wave Adjust Setup

4. Set the scope controls to display the Model 288 output. Verify that the scope displays peak-to-peak aberrations are greater than 3% and less than 5%.

   If incorrect, adjust C22 (figure 5-1) until the reading is within specified limits.

5. On the Model 288,

   Press the –> Cursor key. Verify the display flashes CALIBRATING then indicates R33, 97, 64 VSINE XX .

STEP 3 Adjust Sine Wave.

1. Connect the test equipment as shown in figure 5-3.

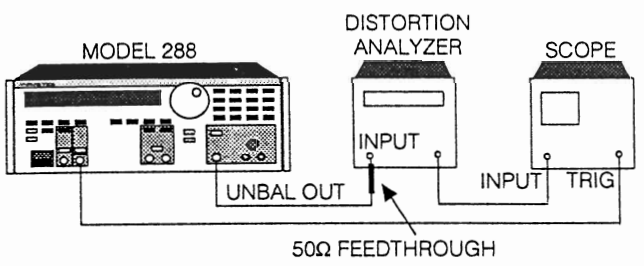

Figure 5-3. Sine Wave Adjust Setup

2. Set the distortion analyzer controls to display the Model 288 output signal Total Harmonic Distortion (THD) in dB.

3. On the Model 288, slowly adjust the Front Panel Knob (figure 5-1) until the THD as displayed on the distortion analyzer is minimum. Verify that reading is ≤ – 50 dB at 10 kHz.

   If correct, proceed to STEP 3 Adjust Amplitude.

4. If incorrect, set the scope controls to display the distortion analyzer output.

   Adjust R33 (figure 5-1) until waveform peaks are clearly visible in the residue.

   Adjust R97 until waveform peaks are symmetrical, one above the average value of the residue signal and one below.

5. Adjust R33 until the peaks disappear back into the residue.

6. Observe the overall ripple in the residue in the are of the waveform zero crossings as displayed on the scope. Turn the Model 288 Front Panel Control Knob CW until the waveform peaks are clearly visible in the residue and repeat step 6.

   If the overall ripple has decreased, continue the procedure always turning the Model 288 Front Panel Knob CW.

   If the overall ripple has increased, continue the procedure always turning the Model 288 Front Panel Knob CCW.

7. Repeat steps 5 and 6 until:

   The amplitude of the overall ripple in the residue signal is minimum as displayed on the scope.

   The THD as measured on the distortion analyzer is ≤ – 50 dB.

8. Disconnect the test equipment.

9. Connect the digital multimeter + lead to TP10 and – lead to TP11. Verify that the digital multimeter displays <1 mVdc.

   If incorrect, adjust R64 until the reading is within specified limits.

10. On the Model 288, press the –> Cursor key. Verify the display flashes CALIBRATING then indicates SIN AMP R208.

STEP 4 Adjust Amplitude

1. Connect the test equipment as shown in figure 5-4.

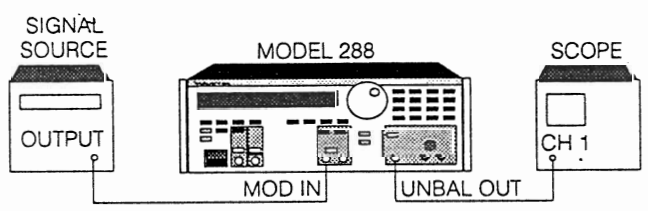

Figure 5-4. Adjust Amplitude Setup

2. Verify that the digital voltmeter reads 7.071 Vrms ±100 mVrms.

- If incorrect, adjust R208 (figure 5-1) until reading is within specified limits.

3. On the Model 288,

   Press the —> CURSOR key.

   Verify that the display indicates CALIBRATING for approximately 5 seconds.

   Verify that the display indicates ADJ AM POTS.

STEP 5 Adjust Amplitude Modulation

1. Connect the test equipment as shown in figure 5-5.

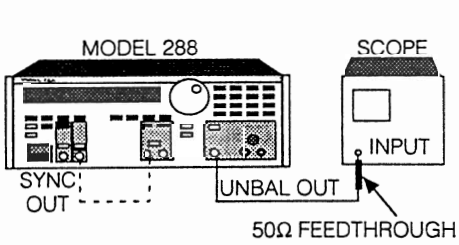

Figure 5-5. Adjust AM Setup

2. Set the scope controls to display the Model 288 output. Verify the scope displays carrier null with <50 mVp-p AC ripple and <5 mVdc offset.

   If carrier null is incorrect, adjust R108 (figure 5-1) for minimum indication..

   If DC offset is incorrect, adjust R125 until reading is within specified limits.

3. On the Model 288,

   Press the —> CURSOR key.

   Verify that the display flashes CALIBRATING for approximately 1 second. then displays AM MOD NULL.

   Connect a jumper between A7TP11 and TP13.

4. Connect a 50Ω BNC cable between the Sync Out and the Mod/VCF In connectors

5. Verify that the scope displays carrier null with <20 mVp-p AC ripple.

   If incorrect, adjust R102 for minimum indication

6. On the Model 288,

   Press the —> Cursor key.

   Verify that the display indicates CALIBRATING for approximately 5 seconds.then displays PHASE 0 XX,XXX

STEP 6 Adjust Phase

1. Connect the test equipment as shown in figure 5-6.

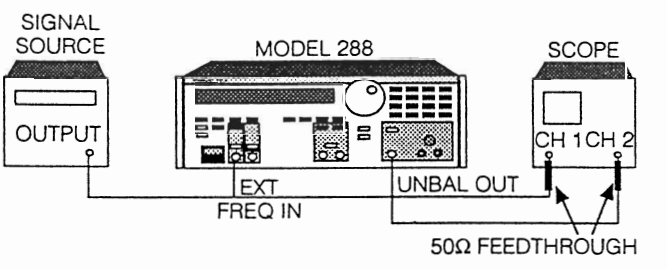

Figure 5-6. Adjust Phase Setup

2. Set the signal source controls as follows:

   Set Function to Sine.

   Frequency to 2kHz.

   Output Level to 5V p-p.

3. Set the scope controls as follows:

   Trigger to channel 1.

   Channel 1 and 2 vertical controls so that settings are identical, and waveforms are displayed.

   Channel 1 and 2 horizontal controls so that settings are identical, and waveforms are displayed.

   Adjust the controls to accurately superimpose both waveforms.

   Select channel 2 Invert.

   Select 1 and 2 Add.

4. On the Model 288,

   Adjust the Front Panel Knob to null the added waveform on the scope display.

   Press the —> CURSOR key.

   Verify that the display flashes CALIBRATING for approximately 1 second.

   Verify that the display indicates PHASE +180 XX,XXX.

5. Set the scope controls as follows:

   Set Channels 1 and 2 Add to Off.

Channel 1 and 2 vertical controls so settings are identical, and waveforms are displayed.

Channel 1 and 2 horizontal controls so settings are identical, and waveforms are displayed.

Adjust the controls to accurately superimpose both waveforms.

Select channel 2 normal (non-invert).

Set Channels 1 and

6. On the Model 288,

   Adjust the Front Panel Knob to null (minimum displayed signal) the added waveform on the scope display.

   Press the —> CURSOR key.

   Verify that the display flashes CALIBRATING for approximately 1 second then displays PHASE –180 XX,XXX.

   Adjust the Front Panel Knob to null (minimum displayed signal) the added waveform on the scope display.

7. On the Model 288,

   Press the —> CURSOR key.

   Verify that the display flashes CALIBRATING for approximately 1 second then displays SQ PHASE 0 XX,XXX.

8. Set the Signal Source controls as follows:

   Function to Square.

   Frequency to 2kHz.

   Output Level to 5V p-p.

9. Set the scope controls as follows:

   Trigger on channel 1.

   Channel 1 and 2 vertical controls so settings are identical, and waveforms are displayed.

   Channel 1 and 2 horizontal controls so settings are identical. and waveforms are displayed.

   Adjust controls to accurately superimpose both waveforms.

   Select channel 2 Invert.

   Select 1 and 2 Add.

10. On the Model 288,

    Adjust the Front Panel Knob to null the added waveform on the scope display.

    Press the CALIBRATE key.

    Verify that the display indicates CALIBRATION OFF.

11. Remove the power and disconnect the test equipment. Install top cover .

SECTION 6
TROUBLESHOOTING

6.1 INTRODUCTION

This section provides a method of troubleshooting the Model 288 to the circuit level. The Model 288 uses several "tools" in addition to conventional operating failures, such as blown fuses and nonoperating functions. The Model 288 produces error messages which this section uses to guide you to a probable faulty block. Also, the Model 288's performance verification procedure (paragraph 2.3.5) tests the units operating parameters. If the unit fails any one the the performance verification tests, proceed to the manual calibration procedure (section 5).

6.2 FACTORY REPAIR

Wavetek maintains a factory repair department for those customers not possessing the necessary personnel or test equipment to maintain the instrument. If an instrument is returned to the factory for calibration or repair, a detailed description of the specific problem should be attached to minimize turnaround time.

6.3 BEFORE STARTING

No troubleshooting guide can possibly cover all the potential problems, the aim of this this section is to guide you to a figure that represents each of the Model 288's assemblies. These figures contain information about unit setup and test conditions for test point on the assembly. Also, it is necessary to become familiarize with the instrument by reviewing the function description and the detailed circuit description (section 4) in conjunction wit the schematics (section 7). Successful troubleshooting depends upon understanding the circuit operation within each function block as well as the block relationships.

6.3.1 Inspection

Before before beginning the troubleshooting procedure, use the following inspection procedures to locate obvious malfunctions with the Model 288.

1. Inspect all external surfaces of Model 288 for physical damage, breakage, loose or dirty contacts, and missing components.
2. Remove top cover, shield, and bottom cover to access components.

WARNING

The Model 288 contains high voltages. After power is removed, discharge capacitors to ground before working inside the instrument to prevent electrical shock.

CAUTION

Do not disconnect or remove any board assemblies in the Model 288 unless the instrument is unplugged. Some board assemblies contain devices that can be damaged if the board is removed with the power on. Several components, including MOS devices, can be damaged by electrostatic discharge. Use conductive foam and grounding straps when servicing is required around sensitive components. Use care when unplugging IC's from high-grip sockets.

3. Inspect printed circuit board surfaces for discoloration, cracks, breaks, and warping.
4. Inspect printed circuit board conductors for breaks, cracks, cuts, erosion, or looseness.
5. Inspect all assemblies for burnt or loose components.
6. Inspect all chassis-mounted components for looseness, breakage, loose contacts or conductors.
7. Inspect the Model 288 for disconnected, broken, cut, loose, or frayed cables or wires.

6.4 TROUBLESHOOTING

This troubleshooting procedure relies on the the Model 288's error messages and performance verification failures. If during the normal operation the Model 288 fails, note the conditions and consult this table for the closest possible problem.

Table 6-1 lists the Models 288's error messages and references the recommended troubleshooting figure or

figures. Table 6-2 lists the items from the performance verification procedure and the recommended troubleshooting figures.

All control and signal lines, as well as voltages, are routed though the Motherboard; see figure 6-1. Check the Microprocessor circuit by verifying the flashing Life light, if not check the supplies to the circuit. Also, remove all boards

Using the Troubleshooting Figures

The troubleshooting figures contains test setup instructions and test point data. Use these figures by checking the output test points first, usually the right side of the block diagram, and proceeding by step back through the circuits. Once the suspected circuit has been isolated, use the appropriate assembly drawing, schematic, and parts list to aid in isolating the faulty component. Remember, the circuit description, section 4, provides a functional and detailed description of the circuit.

Table 6-1. Error Messages

Error Message	Troubleshoot
VCGZERO VFREQ VFREQOS SPOSVCGOFF SNEGVCGOFF VTRIBAL SYMM50PCT POSVCGOFF SWPLENGTH SCALE TOFR7 TOFR6 TOFR5 TOFR4 TOFR3 COMP9+ COMP8+	Function Generator - Figure 6-7 Motherboard - Figures 6-1, 6-3, and 6-8 Front Panel - Figure 6-2
FINDNOTCH OFSTZERO OFSTGAIN BALOFFST SINEAMPL TRIAMPL SQURAMPL BALAMPL VSINCAL VAMCAL	Phase Lock Board - Figure 6-6 Output Board - Figure 6-4 Motherboard - Figures 6-1, 6-3, and 6-8

Table 6-2. Performance Verification Failures

Test Failure	Troubleshoot
Frequency Range Frequency Resolution Symmetry VCF/FM Operation	Function Generator - Figure 6-7 Motherboard - Figure 6-1, 6-3, and 6-8 Front Panel - Figure 6-2 Phase Lock Board (Synth.) Figure 6-6
Waveform and Sweep Pulse Characteristics Output Verification AM Verification Sine Wave Purity Amplitude Accuracy DC Offset/Attenuator External Lock	Output Board - Figure 6-4 Phase Lock Board - Figure 6-6 Function Generator - Figure 6-7 Motherboard - 6-1, 6-3, and 6-8

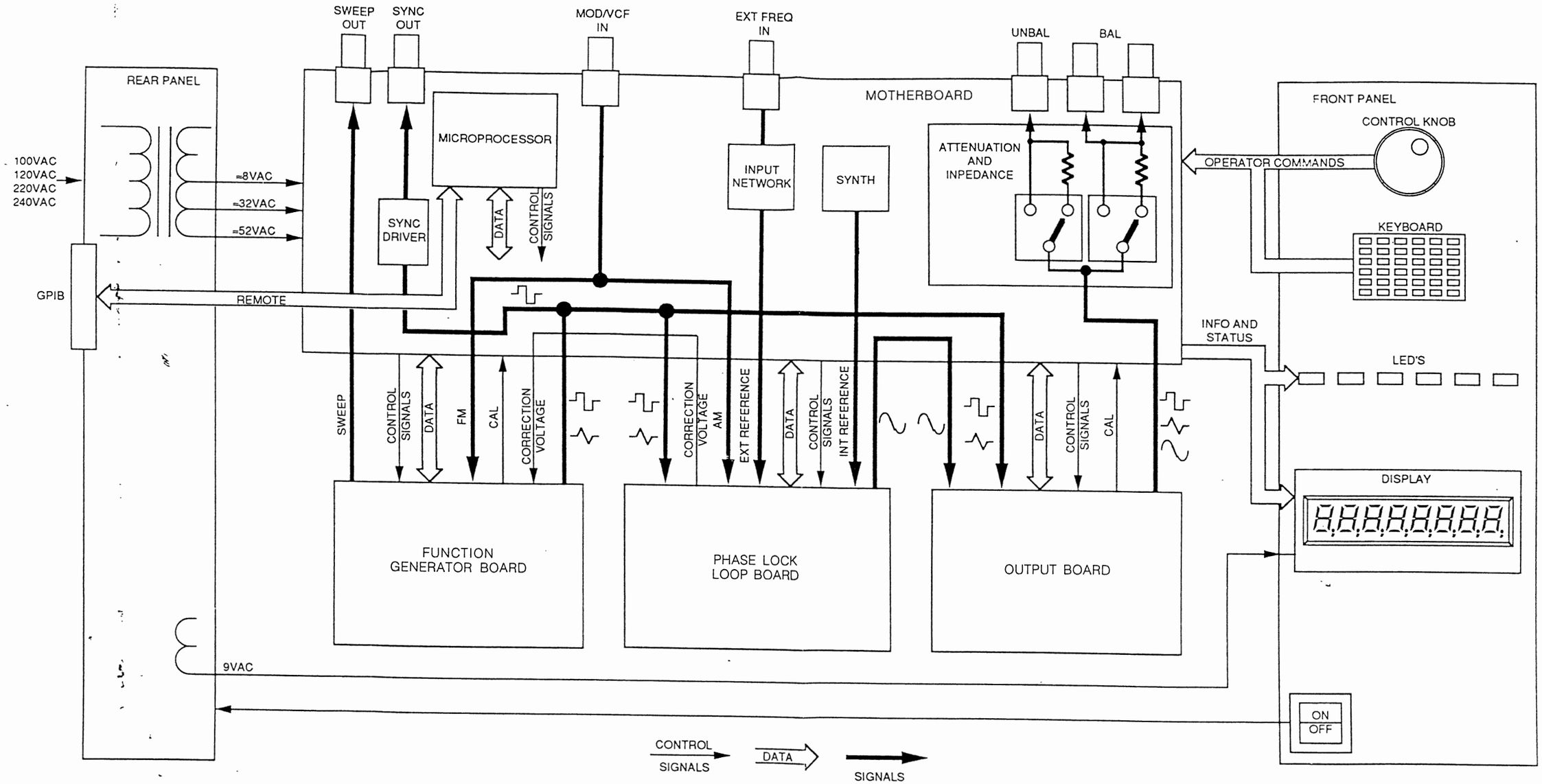

BLOCK DIAGRAM

Figure 6-1. Instrument (Sheet 1 of 2).

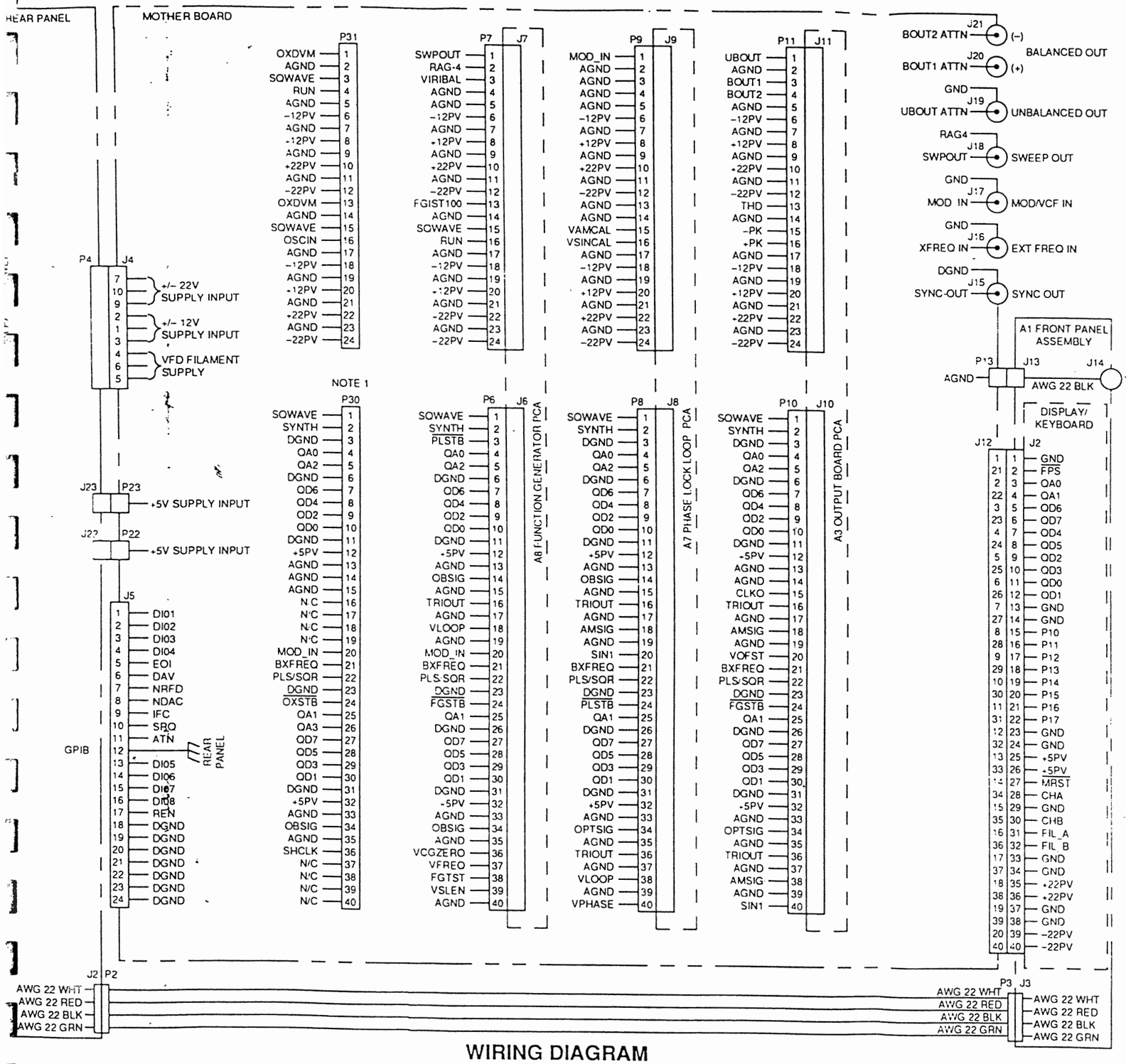

WIRING DIAGRAM

NOTES:

1. P30 AND P31 NOT USED. INFORMATION PROVIDED FOR TROUBLESHOOTING PURPOSES ONLY.

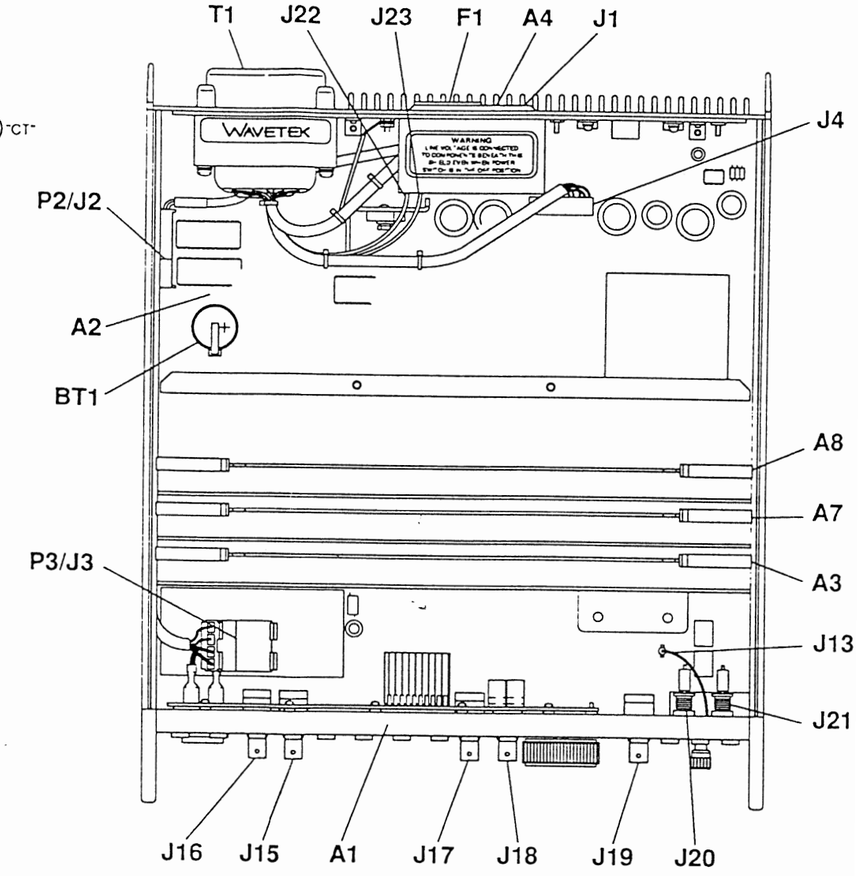

ASSEMBLY AND CABLE LOCATOR – TOP VIEW

Figure 6-1. Instrument (Sheet 2 of 2).

NOTES:

1. UNLESS OTHERWISE SPECIFIED:
   RESISTANCE IS IN Ω (METAL FILM 1/8W,±1%)
   CAPACITANCE IS IN µF
   INDUCTANCE IS IN µH

2. UNLESS OTHERWISE SPECIFIED, INITIAL SETUP FOR VOLTAGES AND WAVEFORMS IS:

   SET POWER TO ON.
   PRESS RESET KEY.
   WAIT 20 MINUTES.
   PRESS CALIBRATE KEY.
   VERIFY DISPLAY SHOWS AUTOCALIBRATED.

3. UNLESS OTHERWISE SPECIFIED, ALL VOLTAGE READINGS AND WAVEFORMS TAKEN WITH RESPECT TO CHASSIS GROUND.

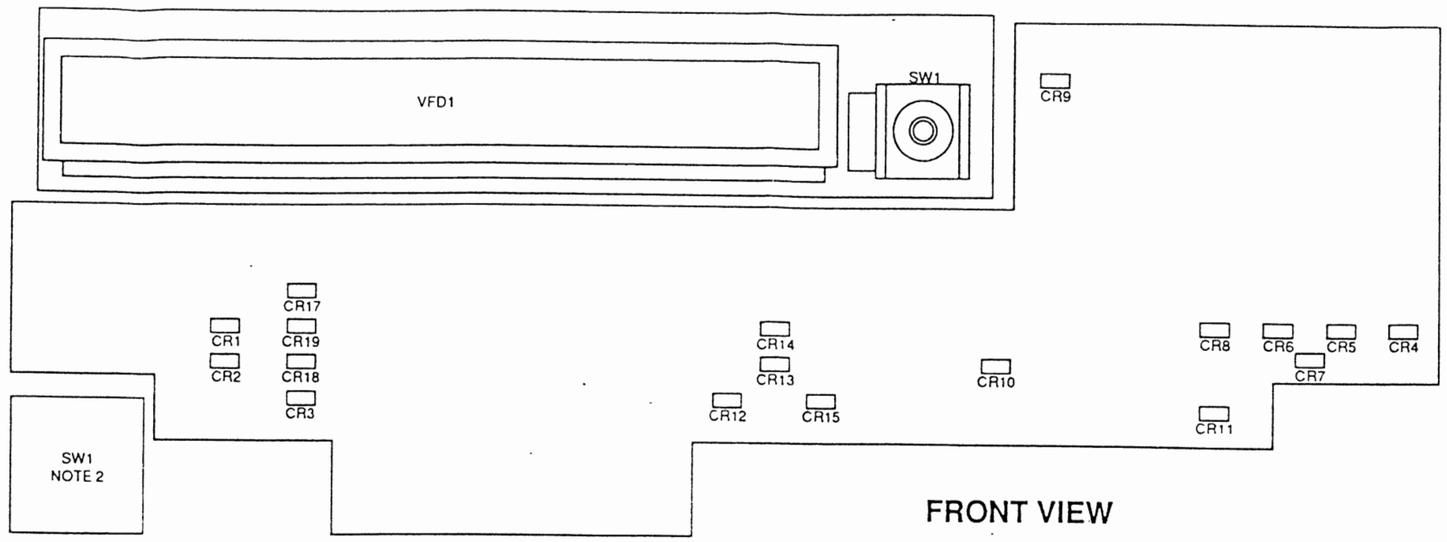

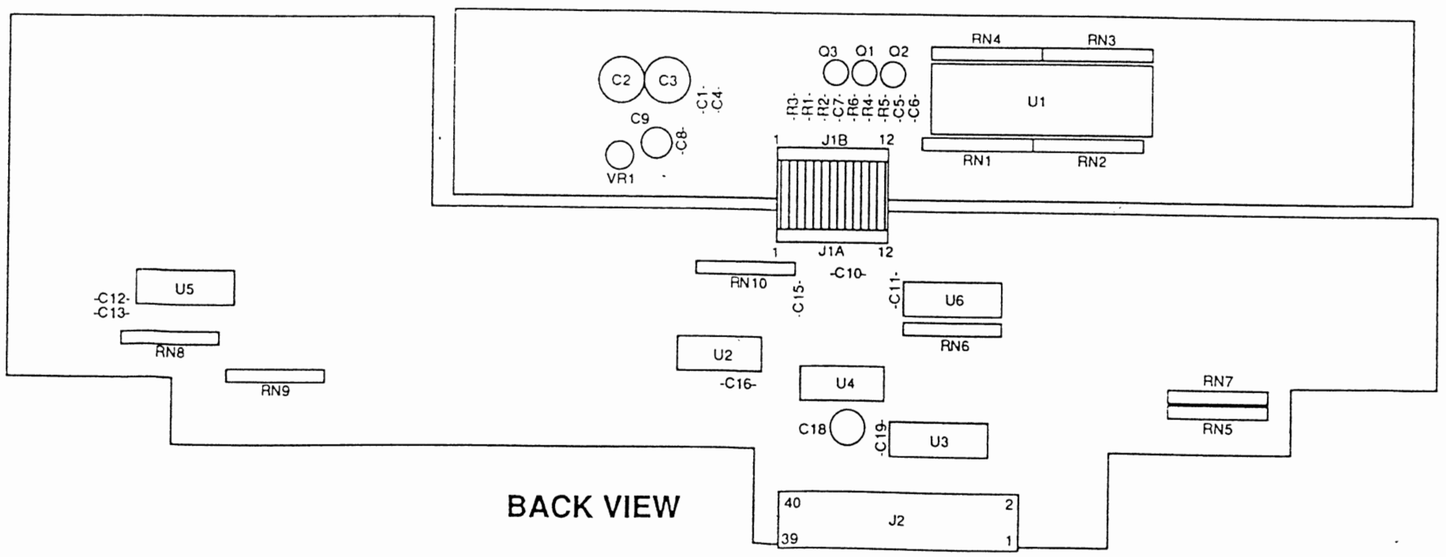

Figure 6-2. Front Panel (Sheet 1 of 2).

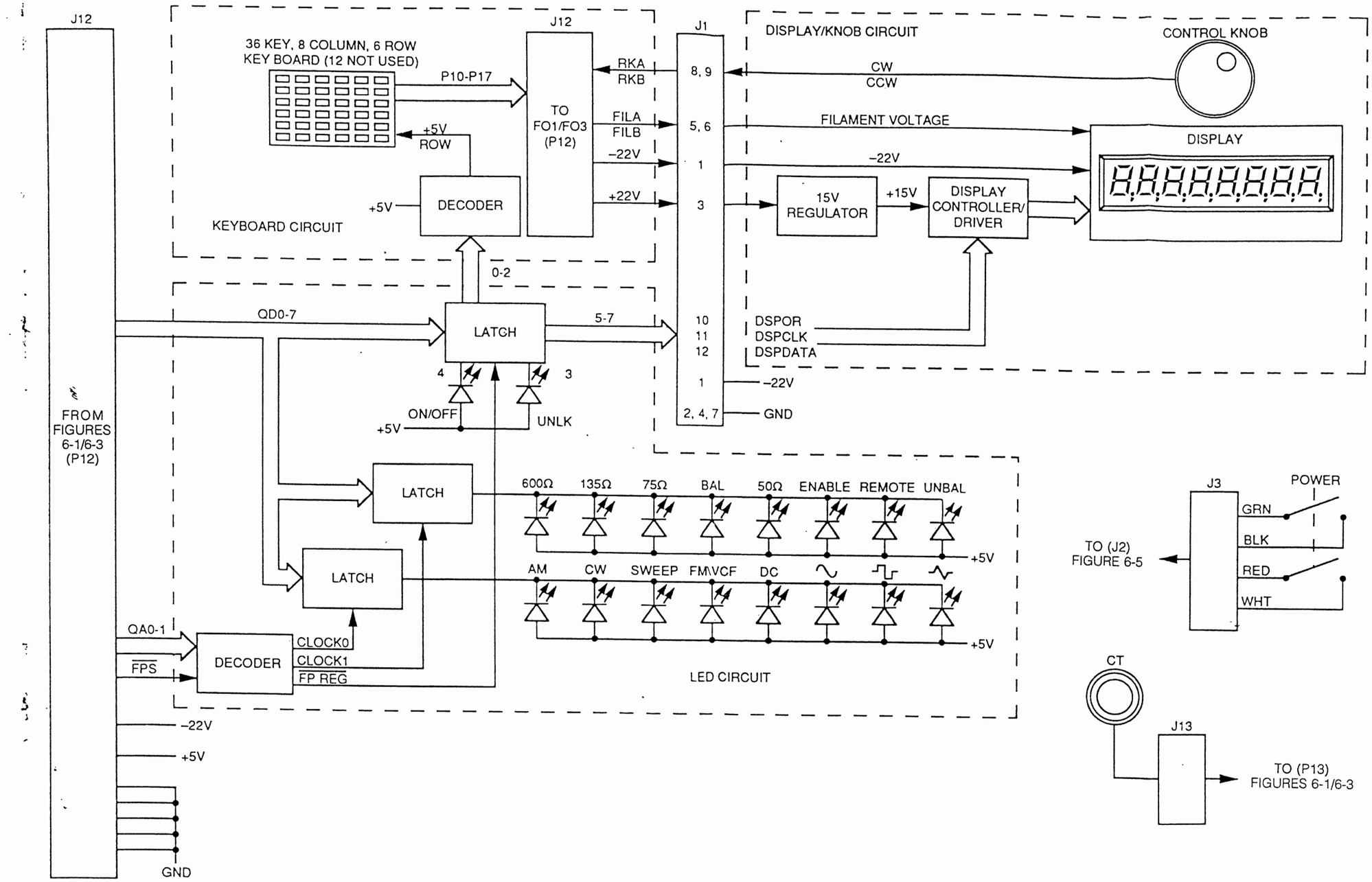

Figure 6-2. Front Panel (Sheet 2 of 2).

NOTES:

1. UNLESS OTHERWISE SPECIFIED:
   RESISTANCE IS IN Ω (METAL FILM 1/8W,±1%)
   CAPACITANCE IS IN µF
   INDUCTANCE IS IN µH

2. UNLESS OTHERWISE SPECIFIED, INITIAL SETUP FOR VOLTAGES AND WAVEFORMS IS:

   SET POWER TO ON.
   PRESS RESET KEY.
   WAIT 20 MINUTES.
   PRESS CALIBRATE KEY.
   VERIFY DISPLAY SHOWS AUTOCALIBRATED.

3. UNLESS OTHERWISE SPECIFIED, ALL VOLTAGE READINGS AND WAVEFORMS TAKEN WITH RESPECT TO CHASSIS GROUND.

4. NOT FUNCTIONAL — TP1.

5. GROUND — TP2, TP6, TP8, TP11 AND TP16.

6. NOT USED — TP4, TP12, AND TP13.

7. SIGNAL MEASURED WITH 1kHz AT 1Vp-p SINE WAVE SIGNAL. CONNECTO TO EXTERNAL FREQUENCY INPUT. SELECT EXTERNAL LOCK ON INDICATOR TO ON.

8. * DENOTES CONTROL SIGNAL.

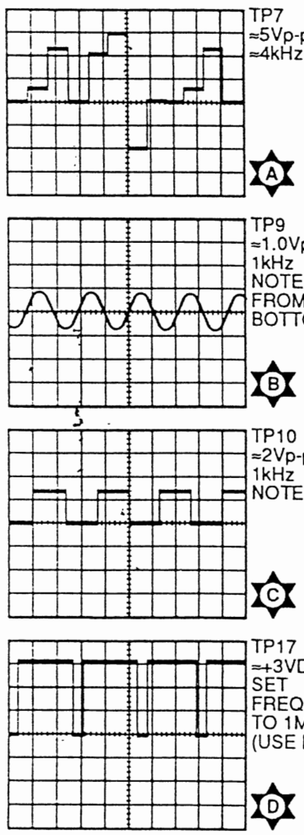

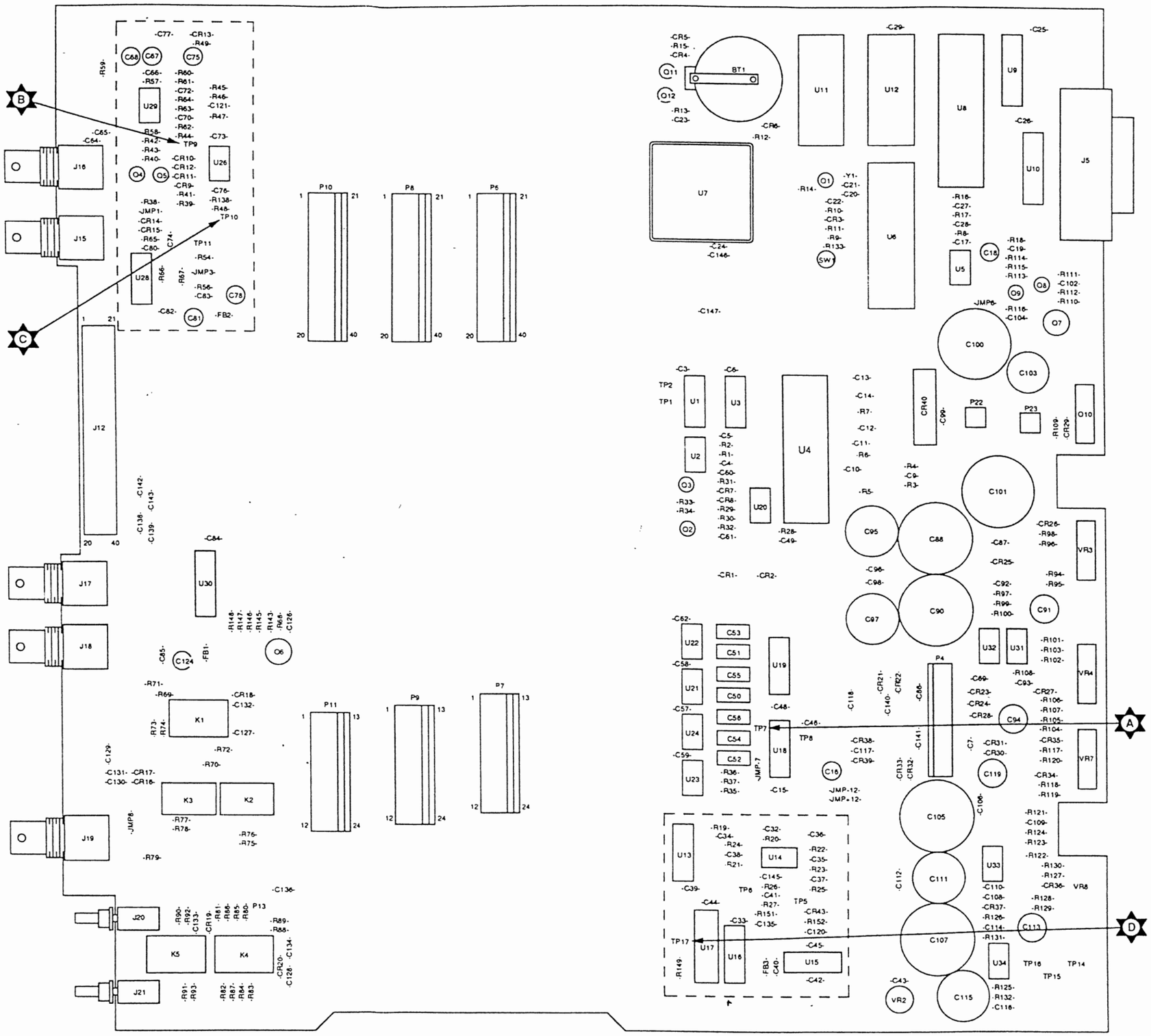

Figure 6-3. Motherboard (Sheet 1 of 2).

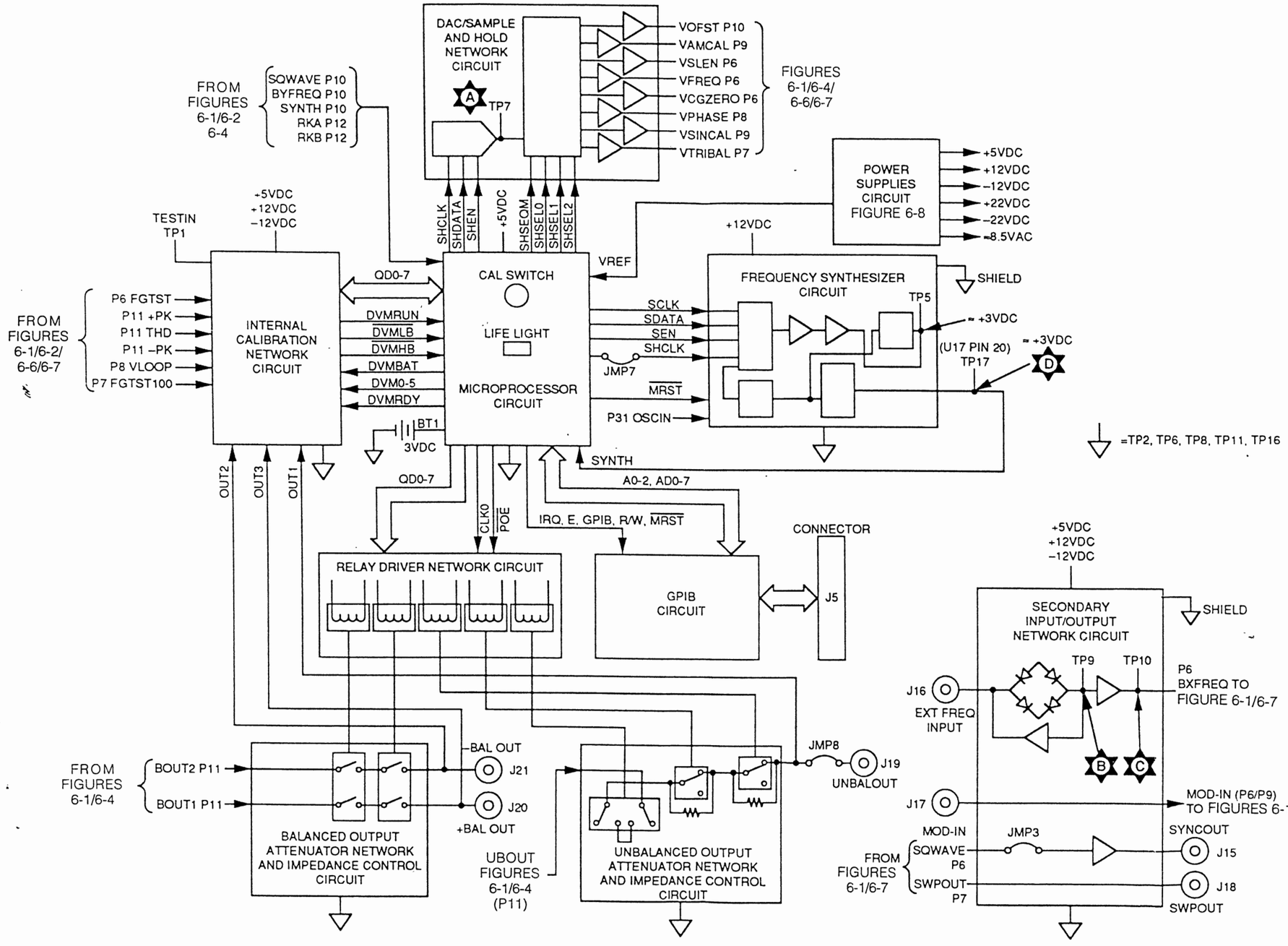

Figure 6-3. Motherboard (Sheet 2 of 2).

NOTES:

1. UNLESS OTHERWISE SPECIFIED:
   RESISTANCE IS IN Ω (METAL FILM 1/8W,±1%)
   CAPACITANCE IS IN μF
   INDUCTANCE IS IN μH

2. UNLESS OTHERWISE SPECIFIED, INITIAL SETUP FOR VOLTAGES AND WAVEFORMS IS:

   SET POWER TO ON.
   PRESS RESET KEY.
   WAIT 20 MINUTES.
   PRESS CALIBRATE KEY.
   VERIFY DISPLAY SHOWS AUTOCALIBRATED.

3. UNLESS OTHERWISE SPECIFIED, ALL VOLTAGE READINGS AND WAVEFORMS TAKEN WITH RESPECT TO ANALOG/DIGITAL GROUND.

4. ANALOG GROUND — TP3 AND TP5.

5. NOT MEASURABLE — TP 9 AND TP10.

6. SIGNAL MEASURED WITH FUNCTION SET TO SQUARE.

7. SIGNAL MEASURED WITH OUTPUT SET TO 600Ω.

8. SIGNAL MEASURED WITH FREQUENCY AT =10KHz TUNE TO MINIMUM SIGNAL.

9. * DENOTES CONTROL SIGNAL.

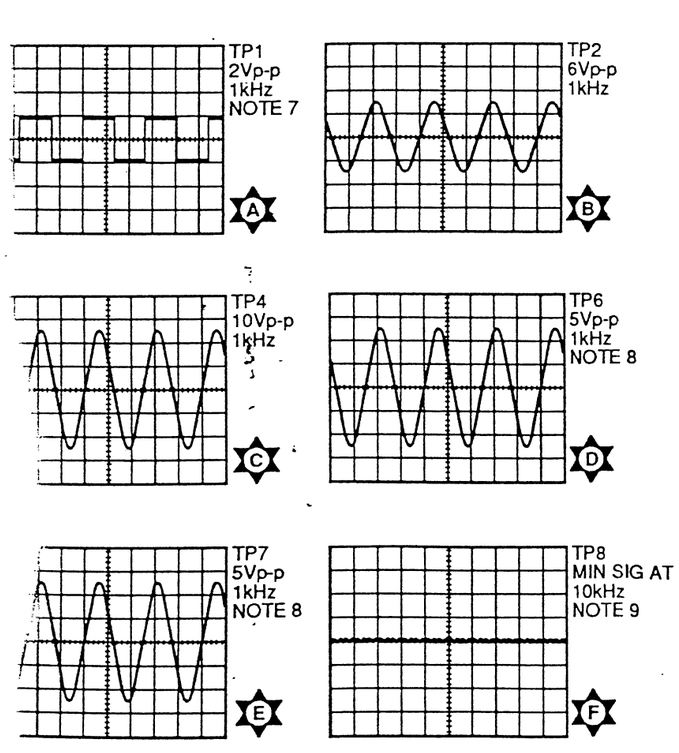

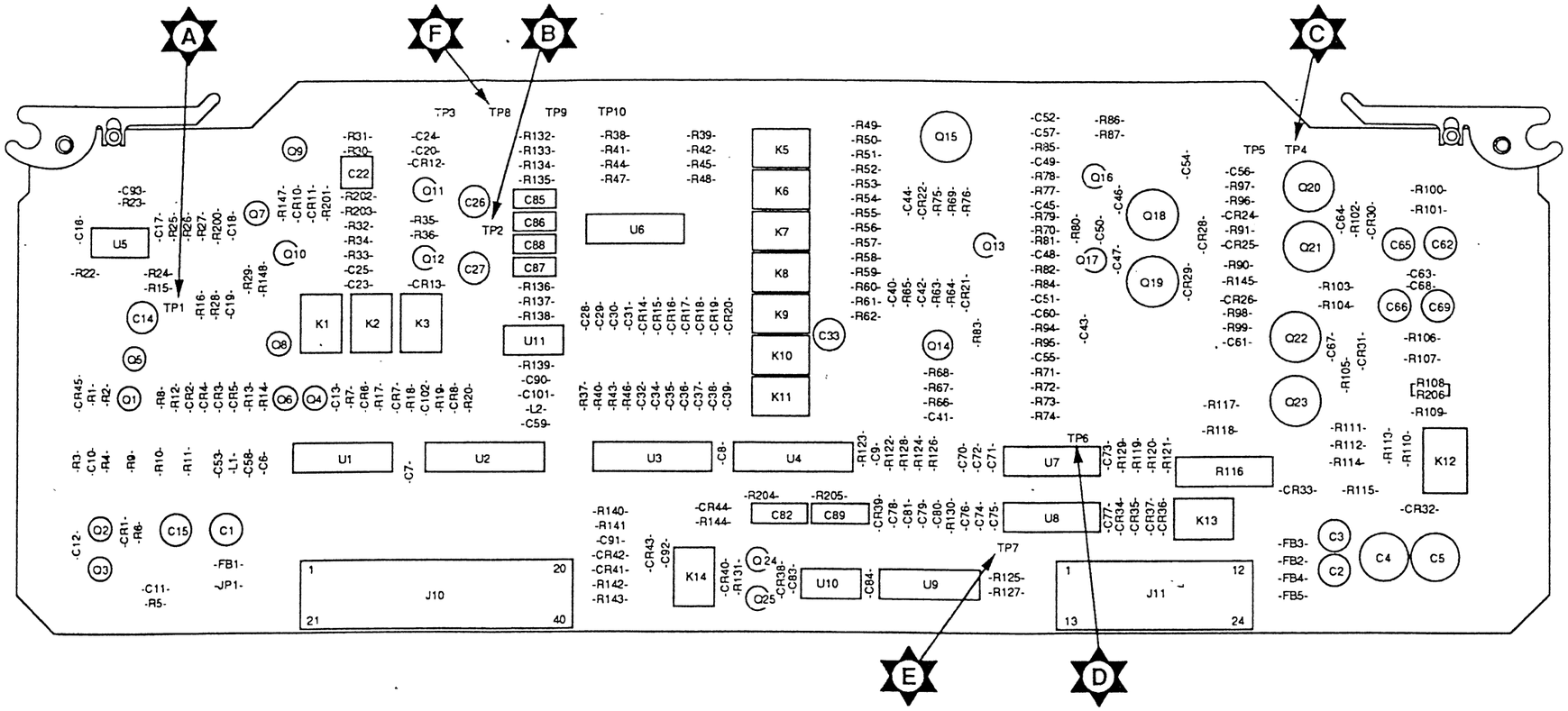

Figure 6-4. Output Board (Sheet 1 of 2).

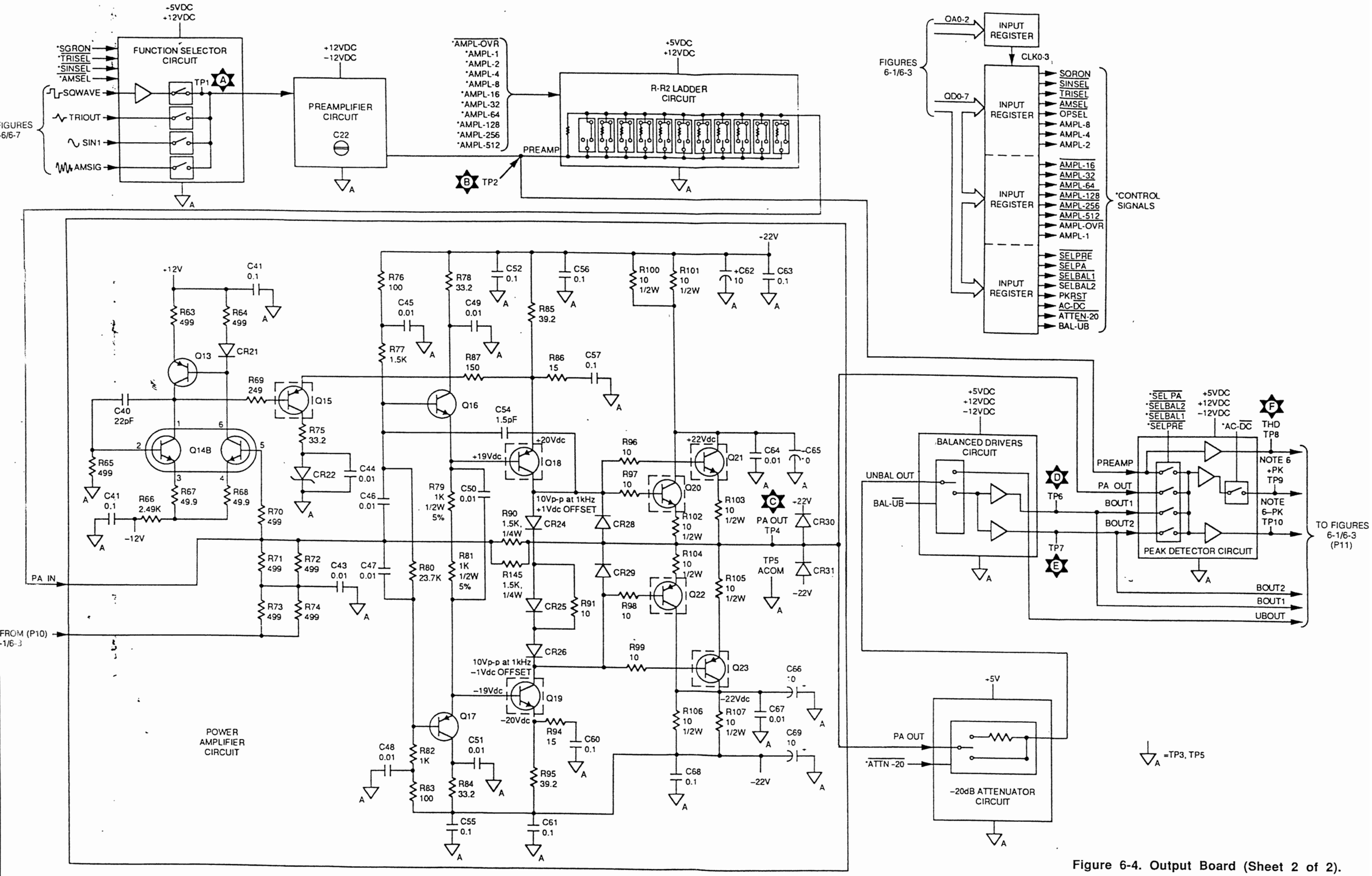

Figure 6-4. Output Board (Sheet 2 of 2).

)TES:

UNLESS OTHERWISE SPECIFIED:
RESISTANCE IS IN Ω (METAL FILM 1/8W,±1%)
CAPACITANCE IS IN µF
INDUCTANCE IS IN µH

UNLESS OTHERWISE SPECIFIED, INITIAL SETUP FOR VOLTAGES AND WAVEFORMS IS:

SET POWER TO ON.
PRESS RESET KEY.
WAIT 20 MINUTES.
PRESS CALIBRATE KEY.
VERIFY DISPLAY SHOWS AUTOCALIBRATED.

JNLESS OTHERWISE SPECIFIED, ALL VOLTAGE EADINGS AND WAVEFORMS TAKEN WITH ESPECT TO CHASSIS GROUND.

)0 VAC = A-B, C-D, E-F.

:0 VAC = E-F, B-C-D

:0 VAC = A-B, D-E

:0 VAC = B-C, D-E

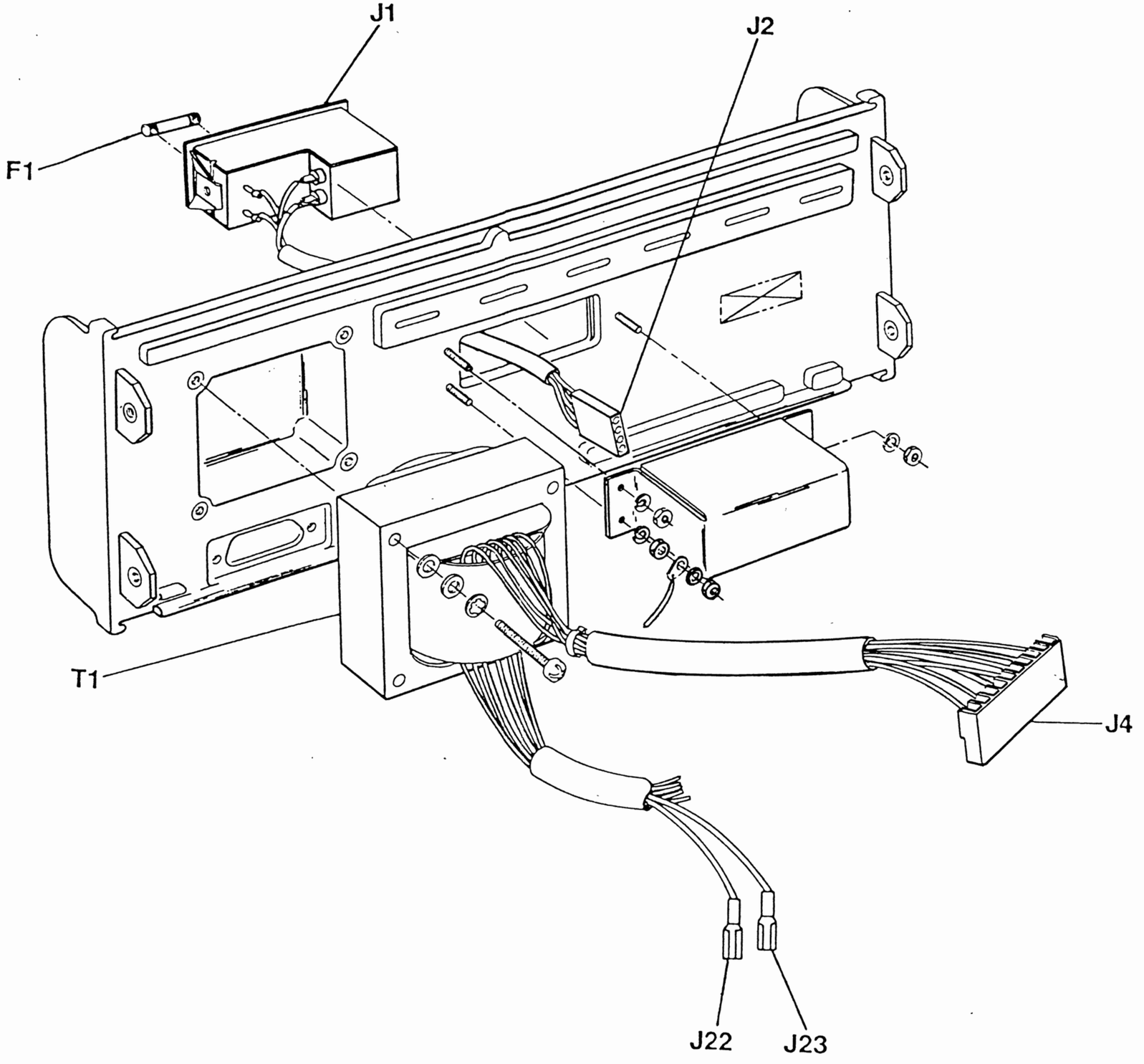

Figure 6-5. Rear Panel Assembly (Sheet 1 of 2).

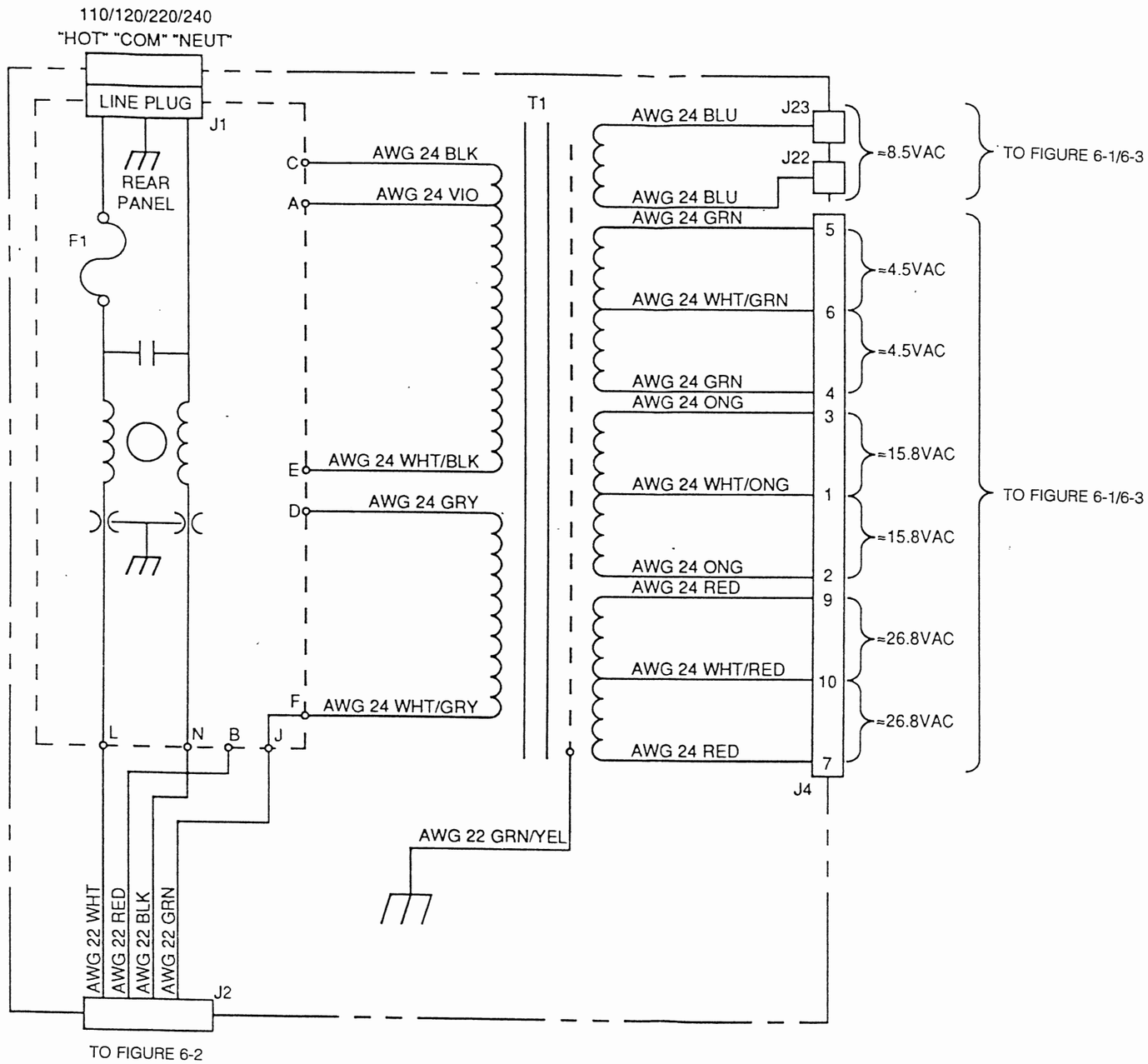

Figure 6-5. Rear Panel Assembly (Sheet 2 of 2).

NOTES:

1. UNLESS OTHERWISE SPECIFIED:
   RESISTANCE IS IN Ω (METAL FILM 1/8W,±1%)
   CAPACITANCE IS IN µF
   INDUCTANCE IS IN µH

2. UNLESS OTHERWISE SPECIFIED, INITIAL SETUP FOR VOLTAGES AND WAVEFORMS IS:

   SET POWER TO ON.
   PRESS RESET KEY.
   WAIT 20 MINUTES.
   PRESS CALIBRATE KEY.
   VERIFY DISPLAY SHOWS AUTOCALIBRATED.

3. UNLESS OTHERWISE SPECIFIED, ALL VOLTAGE READINGS AND WAVEFORMS TAKEN WITH RESPECT TO ANALOG/DIGITAL GROUND.

4. DIGITAL GROUND — TP4.

5. ANALOG GROUND — TP11.

6. NOT USED — TP5 AND TP6.

7. SIGNAL MEASURED WITH 1kHz AT 1 Vp-p SINE WAVE SIGNAL. CONNECT TO EXTERNAL FREQUENCY INPUT. SELECT EXTERNAL LOCK ON INDICATOR TO ON.

8. SIGNAL MEASURED WITH EXTERNAL LOCK ON INDICATOR TO ON WITHOUT SIGNAL CONNECTED TO EXTERNAL FREQUENCY INPUT.

9. * DENOTES CONTROL SIGNAL.

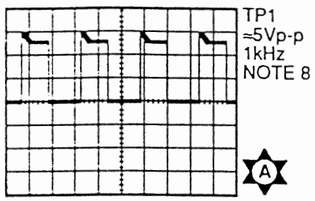

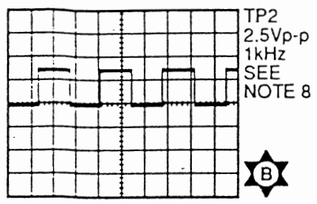

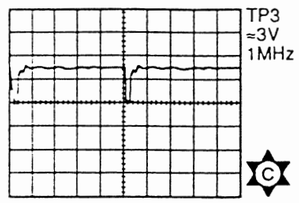

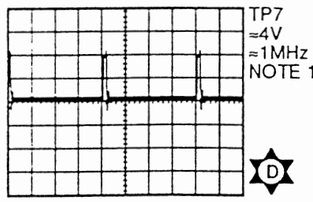

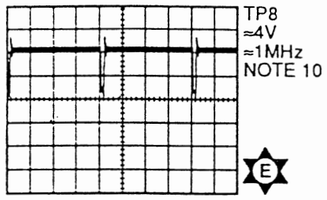

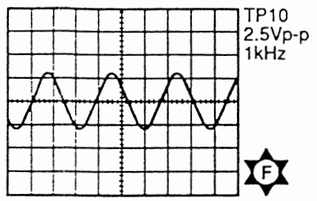

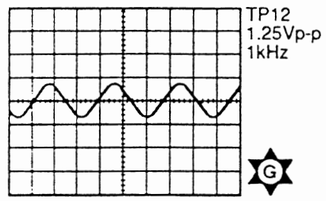

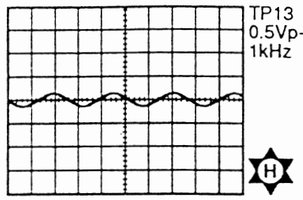

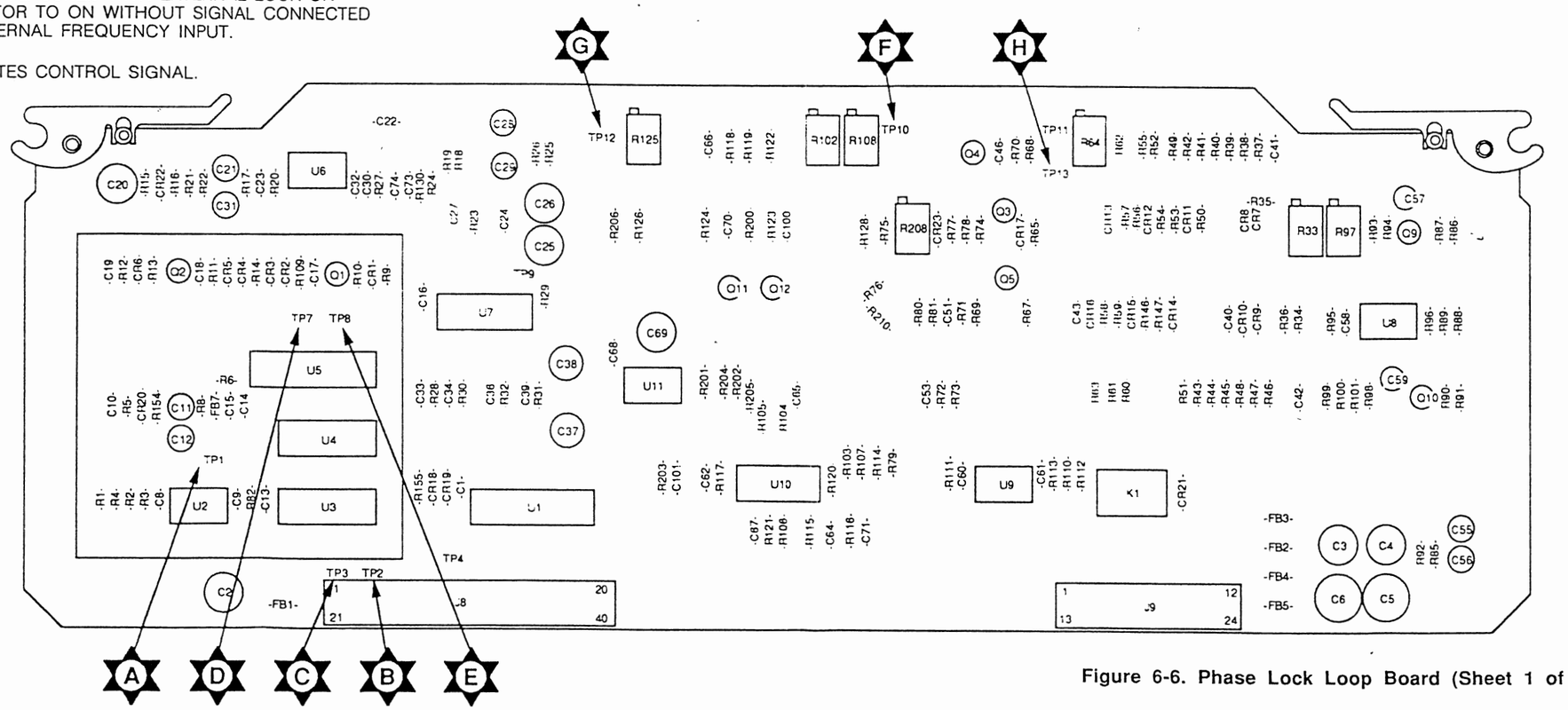

Figure 6-6. Phase Lock Loop Board (Sheet 1 of 2).

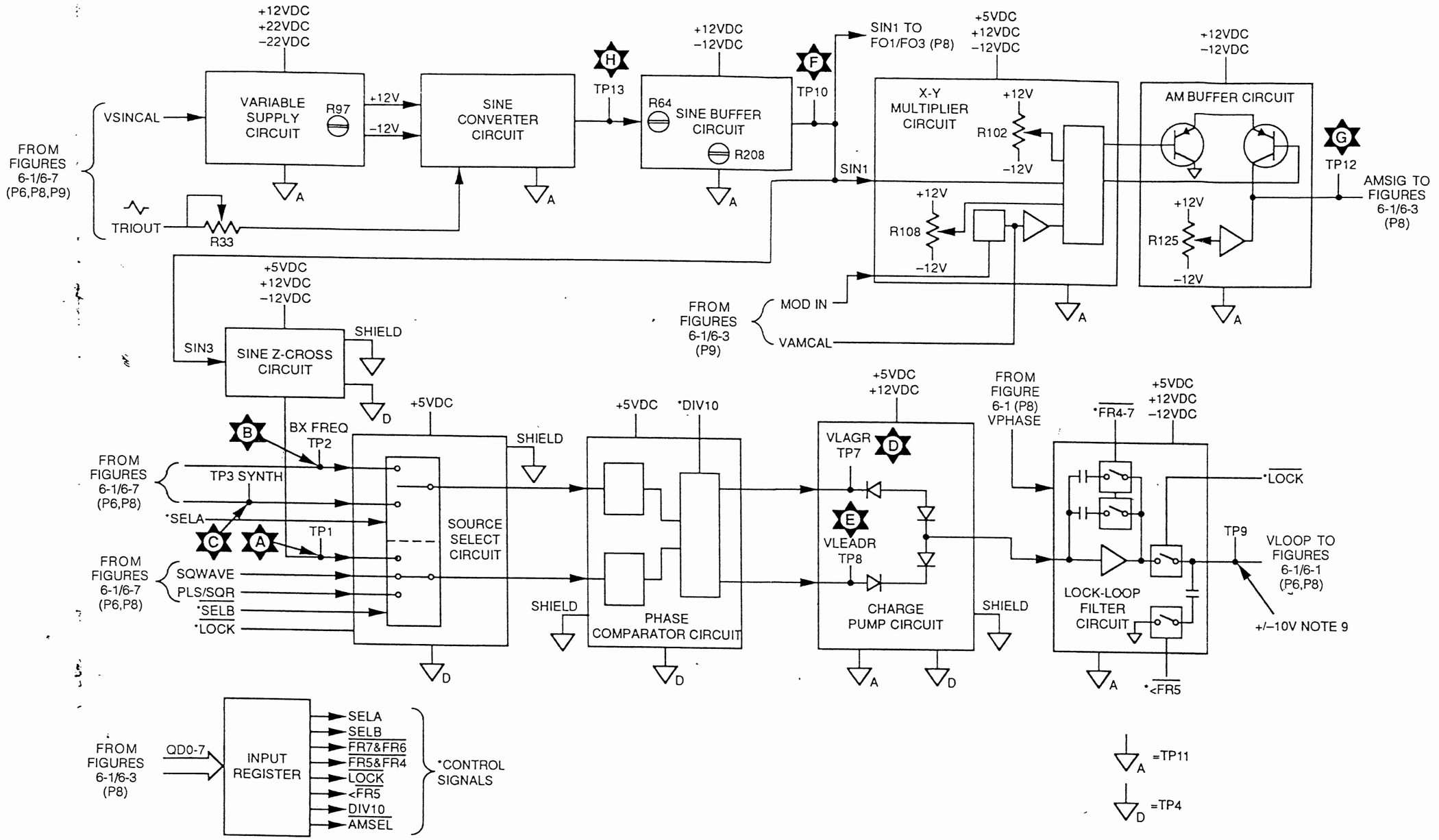

Figure 6-6. Phase Lock Loop Board (Sheet 2 of 2).

NOTES:

1. UNLESS OTHERWISE SPECIFIED:
   RESISTANCE IS IN Ω (METAL FILM 1/8W,±1%)
   CAPACITANCE IS IN μF
   INDUCTANCE IS IN μH

2. UNLESS OTHERWISE SPECIFIED, INITIAL SETUP FOR VOLTAGES AND WAVEFORMS:

   SET POWER TO ON.
   PRESS RESET KEY.
   WAIT 20 MINUTES.
   PRESS CALIBRATE KEY.
   VERIFY DISPLAY SHOWS AUTOCALIBRATED.

3. UNLESS OTHERWISE SPECIFIED, ALL VOLTAGE READINGS AND WAVEFORMS TAKEN WITH RESPECT TO ANALOG GROUND.

4. ANALOG GROUND — TP1, TP10, AND TP16.

5. * DENOTES CONTROL SIGNAL.

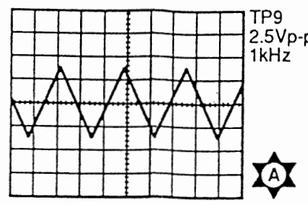

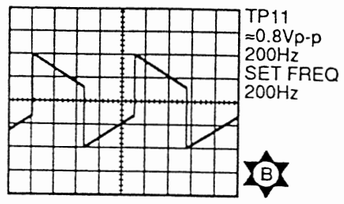

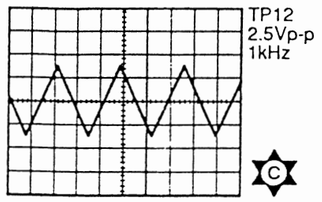

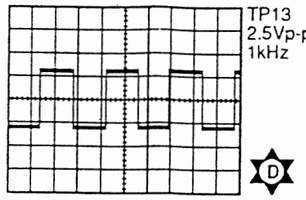

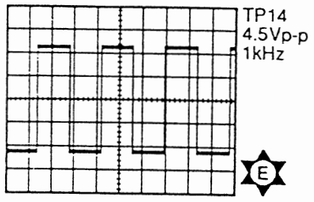

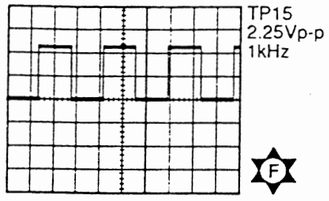

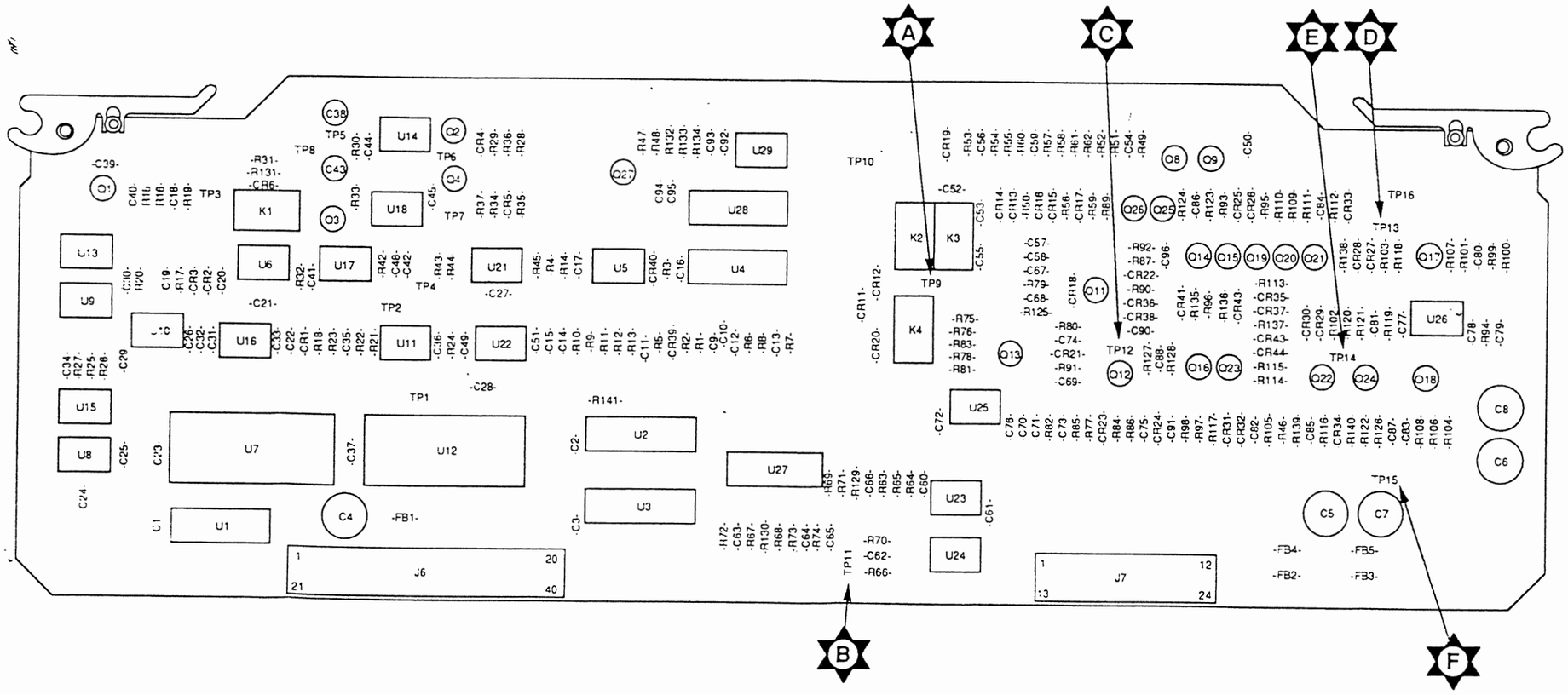

Figure 6-7. Function Generator (Sheet 1 of 2).

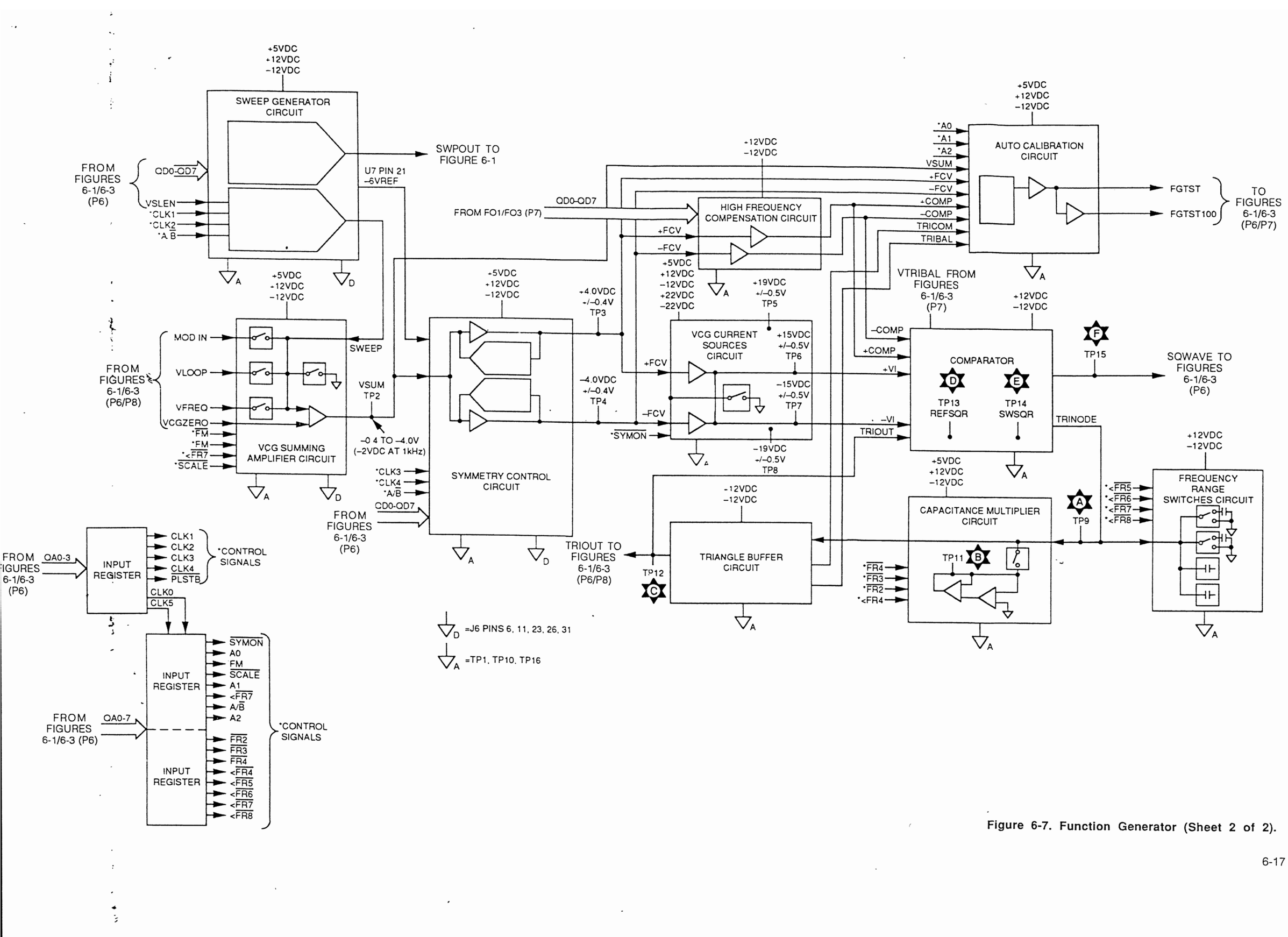

Figure 6-7. Function Generator (Sheet 2 of 2).

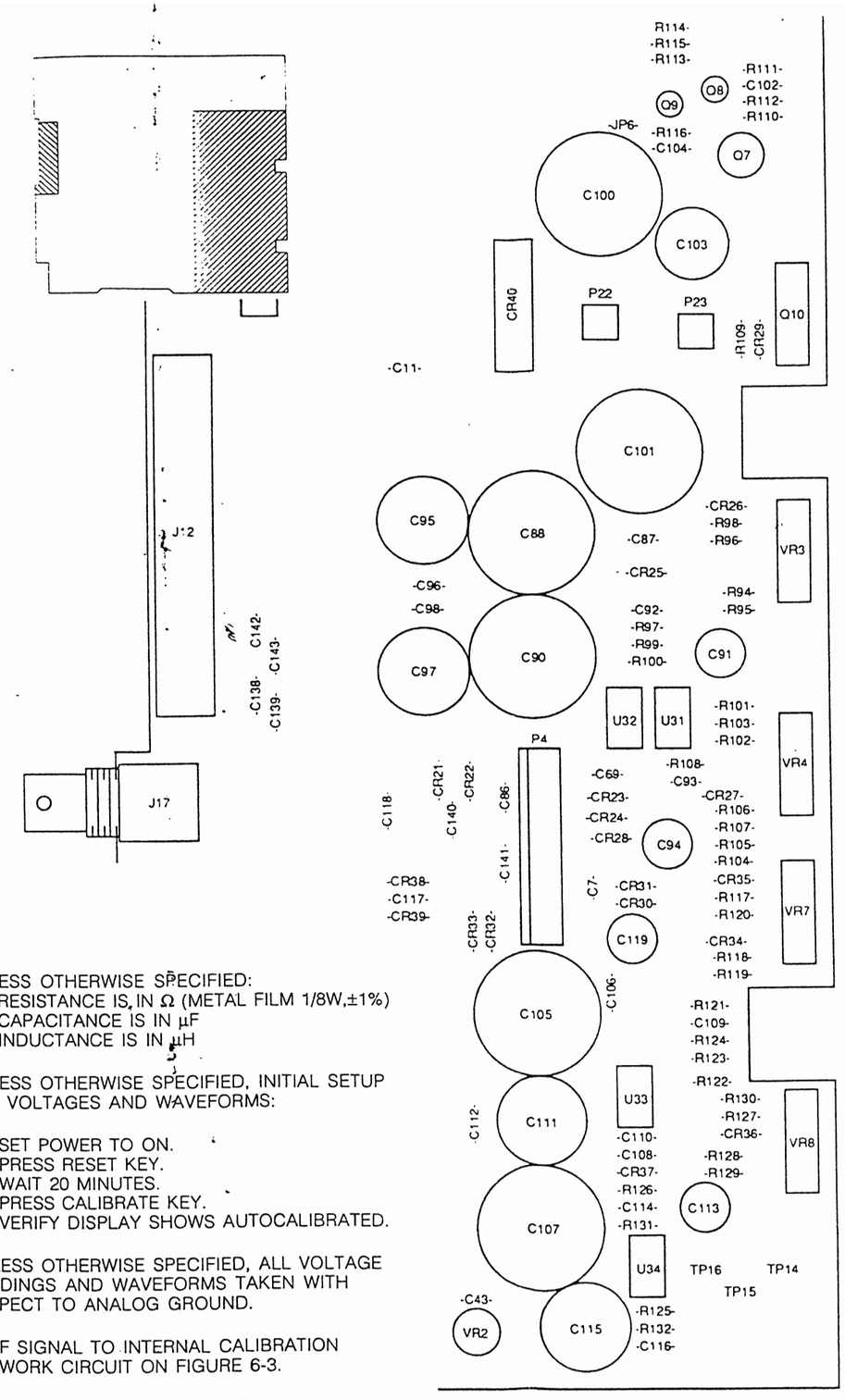

NOTES:

UNLESS OTHERWISE SPECIFIED:
RESISTANCE IS IN Ω (METAL FILM 1/8W,±1%)
CAPACITANCE IS IN µF
INDUCTANCE IS IN µH

UNLESS OTHERWISE SPECIFIED, INITIAL SETUP FOR VOLTAGES AND WAVEFORMS:

SET POWER TO ON.
PRESS RESET KEY.
WAIT 20 MINUTES.
PRESS CALIBRATE KEY.
VERIFY DISPLAY SHOWS AUTOCALIBRATED.

UNLESS OTHERWISE SPECIFIED, ALL VOLTAGE READINGS AND WAVEFORMS TAKEN WITH RESPECT TO ANALOG GROUND.

VREF SIGNAL TO INTERNAL CALIBRATION NETWORK CIRCUIT ON FIGURE 6-3.

+12REF SIGNAL FROM +12V SUPPLY IN FIGURE 6-3.,

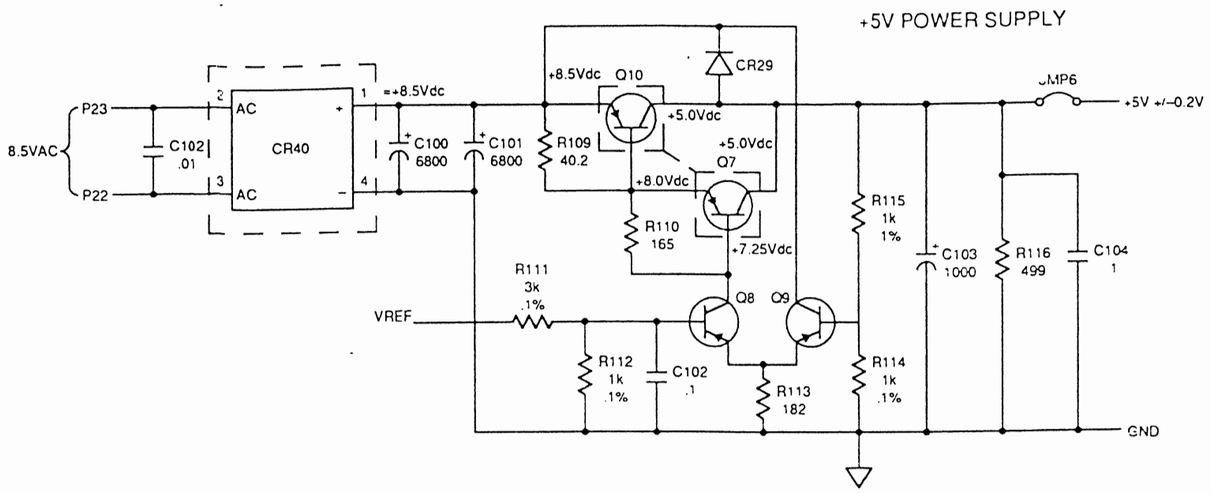

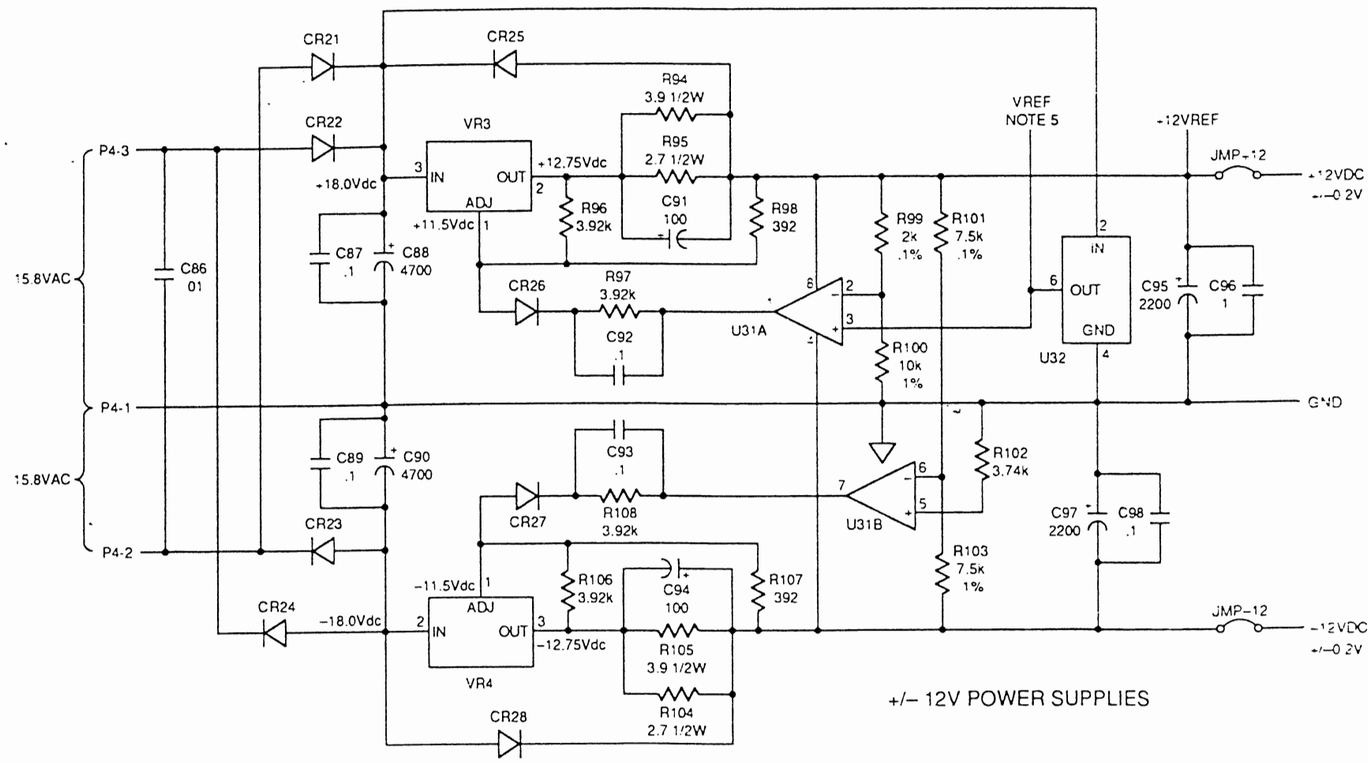

Figure 6-8. Power Supply (Sheet 1 of 2).

VFD AC FILAMENT SUPPLY

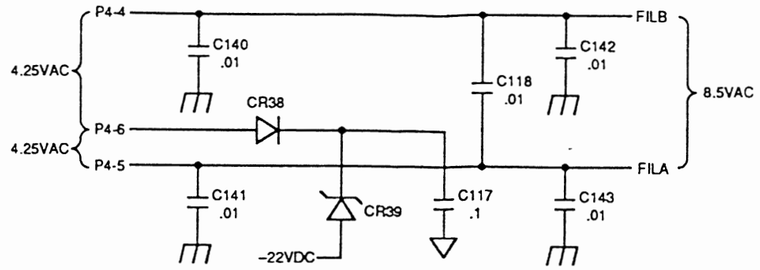

+/– 22V POWER SUPPLY

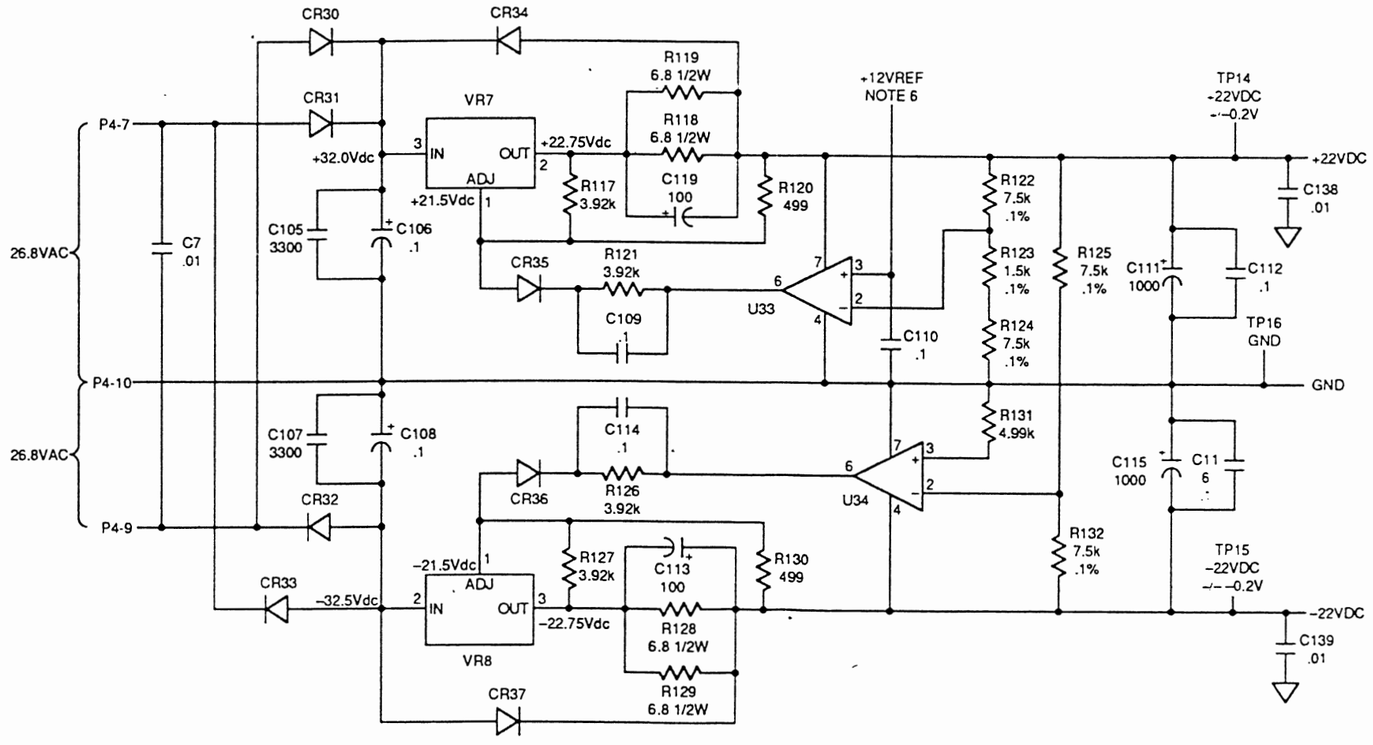

Figure 6-8. Power Supply (Sheet 2 of 2).

DOCUMENT CONTAINS PROPRIETARY INFORMATION
AND COPYRIGHT RIGHTS BELONGING TO WAVETEK AND MAY NOT
BE REPRODUCED FOR ANY REASON EXCEPT CALIBRATION,
OPERATION, AND MAINTENANCE WITHOUT WRITTEN AU-
THORIZATION

REV	ECO	BY	DATE	APP
A	ERO 89-025	MK	11/2/88	

REF (16) 2.

(10) 4 PLCS
(5) THRU TOP COVER
1 PLC
THRU BOTTEM
COVER

(1.)

3 PLCS THRU (3) (26)
REAR PANEL AND
INTO TRANSISTOR (3) (27)
SUPPORT PLATE

LL THRU REAR PANEL (28)
CONNECTOR, 2 PLCS

(24)

A

A

(20)

(2)

2.

(3)

(4)

(5) (2) NOTE ORIENTATION

(6)

(5) REF. NOTE ORIENTATION

(7)

(8)

2.

CS EACH (3) (19) 2.
OF BOTH
PANELS,
LCS TOTAL

(18)

REF. HEMMED EDGE IS
LOCATED TOWARD FRONT ON
ITEM 5, 2 PLCS

(17)

(3) (16) 2.

REF (13)

(9) (FRONT PANEL
ASSEMBLY)

(30) (5)

(2) (15)

REF (27)

REF (11)

(13) REF

THRU MOTHER BD. (3) (21)
AND INTO ITEM NO. 3,
3 PLCS.

(14)

(4) (13)

(12) REF

(27) REF

(11) REF

(10) REF

(2) (12)

(27) (4)

(4) (11)

1. (29)

(23)

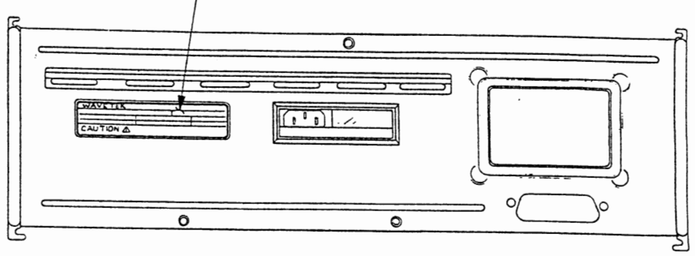

VIEW A-A

2. DO NOT USE LOCTITE (OR EQUIV) ON THESE SCREWS.

1. 3/4 A SLOW BLOW FUSE IS INSTALLED IN REAR PANEL FOR 100V/120V APPLICATION.
3/8A SLOW BLOW FUSE IS SUPPLIED WITH UNIT FOR 220V/240V APPLICATION.

NOTES: UNLESS OTHERWISE SPECIFIED. SEE SEPARATE PARTS LIST.

NOTE: UNLESS OTHERWISE SPECIFIED

REMOVE ALL BURRS AND BREAK SHARP EDGES	DRAWN CHERMACK	DATE 2-5-88	WAVETEK SAN DIEGO, CALIFORNIA
MATERIAL	CHECKED M. Bagley	11-9-88	TITLE ASSEMBLY, CHASSIS
	PROJ. ENGR.	11-4-88	
FINISH WAVETEK PROCESS	RELEASE APPROV.	11/4/88	
DO NOT SCALE DRAWING	UNLESS OTHERWISE SPECIFIED DIMENSIONS ARE IN INCHES TOLERANCES ARE: FRACTIONS ± DECIMALS ± XX ± XXX ± ANGLES ±		SIZE D · FSCM NO. 23338 · DWG. NO. 0002-00-05601 · REV A SCALE NONE · MODEL 288 · SHEET 1 OF 1

0002-00-0510 | A

THIS DOCUMENT CONTAINS PROPRIETARY INFORMATION AND DESIGN RIGHTS BELONGING TO WAVETEK AND MAY NOT BE REPRODUCED FOR ANY REASON EXCEPT CALIBRATION, OPERATION, AND MAINTENANCE WITHOUT WRITTEN AUTHORIZATION.

REV	ECO	BY	DATE	APP
A	ERO 89-025	MK	11-2-88	

"HOT" "COM" "NEUT"

F1 3/4 ASB

REAR PANEL

J1 CORCOM 6J4

T1

1A3A1

AWG 24 BLK
AWG 24 VIO
AWG 24 WHT/BLK
AWG 24 GRY
AWG 24 WHT/GRY

L N B J

AWG 22 WHT
AWG 22 RED
AWG 22 BLK
AWG 22 GRN
AWG 22 GRN/YEL

J2 P2 REAR PANEL

AWG 24 BLU
AWG 24 BLU
AWG 24 GRN
AWG 24 WHT/GRN
AWG 24 GRN
AWG 24 ORG
AWG 24 WHT/ORG
AWG 24 ORG
AWG 24 RED
AWG 24 WHT/RED
AWG 24 RED

REAR PANEL ASSEMBLY (1101-00-3007)

J4 P4 J22 P22 J23 P23

+/- 22V SUPPLY INPUT
+/- 12V SUPPLY INPUT
VFD FILAMENT SUPPLY
+5V SUPPLY INPUT

MOTHER BOARD PCA

GPIB CONNECTOR

J5

DIO1 DIO2 DIO3 DIO4 EOI DAV NRFD NDAC IFC SRQ ATN DIO5 DIO6 DIO7 DIO8 REN DGND DGND DGND DGND DGND DGND DGND DGND

REAR PANEL

AUXILIARY BOARD

J30 P30

SOMAVE SYNTH DGND OA0 OA2 DGND QD6 QD4 QD2 QD0 DGND +5PV AGND AGND AGND N/C N/C N/C MOD_IN BXFREQ PLS/SQR DGND OXSTB QA1 QA3 QD7 QD5 QD3 QD1 DGND +5PV AGND OBSIG AGND SHCLK N/C N/C N/C

J31 P31

OXDVM AGND SOMAVE RUN AGND -12PV AGND +12PV AGND +22PV AGND -22PV OXDVM AGND SOMAVE OSCIN AGND -12PV AGND +12PV AGND +22PV AGND -22PV

FUNCTION GENERATOR PCA (1100-00-3004)

J6 P6

SOMAVE SYNTH PLSTB QA0 QA2 DGND QD6 QD4 QD2 QD0 DGND +5PV AGND OBSIG AGND TRIOUT AGND VLOOP AGND MOD_IN BXFREQ PLS/SQR DGND F6STB QA1 DGND QD7 QD5 QD3 QD1 DGND +5PV AGND OBSIG AGND VCOZERO VFREQ F6TST VSLEN AGND

J7 P7

SWPOUT RAG-4 VIRIBAL AGND AGND -12PV AGND +12PV AGND +22PV AGND -22PV FGTST100 AGND SOMAVE RUN AGND -12PV AGND +12PV AGND +22PV AGND -22PV

PHASE LOCK LOOP PCA (1100-00-3003)

J8 P8

SOMAVE SYNTH DGND QA0 QA2 DGND QD6 QD4 QD2 QD0 DGND +5PV AGND OBSIG AGND TRIOUT AGND AMSIG AGND SIN1 BXFREQ PLS/SQR DGND PLSTB QA1 DGND QD7 QD5 QD3 QD1 DGND +5PV AGND OPTSIG AGND TRIOUT AGND VLOOP AGND VPHASE

J9 P9

MOD_IN AGND AGND AGND AGND -12PV AGND +12PV AGND +22PV AGND -22PV AGND AGND AGND VAMCAL VSINCAL AGND -12PV AGND +12PV AGND +22PV AGND -22PV

OUTPUT BOARD PCA (1100-00-3002)

J10 P10

SOMAVE SYNTH DGND QA0 QA2 DGND QD6 QD4 QD2 QD0 DGND +5PV AGND AGND AGND CLK0 TRIOUT AGND AMSIG AGND VOFST BXFREQ PLS/SQR DGND F6STB QA1 DGND QD7 QD5 QD3 QD1 DGND +5PV AGND OPTSIG AGND TRIOUT AGND AMSIG AGND SIN1

J11 P11

UBOUT AGND BOUT1 BOUT2 AGND -12PV AGND +12PV AGND +22PV AGND -22PV THD AGND -PK +PK AGND -12PV AGND +12PV AGND +22PV AGND -22PV

MOTHER BOARD PCA (1100-00-3198)

J3 P3

AWG 22 WHT
AWG 22 RED
AWG 22 BLK
AWG 22 GRN

ON
OFF
1A1SW1
POWER

J12 P12

GND FPS QA0 QA1 QD6 QD7 QD4 QD5 QD2 QD3 QD0 QD1 GND GND GND P10 P11 P12 P13 P14 P15 P16 P17 GND GND +5PV +5PV WRST CHA GND CHB FIL_A FIL_B GND GND +22PV +22PV GND GND -22PV -22PV

DISPLAY/KEYBOARD PCA (1100-00-3001)

FRONT PANEL ASSEMBLY (1101-00-3199)

AGND P13 J13

AWG 22 BLK

J14 "CT"

J15 SYNC-OUT SYNC OUT
J16 DGND XFREQ IN EXT FREQ IN
J17 GND MOD_IN MOD/VCF IN
J18 GND SWPOUT SWEEP OUT
J19 RAG4 UBOUT ATTN UNBAL OUT
J20 GND BOUT1 ATTN (+) BAL OUT
J21 BOUT2 ATTN (-) BAL OUT

NOTE: UNLESS OTHERWISE SPECIFIED

REMOVE ALL BURRS AND BREAK SHARP EDGES	DRAWN M.KINGSLEY	DATE 9-18-86	WAVETEK SAN DIEGO, CALIFORNIA
MATERIAL	CHECKED	11-4-87	TITLE: SCHEMATIC INSTRUMENT
	PROJ. ENGR	11-4-87	
FINISH WAVETEK PROCESS		11/4/88	
DO NOT SCALE DRAWING	UNLESS OTHERWISE SPECIFIED DIMENSIONS ARE IN INCHES TOLERANCES ARE: FRACTIONS DECIMALS ANGLES ± XX ± XXX ± ±		SIZE D · FSCM NO. 23338 · DWG. NO. 0004-00-0561 · REV A · SCALE NONE · MODEL 288 · SHEET 1 OF 1

ENT CONTAINS PROPRIETARY INFORMATION
SIGHTS BELONGING TO WAVETEK AND MAY NOT
ED FOR ANY REASON EXCEPT CALIBRATION,
AND MAINTENANCE WITHOUT WRITTEN AU-

REV	ECO	BY	DATE	APP
A	ERO 9896	MG	3-26-98	

FRONT PANEL BOARD CONNECTOR

J12

GND	1
QA0	2
QD6	3
QD4	4
QD2	5
QD0	6
GND	7
P10	8
P12	9
P14	10
P16	11
GND	12
+5PV	13
GND	14
GND	15
FIL_A	16
GND	17
+22PV	18
GND	19
-22PV	20
FPSTB	21
QA1	22
QD7	23
QD5	24
QD3	25
QD1	26
GND	27
P11	28
P13	29
P15	30
P17	31
GND	32
+5PV	33
RKA	34
RKB	35
FIL_B	36
GND	37
+22PV	38
GND	39
-22PV	40

POWER SUPPLY UNREGULATED AC INPUT

P4

1, 2, 3	+/- 12V SUPPLY UNREGULATED VOLTAGE
4, 5, 6	VFD FILAMENT SUPPLY
7, 8, 9, 10	+/- 22V SUPPLY UNREGULATED VOLTAGE

P23, P22 — +5V UNREGULATED SUPPLY

OUTPUT BOARD CONNECTORS

P10

SQWAVE	1
SYNTH	2
DGND	3
QA0	4
QA2	5
DGND	6
QD6	7
QD4	8
QD2	9
QD0	10
DGND	11
+5PV	12
AGND	13
AGND	14
CLK0	15
TRIOUT	16
AGND	17
AMSIG	18
AGND	19
VOFST	20
BXFREQ	21
PLS/SQR	22
DGND	23
OBSTB	24
QA1	25
DGND	26
QD7	27
QD5	28
QD3	29
QD1	30
DGND	31
+5PV	32
AGND	33
OPTSIG	34
AGND	35
TRIOUT	36
AGND	37
AMSIG	38
AGND	39
SIN1	40

P11

UBOUT	1
AGND	2
BOUT1	3
BOUT2	4
AGND	5
-12PV	6
AGND	7
+12PV	8
AGND	9
+22PV	10
AGND	11
-22PV	12
THD	13
AGND	14
-PK	15
+PK	16
AGND	17
-12PV	18
AGND	19
+12PV	20
AGND	21
+22PV	22
AGND	23
-22PV	24

PHASE LOCK LOOP BOARD CONNECTORS

P8

SQWAVE	1
SYNTH	2
DGND	3
QA0	4
QA2	5
DGND	6
QD6	7
QD4	8
QD2	9
QD0	10
DGND	11
+5PV	12
AGND	13
OBSIG	14
AGND	15
TRIOUT	16
AGND	17
AMSIG	18
AGND	19
SIN1	20
BXFREQ	21
PLS/SQR	22
DGND	23
PLSTB	24
QA1	25
DGND	26
QD7	27
QD5	28
QD3	29
QD1	30
DGND	31
+5PV	32
AGND	33
OPTSIG	34
AGND	35
TRIOUT	36
AGND	37
VLOOP	38
AGND	39
VPHASE	40

P9

MOD_IN	1
AGND	2
AGND	3
AGND	4
AGND	5
-12PV	6
AGND	7
+12PV	8
AGND	9
+22PV	10
AGND	11
-22PV	12
AGND	13
AGND	14
VAMCAL	15
VSINCAL	16
AGND	17
-12PV	18
AGND	19
+12PV	20
AGND	21
+22PV	22
AGND	23
-22PV	24

FUNCTION GENERATOR BOARD CONNECTORS

P6

SQWAVE	1
SYNTH	2
PLSTB	3
QA0	4
QA2	5
DGND	6
QD6	7
QD4	8
QD2	9
QD0	10
DGND	11
+5PV	12
AGND	13
OBSIG	14
AGND	15
TRIOUT	16
AGND	17
VLOOP	18
AGND	19
MOD_IN	20
BXFREQ	21
PLS/SQR	22
DGND	23
OBSTB	24
QA1	25
DGND	26
QD7	27
QD5	28
QD3	29
QD1	30
DGND	31
+5PV	32
AGND	33
OBSIG	34
AGND	35
VCGZERO	36
VFREQ	37
FGTST	38
VSLEN	39
AGND	40

P7

SWPOUT	1
RAG-4	2
VIRIBAL	3
AGND	4
AGND	5
-12PV	6
AGND	7
+12PV	8
AGND	9
+22PV	10
AGND	11
-22PV	12
FGTST100	13
AGND	14
SQWAVE	15
RUN	16
AGND	17
-12PV	18
AGND	19
+12PV	20
AGND	21
+22PV	22
AGND	23
-22PV	24

AUXILLARY BOARD CONNECTORS

P30

SQWAVE	1
SYNTH	2
DGND	3
QA0	4
QA2	5
DGND	6
QD6	7
QD4	8
QD2	9
QD0	10
DGND	11
+5PV	12
AGND	13
AGND	14
AGND	15
N/C	16
N/C	17
N/C	18
N/C	19
MOD_IN	20
BXFREQ	21
PLS/SQR	22
DGND	23
OXSTB	24
QA1	25
QA3	26
QD7	27
QD5	28
QD3	29
QD0	30
DGND	31
+5PV	32
AGND	33
OBSIG	34
AGND	35
SHCLK	36
N/C	37
N/C	38
N/C	39
N/C	40

P31

OXDVM	1
AGND	2
SQWAVE	3
RUN	4
AGND	5
-12PV	6
AGND	7
+12PV	8
AGND	9
+22PV	10
AGND	11
-22PV	12
OXDVM	13
AGND	14
SQWAVE	15
OSCIN	16
AGND	17
-12PV	18
AGND	19
+12PV	20
AGND	21
+22PV	22
AGND	23
-22PV	24

MODEL 289 ONLY

4. ⏚ CHASSIS GROUND SYMBOL.
3. ⏚ GROUND SYMBOL.
2. ALL CAPACITORS ARE IN MICROFARADS.
1. ALL RESISTORS ARE IN OHMS, 1/8W, 1%, MF.

E: UNLESS OTHERWISE SPECIFIED

REFERENCE DESIGNATORS LAST USED	REFERENCE DESIGNATORS NOT USED
R152, C147, CR43, U34, TP17, Q12, VR8, . SW1, BT1, Y1, FB3, JMP12	R50, R134-R137, R139-R142, R144, R152 C1, C2, C30, C31, C63, C69, C71, C78, C122, C123, C125, C137, CR40-CR42, U25, U27, TP3, TP4, TP12, TP13, VR5, VR6

REMOVE ALL BURRS AND BREAK SHARP EDGES
MATERIAL
FINISH WAVETEK PROCESS
DO NOT SCALE DRAWING

DRAWN M.KINGSLEY 3-18-98
CHECKED MG 3 22 98
PROJ. ENGR. 3 22 98
RELEASE APPROV. 3 25 98

UNLESS OTHERWISE SPECIFIED DIMENSIONS ARE IN INCHES TOLERANCES ARE:
FRACTIONS ± DECIMALS XX ± XXX ± ANGLES ±

WAVETEK SAN DIEGO, CALIFORNIA

TITLE: MOTHERBOARD SCHEMATIC

SIZE	FSCM NO.	DWG. NO.	REV
D	23338	0103-00-3000	A

SCALE NONE MODEL 1288 SHEET 1 OF 10

THIS DOCUMENT CONTAINS PROPRIETARY INFORMATION AND DESIGN RIGHTS BELONGING TO WAVETEK AND MAY NOT BE REPRODUCED FOR ANY REASON EXCEPT CALIBRATION, OPERATION, AND MAINTENANCE WITHOUT WRITTEN AUTHORIZATION.

REV	ECO	BY	DATE	APP

REFERENCE DESIGNATORS	PART DESCRIPTION	ORIG-MFGR-PART-NO	MFGR	WAVETEK NO.	QTY/PT
NONE	ASSY DRWG, CHASSIS-288	0002-00-0561	WVTK	0002-00-0561	1
NONE	INSTRUMENT SCHEMATIC-288	0004-00-0561	WVTK	0004-00-0561	1
NONE	CALIBRATION SPEC/CALIBRATION PROCEDURE	0005-00-0561	WVTK	0005-00-0561	1
NONE	PRODUCTION ACCEPTANCE TEST SPECIFICATION	0007-00-0561	WVTK	0007-00-0561	1
NONE	288 PRODUCT STRUCTURE TREE	0010-00-0561	WVTK	0010-00-0561	1
7	ASSY, OUTPUT BOARD	1100-00-3002	WVTK	1100-00-3002	1
6	ASSY, PHASE LOCK BD	1100-00-3003	WVTK	1100-00-3003	1
4	ASSY, FUNCTION GENERATOR BD	1100-00-3004	WVTK	1100-00-3004	1
18	PCA, MOTHER BD-288	1100-00-3198	WVTK	1100-00-3198	1
20	ASSY, REAR PANEL	1101-00-3007	WVTK	1101-00-3007	1
9	ASY, FRONT PANEL-288	1101-00-3199	WVTK	1101-00-3199	1
8	ASSY, SIDE PLATE, RIGHT	1201-00-3012	WVTK	1201-00-3012	1
17	ASSY, SIDE PLATE, LEFT	1201-00-3013	WVTK	1201-00-3013	1
23	I. D. LABEL	801-9090	WVTK	1400-00-9090	1

WAVETEK PARTS LIST | TITLE: MODEL 288 | ASSEMBLY NO. 1000-00-0561 | REV A

REFERENCE DESIGNATORS	PART DESCRIPTION	ORIG-MFGR-PART-NO	MFGR	WAVETEK NO.	QTY/PT
24	LABEL, CAUTION	859-1400	WVTK	1400-01-1400	1
5	SHIELD, INNER	1400-02-3323	WVTK	1400-02-3323	2
2	SHIELD, TOP	1400-02-3353	WVTK	1400-02-3353	1
1	COVER, TOP	1400-02-3532	WVTK	1400-02-3532	1
3	SHIELD, REAR	1400-02-4183	WVTK	1400-02-4183	1
14	COVER, BOTTOM	1400-02-4322	WVTK	1400-02-4322	1
28	HARDWARE KIT, GPIB CONN	554808-1	AMP	2100-07-0024	1
29	FUSE, 3/8A, 250V, S-B	313.375	LITFU	2400-05-0009	1
156	FOOT	10603-026	SCHRF	2800-08-0020	2
12	FOOT WITH TIP-UP	10603-025	SCHRF	2800-08-0021	2
30	NUT, HEX, 1/2-28	1-329631-2	AMP	2800-16-0025	5
11	NUT, HEX, 8-32, 3/32 THK, .25 FLT, MINI, SS	2800-16-8106	CMCRL	2800-16-8106	4
27	LOCKWASHER, #8 SPLIT RING, SS	#8SRLW	CMRCL	2800-42-8000	7
16	SCREW PLPS PAN M/S 18-8 S/S 6-32X3/8	MS 51957-28	CMRCL	2800-48-6106	3

WAVETEK PARTS LIST | TITLE: MODEL 288 | ASSEMBLY NO. 1000-00-0561 | REV A

REFERENCE DESIGNATORS	PART DESCRIPTION	ORIG-MFGR-PART-NO	MFGR	WAVETEK NO.	QTY/PT
26	SCREW PLPS PAN M/S 18-8 S/S 8-32X1/2	SCREW PH 8-32X1/2	CMRCL	2800-48-8108	3
19	SCREW, 8-32X7/16, 100DEG FH, PHLPS, SS	2800-54-8107	CMCRL	2800-54-8107	8
13	SCREW, 8-32 X 1/2, 100 DEG, FH, PHLPS, SS	2800-54-8108	CMCRL	2800-54-8108	4
10	SCREW, 6-32/3/8, FH, PHLPS, 100 DEG, SS, NYLOK	2800-60-6106	CMRCL	2800-60-6106	1
NONE	PWR CORD, SHIELDED	6001-80-0009	WVTK	6001-80-0009	1

WAVETEK PARTS LIST | TITLE: MODEL 288 | ASSEMBLY NO. 1000-00-0561 | REV A

NOTE: UNLESS OTHERWISE SPECIFIED

REMOVE ALL BURRS AND BREAK SHARP EDGES	DRAWN	DATE	WAVETEK SAN DIEGO, CALIFORNIA
MATERIAL	CHECKED		TITLE: PARTS LIST INSTRUMENT
	PROJ. ENGR.		
	RELEASE APPROV.		
FINISH WAVETEK PROCESS	UNLESS OTHERWISE SPECIFIED DIMENSIONS ARE IN INCHES TOLERANCES ARE: FRACTIONS ± DECIMALS .XX ± .XXX ± ANGLES ±		SIZE D; FSCM NO. 23338; DWG. NO. 1000-00-0561; REV A; SCALE; MODEL 288; SHEET 1 OF 1
DO NOT SCALE DRAWING			

DOCUMENT CONTAINS PROPRIETARY INFORMATION
DESIGN RIGHTS BELONGING TO WAVETEK AND MAY NOT
REPRODUCED FOR ANY REASON EXCEPT CALIBRATION,
RATION, AND MAINTENANCE WITHOUT WRITTEN AU-
RIZATION.

REV	ECO	BY	DATE	APP

MICRO PROCESSOR SECTION

* PART IN SOCKET

NOTE: UNLESS OTHERWISE SPECIFIED

REMOVE ALL BURRS AND BREAK SHARP EDGES	DRAWN M.KINGSLEY	DATE 5-19-88	WAVETEK SAN DIEGO, CALIFORNIA
MATERIAL	CHECKED		TITLE: MOTHERBOARD SCHEMATIC
	PROJ. ENGR.		
FINISH WAVETEK PROCESS	RELEASE APPROV.		
DO NOT SCALE DRAWING	UNLESS OTHERWISE SPECIFIED DIMENSIONS ARE IN INCHES TOLERANCES ARE: FRACTIONS ± DECIMALS .XX ± .XXX ± ANGLES ±		SIZE D · FSCM NO. 23338 · DWG. NO. 0103-00-3000 · REV A · SCALE NONE · MODEL 1288 · SHEET 3 OF 10

THIS DOCUMENT CONTAINS PROPRIETARY INFORMATION AND DESIGN RIGHTS BELONGING TO WAVETEK AND MAY NOT BE REPRODUCED FOR ANY REASON EXCEPT CALIBRATION, OPERATION, AND MAINTENANCE WITHOUT WRITTEN AUTHORIZATION.

REV	ECO	BY	DATE	APP

DVM
INTERNAL CALIBRATION NETWORK

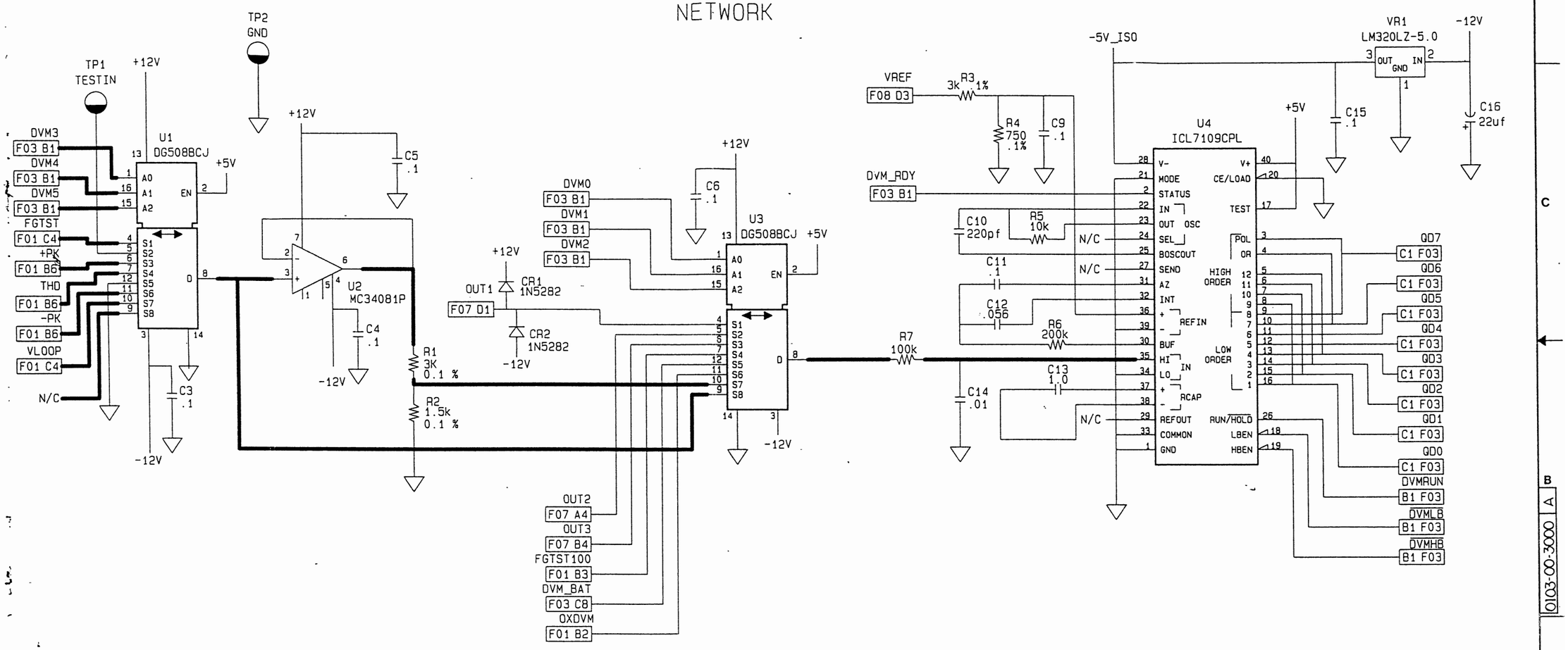

NOTE: UNLESS OTHERWISE SPECIFIED

REMOVE ALL BURRS AND BREAK SHARP EDGES	DRAWN M.KINGSLEY	DATE 3-19-98	WAVETEK SAN DIEGO, CALIFORNIA
MATERIAL	CHECKED		TITLE: MOTHERBOARD SCHEMATIC
	PROJ. ENGR.		
FINISH WAVETEK PROCESS	RELEASE APPROV.		
DO NOT SCALE DRAWING	UNLESS OTHERWISE SPECIFIED DIMENSIONS ARE IN INCHES TOLERANCES ARE: FRACTIONS ± DECIMALS .XX ± .XXX ± ANGLES ±		SIZE D · FSCM NO. 23338 · DWG. NO. 0103-00-3000 · REV A · SCALE NONE · MODEL 1288 · SHEET 2 OF 10

0103-00-3000 A

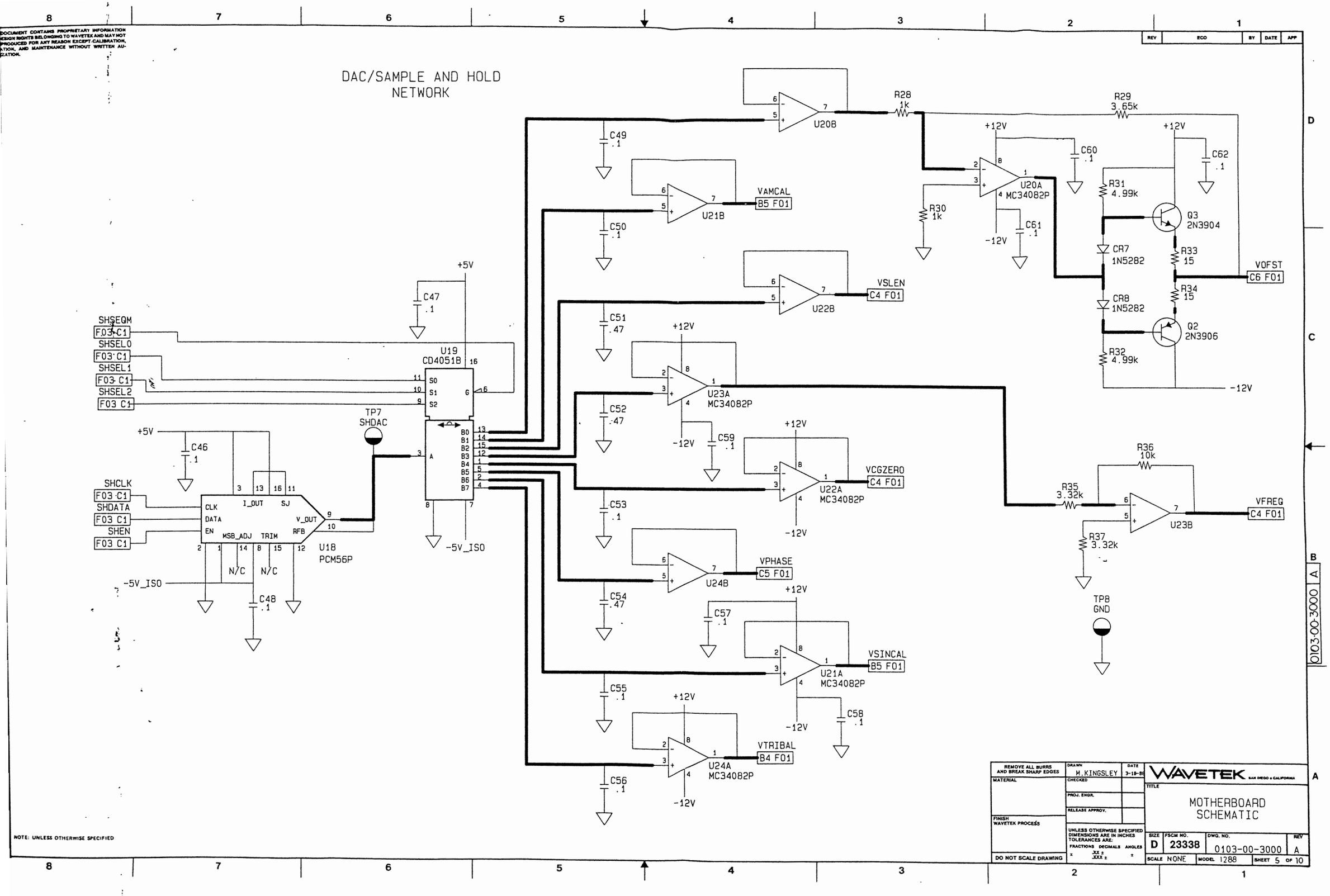
DAC/SAMPLE AND HOLD NETWORK
U20B
U20A MC34082P
U21B
U22B
U23A MC34082P
U22A MC34082P
U24B
U21A MC34082P
U24A MC34082P
U23B
U19 CD4051B
U18 PCM56P
VAMCAL B5 F01
VSLEN C4 F01
VCGZERO C4 F01
VPHASE C5 F01
VSINCAL B5 F01
VTRIBAL B4 F01
VOFST C6 F01
VFREG C4 F01
SHSEQM F03 C1
SHSEL0 F03 C1
SHSEL1 F03 C1
SHSEL2 F03 C1
SHCLK F03 C1
SHDATA F03 C1
SHEN F03 C1
TP7 SHDAC
TP8 GND
+5V
-5V_ISO
+12V
-12V
R28 1k
R29 3.65k
R30 1k
R31 4.99k
R32 4.99k
R33 15
R34 15
R35 3.32k
R36 10k
R37 3.32k
Q3 2N3904
Q2 2N3906
CR7 1N5282
CR8 1N5282
C46 .1
C47 .1
C48 .1
C49 .1
C50 .1
C51 .47
C52 .47
C53 .1
C54 .47
C55 .1
C56 .1
C57 .1
C58 .1
C59 .1
C60 .1
C61 .1
C62 .1
N/C
0103-00-3000 A
NOTE: UNLESS OTHERWISE SPECIFIED
REMOVE ALL BURRS AND BREAK SHARP EDGES
MATERIAL
FINISH WAVETEK PROCESS
DO NOT SCALE DRAWING
DRAWN M.KINGSLEY
DATE 3-18-86
CHECKED
PROJ. ENGR.
RELEASE APPROV.
UNLESS OTHERWISE SPECIFIED DIMENSIONS ARE IN INCHES TOLERANCES ARE:
FRACTIONS ± DECIMALS .XX ± .XXX ± ANGLES ±
WAVETEK SAN DIEGO • CALIFORNIA
TITLE MOTHERBOARD SCHEMATIC
SIZE D
FSCM NO. 23338
DWG. NO. 0103-00-3000
REV A
SCALE NONE
MODEL 1288
SHEET 5 OF 10

THIS DOCUMENT CONTAINS PROPRIETARY INFORMATION AND DESIGN RIGHTS BELONGING TO WAVETEK AND MAY NOT BE REPRODUCED FOR ANY REASON EXCEPT CALIBRATION, OPERATION, AND MAINTENANCE WITHOUT WRITTEN AUTHORIZATION.

REV	ECO	BY	DATE	APP

FREQUENCY SYNTHESIZER

SCLK F03 C1
SDATA F03 C1
SEN F03 C1
SHCLK F03 B1
OSCIN F01 B2
MODEL 288 JMP-7

U13 MC145157P: CLK, DATA, EN, SROUT, OSCOUT, PDOUT, PHV, PHR, OSCIN, LD, FV, FR, FIN, REFOUT
+5VPLL
C39 .1
C34 .01
C35 3300pf
C36 .1
R22 21.5k
R19 9.09k
R20 9.09k
R21 1k
+5PLL
R24 1k
U14B
R23 10k
R25 8.87k
R26 1.78k
C41 1000pf
+12V
U14A MC34082P
C32 .1
C37 .1
C38 .1
-12V
C145 .1
FB3
C40 .1
R152 61.9
CR43 1N753A
+12V
C120 .1
U15 74LS624: VCO, EN, RNG, FC, CX1, CX2, Y, Z
N/C
R151 499
C42 33pf
C135 .1
TP5 LOOP CONTROL VOLTAGE
R27 499
C45 .1
HEATSINK AND TRANSIPAD
VR2 78M05: IN, GND, OUT
+5VPLL
C44 .1
C43 .1
+12V

U16A 74ALS74: SET, CLK, D, CLR, Q, Q̄
+5VPLL
N/C

MRST F03 D4

U17 DNC2016: MRES, SCLK, SEN, SDIN, PLD, TMEN, CLKA, SLDA, ALDA, CLKB, SLDB, ALDB, CYA, CYDA, CYB, CYDB
+5VPLL
+5VPLL
+5VPLL
N/C
N/C
N/C
N/C

TP17 SYOUT
R149 100
SYNTH B4 F03
TP6 GND

U16B 74ALS74: SET, CLK, D, CLR, Q, Q̄
+5VPLL
C33 .1

0103-00-3000 A

NOTE: UNLESS OTHERWISE SPECIFIED

REMOVE ALL BURRS AND BREAK SHARP EDGES	DRAWN M.KINGSLEY	DATE 3-18-85	WAVETEK SAN DIEGO, CALIFORNIA
MATERIAL	CHECKED		TITLE: MOTHERBOARD SCHEMATIC
	PROJ ENGR.		
FINISH WAVETEK PROCESS	RELEASE APPROV.		
DO NOT SCALE DRAWING	UNLESS OTHERWISE SPECIFIED DIMENSIONS ARE IN INCHES TOLERANCES: FRACTIONS DECIMALS ANGLES ± XX ± XXX ± ±		SIZE D · FSCM NO. 23338 · DWG. NO. 0103-00-3000 · REV A · SCALE NONE · MODEL 1288 · SHEET 4 OF 10

CUMENT CONTAINS PROPRIETARY INFORMATION
GN RIGHTS BELONGING TO WAVETEK AND MAY NOT
DUCED FOR ANY REASON EXCEPT CALIBRATION,
CN, AND MAINTENANCE WITHOUT WRITTEN AU-
TION.

REV	ECO	BY	DATE	APP

RELAY DRIVER NETWORK

+5V_ATTN
TRANSIPAD
Q6 2N2905A
POE F03 D1
R68 10k
C126 .1
FB1
+5V
+5V_ATTN
C124 22
C85 .1
K4D
K1D
C128 .01
C127 .01
CR20 1N5282
CR18 1N5282
MSELA F06 C2
MSELB F06 C2
+5V
C84 .1
CLK0 F01 D6
U30 74ALS574
QD7 F01 D6
QD6 F01 C6
QD5 F01 D6
QD4 F01 C6
QD3 F01 D6
QD2 F01 C6
QD1 F01 D6
QD0 F01 C6
K2D
K3D
K5D
C129 .01
CR17 1N5282
CR16 1N5282
CR19 1N5282
R143 10
R145 10
R146 10
R147 10
R148 10
C134 .01
C132 .01
C131 .01
C130 .01
C133 .01

UNBALANCED OUTPUT ATTENUATOR NETWORK AND IMPEDANCE CONTROL

UBOUT F01 B6
R75 49.9 .1% 1/4W
R76 49.9 .1% 1/4W
R77 1.10k .1%
R78 1.10k .1%
K2 HD1E-M-DC5V
K3 HD1E-M-DC5V
N/C
N/C
JMP8
UNBALOUT J19
R79 100k
OUT1 F02 B6
K1 DF2E-DC5V
R74 127k
R73 2.55K .1%
R70 28.7K
R72 51.1 .1% 1W
R71 51.1 .1% 1W
R69 28.7K

BALANCED OUTPUT ATTENUATOR NETWORK AND IMPEDANCE CONTROL

BOUT2 F01 B6
BOUT1 F01 B6
R83 75
R84 576
R82 75 .1%
R87 6.73k .1%
R86 6.73k .1%
R81 75 .1%
R80 75
R85 576
K4 DF2E-DC5V
R89 68.1 .1%
R88 68.1 .1%
R91 232 .1%
K5 DF2E-DC5V
R90 232 .1%
OUT2 B5 F02
R93 100k
N/C
N/C
J21 BAL OUT (-)
P13
J20 BAL OUT (+)
R92 100k
C136 .01
OUT3 B5 F02

NOTE: UNLESS OTHERWISE SPECIFIED

REMOVE ALL BURRS AND BREAK SHARP EDGES	DRAWN M.KINGSLEY	DATE 3-18-88	WAVETEK SAN DIEGO, CALIFORNIA
MATERIAL	CHECKED		TITLE: MOTHERBOARD SCHEMATIC
	PROJ. ENGR.		
FINISH WAVETEK PROCESS	RELEASE APPROV.		
DO NOT SCALE DRAWING	UNLESS OTHERWISE SPECIFIED DIMENSIONS ARE IN INCHES TOLERANCES ARE: FRACTIONS DECIMALS ANGLES ± .XX ± .XXX ± ±		SIZE D · FSCM NO. 23338 · DWG. NO. 0103-00-3000 · REV A · SCALE NONE · MODEL 1288 · SHEET 7 OF 10

0103-00-3000

THIS DOCUMENT CONTAINS PROPRIETARY INFORMATION AND DESIGN RIGHTS BELONGING TO WAVETEK AND MAY NOT BE REPRODUCED FOR ANY REASON EXCEPT CALIBRATION, OPERATION, AND MAINTENANCE WITHOUT WRITTEN AUTHORIZATION.

REV	ECO	BY	DATE	APP

SECONDARY INPUT/OUTPUT NETWORK

EXT FREQ INPUT J16
R38 1k
R39 9.09k
MODEL 288 ONLY
JMP1
JMP2
MODEL 289 ONLY
Q4 2N3904
Q5 2N4122
R40 4.99k
R41 1.5k
R42 2k
R43 2k
C64 .1
C65 .1
-12V
+12V
CR9 1N5282
CR10 1N5282
1N5282 CR11
1N5282 CR12
TP9 LIMXFREQ
C121 5.1pF
R45 200
R46 200
R44 1M
C73 .1
R138 15
+5V
TP10 BXFREQ
R48 100
U26 LT1016CJ
C144 TRIM
R47 3.92K
BXFREQ C4 F01

C66 .1
R59 1M
R57 10k
C67 22
C68 22
R58 100
U29A MC34082P
R60 1k
C70 .1
R62 1M
R63 1k
U29B
R61 576
R64 1k
C72 .1

R49 681
C75 22
C76 .1
CR13 1N751A
C77 .1
TP11 GND

+5V
C78 22
C79 .1
MODEL 289 ONLY
U27 74ALS253
N/C
R51 tbd
R52 tbd
R53 tbd
SYNTH D4 F01
PLS/SQR D4 F01
SQWAVE D4 F01
MSELA B7 F07
MSELB B7 F07
R54 200
R55 tbd
R56 78.7
JMP3
MODEL 288

CR14 1N5282
+5V_I/O
FB2
+5V
R67 2.21k
C81 220
C82 .1
C83 .1

+5V_I/O
U28B
C80 .1
N/C

J17 MOD_IN C2 F01
J18 SWPOUT B4 F01
SYNC_OUT J15
R65 15
C74 100pf
CR15 1N5282
R66 51.1 1W 0.1%
U28A 75121

NOTE: UNLESS OTHERWISE SPECIFIED

REMOVE ALL BURRS AND BREAK SHARP EDGES	DRAWN M.KINGSLEY	DATE 3-18-98	WAVETEK SAN DIEGO • CALIFORNIA
MATERIAL	CHECKED		TITLE: MOTHERBOARD SCHEMATIC
	PROJ. ENGR.		
FINISH WAVETEK PROCESS	RELEASE APPROV.		
DO NOT SCALE DRAWING	UNLESS OTHERWISE SPECIFIED DIMENSIONS ARE IN INCHES TOLERANCES ARE: FRACTIONS DECIMALS ANGLES ± .XX ± .XXX ±		SIZE D · FSCM NO. 23338 · DWG. NO. 0103-00-3000 · REV A · SCALE NONE · MODEL 1288 · SHEET 6 OF 10

0103-00-3000 A

DOCUMENT CONTAINS PROPRIETARY INFORMATION
DESIGN RIGHTS BELONGING TO WAVETEK AND MAY NOT
BE REPRODUCED FOR ANY REASON EXCEPT CALIBRATION,
OPERATION, AND MAINTENANCE WITHOUT WRITTEN AU-
THORIZATION.

REV	ECO	BY	DATE	APP

+/- 22V POWER SUPPLY

+/- 22V UNREGULATED POWER SUPPLY INPUT

P4-7

P4-10

P4-9

CR34 1N4002

CR30 1N4005

CR31 1N4005

VR7 LM317T

R119 6.8 1/2W

R118 6.8 1/2W

C119 100

R117 3.92k

R120 499

TP14 +22V

+22PV

+22VDC

C138 .01

+12REF F08 D2

R122 7.5k .1%

R123 1.5k .1%

R124 7.5k .1%

R125 7.5k .1%

+C111 1000

C112 .1

C110 .1

C7 .01

+C105 3300

C106 .1

CR35 1N4002

R121 3.92k

C109 .1

U33 MC34081P

TP16 GND

GND

CR36 1N4002

C114 .1

R126 3.92k

R131 4.99k

U34 MC34081P

+C107 3300

C108 .1

+C115 1000

C116 .1

CR32 1N4005

CR33 1N4005

R127 3.92k

C113 100

R130 499

R132 7.5% .1%

TP15 -22

VR8 LM337T

R128 6.8 1/2W

R129 6.8 1/2W

-22PV

-22VDC

C139 .01

CR37 1N4002

VFD AC FILAMENT SUPPLY

VFD FILAMENT UNREGULATED AC POWER SUPPLY INPUT

P4-4

P4-6

P4-5

FILB

FILA

C140 .01

C141 .01

CR38 1N4002

C118 .01

C142 .01

C143 .01

.1 C117

CR39 1N753A

-22VDC

NOTE: UNLESS OTHERWISE SPECIFIED

REMOVE ALL BURRS AND BREAK SHARP EDGES	DRAWN M.KINGSLEY	DATE 3-18-86	WAVETEK SAN DIEGO, CALIFORNIA
MATERIAL	CHECKED		TITLE: MOTHERBOARD SCHEMATIC
	PROJ. ENGR.		
FINISH WAVETEK PROCESS	RELEASE APPROV.		
DO NOT SCALE DRAWING	UNLESS OTHERWISE SPECIFIED DIMENSIONS ARE IN INCHES TOLERANCES ARE: FRACTIONS DECIMALS ANGLES ± XX ± XXX ± ±		SIZE D · FSCM NO. 23338 · DWG. NO. 0103-00-3000 · REV A · SCALE NONE · MODEL 1288 · SHEET 9 OF 10

0103-00-3000 A

THIS DOCUMENT CONTAINS PROPRIETARY INFORMATION AND DESIGN RIGHTS BELONGING TO WAVETEK AND MAY NOT BE REPRODUCED FOR ANY REASON EXCEPT CALIBRATION, OPERATION, AND MAINTENANCE WITHOUT WRITTEN AUTHORIZATION.

REV	ECO	BY	DATE	APP

+/- 12V POWER SUPPLIES

+/- 12V UNREGULATED POWER SUPPLY INPUT

P4-3

P4-1

P4-2

C86 .01

C87 .1

+C88 4700

C89 .1

+C90 4700

CR21 1N4002

CR22 1N4002

CR23 1N4002

CR24 1N4002

CR25 1N4002

CR26 1N4002

CR27 1N4002

CR28 1N4002

VR3 LM317T (IN, OUT, ADJ)

VR4 LM337T (ADJ, IN, OUT)

R94 3.9 1/2W

R95 2.7 1/2W

R96 3.92k

C91 100

R98 392

R97 3.92k

C92 .1

C93 .1

R108 3.92k

C94 100

R106 3.92k

R107 392

R105 3.9 1/2W

R104 2.7 1/2W

U31A MC34082P

U31B MC34082P

R99 2k .1%

R100 10k .1%

R101 7.5k .1%

R102 3.74k

R103 7.5k .1%

VREF F02 C4 F08 A7

U32 LT1021 (IN, OUT, GND)

+C95 2200

C96 .1

+C97 2200

C98 .1

+12REF F09 D4

JMP4

+12VDC

+12PV

JMP5

-12VDC

-12PV

GND

+5V POWER SUPPLY

DASH LINES INDICATE HEATSINK AND TRANSIPAD

+5V UNREGULATED POWER SUPPLY INPUT

P23

P22

CR40 (AC, AC, +, -)

C99 .01

+C100 6800

+C101 6800

R109 40.2

Q10 TIP-36

CR29 1N4002

Q7 2N2905A

R110 165

R111 3K .1%

VREF F08 D3

Q8 Q9 2N3904 (2)

R112 1k .1%

C102 .1

R113 182

R114 1k .1%

R115 1k .1%

+C103 1000

R116 499

C104 .1

JMP6

+5V

+5PV

GND

NOTE: UNLESS OTHERWISE SPECIFIED

REMOVE ALL BURRS AND BREAK SHARP EDGES	DRAWN M.KINGSLEY	DATE 3-19-86	WAVETEK SAN DIEGO, CALIFORNIA
MATERIAL	CHECKED		TITLE: MOTHERBOARD SCHEMATIC
	PROJ. ENGR.		
	RELEASE APPROV.		
FINISH WAVETEK PROCESS	UNLESS OTHERWISE SPECIFIED DIMENSIONS ARE IN INCHES TOLERANCES ARE: FRACTIONS DECIMALS ANGLES ± XX ± XXX ± °		SIZE D; FSCM NO. 23338; DWG. NO. 0103-00-3000; REV A
DO NOT SCALE DRAWING			SCALE NONE; MODEL 1288; SHEET 8 OF 10

0103-00-3000 A

DOCUMENT CONTAINS PROPRIETARY INFORMATION
DESIGN RIGHTS BELONGING TO WAVETEK AND MAY NOT
REPRODUCED FOR ANY REASON EXCEPT CALIBRATION,
ATION, AND MAINTENANCE WITHOUT WRITTEN AU-
IZATION.

REV	ECO	BY	DATE	APP
A	ERO 89-025	MK	11-2-88	

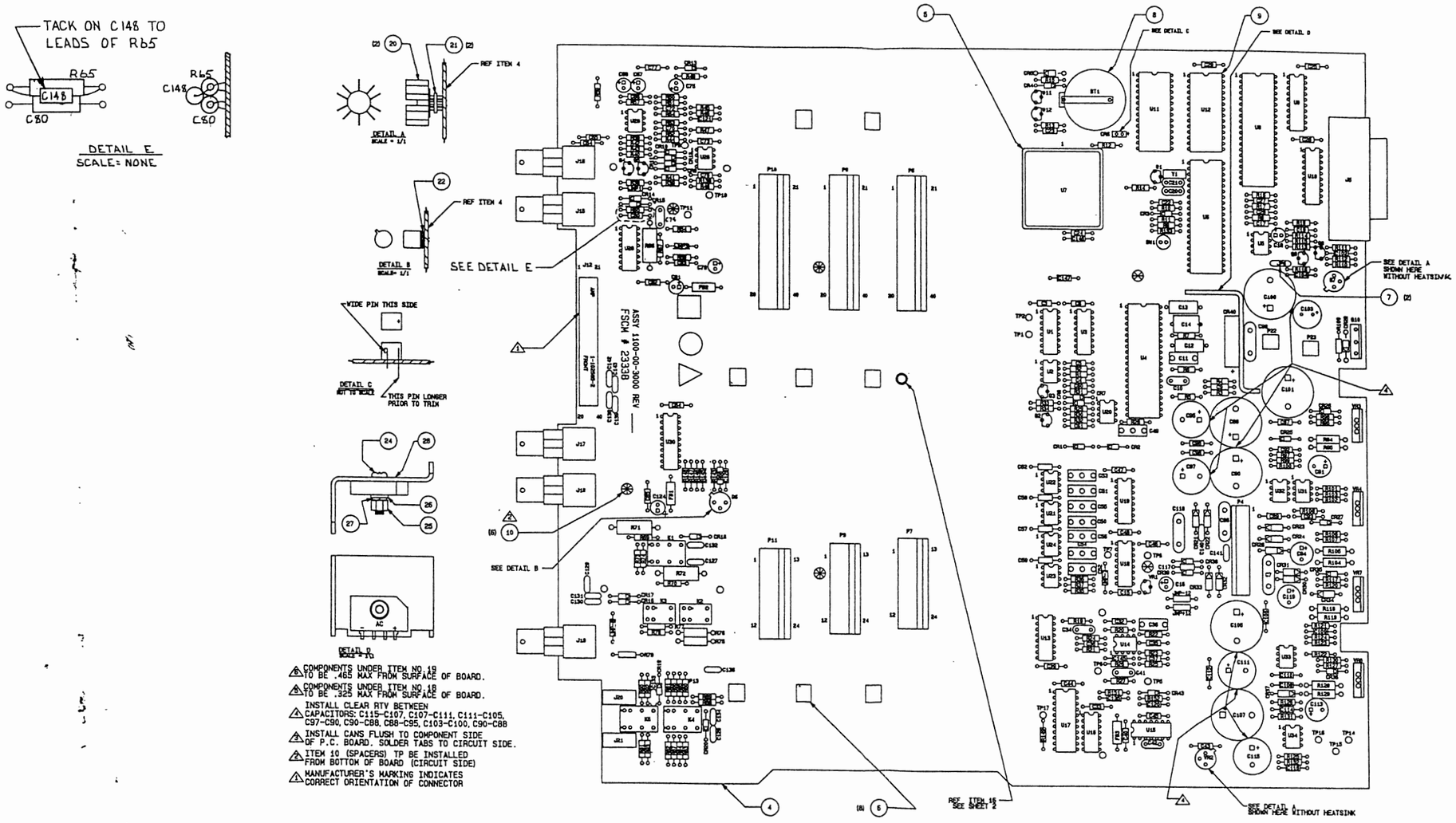

6 COMPONENTS UNDER ITEM NO.19 TO BE .465 MAX FROM SURFACE OF BOARD.

5 COMPONENTS UNDER ITEM NO.18 TO BE .325 MAX FROM SURFACE OF BOARD.

4 INSTALL CLEAR RTV BETWEEN CAPACITORS: C115-C107, C107-C111, C111-C105, C97-C90, C90-C88, C88-C95, C103-C100, C90-C88

3 INSTALL CANS FLUSH TO COMPONENT SIDE OF P.C. BOARD. SOLDER TABS TO CIRCUIT SIDE.

2 ITEM 10 (SPACERS) TP BE INSTALLED FROM BOTTOM OF BOARD (CIRCUIT SIDE)

1 MANUFACTURER'S MARKING INDICATES CORRECT ORIENTATION OF CONNECTOR

SEE SEPARATE PARTS LIST

REMOVE ALL BURRS AND BREAK SHARP EDGES	DRAWN M KINGSLEY	DATE 5-6-88	WAVETEK SAN DIEGO • CALIFORNIA
MATERIAL	CHECKED		TITLE ASSEMBLY MOTHER BOARD
	PROJ. ENGR		
FINISH WAVETEK PROCESS	RELEASE APPROV.	11/4/88	
DO NOT SCALE DRAWING	UNLESS OTHERWISE SPECIFIED DIMENSIONS ARE IN INCHES TOLERANCES ARE: FRACT ± .XX ± .010 .XXX ± .010		SIZE D · FSCM NO. 23338 · DWG. NO. 1100-00-3198 · REV A
			SCALE 1:1 · MODEL 288 · SHEET 1 OF 2

NOTE: UNLESS OTHERWISE SPECIFIED

THIS DOCUMENT CONTAINS PROPRIETARY INFORMATION AND DESIGN RIGHTS BELONGING TO WAVETEK AND MAY NOT BE REPRODUCED FOR ANY REASON EXCEPT CALIBRATION, OPERATION, AND MAINTENANCE WITHOUT WRITTEN AUTHORIZATION.

REV	ECO	BY	DATE	APP

GPIB SECTION

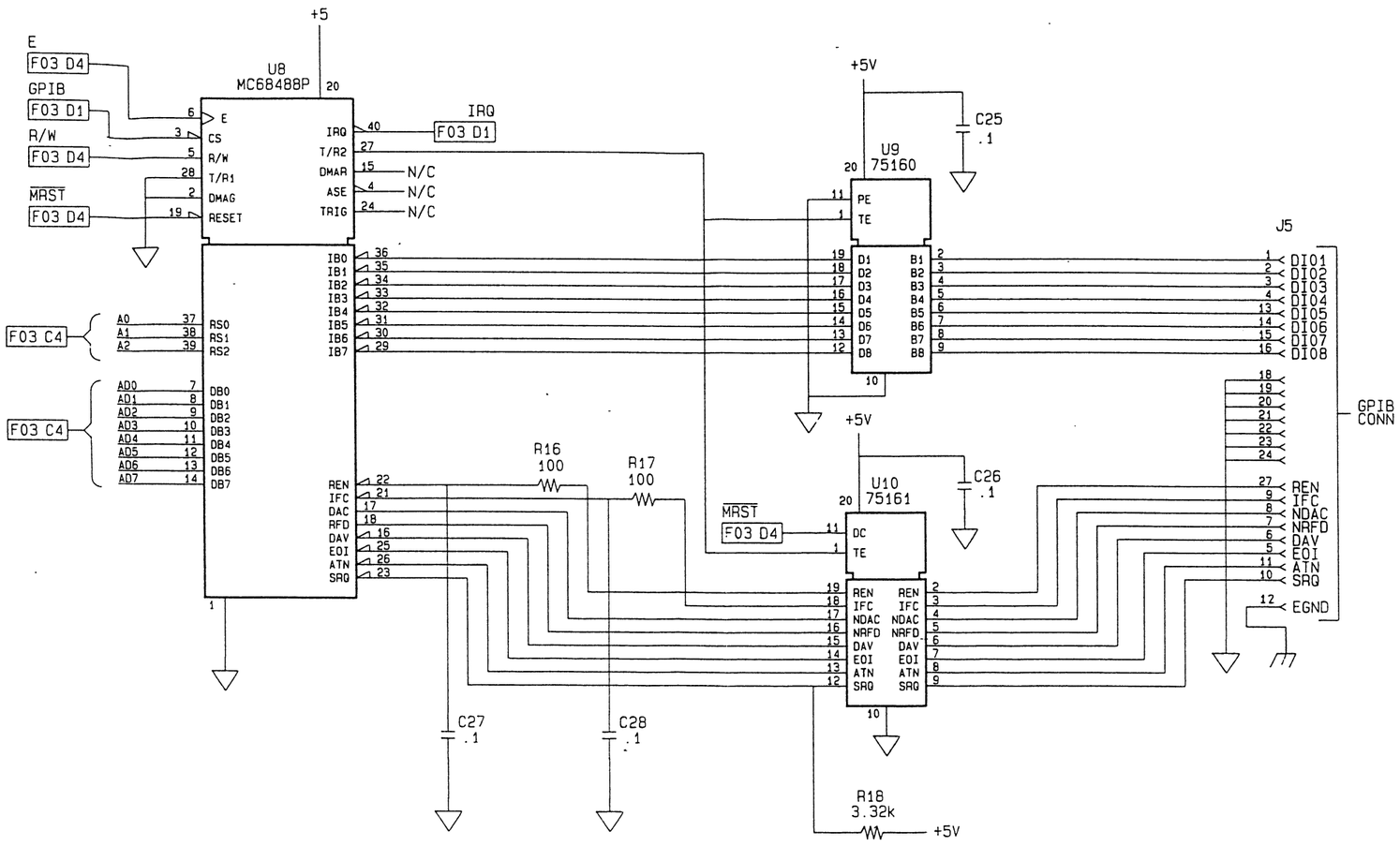

NOTE: UNLESS OTHERWISE SPECIFIED

REMOVE ALL BURRS AND BREAK SHARP EDGES	DRAWN M KINGSLEY	DATE 3-18-88	WAVETEK SAN DIEGO, CALIFORNIA
MATERIAL	CHECKED		TITLE: MOTHERBOARD SCHEMATIC
	PROJ. ENGR.		
	RELEASE APPROV.		
FINISH WAVETEK PROCESS	UNLESS OTHERWISE SPECIFIED DIMENSIONS ARE IN INCHES TOLERANCES ARE. FRACTIONS DECIMALS ANGLES .XX ± .XXX ± ±		SIZE D · FSCM NO. 23338 · DWG. NO. 0103-00-3000 · REV A
DO NOT SCALE DRAWING			SCALE NONE · MODEL 1288 · SHEET 10 OF 10

0103-00-3000 A

THIS DOCUMENT CONTAINS PROPRIETARY INFORMATION AND DESIGN RIGHTS BELONGING TO WAVETEK AND MAY NOT BE REPRODUCED FOR ANY REASON EXCEPT CALIBRATION, OPERATION, AND MAINTENANCE WITHOUT WRITTEN AUTHORIZATION.

REV	ECN	BY	DATE	APP
A	ERO 89-025	MK	11-2-89	

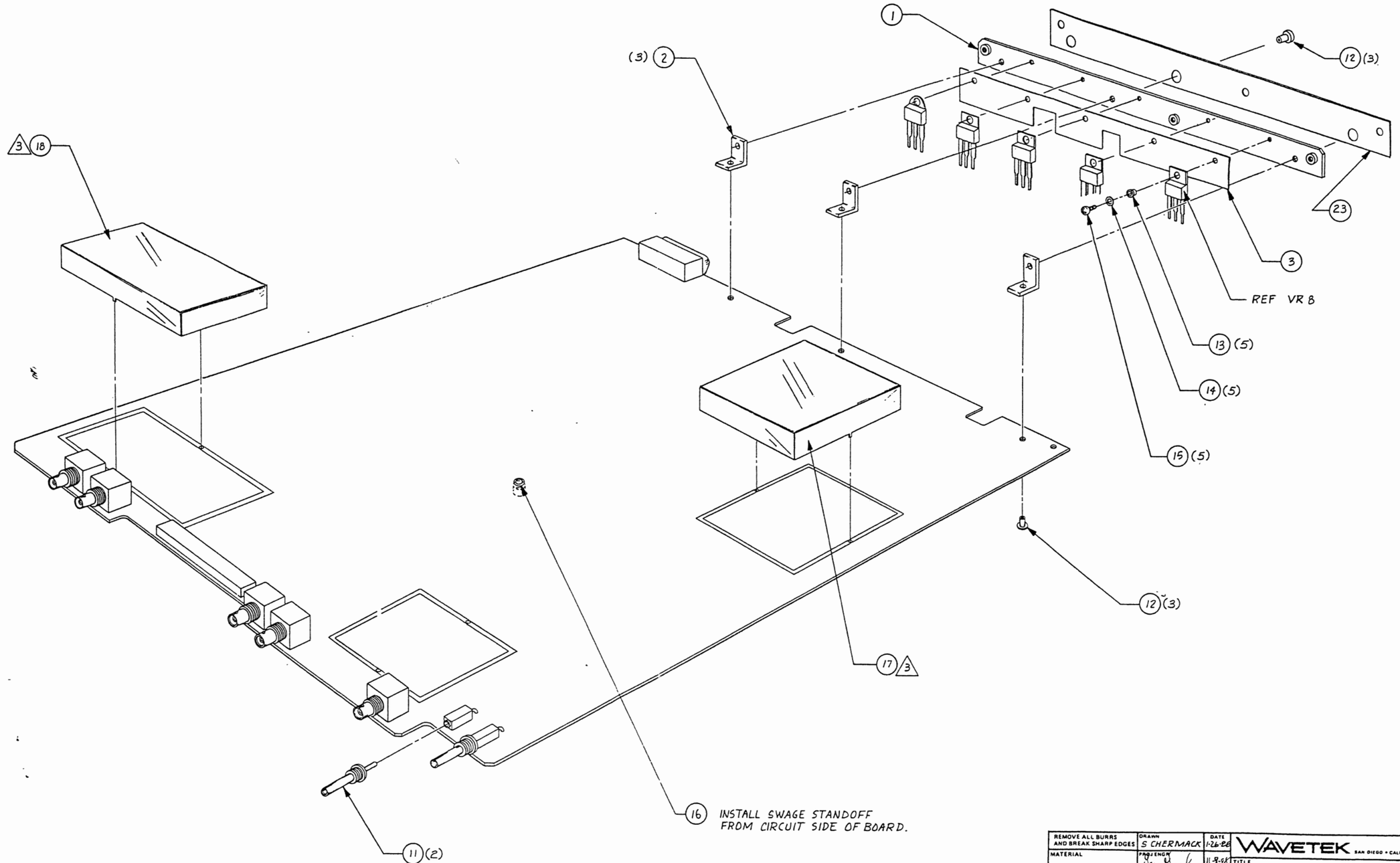

NOTE: UNLESS OTHERWISE SPECIFIED

REMOVE ALL BURRS AND BREAK SHARP EDGES	DRAWN S CHERMACK	DATE 11-26-88	WAVETEK SAN DIEGO • CALIFORNIA
MATERIAL	PROJ ENG'R	11-9-88	TITLE
	RELEASE APPROV		ASSEMBLY MOTHERBOARD
FINISH WAVETEK PROCESS	TOLERANCE UNLESS OTHERWISE SPECIFIED .XXX ±.010 ANGLES ±1° XX ±.030		
	DO NOT SCALE DWG	MODEL NO 288	DWG NO. 1100-00-3198 REV A
	SCALE NONE	CODE IDENT 23338	SHEET 2 OF 2

CUMENT CONTAINS PROPRIETARY INFORMATION
ION RIGHTS BELONGING TO WAVETEK AND MAY NOT
ODUCED FOR ANY REASON EXCEPT CALIBRATION,
ON, AND MAINTENANCE WITHOUT WRITTEN AU-
TION.

REV	ECO	BY	DATE	APP

EFERENCE DESIGNATORS	PART DESCRIPTION	ORIG-MFGR-PART-NO	MFGR	WAVETEK NO.	QTY/PT
ONE	PCA SUB, MOTHER BD 1288/288			1208-00-3000	1
7	CAN, SYNTHESIZER	1400-02-3443	WVTK	1400-02-3443	1
8	CAN, FREQ IN/SYNC OUT	1400-02-3453	WVTK	1400-02-3453	1
148	CAP, CER, 330PF, 100V, AXIAL	CAC02CD0331J100A	CORNG	1500-03-3106	1
5	NUT, HEX, 6-32, Z	MS35649-264	COML	2800-14-6100	1
6	WASHER #6 SAE FLAT, .375 O.D.	6 SAE FLAT WASHER	CMRCL	2800-26-6000	1
7	#6 LOCKWASHER, PLATED	#6SRLW	CMRCL	2800-42-6000	1
4	SCREW, PH, PHLPS, 6-32X9/16, SS	2800-61-6109	CMCRL	2800-61-6109	1
T1	BATTERY, 3V LITH, COIN CELL, 200 MAHR	DL2430	DURCL	4000-02-0012	1
12	EPROM, PROG, USES 1EA 8002-72-5610 FOR	8600-00-0520	WVTK	8600-00-0520	1

WAVETEK PARTS LIST	TITLE	ASSEMBLY NO.	REV
	PCA, MOTHER BD-288	1100-00-3198	A
		PAGE 1	

REFERENCE DESIGNATORS	PART DESCRIPTION	ORIG-MFGR-PART-NO	MFGR	WAVETEK NO.	QTY/PT
C120 C126 C135 C145 C15 C17 C19 C22 C23 C24 C25 C26 C27 C28 C29 C3 C32 C33 C37 C38 C39 C4 C40 C43 C44 C45 C46 C47 C48 C5 C57 C58 C59 C6 C60 C61 C62 C64 C65 C66 C70 C72 C73 C76 C77 C80 C82 C83 C84 C85 C87 C89 C9 C92 C93 C96 C98					
C20 C21	CAP, CER, 22PF, 100V, AXIAL	CAC02CD0220J100A	CORNG	1500-02-2006	2
C10	CAP, CER, 220PF, 100V, AXIAL	CAC02CD0221J100A	CORNG	1500-02-2106	1
C42	CAP, CER, 33PF, 100V+-5%, AXIAL	CAC02CD0330J100A	CORNG	1500-03-3006	1
C148	CAP, CER, 330PF, 100V, AXIAL	CAC02CD0331J100A	CORNG	1500-03-3106	1
C35	CAP, CER, 3300PF, 100V, 20%, AXIAL	CAC02X7R332M100A	CORNG	1500-03-3206	1
C121	CAP, CER, 5.1PF, 100V, AXIAL	CAC02CD05R1J100A	CORNG	1500-05-1906	1
C113 C119 C91 C94	CAP, ELECT, 100MF, 35V RADIAL LEAD, SP .20	NRE101M35VBX11	NIC	1500-31-0102	4
C111 C115	CAP, ELECT, 1000MF/50V RADIAL LEAD, SP .30	NRE102M50V16X25	NIC	1500-31-0203	2

WAVETEK PARTS LIST	TITLE	ASSEMBLY NO.	REV
	PCA SUB, MOTHER BD 1288/288	1208-00-3000	
		PAGE 2	

REFERENCE DESIGNATORS	PART DESCRIPTION	ORIG-MFGR-PART-NO	MFGR	WAVETEK NO.	QTY/PT
C12	CAP, POLYPRO, .056MF, 200V, 2%, AXIAL	CA1C563-C	IMB	1500-45-6300	1
4	PCB, MOTHER BOARD	1700-00-3000	WVTK	1700-00-3000	1
J15 J16 J17 J18 J19	CONN, BNC(PC)	227161-1	AMP	2100-01-0019	5
P4	CONN, HEADER	1-640386-0	AMP	2100-02-0079	1
J20 J21	PC JACK	09-9094-1-04	CONCD	2100-02-0190	2
J12	CONN, HEADER, 40 PIN, RECPT, 2X20, .1 CTR PCMT	1-102585-2	AMP	2100-02-0256	1
P7 P9 P11	CONN, HEADER, 24 PIN, PCMT, .1 CTR, 2X12, SHRD	102692-2	AMP	2100-02-0257	3
P6 P8 P10	CONN, HEADER, 40 PIN, PCB MT, .1 CTR, 2X20, SHRD	1-102692-3	AMP	2100-02-0258	3
J5	CONN, RECP, GPIB, 24POS, .125 TAIL, RT ANG, PC MT	488-2R4-24BM32K9	BURND	2100-02-0259	1
9	SOCKET, IC, 28 PIN	DILB28P-108T	BURND	2100-03-0081	1
5	SOCKET, 84 PIN, PLCC, THRU HOLE	821573-1	AMP	2100-03-0094	1
7	SOCKET, CLSD ENTRY,	450-3752-01-06-00	CAMB	2100-03-0096	2

WAVETEK PARTS LIST	TITLE	ASSEMBLY NO.	REV
	PCA SUB, MOTHER BD 1288/288	1208-00-3000	
		PAGE 4	

EFERENCE DESIGNATORS	PART DESCRIPTION	ORIG-MFGR-PART-NO	MFGR	WAVETEK NO.	QTY/PT
R1	G: N.V. REG 5V (79L05)	LM320LZ-5.0	NSC	120.0054	1
R39 CR43	SL ZR 6.2V 5% 400MW (1N753A)	1N753A	RDHM	131.9620	2
	THERMAL GASKET-REAR PANEL-A	1400-02-4400	WVTK	1400-02-4400	1
3	THERMAL GASKET-REAR PANEL-B	1400-02-4410	WVTK	1400-02-4410	1
8	HEATSINK BRIDGE	1400-02-4463	WVTK	1400-02-4463	1
ONE	SUPPPORT PLATE, TRANSISTOR	1400-02-5007	WVTK	1400-02-5007	1
74	CAP, CER, 100PF, 100V, AXIAL	CAC02CD0101J100A	CORNG	1500-01-0106	1
41	CAP, CER, .001MF, 100V	SA101C102MAATR	AVX	1500-01-0206	1
118 C7 C86 C99	CAP, CER, .01MF, 1KV	CAP-103	CRL	1500-01-0309	4
138 C139 C146 C147 C34	CAP CER MON .01MF 50V, AXIAL	CAC02Z5U103Z100A	CORNG	1500-01-0310	5
127 C128 C129 C130 C131 132 C133 C134 C136 C140 141 C142 C143	CAP CER MON .01MF 50V Z5U +80/-20% RAD LD .2	1C20Z5U103M050B	SPRAG	1500-01-0311	13
102 C104 C106 C108 C109 110 C112 C114 C116 C117	CAP, CER, MON, .1MF, 50V, AXIAL	CAC03Z5U104Z050A	CORNG	1500-01-0405	67

WAVETEK PARTS LIST	TITLE	ASSEMBLY NO.	REV
	PCA SUB, MOTHER BD 1288/288	1208-00-3000	
		PAGE 1	

REFERENCE DESIGNATORS	PART DESCRIPTION	ORIG-MFGR-PART-NO	MFGR	WAVETEK NO.	QTY/PT
C103	CAP, ELECT, 1000MF/16V RADIAL LEAD, SP .20	NRE102M16V10X20	NIC	1500-31-0211	1
CB1	CAP, ELECT, 220MF/10V	ECEA1AU221	PANAS	1500-32-2001	1
C124 C16 C18 C67 C68 C75 C78	CAP, ELECT, 22MF, 25V, RADIAL	SRA25VB22RM6X7LL	UNCON	1500-32-2002	7
C95 C97	CAP, ELECT, 2200MF, 16V RADIAL LEAD, SP .30	ECEA1CV222SC	PANAS	1500-32-2201	2
C105 C107	CAP, ELECT, 3300MF, 50V RADIAL LEAD, SP .40	NRE 3300/50	NIC	1500-33-3202	2
C88 C90	CAP, ELECT, 4700MF/25V RADIAL LEAD, SP .50	NRE472M25V22X41	NIC	1500-34-7202	2
C100 C101	CAP, ELECT, 6800MF, 16V RADIAL LEAD, SP .50	NRE682M16V22X41	NIC	1500-36-8201	2
C14	CAP, POLYC, .01MF, 100V, AXIAL	C31B103F	BISHO	1500-41-0304	1
C11 C36 C49 C50 C53 C55 C56	CAP, MET POLY, .1PP, 160V	171-104J160D	WEST	1500-41-0434	7
C13	CAP, MYLAR, 1MF, 100V, RADIAL	PMT2R1.0K100	ITT	1500-41-0524	1
C51 C52 C54	CAP, MET-POLY, 3%, 47MF, 63V RADIAL LEAD SP .2	168/.47/J/63/F	WEST	1500-44-7413	3

WAVETEK PARTS LIST	TITLE	ASSEMBLY NO.	REV
	PCA SUB, MOTHER BD 1288/288	1208-00-3000	
		PAGE 3	

REFERENCE DESIGNATORS	PART DESCRIPTION	ORIG-MFGR-PART-NO	MFGR	WAVETEK NO.	QTY/PT
	.040 PINS				
P13 P22 P23	TERMINAL TAB (FASTON)	62747-1	AMP	2100-04-0038	3
TP11 TP16 TP2 TP6 TP8	TEST POINT, BLK, PC	TP-104-01-00	COMPO	2100-04-0054	5
TP1 TP10 TP14 TP15 TP17 TP5 TP7 TP9	TEST POINT, RED, PC	TP-104-01-02	COMPO	2100-04-0055	8
11	CONN PIN, INSERT	2100-05-0061	WVTK	2100-05-0061	2
Y1	CRYSTAL, 4MHZ	180-502	MTRON	2300-99-0004	1
6	FUSE HOLDER, CLIP	102071	LITFU	2400-05-0031	8
16	STANDOFF, SW, 6-32X5/32, 1/16 SW, BR, ZN PL	3045-B-632-B MODL=5/32	RAF	2800-06-0062	1
20	HEAT SINK	207	WAKE	2800-11-0001	2
22	TRANSIPAD	10123N	METRS	2800-11-0003	1
21	TRANSIPAD	531-218	BIVAR	2800-11-0004	2
13	WASHER	3607-45	SEAST	2800-11-0015	5
12	RIVET, 1/8 BODY DIA, 1/8-3/16 GRIP SS	SSD436SBS	EMHRT	2800-12-0055	3
10	HOLE PLUG, BINDER HEAD, NTRAL NYLON	207-120241-03-0101	FASTX	2800-35-0009	6
14	WASHER, LOCK REG, S/S	MS 35338-135	CMRCL	2800-45-4000	5

WAVETEK PARTS LIST	TITLE	ASSEMBLY NO.	REV
	PCA SUB, MOTHER BD 1288/288	1208-00-3000	
		PAGE 5	

NOTE: UNLESS OTHERWISE SPECIFIED

REMOVE ALL BURRS AND BREAK SHARP EDGES	DRAWN	DATE	WAVETEK SAN DIEGO, CALIFORNIA
MATERIAL	CHECKED		TITLE
	PROJ. ENGR		PARTS LIST MOTHERBOARD
FINISH WAVETEK PROCESS	RELEASE APPROV.		
DO NOT SCALE DRAWING	UNLESS OTHERWISE SPECIFIED DIMENSIONS ARE IN INCHES TOLERANCES ARE: FRACTIONS DECIMALS ANGLES ± .XX ± .XXX ± ±		SIZE D · FSCM NO. 23338 · DWG. NO. 1100-00-3198 · REV A · SCALE · MODEL 288 · SHEET 1 OF 3

DOCUMENT CONTAINS PROPRIETARY INFORMATION
DESIGN RIGHTS BELONGING TO WAVETEK AND MAY NOT
BE REPRODUCED FOR ANY REASON EXCEPT CALIBRATION,
REPAIR, AND MAINTENANCE WITHOUT WRITTEN AUTHORIZATION.

REV	ECO	BY	DATE	APP

REFERENCE DESIGNATORS	PART DESCRIPTION	ORIG-MFGR-PART-NO	MFGR	WAVETEK NO.	QTY/PT
U32	VOLTAGE REFERENCE, 10V, 8 PIN DIP	LT1021CCN8-10	LINTE	7000-10-2101	1
U4	ADC, 12 BIT	ICL7109CPL	INTSL	7000-71-0900	1
U5	RESET GEN	TL7705A	TI	7000-77-0501	1
U2 U33 U34	OP AMP, HI SLEW RTE, WIDEBND, JFET, STD	MC34081P	MOT	7003-40-8100	3
U14 U20 U21 U22 U23 U24 U29 U31	OP AMP, HI SLEW RTE, WIDEBND, JFET DUAL	MC34082P	MOT	7003-40-8200	8
U28	DRIVER, DUAL LINE	SN75121N	TI	7007-51-2100	1
U19	MUX/DEMUX, ANALOG	CD4051BE	RCA	8000-40-5100	1
U11	SRAM, 8KX8, 150NS, CMOS	HM6264LP-15	HTACH	8000-62-6400	1
U6	MICROPROCESSOR, 8BIT	MC6803L	MOT	8000-68-0300	1
U16	FLIP-FLOP, DUAL D, POS EDGE TRIG W/CLR/PRES	SN74ALS74N	TI	8000-74-7403	1
VR2	VOLT REGULATOR	UA78M05HC	FAIR	8000-78-0501	1
U8	ADPT, GPIB INTERFACE	MC68488P	MOT	8006-84-8800	1
U30	FLIP-FLOP, OCTAL D	SN74ALS574N	TI	8007-45-7450	1
U15	VCO, TTL	74LS624	TI	8007-46-2410	1
U9	XCVR, OSC BUS, TTL	75160	TI	8007-51-6000	1

WAVETEK PARTS LIST	TITLE	ASSEMBLY NO.	REV
	PCA SUB, MOTHER BD 1288/288	1208-00-3000	

PAGE 12

REFERENCE DESIGNATORS	PART DESCRIPTION	ORIG-MFGR-PART-NO	MFGR	WAVETEK NO.	QTY/PT
U10	TRANSCEIVER, OCT BUS, TTL	SN75161BN	TI	8007-51-6100	1
U13	PLL	MC145157P2	MOT	8014-51-5700	1
U7	GATE ARRAY, 84 PIN, PSC288	PSC288	PLESS	8700-00-0003	1
U17	ARRAY, GATE, SPEED GRADED DNC 2016-3	DNC 2016-3	CDI	8700-00-0005	1

WAVETEK PARTS LIST	TITLE	ASSEMBLY NO.	REV
	PCA SUB, MOTHER BD 1288/288	1208-00-3000	

PAGE 13

NOTE: UNLESS OTHERWISE SPECIFIED

REMOVE ALL BURRS AND BREAK SHARP EDGES	DRAWN	DATE	WAVETEK SAN DIEGO, CALIFORNIA
MATERIAL	CHECKED		TITLE: PARTS LIST MOTHERBOARD
	PROJ. ENGR.		
	RELEASE APPROV.		
FINISH: WAVETEK PROCESS	UNLESS OTHERWISE SPECIFIED DIMENSIONS ARE IN INCHES TOLERANCES ARE: FRACTIONS ± DECIMALS .XX ± .XXX ± ANGLES ±		SIZE D · FSCM NO. 23338 · DWG. NO. 1100-00-3198 · REV A
DO NOT SCALE DRAWING			SCALE · MODEL 288 · SHEET 3 OF 3

THIS DOCUMENT CONTAINS PROPRIETARY INFORMATION AND DESIGN RIGHTS BELONGING TO WAVETEK AND MAY NOT BE REPRODUCED FOR ANY REASON EXCEPT CALIBRATION, OPERATION, AND MAINTENANCE WITHOUT WRITTEN AUTHORIZATION.

REV	ECO	BY	DATE	APP

REFERENCE DESIGNATORS	PART DESCRIPTION	ORIG-MFGR-PART-NO	MFGR	WAVETEK NO.	QTY/PT
	#4				
15	SCREW PLPS PAN M/S 18-8 S/S 4-40X1/4	MS 51957-13	CMRCL	2800-48-4104	5
JMP6	JUMPER	461-2871-01-03-10	CAMBN	3000-00-0034	1
B	BATTERY HOLDER, LITH COIN CELL	BH1000	MEMPD	3000-00-0175	1
FB1 FB2 FB3	BALUN CORE, FERRITE, 680 OHMS	2943666671	FARIT	3100-00-0017	3
K1 K4 K5	RELAY, 2 FORMC, 5V, DIP 14	DF2E-DC5V	AROMT	4500-00-0033	3
K2 K3	RELAY, 1 FORMC, 5V, .312H, .296W	HD1E-M-DC5V	AROMT	4500-00-0034	2
R104 R95	RES, C, 1/2W, 5%, 2.7	RC-1/2-2R7J	STKPL	4700-25-0279	2
R105 R94	RES, C, 1/2W, 5%, 3.9	RC-1/2-3R9J	STKPL	4700-25-0399	2
R118 R119 R128 R129	RES, C, 1/2W, 5%, 6.8	RC-1/2-6R8J	STKPL	4700-25-0689	4
R112 R114 R115	RES, MF, 1/8W, .1%, 1K	RN55E-1001B	MEPCO	4701-02-1001	3
R100	RES, MF, 1/8W, .1%, 10K	RN55E-1002B	MEPCO	4701-02-1002	1
R77 R78	RES, MFLM, 1/8W, .1%, 1.1K	5033RE1101B	MEPCO	4701-02-1101	2
R123 R2	RES, MF, 1/8W, .1%, 1.5K	RN55E-1501B	CORNG	4701-02-1501	2

WAVETEK PARTS LIST — TITLE: PCA SUB, MOTHER BD 1288/288 — ASSEMBLY NO. 1208-00-3000 — REV

REFERENCE DESIGNATORS	PART DESCRIPTION	ORIG-MFGR-PART-NO	MFGR	WAVETEK NO.	QTY/PT
R44 R59 R62	RES, MF, 1/8W, 1%, 1M	RN55D-1004F	TRW	4701-03-1004	3
R143 R145 R146 R147 R148	RES, MF, 1/8W, 1%, 10	5043ED10R100F	MEPCO	4701-03-1009	5
R74	RES, MFLM, 1/8W, 1%, 127K	5033RD1273F	MEPCO	4701-03-1273	1
R41	RES, MF, 1/8W, 1%, 1.5K	RN55D-1501F	TRW	4701-03-1501	1
R138 R33 R34 R65	RES, MF, 1/8W, 1%, 15	RN55D-15R0F	TRW	4701-03-1509	4
R110	RES, MF, 1/8W, 1%, 165	RN55D-1650F	TRW	4701-03-1650	1
R26	RES, MF, 1/8W, 1%, 1.78K	RN55D-1781F	TRW	4701-03-1781	1
R113	RES, MF, 1/8W, 1%, 182	RN55D-1820F	TRW	4701-03-1820	1
R45 R46 R54	RES, MF, 1/8W, 1%, 200	RN55D-2000F	TRW	4701-03-2000	3
R42 R43	RES, MF, 1/8W, 1%, 2K	RN55D-2001F	TRW	4701-03-2001	2
R6	RES, MF, 1/8W, 1%, 200K	RN55D-2003F	MEPCO	4701-03-2003	1
R22	RES, MF, 1/8W, 1%, 21.5K	RN55D-2152F	TRW	4701-03-2152	1
R15 R67	RES, MF, 1/8W, 1%, 2.21K	RN55D-2211F	TRW	4701-03-2211	2
R13	RES, MF, 1/8W, 1%, 274	RN55D-2740F	TRW	4701-03-2740	1
R69 R70	RES, MF, 1/8W, 1%, 28.7K	RN55D-2872F	TRW	4701-03-2872	2
R18 R35 R37	RES, MF, 1/8W, 1%, 3.32K	RN55D-3321F	TRW	4701-03-3321	3
R29	RES, MF, 1/8W, 1%, 3.65K	RN55D-3651F	TRW	4701-03-3651	1

WAVETEK PARTS LIST — TITLE: PCA SUB, MOTHER BD 1288/288 — ASSEMBLY NO. 1208-00-3000 — REV

REFERENCE DESIGNATORS	PART DESCRIPTION	ORIG-MFGR-PART-NO	MFGR	WAVETEK NO.	QTY/PT
	9				
R66 R71 R72	RES, MFLM, 1W, .1%, 51.1	5053RE51R1B	MEPCO	4701-32-5119	3
JMP+12 JMP-12 JMP1 JMP3 JMP7 JMP8	RES, 0 OHM JUMPER	JP02T68C	ROHM	4799-00-0087	6
CR13	DIODE, ZENOR, 5.1V, 500MW, GIB, IN751A	1N751A	FAIR	4801-01-0751	1
CR1 CR10 CR11 CR12 CR14 CR15 CR16 CR17 CR18 CR19 CR2 CR20 CR7 CR8 CR9	DIODE, HIGH CONDUCTANCE, ULTRA FAST	1N5282	FAIR	4801-01-5282	15
CR21 CR22 CR23 CR24 CR25 CR26 CR27 CR28 CR29 CR34 CR35 CR36 CR37 CR38	DIODE, 1N4002 GEN PURPOSE RECT. 100V, 1A	1N4002	FAIR	4801-02-0001	14
CR30 CR31 CR32 CR33	DIODE 1N4005 GENERAL PURPOSE, RECTIFIER, 600 V, 1A	1N4005	MOT	4806-01-4005	4
CR5	DIODE, RECT, SCH BARRIER	MBR 120	MOT	4806-02-0120	1
CR3 CR4	DIODE 5082-2811 SCHOTTKY, 15V, 20MA	5082-2811	HP	4809-02-2811	2
CR40	BRIDGE ASSY, 4 AMP	RS602	DIODE	4899-00-0037	1
CR6	LED, GREEN, RECT BAR	LTL-3231A	LITE	4899-00-0057	1
Q6 Q7	TRANS 2N2905A PNP	2N2905A	NSC	4901-02-9051	2

WAVETEK PARTS LIST — TITLE: PCA SUB, MOTHER BD 1288/288 — ASSEMBLY NO. 1208-00-3000 — REV

REFERENCE DESIGNATORS	PART DESCRIPTION	ORIG-MFGR-PART-NO	MFGR	WAVETEK NO.	QTY/PT
R99	RES, MF, 1/8W, .1%, 2K	RN55E-2001B	MEPCO	4701-02-2001	1
R90 R91	RES, MFLM, 1/8W, .1%, 232	5033RE2320B	MEPCO	4701-02-2320	2
R73	RES, MFLM, 1/8W, .1%, 2.55K	5033RE2551B	MEPCO	4701-02-2551	1
R1 R111 R3	RES, MF, 1/8W, .1%, 3K	RN55E-3001B	MEPCO	4701-02-3001	3
R86 R87	RES, MFLM, 1/8W, .1%, 6.73K	5033RE6731B	MEPCO	4701-02-6731	2
R88 R89	RES, MFLM, 1/8W, .1%, 68.1	5033RE6819B	MEPCO	4701-02-6819	2
R4	RES, MF, 1/8W, .1%, 750	RN55E-7500B	MEPCO	4701-02-7500	1
R101 R103 R122 R124 R125 R132	RES, MF, 1/8W, .1%, 7.5K	RN55E-7501B	MEPCO	4701-02-7501	6
R81 R82	RES, MFLM, 1/8W, .1%, 75	5033RE7509B	MEPCO	4701-02-7509	2
R149 R16 R17 R48 R58	RES, MF, 1/8W, 1%, 100	RN55D-1000F	TRW	4701-03-1000	5
R21 R24 R28 R30 R36 R60 R63 R64	RES, MF, 1/8W, 1%, 1K	RN55D-1001F	TRW	4701-03-1001	8
R10 R11 R133 R23 R36 R5 R57 R68 R8 R9	RES, MF, 1/8W, 1%, 10K	RN55D-1002F	TRW	4701-03-1002	10
R7 R79 R92 R93	RES, MF, 1/8W, 1%, 100K	RN55D-1003F	TRW	4701-03-1003	4

WAVETEK PARTS LIST — TITLE: PCA SUB, MOTHER BD 1288/288 — ASSEMBLY NO. 1208-00-3000 — REV

REFERENCE DESIGNATORS	PART DESCRIPTION	ORIG-MFGR-PART-NO	MFGR	WAVETEK NO.	QTY/PT
R102	RES, MF, 1/8W, 1%, 3.74K	RN55D-3741F	TRW	4701-03-3741	1
R107 R98	RES, MF, 1/8W, 1%, 392	RN55D-3920F	TRW	4701-03-3920	2
R106 R108 R117 R121 R126 R127 R47 R96 R97	RES, MF, 1/8W, 1%, 3.92K	RN55D-3921F	TRW	4701-03-3921	9
R109	RES, MF, 1/8W, 1%, 40.2	RN55D-40R2F	TRW	4701-03-4029	1
R116 R120 R130 R151 R27	RES, MF, 1/8, 1%, 499	RN55D-4990F	TRW	4701-03-4990	5
R131 R31 R32 R40	RES, MF, 1/8W, 1%, 4.99K	RN55D-4991F	TRW	4701-03-4991	4
R12 R14	RES, MF, 1/8W, 1%, 49.9K	RN55D-4992F	TRW	4701-03-4992	2
R61	RES, MF, 1/8W, 1%, 576	RN55D-5760F	TRW	4701-03-5760	1
R84 R85	RES, MF, 1/8W, 1%, 604	RN55D-6040F	TRW	4701-03-6040	2
R152	RES, MF, 1/8W, 1%, 61.9	RN55D-61R9F	TRW	4701-03-6199	1
R49	RES, MF, 1/8W, 1%, 681	RN55D-6810F	TRW	4701-03-6810	1
R80 R83	RES, MFLM, 1/8W, 1%, 75	5033RD75R0F	MEPCO	4701-03-7509	2
R56	RES, MF, 1/8W, 1%, 78.7	RN55D-78R7F	TRW	4701-03-7879	1
R25	RES, MF, 1/8W, 1%, 8.87K	RN55D-8871F	TRW	4701-03-8871	1
R19 R20 R39	RES, MF, 1/8W, 1%, 9.09K	RN55D-9091F	TRW	4701-03-9091	3
R75 R76	RES, MFLM, 1/4W, .1%, 49.	5043RE49R9B	MEPCO	4701-12-4999	2

WAVETEK PARTS LIST — TITLE: PCA SUB, MOTHER BD 1288/288 — ASSEMBLY NO. 1208-00-3000 — REV

REFERENCE DESIGNATORS	PART DESCRIPTION	ORIG-MFGR-PART-NO	MFGR	WAVETEK NO.	QTY/PT
	GENERAL PURPOSE TO-5				
Q1 Q3 Q4 Q8 Q9	TRANS 2N3904 NPN GENERAL PURPOSE TO-92	2N3904	FAIR	4901-03-9040	5
Q2	TRANS 2N3906 PNP GENERAL PURPOSE TO-92	2N3906	FAIR	4901-03-9060	1
Q5	TRANS, GENERAL PURPOSE, PNP, TO-92	2N4122	NSC	4901-04-1220	1
Q11 Q12	TRANS	VN10KM	SLCON	4902-00-0100	2
Q10	TRANS	TIP-36	TI	4902-00-0360	1
SW1	SWITCH, MIN PUSHBUTTON, SPST BLK	39-405	GRAHL	5102-00-0015	1
U18	DAC, SERIAL INP, 16 BIT, MONO	PCM56P	BURR	7000-00-5600	1
VR3 VR7	VOLT REGULATOR, 3 TERMINAL ADJUSTABLE POS	LM317T	NSC	7000-03-1700	2
VR4 VR8	VOLT REGULATOR	LM337T	NSC	7000-03-3700	2
U1 U3	MUX, CMOS, D 4C, 8 CHAN/DUAL 4 CHAN ANAL	DG508ACJ	SLCON	7000-05-0800	2
U26	COMPARATOR, ULTRA FAST, 10NS	LT1016CN8	LINTE	7000-10-1600	1

WAVETEK PARTS LIST — TITLE: PCA SUB, MOTHER BD 1288/288 — ASSEMBLY NO. 1208-00-3000 — REV

NOTE UNLESS OTHERWISE SPECIFIED

REMOVE ALL BURRS AND BREAK SHARP EDGES	DRAWN	DATE
MATERIAL	CHECKED	
	PROJ. ENGR.	
	RELEASE APPROV	
FINISH WAVETEK PROCESS	UNLESS OTHERWISE SPECIFIED DIMENSIONS ARE IN INCHES TOLERANCES ARE: FRACTIONS ± DECIMALS .XX ± .XXX ± ANGLES ±	
DO NOT SCALE DRAWING		

WAVETEK SAN DIEGO, CALIFORNIA

TITLE: PARTS LIST MOTHERBOARD

SIZE	FSCM NO.	DWG. NO.	REV
D	23338	1100-00-3198	A

SCALE | MODEL 288 | SHEET 2 OF 3

DOCUMENT CONTAINS PROPRIETARY INFORMATION
DESIGN RIGHTS BELONGING TO WAVETEK,AND MAY NOT
BE PRODUCED FOR ANY REASON EXCEPT CALIBRATION,
OPERATION, AND MAINTENANCE WITHOUT WRITTEN AU-
THORIZATION.

REV	ECO	BY	DATE	APP

REFERENCE DESIGNATORS	PART DESCRIPTION	ORIG-MFGR-PART-NO	MFGR	WAVETEK NO.	QTY/PT
1	ASSY, DISPLAY/KEYBOARD	1100-00-3001	WVTK	1100-00-3001	1
11	CABLE ASSEMBLY, AC SWITCH	1207-00-3008	WVTK	1207-00-3008	1
4	WIRE ASSY	1207-00-3010	WVTK	1207-00-3010	1
5	FRONT PANEL, MOLDED	1400-02-3230	WVTK	1400-02-3230	1
12	HANDLE, PTD	1400-02-3252	WVTK	1400-02-3252	2
6	OVERLAY	1400-02-3280	WVTK	1400-02-3280	1
14	KEYPAD, 1288	1400-02-3420	CRT	1400-02-3420	1
3	WINDOW, DISPLAY	1400-02-3560	WVTK	1400-02-3560	1
7	LUG, GROUNDING	159	SMITH	2100-04-0043	1
8	KNOB COLLET, .250 SHFT, 1 7/8DIAX5/8, HIGH, BR-NY	2400-01-0036	SELCO	2400-01-0036	1
16	NUT, PUSH, FASTENER, ROUND, 3/32 ID	PS 094032	PAL	2800-09-0034	18
10	RIVET, NYLON, BLK, .140. D.	27P1F00438	MICRO	2800-12-0058	4
17	WASHER, NYL, #2CLR, ID 3/32, OD 1/4, THK 1/32	2652	SMITH	2800-26-0010	7

WAVETEK PARTS LIST | TITLE: ASY, FRONT PANEL-288 | ASSEMBLY NO. 1101-00-3199 | REV A

REFERENCE DESIGNATORS	PART DESCRIPTION	ORIG-MFGR-PART-NO	MFGR	WAVETEK NO.	QTY/PT
20	WASHER, LOCK, REG S/S #6	MS 35338-136	CMRCL	2800-45-6000	1
15	SCREW, 2 X 5/16, TYPE B, THD FORM, PH, SS	2800-57-2905	CMRCL	2800-57-2905	9
19	SCREW, PH, 6-32 X 5/16, PHLPS, NYLOK, SS	2800-59-6105	CMRCL	2800-59-6105	1
13	SCREW, 8-32X7/16, 100DE G FH PHLPS, SS, NYLOK	2800-60-8107	CMRCL	2800-60-8107	4

WAVETEK PARTS LIST | TITLE: ASY, FRONT PANEL-288 | ASSEMBLY NO. 1101-00-3199 | REV A

NOTE: UNLESS OTHERWISE SPECIFIED

REMOVE ALL BURRS AND BREAK SHARP EDGES	DRAWN	DATE	WAVETEK SAN DIEGO, CALIFORNIA
MATERIAL	CHECKED		TITLE: PARTS LIST FRONT PANEL
	PROJ. ENGR.		
	RELEASE APPROV.		
FINISH WAVETEK PROCESS	UNLESS OTHERWISE SPECIFIED DIMENSIONS ARE IN INCHES TOLERANCES ARE: FRACTIONS ± DECIMALS .XX ± .XXX ± ANGLES ±		SIZE D | FSCM NO. 23338 | DWG. NO. 1101-00-3199 | REV A
DO NOT SCALE DRAWING			SCALE | MODEL 288 | SHEET 1 OF 1

THIS DOCUMENT CONTAINS PROPRIETARY INFORMATION AND DESIGN RIGHTS BELONGING TO WAVETEK AND MAY NOT BE REPRODUCED FOR ANY REASON EXCEPT CALIBRATION, OPERATION, AND MAINTENANCE WITHOUT WRITTEN AUTHORIZATION

REV	ECO	BY	DATE	APP
A	ERO 89-025	MK	11/2/88	[illegible]

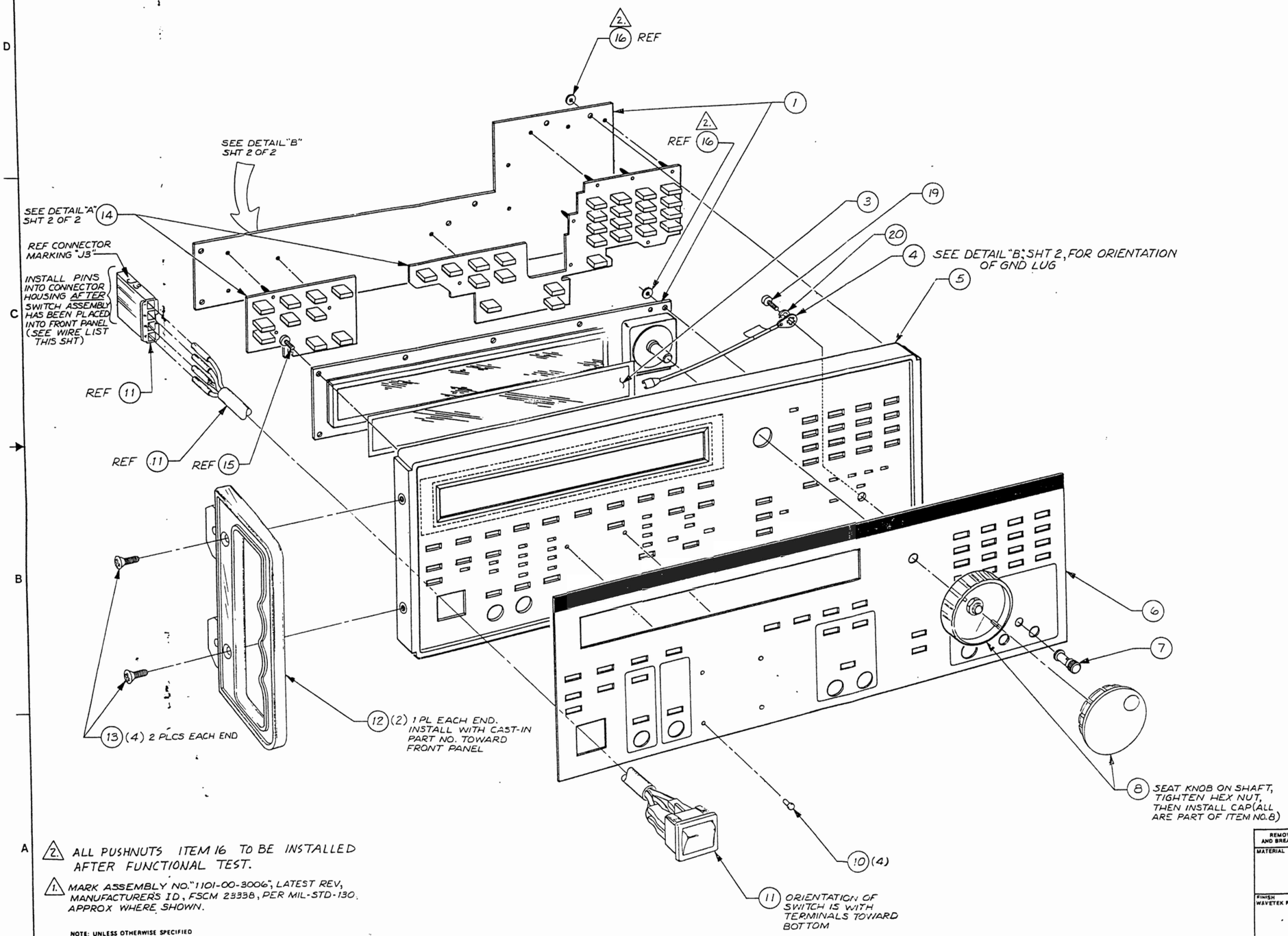

WIRE LIST

"J3" CONN PIN NO.	WIRE COLOR	SWITCH TERMINAL (REF)
3	RED	2A
2	WHT	1A
4	GRN	5B
1	BLK	4B

SEE SEPARATE PARTS LIST

2. ALL PUSHNUTS ITEM 16 TO BE INSTALLED AFTER FUNCTIONAL TEST.

1. MARK ASSEMBLY NO. "1101-00-3006", LATEST REV, MANUFACTURER'S ID, FSCM 23338, PER MIL-STD-130. APPROX WHERE SHOWN.

NOTE: UNLESS OTHERWISE SPECIFIED

REMOVE ALL BURRS AND BREAK SHARP EDGES	DRAWN CHERMACK	DATE	WAVETEK SAN DIEGO • CALIFORNIA
MATERIAL	CHECKED M. Hurok	11/9/88	TITLE ASSEMBLY, FRONT PANEL
	PROJ. ENGR. [signature]	11-4-88	
FINISH WAVETEK PROCESS	RELEASE APPROV. [signature]	11/4/88	
	UNLESS OTHERWISE SPECIFIED DIMENSIONS ARE IN INCHES TOLERANCES ARE: FRACTIONS ± / DECIMALS .XX ± .XXX ± / ANGLES ±		SIZE D · FSCM NO. 23338 · DWG. NO. 1101-00-3199 · REV A
DO NOT SCALE DRAWING			SCALE NONE · MODEL 288

DOCUMENT CONTAINS PROPRIETARY INFORMATION
SIGN RIGHTS BELONGING TO WAVETEK AND MAY NOT
REPRODUCED FOR ANY REASON EXCEPT CALIBRATION,
TION, AND MAINTENANCE WITHOUT WRITTEN AU-
ATION.

REV	ECO	BY	DATE	APP

-22V
F01 C1
GND
F01 B1
+22V
F01 B1
FILA
F01 B1
FILB
F01 B1
CHA
F01 B1
CHB
F01 B1

+5V
U3
74ALS574
20
C19
.1
RN7
270
RN7
270
CR1
CR2
UNLK
ON
FPREG
F03 C8
QD0
F01 C1
QD1
F01 C1
QD2
F01 C1
QD3
F01 C1
QD4
F01 C1
QD5
F01 C1
QD6
F01 C1
QD7
F01 C1
CLK
OC
1D 2D 3D 4D 5D 6D 7D 8D
1Q 2Q 3Q 4Q 5Q 6Q 7Q 8Q
J1A
1 2 3 4 5 6 7 8 9 10 11 12
F01 B8

+5V
U2
4051
16
C16
.1
S0
S1
S2
6
+5V
3
A
B0 B1 B2 B3 B4 B5 B6 B7
13 14 15 12 1 5 2 4
7 8

AMPL FREQ FUNC SEL OFFSET 1 0 7 4
SYNM CAL NOT USED PHASE 2 . 8 5
DISP RESET NOT USED NOT USED 3 +/- 9 6
PANEL LOCK ON/OFF PHS LK NOT USED PARM RESET EXP ENTER KNOB CE
ADDRS OUTPUT SELECT LOCAL NOT USED
START/ STOP MOD SELECT NOT USED TIME

P10 C1 F01
P11 C1 F01
P12 C1 F01
P13 C1 F01
P14 C1 F01
P15 C1 F01
P16 C1 F01
P17 C1 F01

RN5
10K
RN9
10K

NOTE: UNLESS OTHERWISE SPECIFIED

REMOVE ALL BURRS AND BREAK SHARP EDGES	DRAWN M.KINGSLEY	DATE 3-10-96	WAVETEK SAN DIEGO, CALIFORNIA
MATERIAL	CHECKED		TITLE: SCHEMATIC DISPLAY/KEYBOARD
FINISH WAVETEK PROCESS	PROJ. ENGR.		
DO NOT SCALE DRAWING	RELEASE APPROV.		SIZE D · FSCM NO. 23338 · DWG NO. 0103-00-3001 · REV A
	UNLESS OTHERWISE SPECIFIED DIMENSIONS ARE IN INCHES TOLERANCES ARE: FRACTIONS ± DECIMALS .XX ± .XXX ± ANGLES ±		SCALE NONE · MODEL 1288 · SHEET 2 OF 3

0103-00-3001 A

THIS DOCUMENT CONTAINS PROPRIETARY INFORMATION AND DESIGN RIGHTS BELONGING TO WAVETEK AND MAY NOT BE REPRODUCED FOR ANY REASON EXCEPT CALIBRATION, OPERATION, AND MAINTENANCE WITHOUT WRITTEN AUTHORIZATION.

REV	ECO	BY	DATE	APP
A	ERO 9896	MG	5-25-88	[illegible]

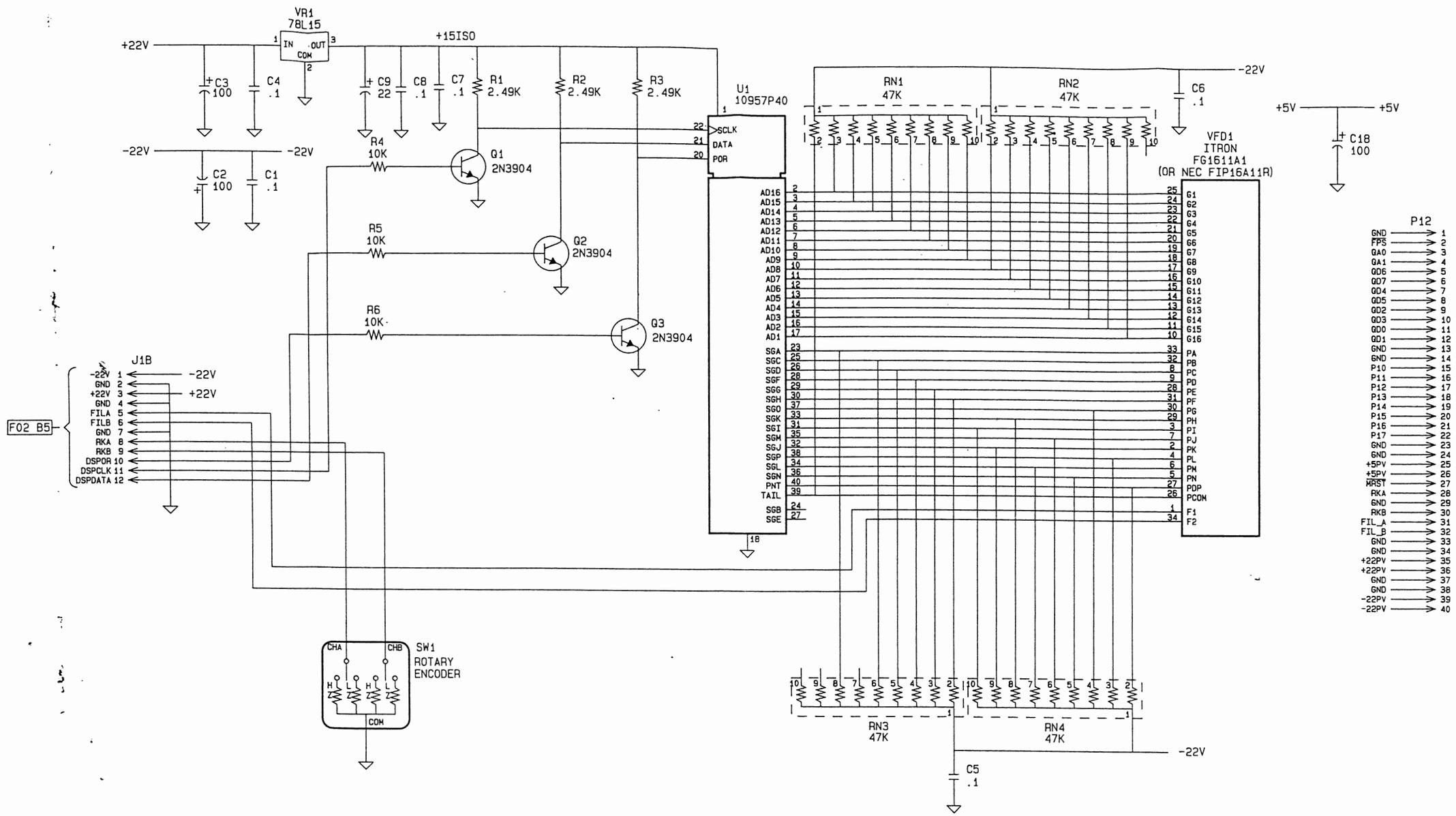

2. ALL CAPACITORS ARE IN MICROFARADS.
1. ALL RESISTORS ARE IN OHMS, 1/8W, 1%, MF.

NOTE: UNLESS OTHERWISE SPECIFIED

REFERENCE DESIGNATORS LAST USED	REFERENCE DESIGNATORS NOT USED
R9, RN10, C19, U7, CR27, Q3, VFD1, VR1, SW1, KB1, J1	

REMOVE ALL BURRS AND BREAK SHARP EDGES
MATERIAL
FINISH WAVETEK PROCESS
DO NOT SCALE DRAWING

DRAWN M. KINGSLEY DATE 1-18-88
CHECKED 3 21 88
PROJ. ENGR. 3 25 88
RELEASE APPROV. 3 25 88

UNLESS OTHERWISE SPECIFIED DIMENSIONS ARE IN INCHES TOLERANCES ARE: FRACTIONS ± DECIMALS .XX ± .XXX ± ANGLES ±

WAVETEK SAN DIEGO • CALIFORNIA

TITLE SCHEMATIC DISPLAY/KEYBOARD

SIZE D | FSCM NO. 23338 | DWG. NO. 0103-00-3001 | REV A

SCALE NONE | MODEL 1288 | SHEET 1 OF 3

0103-00-3001 A

THIS DOCUMENT CONTAINS PROPRIETARY INFORMATION AND DESIGN RIGHTS BELONGING TO WAVETEK AND MAY NOT BE REPRODUCED FOR ANY REASON EXCEPT CALIBRATION, OPERATION, AND MAINTENANCE WITHOUT WRITTEN AUTHORIZATION.

REV	ECN	BY	DATE	APP
A	ERO# 9421	MC	12-88	
B	ECO# 9583	M.C.	4/14/89	
C	ECO.# 9915	MS	5/11/89	

NOTES:

1. COMPONENTS MOUNTED ON COMPONENT SIDE OF PCB SHOWN ON SHEET 1, COMPONENTS MOUNTED ON SOLDER SIDE OF PCB SHOWN ON SHEET 2.

2. RIBBON CABLE IS INSTALLED BETWEEN J1A ON LOWER KEYBOARD PCB AND J1B ON UPPER DISPLAY PCB.

3. LEADS OF COMPONENTS MOUNTED ON COMPONENT SIDE OF PCB OPPOSITE DISPLAY (VFD1), MUST HAVE LEADS TRIMMED TO WITHIN .050 OF PCB SURFACE.

4. MOUNTING OF DISPLAY (VFD1):
   A. INSTALL AND SOLDER COMPONENTS ON COMPONENT SIDE OF PCB.
   B. TRIM LEADS OF COMPONENT ON UPPER BOARD PER NOTE 3.
   C. ATTACH DISPLAY CUSHION (PN: 1400-02-3510) TO DISPLAY, POSITIONING CUSHION SO THAT IT DOES NOT OVERLAP DISPLAY.
   D. PLACE DISPLAY (VFD1) WITH ATTACHED CUSHION ON SOLDER SIDE OF PCB MAKING SURE THAT THE SURFACE OF THE CUSHION IS FLUSH TO THE PCB SURFACE.
      PINS OF COMPONENTS ON OPPOSITE SIDE OF PCB WILL PIERCE THE CUSHION.
   E. ALLOW DISPLAY (VFD1 ON COMPONENT SIDE) TO SELF-LEVEL BEFORE SOLDERING THE PINS OF DISPLAY.

5. LEDS (CR1 THRU CR27) MAY BE MOUNTED FLUSH TO PCB.

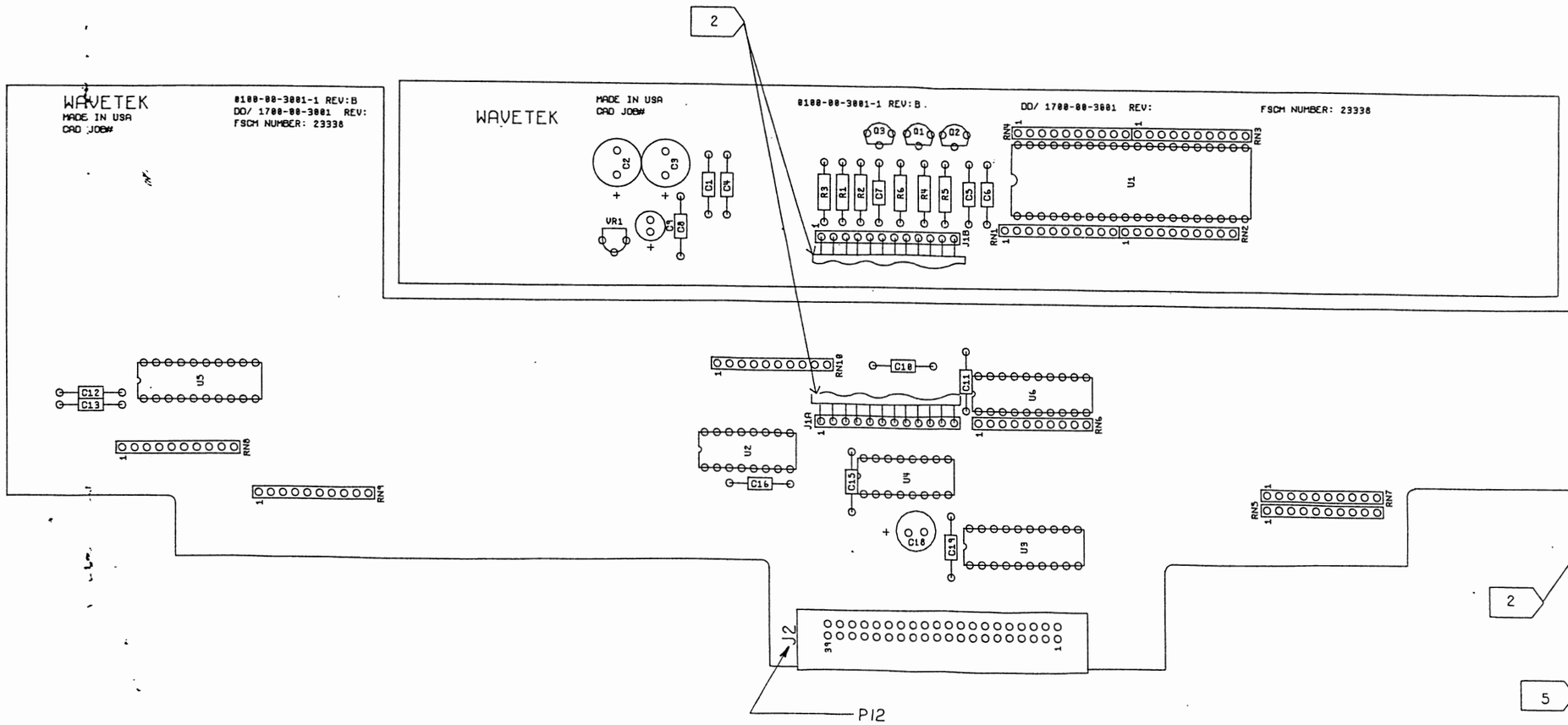

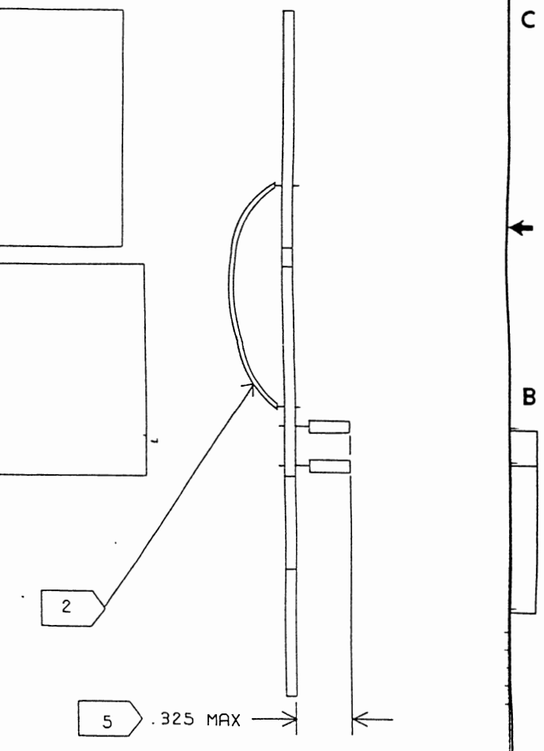

SEE SEPARATE PARTS LIST

NOTE: UNLESS OTHERWISE SPECIFIED

REMOVE ALL BURRS AND BREAK SHARP EDGES	DRAWN WTLIE	DATE 1/88	WAVETEK SAN DIEGO, CALIFORNIA
MATERIAL	PROJ ENGR M. GOLDMAN	1-26-88	TITLE PCB ASSEMBLY - DISPLAY/KEYBOARD
FINISH W.AVETEK PROCESS	RELEASE APPROV.		
	TOLERANCE UNLESS OTHERWISE SPECIFIED XXX ±.010 ANGLES ±1° XX ±.030		
	DO NOT SCALE DWG	MODEL NO 1288	DWG NO 1100-00-3001 REV C
	SCALE NONE	CODE IDENT 23338	SHEET 1 OF 2

THIS DOCUMENT CONTAINS PROPRIETARY INFORMATION AND DESIGN RIGHTS BELONGING TO WAVETEK AND MAY NOT BE REPRODUCED FOR ANY REASON EXCEPT CALIBRATION, OPERATION, AND MAINTENANCE WITHOUT WRITTEN AUTHORIZATION.

REV	ECO	BY	DATE	APP

U4 74ALS138
U5 74ALS574
U6 74ALS574
U7 74ALS574

QA0 F01 D1
QA1 F01 D1
FPS F01 C1
FPREG C8 F03
+5V
C15 .1
C12 .1
C11 .1
C14 .1
C13 .1
C10 .1
C17 .1

600Ω RN8 270 CR4
135Ω RN8 270 CR5
75Ω RN10 270 CR6
BAL RN10 270 CR7
50Ω RN10 270 CR8
ENABLE RN7 270 CR9
REMOTE RN7 270 CR10
UNBAL RN7 270 CR11

AM RN8 270 CR12
CW RN10 270 CR13
SWEEP RN10 270 CR14
FM/VCF RN10 270 CR15
DC RN10 270 CR3
SIN RN7 270 CR17
SQR RN7 270 CR18
TRI RN7 270 CR19

RN10 270 CR20
RN10 270 CR21
RN10 270 CR22
RN10 270 CR23
RN10 270 CR24
RN10 270 CR25
RN10 270 CR26
RN10 270 CR27

MODEL 289 ONLY

F02 B8 QD0
F02 B8 QD1
F02 B8 QD2
F02 B8 QD3
F02 B8 QD4
F02 B8 QD5
F02 B8 QD6
F02 B8 QD7

RN6 10K

NOTE: UNLESS OTHERWISE SPECIFIED

REMOVE ALL BURRS AND BREAK SHARP EDGES	DRAWN M.KINGSLEY	DATE 3-18-88	WAVETEK SAN DIEGO, CALIFORNIA
MATERIAL	CHECKED		TITLE: SCHEMATIC DISPLAY/KEYBOARD
	PROJ. ENGR.		
FINISH WAVETEK PROCESS	RELEASE APPROV.		
DO NOT SCALE DRAWING	UNLESS OTHERWISE SPECIFIED DIMENSIONS ARE IN INCHES TOLERANCES ARE: FRACTIONS DECIMALS ANGLES .XX ± .XXX ± ±		SIZE D · FSCM NO. 23338 · DWG. NO. 0103-00-3001 · REV A · SCALE NONE · MODEL 1288 · SHEET 3 OF 3

0103-00-3001 A

DOCUMENT CONTAINS PROPRIETARY INFORMATION
AND RIGHTS BELONGING TO WAVETEK AND MAY NOT
BE REPRODUCED FOR ANY REASON EXCEPT CALIBRATION,
REPAIR, AND MAINTENANCE WITHOUT WRITTEN AU-
THORIZATION.

REV	ECO	BY	DATE	APP

REFERENCE DESIGNATORS	PART DESCRIPTION	ORIG-MFGR-PART-NO	MFGR	WAVETEK NO.	QTY/PT
NONE	SCHEMATIC, DISPLAY/KEYBOARD	0103-00-3001	WVTK	0103-00-3001	1
NONE	CUSHION, DISPLAY	1400-02-3510	WVTK	1400-02-3510	1
C1 C10 C11 C12 C13 C15 C16 C19 C4 C5 C6 C7 C8	CAP,CER,MON,.1MF,50V, AXIAL	CAC03Z5U104Z050A	CORNC	1500-01-0405	13
C18 C2 C3	CAP,ELECT,100MF,35V RADIAL LEAD,SP .20	NRE101M35V8X11	NIC	1500-31-0102	3
C9	CAP,ELECT,22MF,25V,RA DIAL	SRA25VB22RM6X7LL	UNCON	1500-32-2002	1
NONE	PCB, DISPLAY/KEYBOARD	1700-00-3001	WVTK	1700-00-3001	1
NONE	CONN,HEADER,40 PIN,PCB MT, .1 CTR,2X20,SHRD	1-102692-3	AMP	2100-02-0258	1
VFD1	DISPLAY,VAC,FLOUR	FG1611A1	ITRON	2400-03-0019	1
R4 R5 R6	RES,MF,1/8W,1%,10K	RN55D-1002F	TRW	4701-03-1002	3
R1 R2 R3	RES,MF,1/8W,1%,2.49K	RN55D-2491F	TRW	4701-03-2491	3
RN5 RN6 RN9	RES NETWORK 10K 2% 10PIN SIP BUSS	4310R-101-103	BOURN	4770-00-0008	3
RN1 RN2 RN3 RN4	RES NETWORK 47K 2% 10PIN SIP BUSS	4310R-101-473	BOURN	4770-00-0030	4
RN10 RN7 RN8	RES NETWORK 10PIN SIP 270 OHM BUSS	4310R-101-271	BOURN	4770-00-0053	3

WAVETEK PARTS LIST | TITLE: ASSY, DISPLAY/KEYBOARD | ASSEMBLY NO. 1100-00-3001 | REV C

REFERENCE DESIGNATORS	PART DESCRIPTION	ORIG-MFGR-PART-NO	MFGR	WAVETEK NO.	QTY/PT
CR1 CR9	LED,AMBER,RECT BAR	LTL-3271A	LITE	4899-00-0056	2
CR10 CR11 CR12 CR13 CR14 CR15 CR17 CR18 CR19 CR2 CR3 CR4 CR5 CR6 CR7 CR8	LED,GREEN,RECT BAR	LTL-3231A	LITE	4899-00-0057	16
Q1 Q2 Q3	TRANS 2N3904 NPN GENERAL PURPOSE TO-92	2N3904	FAIR	4901-03-9040	3
SW1	ENCODER, ROTARY, MADE FROM 5104-00-0027	5109-00-0001	WVTK	5109-00-0001	1
J1A	CABLE,FLEX,JMP,ASSY	1-86943-1	AMP	6001-60-0017	1
VR1	VOLT REGULATOR, POSITIVE	78L15	TI	7000-78-1501	1
U2	MUX/DEMUX, ANALOG	CD4051BE	RCA	8000-40-5100	1
U1	CONTROLLER,ALPH NUM DISP,40V	10957P-50	ROCK	8001-09-5700	1
U4	DECODER/DEMUX, 3 TO 8 LINE	SN74ALS138N	TI	8007-41-3800	1
U3 U5 U6	FLIP-FLOP, OCTAL D	SN74ALS574N	TI	8007-45-7450	3

WAVETEK PARTS LIST | TITLE: ASSY, DISPLAY/KEYBOARD | ASSEMBLY NO. 1100-00-3001 | REV C

NOTE: UNLESS OTHERWISE SPECIFIED

REMOVE ALL BURRS AND BREAK SHARP EDGES	DRAWN	DATE	WAVETEK SAN DIEGO, CALIFORNIA
MATERIAL	CHECKED		TITLE: PARTS LIST DISPLAY/KEYBOARD
	PROJ. ENGR.		
	RELEASE APPROV.		
FINISH WAVETEK PROCESS	UNLESS OTHERWISE SPECIFIED DIMENSIONS ARE IN INCHES TOLERANCES ARE: FRACTIONS ± DECIMALS .XX ± .XXX ± ANGLES ±		SIZE D | FSCM NO. 23338 | DWG. NO. 1100-00-3001 | REV C
DO NOT SCALE DRAWING			SCALE | MODEL 288 | SHEET 1 OF 1

THIS DOCUMENT CONTAINS PROPRIETARY INFORMATION AND DESIGN RIGHTS BELONGING TO WAVETEK AND MAY NOT BE REPRODUCED FOR ANY REASON EXCEPT CALIBRATION, OPERATION, AND MAINTENANCE WITHOUT WRITTEN AUTHORIZATION.

REV	ECN	BY	DATE	APP

SEE SHEET #1

DISPLAY CUSHION
(PN: 1400-02-3510)

4

4

AMBER LED

3

0100-00-3001-2 REV:B

VFD1

SW1

CR9

0100-00-3001-2 REV:B

CR17
CR1
CR19
CR2
CR18
CR3
CR14
CR13
CR12
CR15
CR10
CR8
CR6
CR5
CR4
CR7
CR11

AMBER LED

A A

WIDE PIN THIS SIDE

THIS PIN LONGER PRIOR TO TRIM

VIEW A-A

18 PLACES

SOLDER SIDE

NOTE: UNLESS OTHERWISE SPECIFIED

BISHOP GRAPHICS/ACCUPRESS REORDER NO. A27086

REMOVE ALL BURRS AND BREAK SHARP EDGES	DRAWN MYLIE	DATE 1/86	WAVETEK SAN DIEGO • CALIFORNIA
MATERIAL	PROJ ENGR		TITLE PCB ASSEMBLY - DISPLAY/KEYBOARD
FINISH WAVETEK PROCESS	RELEASE APPROV [signature] 1/24/98		
	TOLERANCE UNLESS OTHERWISE SPECIFIED .XXX ±.010 ANGLES ±1° .XX ±.030		
	DO NOT SCALE DWG	MODEL NO 1288	DWG NO 1100-00-3001 REV C
	SCALE NONE	CODE IDENT 23338	SHEET 2 OF 2

DOCUMENT CONTAINS PROPRIETARY INFORMATION
THROUGH RIGHTS BELONGING TO WAVETEK AND MAY NOT
BE REPRODUCED FOR ANY REASON EXCEPT CALIBRATION,
OPERATION, AND MAINTENANCE WITHOUT WRITTEN AU-
THORIZATION.

REV	ECO	BY	DATE	APP

SEE SHT. 1 OF 7

FUNCTION SELECTOR

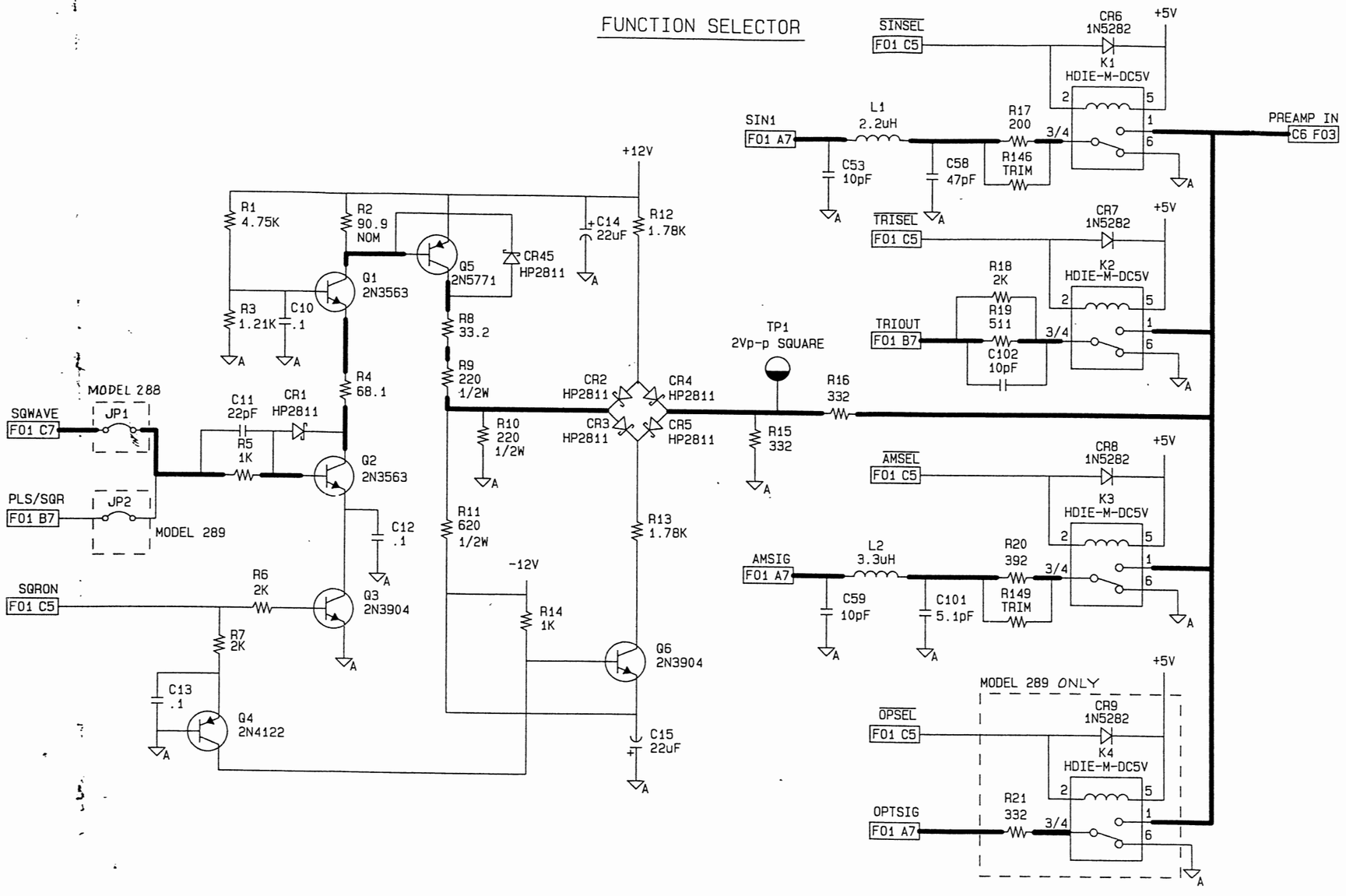

NOTE: UNLESS OTHERWISE SPECIFIED

REMOVE ALL BURRS AND BREAK SHARP EDGES	DRAWN M.KINGSLEY	DATE 1-10-88	WAVETEK SAN DIEGO, CALIFORNIA
MATERIAL	CHECKED		TITLE: SCHEMATIC OUTPUT BOARD
	PROJ. ENGR.		
FINISH WAVETEK PROCESS	RELEASE APPROV.		
DO NOT SCALE DRAWING	UNLESS OTHERWISE SPECIFIED DIMENSIONS ARE IN INCHES TOLERANCES ARE: FRACTIONS ± DECIMALS .XX ± .XXX ± ANGLES ±		SIZE D · FSCM NO. 23338 · DWG. NO. 0103-00-3002 · REV D · SCALE NONE · MODEL 1288 · SHEET 2 OF 7

0103-00-3002 D

THIS DOCUMENT CONTAINS PROPRIETARY INFORMATION AND DESIGN RIGHTS BELONGING TO WAVETEK AND MAY NOT BE REPRODUCED FOR ANY REASON EXCEPT CALIBRATION, OPERATION, AND MAINTENANCE WITHOUT WRITTEN AUTHORIZATION.

REV	ECO	BY	DATE	APP
A	ERO 9896	MA	3.17.88	LSJ
B	ECO # 9866	MS	10.4.88	LBJ
C	ECO 89-002	BG	3.3.89	KA
D	ECO#89-162	MS	9/12/89	KA

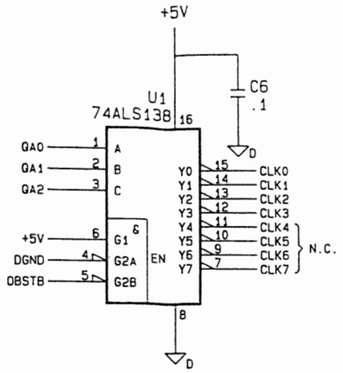

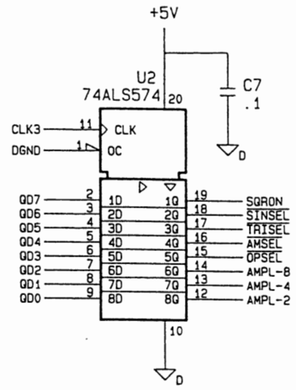

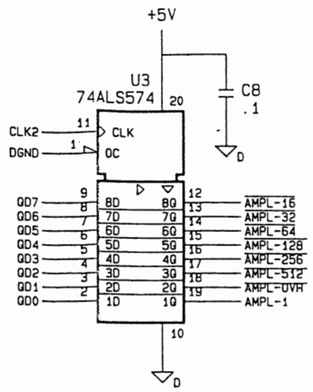

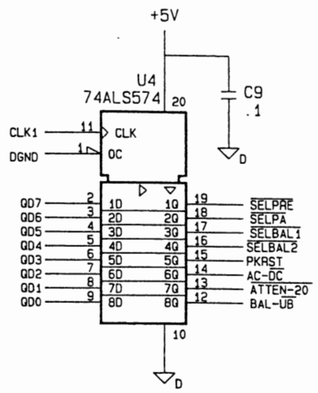

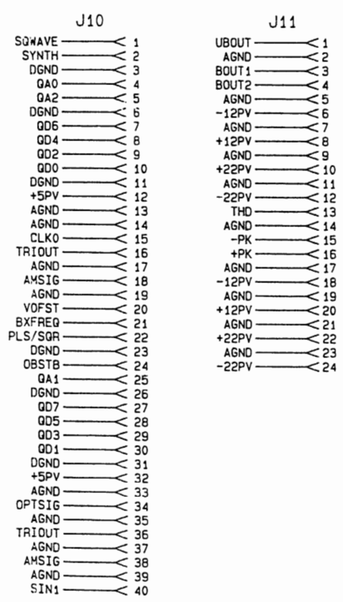

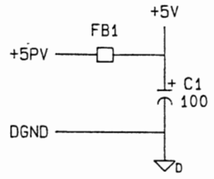

4. ⏚A ANALOG GROUND SYMBOL.
3. ⏚D DIGITAL GROUND SYMBOL.
2. ALL CAPACITORS ARE IN MICROFARADS.
1. ALL RESISTORS ARE IN OHMS, 1/8W, 1%, MF.

NOTE: UNLESS OTHERWISE SPECIFIED

REFERENCE DESIGNATORS LAST USED	REFERENCE DESIGNATORS NOT USED
R206, C106, CR45, Q25, K14, U11, TP10, FB5	R88, R89, , R92, R93, R150-R199, , C21, C94-C100, CR23, CR27

REMOVE ALL BURRS AND BREAK SHARP EDGES
MATERIAL
FINISH: WAVETEK PROCESS
DO NOT SCALE DRAWING

DRAWN M. KINGSLEY 1-18-88
CHECKED 3/25/88
PROJ. ENGR. 3/25/88
RELEASE APPROV. 3/25/88

UNLESS OTHERWISE SPECIFIED DIMENSIONS ARE IN INCHES
TOLERANCES ARE:
FRACTIONS ± DECIMALS .XX ± .XXX ± ANGLES ±

WAVETEK SAN DIEGO, CALIFORNIA

TITLE
SCHEMATIC
OUTPUT BOARD

SIZE	FSCM NO.	DWG. NO.	REV
D	23338	0103-00-3002	D

SCALE NONE | MODEL 1288 | SHEET 1 OF 7

0103-00-3002 D

DOCUMENT CONTAINS PROPRIETARY INFORMATION
ESIGN RIGHTS BELONGING TO WAVETEK AND MAY NOT
P RODUCED FOR ANY REASON EXCEPT CALIBRATION,
ATION, AND MAINTENANCE WITHOUT WRITTEN AU-
ZATION.

REV	ECO	BY	DATE	APP

SEE SHT. 1 OF 7

R-R2 LADDER

C105 5pf
C106 2.7pf

R38 14.3K
R39 14.3K
R41 28.7K
R42 28.7K
R44 57.6K
R45 57.6K
R47 110K
R48 124K

AMPL-8 F01 C5 — R37 2.49K — C28 .1
AMPL-4 F01 C5 — R40 2.49K — C29 .1
AMPL-2 F01 C5 — R43 2.49K — C30 .1
AMPL-1 F01 C4 — R46 2.49K — C31 .1

U6A DG211 (+5V, +12V, -12V)
U6D
U6B
U6C

TP3 ACOM

PA IN B8 F05

R51 450 .1%
R52 450 .1%
R54 226
R56 226
R58 226
R60 226

AMPL-OVR	AMPL-512	AMPL-256	AMPL-128	AMPL-64	AMPL-32	AMPL-16
C32 .1	C34 .1	C35 .1	C36 .1	C37 .1	C38 .1	C39 .1
CR14 1N5282	CR15 1N5282	CR16 1N5282	CR17 1N5282	CR18 1N5282	CR19 1N5282	CR20 1N5282
K5 HD1E-M-DC5V	K6 HD1E-M-DC5V	K7 HD1E-M-DC5V	K8 HD1E-M-DC5V	K9 HD1E-M-DC5V	K10 HD1E-M-DC5V	K11 HD1E-M-DC5V
C33 4.7	R50 450 .1%	R53 450 .1%	R55 453	R57 453	R59 453	R61 453

TP2 PREOUT
PREAMP F07 D8
R49 450 .1%
R62 453

NOTE: UNLESS OTHERWISE SPECIFIED

REMOVE ALL BURRS AND BREAK SHARP EDGES	DRAWN M.KINGSLEY	DATE 3-18-88	WAVETEK SAN DIEGO, CALIFORNIA
MATERIAL	CHECKED		TITLE: SCHEMATIC OUTPUT BOARD
	PROJ. ENGR.		
	RELEASE APPROV.		
FINISH WAVETEK PROCESS	UNLESS OTHERWISE SPECIFIED DIMENSIONS ARE IN INCHES TOLERANCES ARE: FRACTIONS DECIMALS ANGLES ± XX ± XXX ± ±		SIZE D · FSCM NO. 23338 · DWG. NO. 0103-00-3002 · REV D
DO NOT SCALE DRAWING			SCALE NONE · MODEL 1288 · SHEET 4 OF 7

0103-00-3002 D

THIS DOCUMENT CONTAINS PROPRIETARY INFORMATION AND DESIGN RIGHTS BELONGING TO WAVETEK AND MAY NOT BE REPRODUCED FOR ANY REASON EXCEPT CALIBRATION, OPERATION, AND MAINTENANCE WITHOUT WRITTEN AUTHORIZATION.

REV	ECO	BY	DATE	APP

SEE SHT. 1 OF 7

PREAMPLIFIER

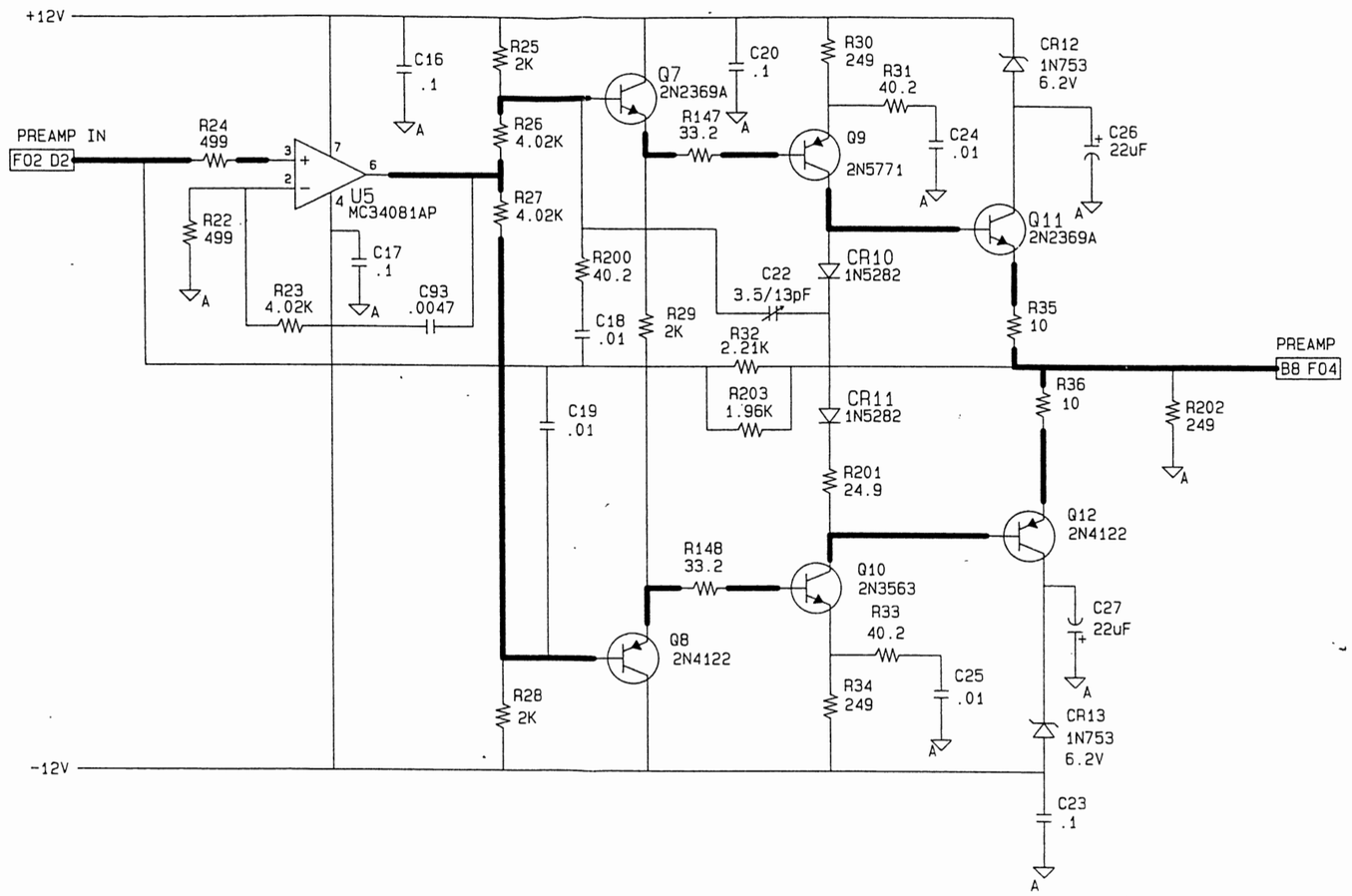

0103-00-3002 D

NOTE. UNLESS OTHERWISE SPECIFIED

REMOVE ALL BURRS AND BREAK SHARP EDGES	DRAWN M.KINGSLEY	DATE 1-19-88	WAVETEK SAN DIEGO, CALIFORNIA
MATERIAL	CHECKED		TITLE: SCHEMATIC OUTPUT BOARD
	PROJ. ENGR.		
	RELEASE APPROV.		
FINISH WAVETEK PROCESS	UNLESS OTHERWISE SPECIFIED DIMENSIONS ARE IN INCHES TOLERANCES ARE: FRACTIONS DECIMALS ANGLES ± XX ± XXX ± ±		SIZE D | FSCM NO. 23338 | DWG. NO. 0103-00-3002 | REV D
DO NOT SCALE DRAWING			SCALE NONE | MODEL 1288 | SHEET 3 OF 7

DOCUMENT CONTAINS PROPRIETARY INFORMATION
RIGHTS BELONGING TO WAVETEK AND MAY NOT
PRODUCED FOR ANY REASON EXCEPT CALIBRATION,
TION, AND MAINTENANCE WITHOUT WRITTEN AU-
ATION.

REV	ECO	BY	DATE	APP

SEE SHT. 1 OF 7

-20dB ATTENUATOR

PA OUT
F05 B1

R 206
4.99 K, 1/8 W

R108
100, 1W, .25%

R109
100, 1W, .25%

K12
DF2E-DC5V

R110
41.2K

R111
4.75K

R112
61.9, 1W, .1%

R113
249, 1/4W
.1%

R114
61.9, 1W, .1%

R115
4.75K

+5V

CR32
1N5282

ATTN-20
F01 C3

BALANCED DRIVERS

K13
HD1E-M-DC5V

+5V

CR33
1N5282

UBOUT
C7 F01

BOUT2
C8 F07

BAL_$\overline{UB}$
C3 F01

R116B
*

R116C
*

R116D
*

R116A
*

U7
HA2542

C70
.1

C71
15pf

C72
.1

C73
15pF

TP6
-BAL

CR34
1N5282

CR35
1N5282

+12V

-12V

* RESISTOR NETWORK R116 1K, 2W.

BOUT1
C8 F07

R116E
*

R116F
*

R116G
*

R116H
*

U8
HA2542

C74
.1

C75
36pf
NOM

C76
.1

C77
15pF

TP7
+BAL

CR36
1N5282

CR37
1N5282

R117
100, 1W
.25%

R118
100, 1W
.25%

R119
12.1

R120
12.1

R121
12.1

NOTE: UNLESS OTHERWISE SPECIFIED

REMOVE ALL BURRS AND BREAK SHARP EDGES	DRAWN M. KINGSLEY	DATE 1-18-8[illegible]	WAVETEK SAN DIEGO, CALIFORNIA
MATERIAL	CHECKED		TITLE: SCHEMATIC OUTPUT BOARD
	PROJ. ENGR.		
FINISH WAVETEK PROCESS	RELEASE APPROV.		
DO NOT SCALE DRAWING	UNLESS OTHERWISE SPECIFIED DIMENSIONS ARE IN INCHES TOLERANCES ARE: FRACTIONS ± DECIMALS .XX ± .XXX ± ANGLES ±		SIZE D · FSCM NO. 23338 · DWG. NO. 0103-00-3002 · REV D · SCALE NONE · MODEL 1268 · SHEET 6 OF 7

0103-00-3002 D

THIS DOCUMENT CONTAINS PROPRIETARY INFORMATION AND DESIGN RIGHTS BELONGING TO WAVETEK AND MAY NOT BE REPRODUCED FOR ANY REASON EXCEPT CALIBRATION, OPERATION, AND MAINTENANCE WITHOUT WRITTEN AUTHORIZATION.

POWER AMP

SEE SHT. 1 OF 7

REV	ECO	BY	DATE	APP

+12V
C42 .1
R63 499
R64 499
CR21 1N5282
Q13 2N4122
C40 22pF
Q14A MP312
Q14B
R65 499
R67 49.9
R68 49.9
C41 .1
R66 2.49K
-12V
R69 249
Q15 2N2219A
R75 33.2
CR22 1N753A
C44 .01
R70 499
R71 499
R72 499
C43 .01
R73 499
R74 499
PA IN F05 D1
VOFST F01 B7
R76 100
C45 .01
R77 1.5K
R78 33.2
C52 .1
C49 .01
R87 150
Q16 2N3563
C54 1.5pF
C46 .01
R79 1K 1/2W 5%
C50 .01
R85 39.2
R86 15
C57 .1
Q18 2N5160
CR24 1N5282
CR28 1N5282
C56 .1
R90 1.5K, 1/4W
R145 1.5K, 1/4W
C47 .01
R80 23.7K
R81 1K 1/2W 5%
CR25 1N5282
R91 10
CR26 1N5282
CR29 1N5282
R98 10
R99 10
Q19 2N3725
Q17 2N5771
R82 1K
C48 .01
C51 .01
R84 33.2
R83 100
R94 15
C60 .1
C68 .1
R95 39.2
C55 .1
C61 .1
DASH LINES INDICATE TRANSISTORS, INCLUDING HEATSINK, TRANSIPAD AND SHIELD.
+22V
R100 10 1/2W
R101 10 1/2W
C62 10
C63 .1
C64 .01
C65 10
R96 10
R97 10
Q21 2N3725
Q20 2N3725
R102 10 1/2W
R103 10 1/2W
TP4 PA OUT
+22V
CR30 1N5282
PA OUT C8 F06
R104 10 1/2W
R105 10 1/2W
TP5 ACOM
CR31 1N5282
-22V
Q22 2N5160
Q23 2N5160
C66 10
C67 .01
R106 10 1/2W
R107 10 1/2W
C69 10
-22V

NOTE: UNLESS OTHERWISE SPECIFIED

REMOVE ALL BURRS AND BREAK SHARP EDGES	DRAWN M.KINGSLEY	DATE 1-18-88	WAVETEK SAN DIEGO, CALIFORNIA
MATERIAL	CHECKED		TITLE: SCHEMATIC OUTPUT BOARD
	PROJ. ENGR.		
	RELEASE APPROV.		
FINISH WAVETEK PROCESS	UNLESS OTHERWISE SPECIFIED DIMENSIONS ARE IN INCHES TOLERANCES ARE: FRACTIONS ± DECIMALS .XX ± .XXX ± ANGLES ±		SIZE D · FSCM NO. 23338 · DWG. NO. 0103-00-3002 · REV D
DO NOT SCALE DRAWING			SCALE NONE · MODEL 1288 · SHEET 5 OF 7

0103-00-3002 D

DOCUMENT CONTAINS PROPRIETARY INFORMATION DESIGN RIGHTS BELONGING TO WAVETEK AND MAY NOT BE PRODUCED FOR ANY REASON EXCEPT CALIBRATION, INSTALLATION, AND MAINTENANCE WITHOUT WRITTEN AUTHORIZATION.

REV	ECO	BY	DATE	APP
A03	0041	MK	3-1-[illegible]	MG
B	ERO 9700 RERELEASE ONLY NO CHANGE FROM A03	MK	4/11/88	MG FOR DEF 4-21-88
C	ECO 9705	MK	5-13-88	
D	ECO 9770	MK	5-27-88	
E	ECO # 9842	MG	8/10/88	
F	ECO # 9866	MS	10/4/88	
G	ECO 89-002	BG	3/3/89	KA
H	ECO # 89-162	MS	3/28/89	

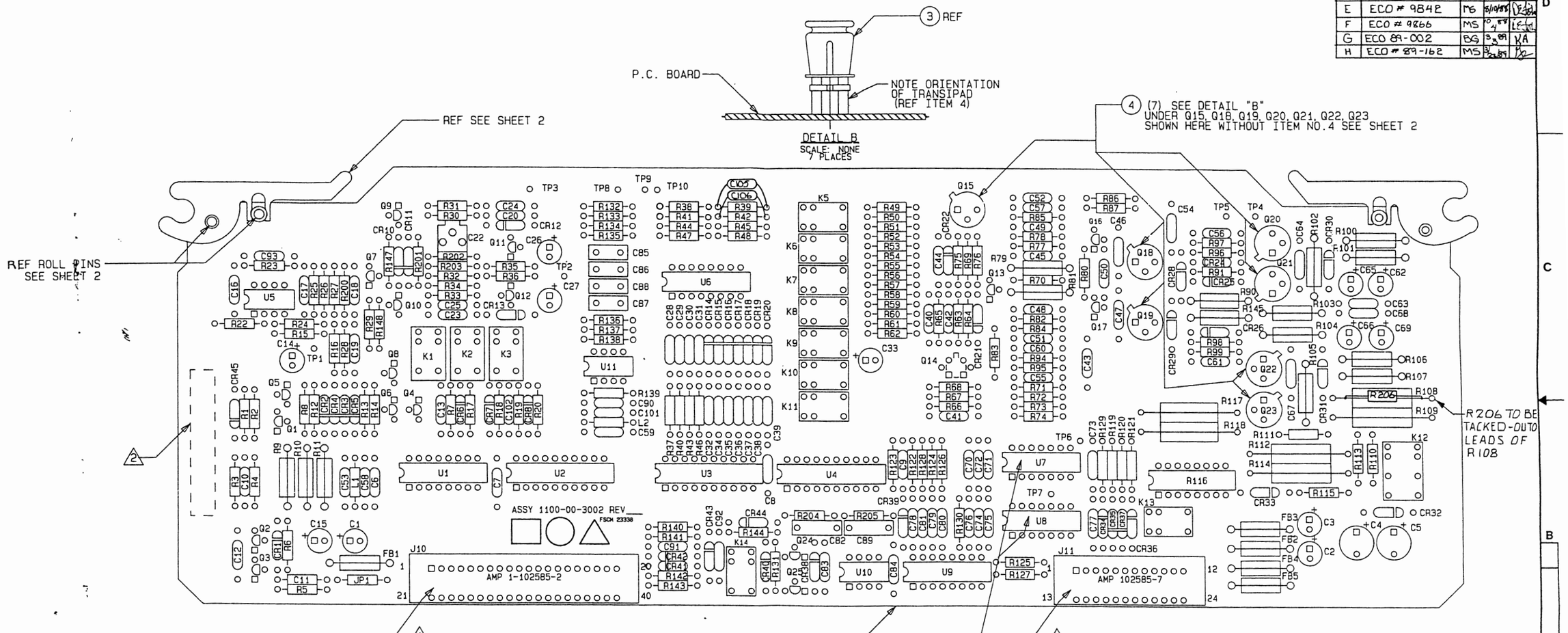

2 INSTALL SERIAL NO. LABEL APPROXIMATE WHERE SHOWN

1 MANUFACTURERS MARKINGS INDICATES CORRECT ORIENTATION OF CONNECTOR

NOTE: UNLESS OTHERWISE SPECIFIED

REMOVE ALL BURRS AND BREAK SHARP EDGES	DRAWN M. KINGSLEY	DATE 5-13-88	WAVETEK SAN DIEGO, CALIFORNIA
MATERIAL	CHECKED	4-21-88	TITLE: ASSEMBLY OUTPUT BOARD
	PROJ. ENGR.	5-17-88	
FINISH WAVETEK PROCESS	RELEASE APPR. RBG	5-18-88	
DO NOT SCALE DRAWING	UNLESS OTHERWISE SPECIFIED DIMENSIONS ARE IN INCHES TOLERANCES ARE: FRACTIONS ± DECIMALS XX ± .020 XXX ± .010 ANGLES ±1°		SIZE D; FSCM NO. 23338; DWG. NO. 1100-00-3002; REV H; SCALE 2:1; MODEL 1288; SHEET 1 OF 2

THIS DOCUMENT CONTAINS PROPRIETARY INFORMATION AND DESIGN RIGHTS BELONGING TO WAVETEK AND MAY NOT BE REPRODUCED FOR ANY REASON EXCEPT CALIBRATION, OPERATION, AND MAINTENANCE WITHOUT WRITTEN AUTHORIZATION.

REV	ECO	BY	DATE	APP

SEE SHT. 1 OF 7

PEAK DETECTOR

SELPRE F01 C3
PREAMP F04 B8
SELBAL1 F01 C3
BOUT1 F06 B2
SELBAL2 F01 C3
BOUT2 F06 D2
SELPA F01 C3
PAOUT F05 B1

R122 2.49K
R123 1K
R124 2.49K
R125 1K
R126 2.49K
R127 1K
R128 2.49K
R129 2K, .1%
R130 1K, .1%

C78 .1
C79 .1
C80 .1
C81 .1

+5V
+12V
-12V

U9 DG-211

PKRST F03 C3

R204 10M
CR38 1N5282
C82 .1
C83 .1
U10A 4 MC34082P
C84 .1

R131 10K
Q24 2N3904
Q25 2N4122

K14 HD1E-M-DC5V
CR40 1N5282

TP9 +PK
+PK B7 F01
AC- $\overline{DC}$ C3 F01
TP10 -PK
-PK B7 F01

C89 .1
R205 10M
CR39 1N5282
U10B

C85 910pF, 1%
C87 910pF, 1%
R134 17.8K
R135 17.8K
R132 6.19K
R133 17.8K
R136 17.8K
C86 910pF 1%
C88 910pF 1%

C90 1.5pF
R139 499K
R137 6.19K
R138 43.2K
U11 MC34081P
R140 28.7K
R141 4.99K
C91 .1

R142 16.5K
R143 1K
CR41 1N5282
CR42 1N5282
CR43 1N5282
CR44 1N751A
R144 47.5K
C92 .1
TP8 THD
THD B6 F01

NOTE: UNLESS OTHERWISE SPECIFIED

REMOVE ALL BURRS AND BREAK SHARP EDGES	DRAWN M.KINGSLEY	DATE 3-18-88	WAVETEK SAN DIEGO, CALIFORNIA
MATERIAL	CHECKED		TITLE: SCHEMATIC OUTPUT BOARD
	PROJ. ENGR.		
	RELEASE APPROV.		
FINISH WAVETEK PROCESS	UNLESS OTHERWISE SPECIFIED DIMENSIONS ARE IN INCHES TOLERANCES ARE: FRACTIONS DECIMALS ANGLES ± XX ± .XXX ± ±		SIZE D · FSCM NO. 23338 · DWG. NO. 0103-00-3002 · REV D
DO NOT SCALE DRAWING			SCALE NONE · MODEL 1288 · SHEET 7 OF 7

0103-00-3002 D

DOCUMENT CONTAINS PROPRIETARY INFORMATION
DESIGN RIGHTS BELONGING TO WAVETEK AND MAY NOT
BE REPRODUCED FOR ANY REASON EXCEPT CALIBRATION,
OPERATION, AND MAINTENANCE WITHOUT WRITTEN AU-
THORIZATION.

REV	ECO	BY	DATE	APP

REFERENCE DESIGNATORS	PART DESCRIPTION	ORIG-MFGR-PART-NO	MFGR	WAVETEK NO.	QTY/PT
NONE	SCHEMATIC, OUTPUT PCB	0103-00-3002	WVTK	0103-00-3002	1
NONE	PCA SUB ASSY, OUTPUT BD 1288/288			1208-00-3002	1
9	SHIELD, OUTPUT BOARD	1400-02-3403	WVTK	1400-02-3403	1
6	HEATSINK, OUTPUT BOARD	1400-02-3413	WVTK	1400-02-3413	1
5	THERMAL GASKET-OUTPUT	1400-02-4420	WVTK	1400-02-4420	2
2	PC BD EJECTOR	87-2-C	BRIT	2800-07-0032	2
8	WASHER	5607-43	SEAST	2800-11-0015	6
11	SCREW, 4-40X3/16, PHP, NYLOK PATCH	4-40 X 3/16	CMRCL	2800-23-4103	1
12	WASHER, LOCK REG. S/S #4	MS 35338-135	CMRCL	2800-45-4000	7
7	SCREW, 4-40X3/8 PHP, NYLOK PATCH, Z	4-40 X 3/8 PH, SL	CMRCL	2800-56-9106	6

WAVETEK PARTS LIST | TITLE: ASSY, OUTPUT BOARD | ASSEMBLY NO. 1100-00-3002 | REV H

REFERENCE DESIGNATORS	PART DESCRIPTION	ORIG-MFGR-PART-NO	MFGR	WAVETEK NO.	QTY/PT
CR12 CR13 CR22	SL ZR 6.2V 5% 400MW (1N753A)	1N753A	ROHM	131.9620	3
L1	L: FXD 2.2 UHY +/-10% SHLD	1641-222	DELVN	150.9220	1
C105	CAP, CER DISK, 5PF, 1KV, 10%	0311-00018	WVTK	1500-00-5011	1
C102 C53 C59	CAP, CER, 10PF, 100V, AXIAL	CAC02CD0100J100A	CORNQ	1500-01-0006	3
C18 C19 C24 C25 C43 C44 C45 C46 C47 C48 C49 C50 C51 C64 C67	CAP CER MON .01MF 50V, AXIAL	CAC02Z5U103Z100A	CORNQ	1500-01-0310	15
C10 C12 C13 C16 C17 C20 C23 C28 C29 C30 C31 C32 C34 C35 C36 C37 C38 C39 C41 C42 C52 C55 C56 C57 C6 C60 C61 C63 C68 C7 C70 C72 C74 C76 C78 C79 C8 C80 C81 C83 C84 C9 C91 C92	CAP, CER, MON, .1MF, 50V, AXIAL	CAC03Z5U104Z050A	CORNQ	1500-01-0405	44
C71 C73 C77	CAP, CER, 15PF, 100V, AXIAL	CAC02CD0150J100A	CORNQ	1500-01-5006	3
C54 C90	CAP, CER, 1.5PF, 100V, AXIAL	CAC02CD01R5J100A	CORNQ	1500-01-5906	2
C11 C40	CAP, CER, 22PF, 100V, AXIAL	CAC02CD0220J100A	CORNQ	1500-02-2006	2

WAVETEK PARTS LIST | TITLE: PCA SUB ASSY, OUTPUT BD 1288/288 | ASSEMBLY NO. 1208-00-3002 | REV

REFERENCE DESIGNATORS	PART DESCRIPTION	ORIG-MFGR-PART-NO	MFGR	WAVETEK NO.	QTY/PT
	V, RADIAL				
C22	CAP, VAR, 3.5-13PF250V	300448-411	STCO	1500-51-3010	1
1	PCB, OUTPUT BD	1700-00-3002	WVTK	1700-00-3002	1
L2	CHOKE, 3.3MH, 10%	1537-24	DLVAN	1800-00-0006	1
P11	CONN, HEADER, 24 PIN, RECPT, 2X12, .1 CTR, PCMT	102585-7	AMP	2100-02-0255	1
P10	CONN, HEADER, 40 PIN, RECPT, 2X20, .1 CTR PCMT	1-102585-2	AMP	2100-02-0256	1
TP3 TP5	TEST POINT, BLK, PC	TP-104-01-00	COMPO	2100-04-0054	2
TP1 TP10 TP2 TP4 TP6 TP7 TP8 TP9	TEST POINT, RED, PC	TP-104-01-02	COMPO	2100-04-0055	8
4	TRANSIPAD	531-218	BIVAR	2800-11-0004	7
NONE	HEATSINK, TO5, EPOXY INS	260-4T5E	WAKE	2800-11-0031	7
10	HEATSINK, 14-16 PIN DIP, ALUM, BLK AN, CLIPON	5802B	AAVID	2800-11-0034	2
11	SCREW, 4-40X3/16, PHP, NYLOK PATCH	4-40 X 3/16	CMRCL	2800-23-4103	6

WAVETEK PARTS LIST | TITLE: PCA SUB ASSY, OUTPUT BD 1288/288 | ASSEMBLY NO. 1208-00-3002 | REV

REFERENCE DESIGNATORS	PART DESCRIPTION	ORIG-MFGR-PART-NO	MFGR	WAVETEK NO.	QTY/PT
C106	CAP CER MON 2.7PF 50V	CCD2R7DNPO	ARCO	1500-02-7505	1
C75	CAP, CER, 36PF, 200V, +/-5%, AX	CAC02CD0360J100A	AVX	1500-03-6001	1
C38	CAP, CER, 47PF, 100V, AXIAL	CAC02CD0470J100A	CORNQ	1500-04-7006	1
C101	CAP, CER, 5.1PF, 100V, AXIAL	CAC02CD05R1J100A	CORNQ	1500-05-1906	1
C85 C86 C87 C88	CAP, MICA, 910PF, 100V, 1%, RADIAL	DM15-911F	ARCO	1500-19-1101	4
C62 C65 C66 C69	CAP, ELECT, 10MF/25V RADIAL LEAD, SP .10	NRE 10/63	NIC	1500-31-0002	4
C4 C5	CAP, ELECT, 100MF, 35V RADIAL LEAD, SP .20	NRE101M35V8X11	NIC	1500-31-0102	2
C1 C2 C3	CAP, ELECT, 100MF/16V RADIAL LEAD, SP .20	NRE101M16V6.3X11	NIC	1500-31-0111	3
C14 C15 C26 C27	CAP, ELECT, 22MF, 25V, RADIAL	SKA25VB22RM6X7LL	UNCON	1500-32-2002	4
C33	CAP, ELECT, 4.7MF/50V RADIAL LEAD, SP .10	ECEA1HV4R7SC	PANAS	1500-34-7903	1
C82 C89	CAP, MET POLY, .1PP, 160V	171-104J160D	WEST	1500-41-0434	2
C93	CAP, MYLAR, .0047MF, 100	225P47291WD3	SPRAG	1500-44-7204	1

WAVETEK PARTS LIST | TITLE: PCA SUB ASSY, OUTPUT BD 1288/288 | ASSEMBLY NO. 1208-00-3002 | REV

REFERENCE DESIGNATORS	PART DESCRIPTION	ORIG-MFGR-PART-NO	MFGR	WAVETEK NO.	QTY/PT
FB1 FB2 FB3 FB4 FB5	BALUN CORE, FERRITE, 680 OHMS	2943666671	FARIT	3100-00-0017	5
K12	RELAY, 2 FORMC, 5V, DIP 14	DF2E-DC5V	AROMT	4500-00-0033	1
K1 K10 K11 K13 K14 K2 K3 K5 K6 K7 K8 K9	RELAY, 1 FORMC, 5V, .312H, .296W	HD1E-M-DC5V	AROMT	4500-00-0034	12
R100 R101 R102 R103 R104 R105 R106 R107	RES, C, 1/2W, 5%, 10	RC-1/2-100J	STKPL	4700-25-0100	8
R10 R9	RES, C, 1/2W, 5%, 220	RC-1/2-221J	STKPL	4700-25-2200	2
R11	RES, C, 1/2W, 5%, 620	RC-1/2-621J	STKPL	4700-25-6200	1
R130	RES, MF, 1/8W, .1%, 1K	RN55E-1001B	MEPCO	4701-02-1001	1
R129	RES, MF, 1/8W, .1%, 2K	RN55E-2001B	MEPCO	4701-02-2001	1
R49 R50 R51 R52 R53	RES, MF, 1/8W, .1%, 450	RNC55E4500BJ	MEPCO	4701-02-4500	5
R76 R83	RES, MF, 1/8W, 1%, 100	RN55D-1000F	TRW	4701-03-1000	2
R123 R125 R127 R14 R143 R5 R82	RES, MF, 1/8W, 1%, 1K	RN55D-1001F	TRW	4701-03-1001	7
R131	RES, MF, 1/8W, 1%, 10K	RN55D-1002F	TRW	4701-03-1002	1
R204 R205	RES, MF, 1/8W, 10M	5033YD10M000F	MEPCO	4701-03-1005	2
R35 R36 R91 R96 R97 R98 R99	RES, MF, 1/8W, 1%, 10	5043ED10R100F	MEPCO	4701-03-1009	7

WAVETEK PARTS LIST | TITLE: PCA SUB ASSY, OUTPUT BD 1288/288 | ASSEMBLY NO. 1208-00-3002 | REV

NOTE, UNLESS OTHERWISE SPECIFIED

REMOVE ALL BURRS AND BREAK SHARP EDGES	DRAWN	DATE	WAVETEK SAN DIEGO, CALIFORNIA
MATERIAL	CHECKED		TITLE: PARTS LIST OUTPUT BOARD
	PROJ. ENGR.		
	RELEASE APPROV.		
FINISH WAVETEK PROCESS	UNLESS OTHERWISE SPECIFIED DIMENSIONS ARE IN INCHES TOLERANCES ARE: FRACTIONS ± DECIMALS .XX ± .XXX ± ANGLES ±		SIZE D | FSCM NO. 23338 | DWG. NO. 1100-00-3002 | REV H
DO NOT SCALE DRAWING			SCALE | MODEL 288 | SHEET 1 OF 2

THIS DOCUMENT CONTAINS PROPRIETARY INFORMATION AND DESIGN RIGHTS BELONGING TO WAVETEK AND MAY NOT BE REPRODUCED FOR ANY REASON EXCEPT CALIBRATION, OPERATION, AND MAINTENANCE WITHOUT WRITTEN AUTHORIZATION.

REV	ECN	BY	DATE	APP

SEE SHT. 1 OF 2

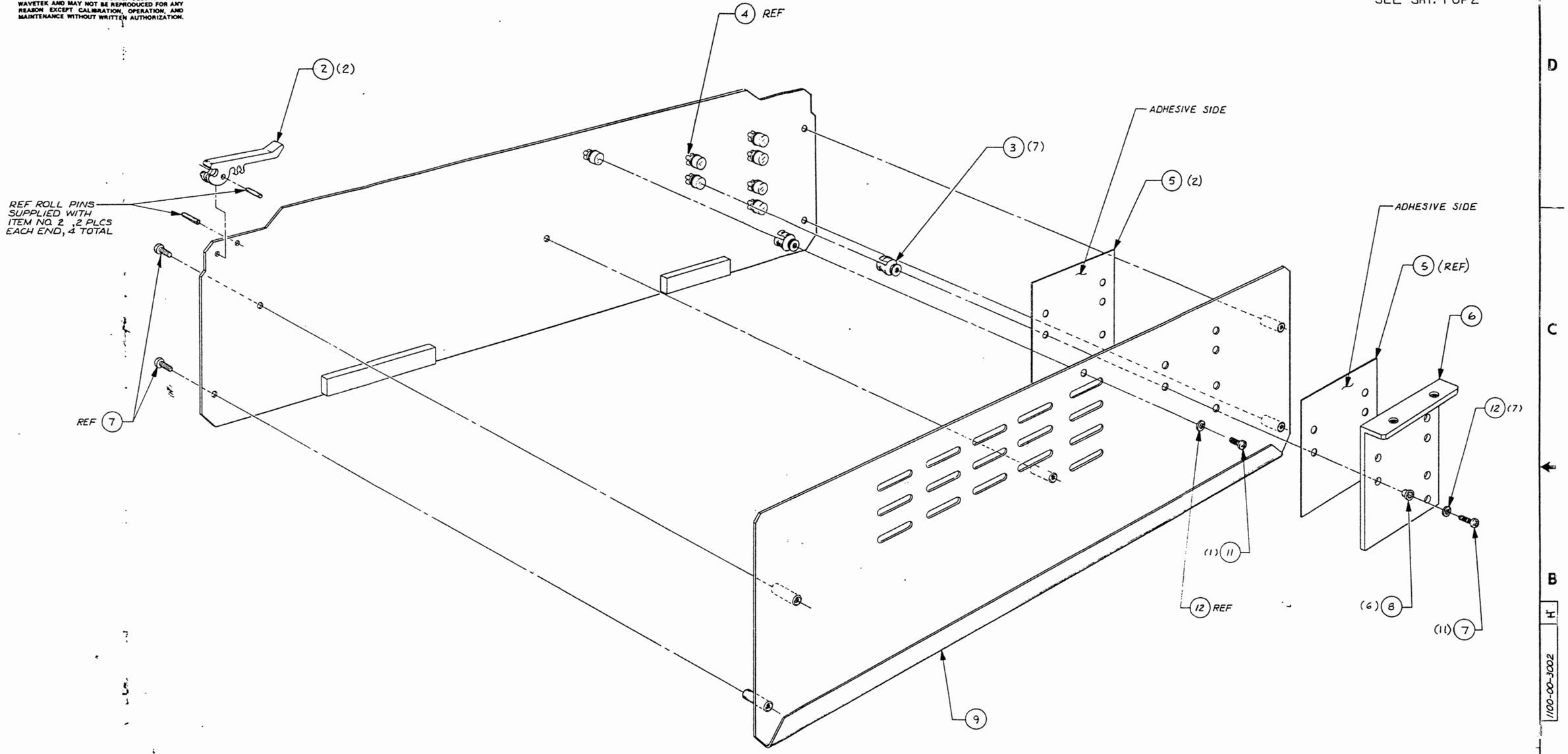

NOTE: UNLESS OTHERWISE SPECIFIED

REMOVE ALL BURRS AND BREAK SHARP EDGES	DRAWN CHERMACK	DATE 11-16-87	WAVETEK SAN DIEGO • CALIFORNIA
MATERIAL	PROJ ENGR	4/20/88	TITLE ASSEMBLY OUTPUT BOARD
FINISH WAVETEK PROCESS	RELEASE APPROV	4/20/88	TOLERANCE UNLESS OTHERWISE SPECIFIED .XXX ±.010 ANGLES ±1° .XX ±.030
	DO NOT SCALE DWG		MODEL NO. 1288
	SCALE NONE		DWG NO. 1100-00-3002 REV H
			CODE IDENT 23338 SHEET 2 OF 2

1100-00-3002 H

DOCUMENT CONTAINS PROPRIETARY INFORMATION
DESIGN RIGHTS BELONGING TO WAVETEK AND MAY NOT
REPRODUCED FOR ANY REASON EXCEPT CALIBRATION,
ERATION, AND MAINTENANCE WITHOUT WRITTEN AU-
RIZATION.

REV	ECO	BY	DATE	APP
A	ERO 9896	MG	3-15-88	[illegible]
B	ECO 9973	BG	10-26-88	[illegible]
C	ECO #89-017	MS	10-27-88	[illegible]
D	ECO 89-261	BG	7-25-89	KA
E	ECO 90-008	BG	10-12-89	KA

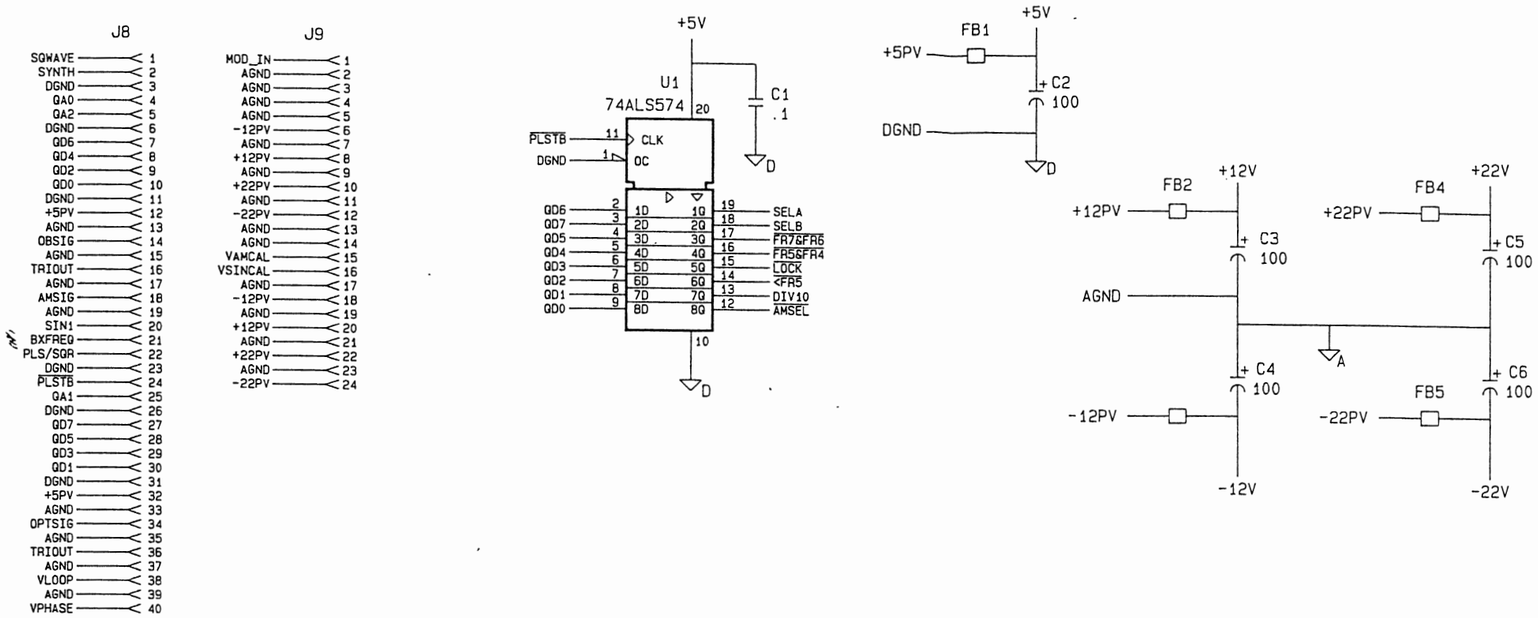

4. A ANALOG GROUND SYMBOL.
3. D DIGITAL GROUND SYMBOL.
2. ALL CAPACITORS ARE IN MICROFARADS.
1. ALL RESISTORS ARE IN OHMS, 1/8W, 1%, MF.

NOTE: UNLESS OTHERWISE SPECIFIED

REFERENCE DESIGNATORS LAST USED	REFERENCE DESIGNATORS NOT USED
R204, C101, FB7, TP13, U11, Q12, CR23	R7, R24, R66, R83, R84, R127, R129 R131-R145, R148-R153, R156-R199, R207, C7, C35, C44, C45, C47-C50, C52 C54, C63, C72, C75-C99, FB6, Q6-Q8, TP5, TP6

REMOVE ALL BURRS AND BREAK SHARP EDGES
MATERIAL
FINISH WAVETEK PROCESS
DO NOT SCALE DRAWING

DRAWN M.KINGSLEY DATE 3-18-88
CHECKED [illegible] 3-20-88
PROJ. ENGR. Daniel E. Stirk 3-25-88
RELEASE APPROV. Daniel E. Stirk 3-25-88

UNLESS OTHERWISE SPECIFIED DIMENSIONS ARE IN INCHES TOLERANCES ARE:
FRACTIONS ± DECIMALS .XX ± .XXX ± ANGLES ±

WAVETEK SAN DIEGO • CALIFORNIA

TITLE
SCHEMATIC
PHASE LOCK LOOP

SIZE D | FSCM NO. 23338 | DWG. NO. 0103-00-3003 | REV E
SCALE NONE | MODEL 1288 | SHEET 1 OF 5

0103-00-3003 E

THIS DOCUMENT CONTAINS PROPRIETARY INFORMATION AND DESIGN RIGHTS BELONGING TO WAVETEK AND MAY NOT BE REPRODUCED FOR ANY REASON EXCEPT CALIBRATION, OPERATION, AND MAINTENANCE WITHOUT WRITTEN AUTHORIZATION.

REV	ECO	BY	DATE	APP

REFERENCE DESIGNATORS	PART DESCRIPTION	ORIG-MFGR-PART-NO	MFGR	WAVETEK NO.	QTY/PT
R47	RES, MF, 1/8W, 1%, 110K	RN55D-1103F	TRW	4701-03-1103	1
R3	RES, MF, 1/8W, 1%, 1.21K	RN55D-1211F	TRW	4701-03-1211	1
R119 R120 R121	RES, MFLM, 1/8W, 1%, 12.1	3033RD12R1F	MEPCO	4701-03-1219	3
R48	RES, MF, 1/8W, 1%, 124K	RN55D-1243F	TRW	4701-03-1243	1
R38 R39	RES, MF, 1/8W, 1%, 14.3K	RN55D-1432F	TRW	4701-03-1432	2
R87	RES, MF, 1/8W, 1%, 150	RN55D-1500F	TRW	4701-03-1500	1
R77	RES, MF, 1/8W, 1%, 1.5K	RN55D-1501F	TRW	4701-03-1501	1
R86 R94	RES, MF, 1/8W, 1%, 15	RN55D-15R0F	TRW	4701-03-1509	2
R142	RES, MF, 1/8W, 1%, 16.5K	RN55D-1652F	TRW	4701-03-1652	1
R12 R13	RES, MF, 1/8W, 1%, 1.78K	RN55D-1781F	TRW	4701-03-1781	2
R133 R134 R135 R136	RES, MFLM, 1/8W, 1%, 17.8K	3033RD1782F	MEPCO	4701-03-1782	4
R203	RES, MF, 1/8W, 1%, 1.96K	RN55D-1961F	TRW	4701-03-1961	1
R17	RES, MF, 1/8W, 1%, 200	RN55D-2000F	TRW	4701-03-2000	1
R18 R25 R28 R29 R6 R7	RES, MF, 1/8W, 1%, 2K	RN55D-2001F	TRW	4701-03-2001	6
R32	RES, MF, 1/8W, 1%, 2.21K	RN55D-2211F	TRW	4701-03-2211	1
R54 R56 R58 R60	RES, MF, 1/8W, 1%, 226	RN1/4 226 1% T1	STKPL	4701-03-2260	4

WAVETEK PARTS LIST — TITLE: PCA SUB ASSY, OUTPUT BD 1288/288 — ASSEMBLY NO. 1208-00-3002 — REV

REFERENCE DESIGNATORS	PART DESCRIPTION	ORIG-MFGR-PART-NO	MFGR	WAVETEK NO.	QTY/PT
R22 R24 R63 R64 R65 R70 R71 R72 R73 R74	RES, MF, 1/8, 1%, 499	RN55D-4990F	TRW	4701-03-4990	10
R141 R206	RES, MF, 1/8W, 1%, 4.99K	RN55D-4991F	TRW	4701-03-4991	2
R139	RES, MF, 1/8W, 1%, 499K	RN55D-4993F	TRW	4701-03-4993	1
R67 R68	RES, MF, 1/8W, 1%, 49.9	RN55D-49R9F	CORNG	4701-03-4999	2
R19	RES, MF, 1/8W, 1%, 511	RN55D-5110F	TRW	4701-03-5110	1
R44 R45	RES, MF, 1/8W, 1%, 57.6K	RN55D-5762F	TRW	4701-03-5762	2
R132 R137	RES, MF, 1/8W, 1%, 6.19K	RN55D-6191F	TRW	4701-03-6191	2
R4	RES, MF, 1/8W, 1%, 68.1	RN55D-68R1F	TRW	4701-03-6819	1
R2	RES, MF, 1/8W, 1%, 90.9	RN55D-90R9F	TRW	4701-03-9099	1
R113	RES, MFLM, 1/4W, .1%, 249	5043RE2490B	MEPCO	4701-12-2490	1
R145 R90	RES, MF, 1/4W, 1%, 1.5K	RN60D1501F	TRW	4701-13-1501	2
R112 R114	RES, MFLM, 1W, .1%, 61.9	5053RE61R9B	MEPCO	4701-32-6199	2
R108 R109 R117 R118	RES, MF, 1W, .25%, T2 100	5053RC100R0C	MEPCO	4701-38-1000	4
R116	RES NETWORK 1K 2W 16PIN DIP	4116R-001-102	BOURN	4770-00-0019	1
JP1	RES, 0 OHM JUMPER	JP02T68Q	ROHM	4799-00-0087	1

WAVETEK PARTS LIST — TITLE: PCA SUB ASSY, OUTPUT BD 1288/288 — ASSEMBLY NO. 1208-00-3002 — REV

REFERENCE DESIGNATORS	PART DESCRIPTION	ORIG-MFGR-PART-NO	MFGR	WAVETEK NO.	QTY/PT
Q17 Q5 Q9	TRANS 2N5771 PNP SWITCH TO-92	2N5771	NSC	4901-05-7710	3
Q14	TRANS, MONO, DUAL, NPN	LS312-52	LINSY	7000-08-1200	1
U7 U8	OP AMP, WIDEBND, HI SLRTE, HI OUT	HA3-2542-5	HARIS	7000-25-4200	2
U11	OP AMP, HI SLEW RTE, WIDEBND, JFET, STD	MC34081P	MOT	7003-40-8100	1
U5	OP AMP, HI SLEW RTE, WIDEBND, JFET, PRIME	MC34081AP	MOT	7003-40-8101	1
U10	OP AMP, HI SLEW RTE, WIDEBND, JFET DUAL	MC34082P	MOT	7003-40-8200	1
U6 U9	SW, QUAD ANALOG, CMOS	DG211CJ	SILCON	8000-02-1100	2
U1	DECODER/DEMUX, 3 TO 8 LINE	SN74ALS138N	TI	8007-41-3800	1
U2 U3 U4	FLIP-FLOP, OCTAL D	SN74ALS574N	TI	8007-45-7450	3

WAVETEK PARTS LIST — TITLE: PCA SUB ASSY, OUTPUT BD 1288/288 — ASSEMBLY NO. 1208-00-3002 — REV

REFERENCE DESIGNATORS	PART DESCRIPTION	ORIG-MFGR-PART-NO	MFGR	WAVETEK NO.	QTY/PT
R80	RES, MF, 1/8W, 1%, 23.7K	RN55D-2372F	TRW	4701-03-2372	1
R202 R30 R34 R69	RES, MF, 1/8W, 1%, 249	RN55D-2490F	TRW	4701-03-2490	4
R122 R124 R126 R128 R37 R40 R43 R46 R66	RES, MF, 1/8W, 1%, 2.49K	RN55D-2491F	TRW	4701-03-2491	9
R201	RES, MF, 1/8W, 1%, 24.9	RN55D-24R9F	TRW	4701-03-2499	1
R140 R41 R42	RES, MF, 1/8W, 1%, 28.7K	RN55D-2872F	TRW	4701-03-2872	3
R15 R16	RES, MF, 1/8W, 1%, 332	RN55D-3320F	TRW	4701-03-3320	2
R147 R148 R75 R78 R8 R84	RES, MF, 1/8W, 1%, 33.2	RN55D-33R2F	TRW	4701-03-3329	6
R20	RES, MF, 1/8W, 1%, 392	RN55D-3920F	TRW	4701-03-3920	1
R85 R95	RES, MF, 1/8W, 1%, 39.2	RN55D-39R2F	TRW	4701-03-3929	2
R23 R26 R27	RES, MF, 1/8W, 1%, 4.02K	RN55D-4021F	TRW	4701-03-4021	3
R200 R31 R33	RES, MF, 1/8W, 1%, 40.2	RN55D-40R2F	TRW	4701-03-4029	3
R110	RES, MF, 1/8W, 1%, 41.2K	RN55D-4122F	TRW	4701-03-4122	1
R138	RES, MF, 1/8W, 1%, 43.2K	RN55D-4322F	TRW	4701-03-4322	1
R55 R57 R59 R61 R62	RES, MF, 1/8W, 1%, 453	RN55D-4530	TRW	4701-03-4530	5
R1 R111 R115	RES, MF, 1/8W, 1%, 4.75K	RN55D-4751F	TRW	4701-03-4751	3
R144	RES, MF, 1/8W, 1%, 47.5K	RN55D-4752F	TRW	4701-03-4752	1

WAVETEK PARTS LIST — TITLE: PCA SUB ASSY, OUTPUT BD 1288/288 — ASSEMBLY NO. 1208-00-3002 — REV

REFERENCE DESIGNATORS	PART DESCRIPTION	ORIG-MFGR-PART-NO	MFGR	WAVETEK NO.	QTY/PT
R79 R81	RES, CARBON, 1/2W, 5%, 1K	RCR20-0-102JS	AB	4799-00-0213	2
CR44	DIODE, ZENOR, 5.1V, 500MW, QIB, IN751A	1N751A	FAIR	4801-01-0751	1
CR10 CR11 CR14 CR15 CR16 CR17 CR18 CR19 CR20 CR21 CR24 CR25 CR26 CR28 CR29 CR30 CR31 CR32 CR33 CR34 CR35 CR36 CR37 CR38 CR39 CR40 CR41 CR42 CR43 CR6 CR7 CR8	DIODE, HIGH CONDUCTANCE, ULTRA FAST	1N5282	FAIR	4801-01-5282	32
CR1 CR2 CR3 CR4 CR45 CR5	DIODE 5082-2811 SCHOTTKY, 15V, 20MA	5082-2811	HP	4809-02-2811	6
Q15	TRANS 2N2219A NPN GENERAL PURPOSE TO-5	2N2219A	NSC	4901-02-2191	1
Q11 Q7	TRANS, SILICON, PLANAR, EPITAXIAL, NPN, TO-18	2N2369A	MOT	4901-02-3691	2
Q1 Q10 Q16 Q2	TRANS, NPN, TO-92	2N3563	FAIR	4901-03-5630	4
Q19 Q20 Q21	TRANS, NPN, TO-39	2N3725	FAIR	4901-03-7250	3
Q24 Q3 Q6	TRANS 2N3904 NPN GENERAL PURPOSE TO-92	2N3904	FAIR	4901-03-9040	3
Q12 Q13 Q25 Q4 Q8	TRANS, GENERAL PURPOSE, PNP, TO-92	2N4122	NSC	4901-04-1220	5
Q18 Q22 Q23	TRANS	2N5160-18	MOT	4901-05-1600	3

WAVETEK PARTS LIST — TITLE: PCA SUB ASSY, OUTPUT BD 1288/288 — ASSEMBLY NO. 1208-00-3002 — REV

NOTE UNLESS OTHERWISE SPECIFIED

REMOVE ALL BURRS AND BREAK SHARP EDGES	DRAWN	DATE
MATERIAL	CHECKED	
	PROJ. ENGR.	
	RELEASE APPROV.	
FINISH WAVETEK PROCESS	UNLESS OTHERWISE SPECIFIED DIMENSIONS ARE IN INCHES TOLERANCES ARE: FRACTIONS DECIMALS ANGLES ± XX ± XXX ± ±	
DO NOT SCALE DRAWING		

WAVETEK SAN DIEGO, CALIFORNIA

TITLE: PARTS LIST OUTPUT BOARD

SIZE	FSCM NO.	DWG. NO.	REV
D	23338	1100-00-3002	H
SCALE	MODEL 288	SHEET 2 OF 2	

DOCUMENT CONTAINS PROPRIETARY INFORMATION
DESIGN RIGHTS BELONGING TO WAVETEK AND MAY NOT
BE PRODUCED FOR ANY REASON EXCEPT CALIBRATION,
OPERATION, AND MAINTENANCE WITHOUT WRITTEN AU-
THORIZATION.

REV	ECO	BY	DATE	APP

LOCK LOOP FILTER

CHARGE PUMP

VPHASE
F01 B7

+12V
C16 .1
R9 750
R10 750
CR1 1N5282
Q1 2N5771
C17 .1

+5V
R6 1.5K
TP7 VLAGR
VLAGR
F02 C1
CR2 1N5282
CR3 1N5282

R11 3.01K

+12V
R109 1.5K
TP8 VLEADR
VLEADR
F02 C1
CR5 1N5282
CR4 1N5282

Q2 2N3563
CR6 1N5282
C18 .1
R12 750
R13 750
C19 .1
-12V

+5V
CR22 1N751A 5.1V
R15 165
C20 220

R16 750 .1%
R17 750 .1%
C24 1
C21 4.7
R18 750 .1%
R19 750 .1%
C22 1

R14 100
R20 100
C23 .022
R21 750 .1%
R22 750 .1%

+12V
R25 1M
R23 2.49K
C25 220
C26 220
+5V
+12V
U7A DG211
-12V

+12V
R26 1M
C27 .047
R24 750
C28 22
C29 22
U7D

C73 .0015
R130 750
C74 .1

+12V
C30 .1
C31 4.7
C32 .1
-12V
U6 MC34081P
R27 10
TP9 PLLER
R29 110K

R30 2.49K
C34 .1
FR5&FR4
C5 F01

R28 2.49K
C33 .1
FR7&FR6
C5 F01

R32 2.49K
C36 .1
LOCK
C5 F01

U7B
VLOOP
C5 F01

C38 22
C37 22
R31 2.49K
C39 .1
FR5
C5 F01
U7D

D

NOTE: UNLESS OTHERWISE SPECIFIED

REMOVE ALL BURRS AND BREAK SHARP EDGES	DRAWN M.KINGSLEY	DATE 3-10-88	WAVETEK SAN DIEGO, CALIFORNIA
MATERIAL	CHECKED		TITLE: SCHEMATIC PHASE LOCK LOOP
FINISH WAVETEK PROCESS	PROJ. ENGR.		
DO NOT SCALE DRAWING	RELEASE APPROV.		SIZE D · FSCM NO. 23338 · DWG. NO. 0103-00-3003 · REV E
UNLESS OTHERWISE SPECIFIED DIMENSIONS ARE IN INCHES TOLERANCES ARE: FRACTIONS ± · DECIMALS .XX ± .XXX ± · ANGLES ±			SCALE NONE · MODEL 1288 · SHEET 3 OF 5

0103-00-3003 E

THIS DOCUMENT CONTAINS PROPRIETARY INFORMATION AND DESIGN RIGHTS BELONGING TO WAVETEK AND MAY NOT BE REPRODUCED FOR ANY REASON EXCEPT CALIBRATION, OPERATION, AND MAINTENANCE WITHOUT WRITTEN AUTHORIZATION.

REV	ECO	BY	DATE	APP

SINE Z-CROSS

SIN3 F04 B1
R1 301
R4 392
R2 200
R3 2.49K
U2 LT1016CN8
C8 .1
C11 4.7 50V
C9 .1
C12 4.7
R154 15 +5V
R5 681
CR20 1N751A
C10 .1 -12V
R82 4.99K
R155 392
CR19 1N5282
CR18 1N5282
TP4 DGND
TP1 Z-CROSS
TP2 BXFREQ
TP3 SYNTH

BXFREQ F01 C7
SYNTH F01 C7
SQWAVE F01 C7
PLS/SQR F01 C7
SELA F01 C5
SELB F01 C5

SOURCE SELECTOR

+5V
C13 .1
U3 74ALS253
LOCK C5 F01

PHASE COMPARATOR

+5V
FB7
R8 4.7 1/4W
C15 .1
C14 .1
U4B 74LS390
U4A 74LS390
U5 8600-00-0497
DIV10 C5 F01
VLAGR C8 F03
VLEADR B8 F03

NOTE: UNLESS OTHERWISE SPECIFIED

REMOVE ALL BURRS AND BREAK SHARP EDGES	DRAWN M. KINGSLEY	DATE 9-15-88	WAVETEK SAN DIEGO, CALIFORNIA
MATERIAL	CHECKED		TITLE: SCHEMATIC PHASE LOCK LOOP
	PROJ. ENGR.		
FINISH WAVETEK PROCESS	RELEASE APPROV.		
DO NOT SCALE DRAWING	UNLESS OTHERWISE SPECIFIED DIMENSIONS ARE IN INCHES TOLERANCES ARE: FRACTIONS DECIMALS ANGLES ± .XX ± .XXX ± ±		SIZE D · FSCM NO. 23338 · DWG. NO. 0103-00-3003 · REV E · SCALE NONE · MODEL 1288 · SHEET 2 OF 5

0103-00-3003 E

DOCUMENT CONTAINS PROPRIETARY INFORMATION
DESIGN RIGHTS BELONGING TO WAVETEK AND MAY NOT
BE REPRODUCED FOR ANY REASON EXCEPT CALIBRATION,
OPERATION, AND MAINTENANCE WITHOUT WRITTEN AU-
THORIZATION.

REV	ECO	BY	DATE	APP

VARIABLE SUPPLY

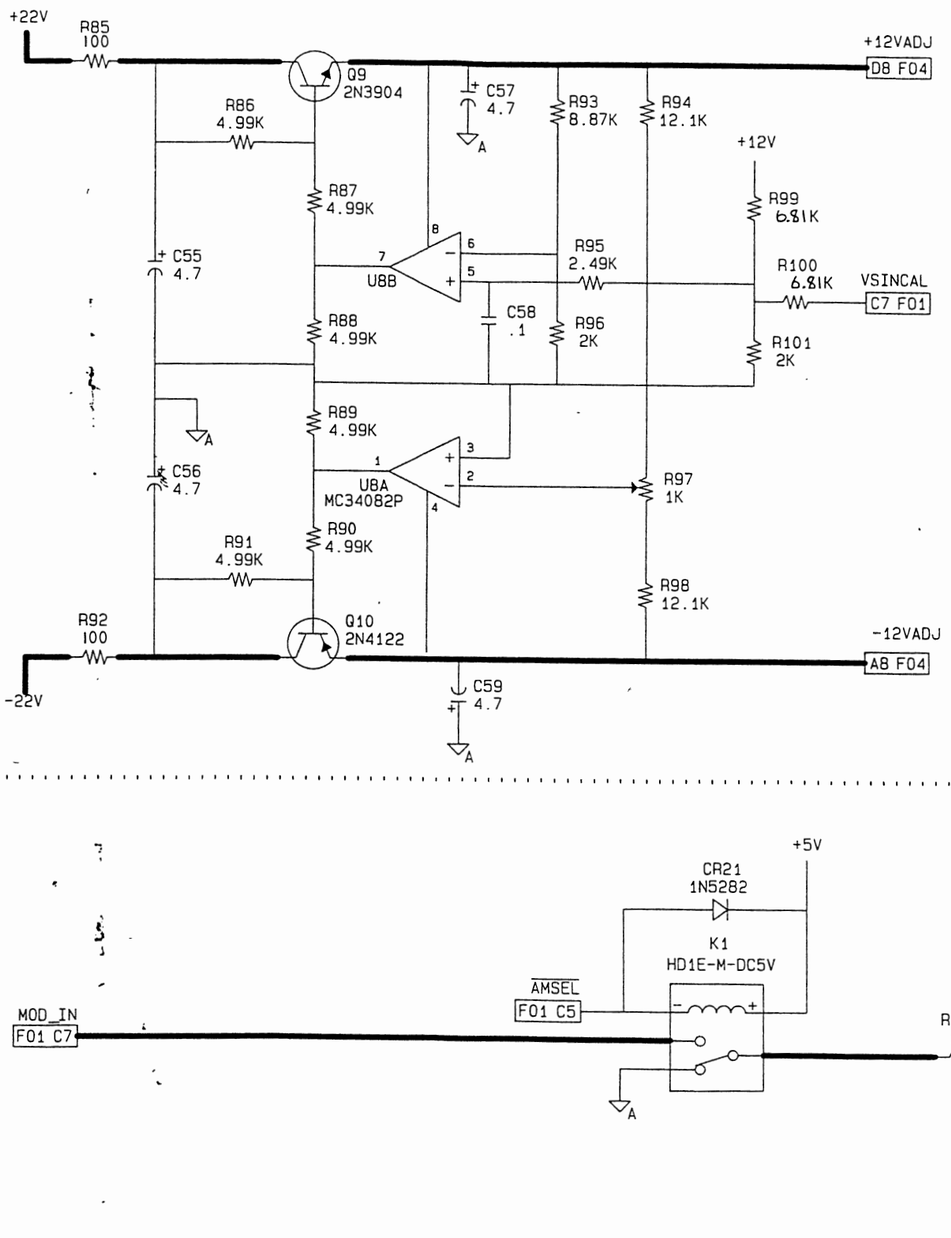

X-Y MULTIPLIER

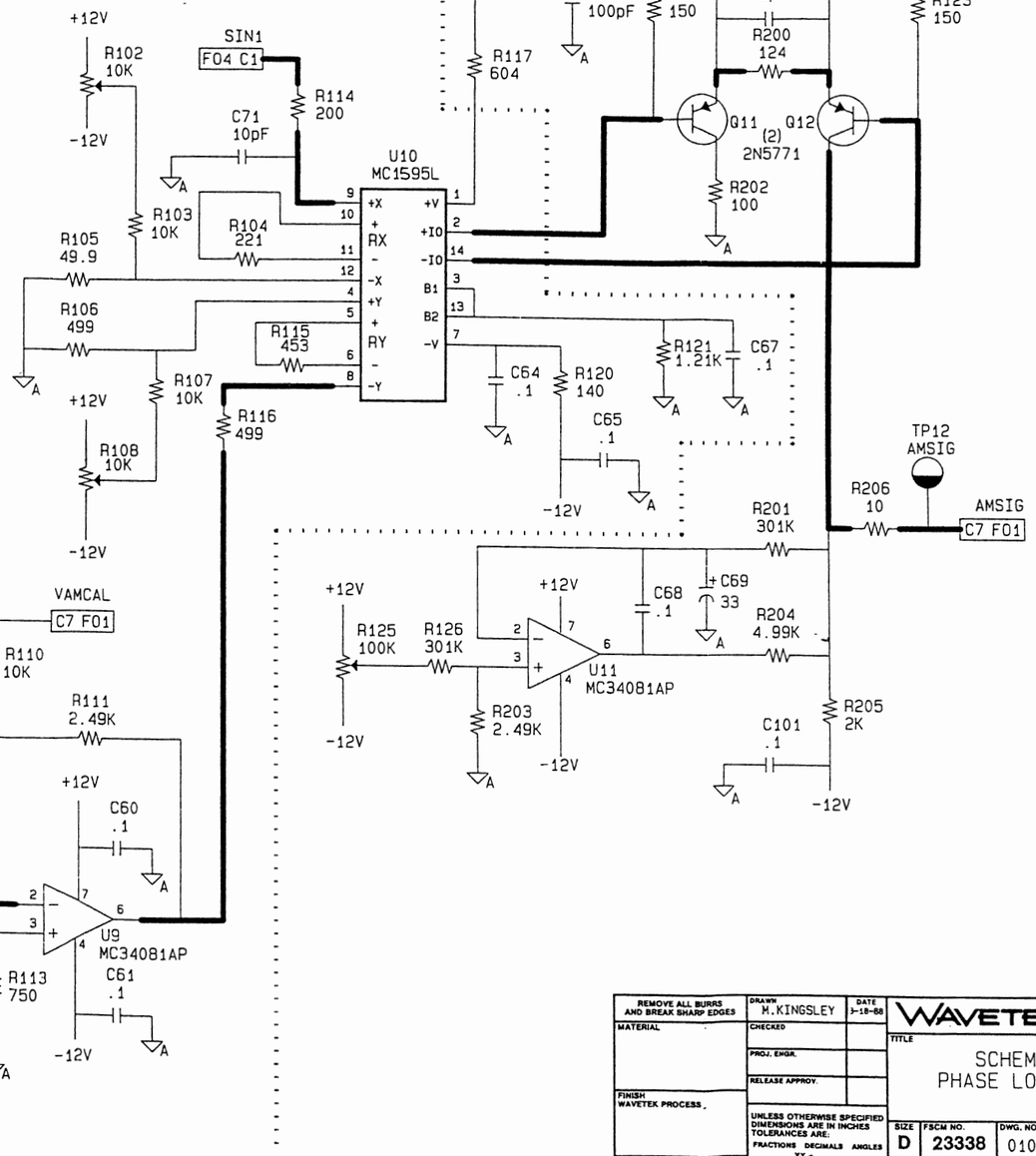

AM BUFFER

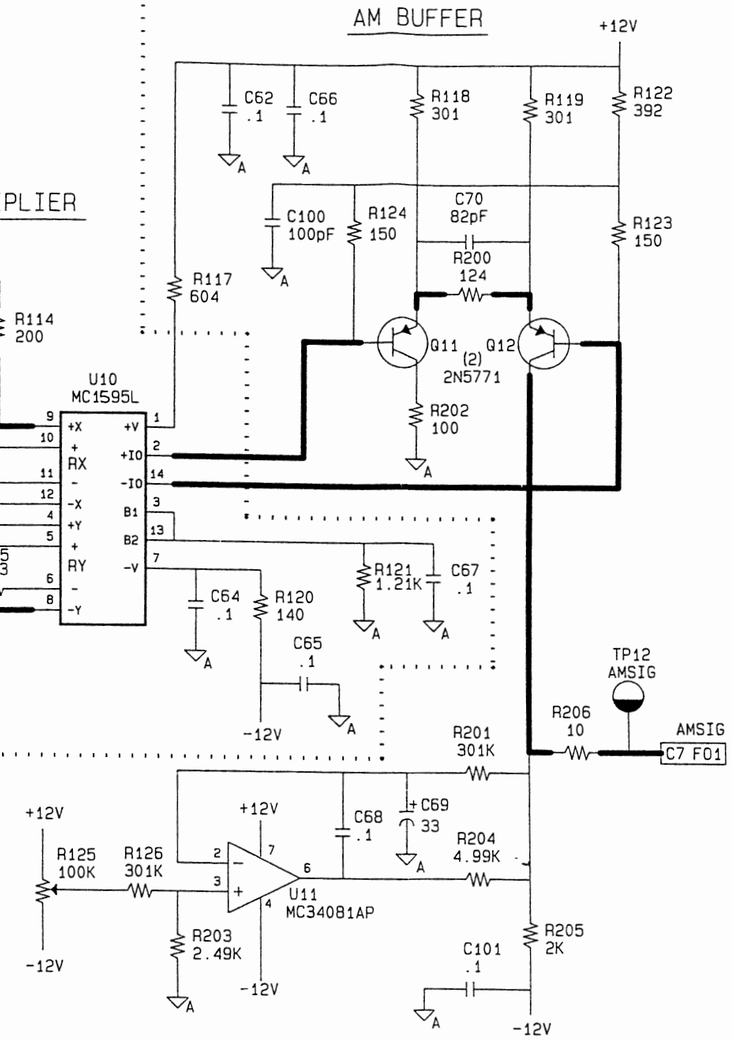

REMOVE ALL BURRS AND BREAK SHARP EDGES	DRAWN M.KINGSLEY	DATE 3-18-88	WAVETEK SAN DIEGO, CALIFORNIA
MATERIAL	CHECKED		TITLE: SCHEMATIC PHASE LOCK LOOP
FINISH WAVETEK PROCESS	PROJ. ENGR.		
DO NOT SCALE DRAWING	RELEASE APPROV.		SIZE D · FSCM NO. 23338 · DWG. NO. 0103-00-3003 · REV E
UNLESS OTHERWISE SPECIFIED DIMENSIONS ARE IN INCHES TOLERANCES ARE: FRACTIONS ± · DECIMALS .XX ± .XXX ± · ANGLES ±			SCALE NONE · MODEL 1288 · SHEET 5 OF 5

NOTE: UNLESS OTHERWISE SPECIFIED

0103-00-3003 E

THIS DOCUMENT CONTAINS PROPRIETARY INFORMATION AND DESIGN RIGHTS BELONGING TO WAVETEK AND MAY NOT BE REPRODUCED FOR ANY REASON EXCEPT CALIBRATION, OPERATION, AND MAINTENANCE WITHOUT WRITTEN AUTHORIZATION.

REV	ECO	BY	DATE	APP

SINE CONVERTER

+12VADJ
F05 D5

R37 10K
R38 2K
R39 30.1K
C41 .1
R62 100K
R40 150
R52 200
R41 39.2
R55 27.4
R42 392
CR11 *
CR12 *
R49 1.5K NOM
R53 10
R54 24.9
R56 10
CR13 *
CR7 *
CR8 *
TRIOUT
F01 C7
R33 100
R34 21.5
R35 155-180FAK-B01
R36 10
C40 10pF
R50 1K-500K
R57 21.5
R58 21.5
C43 15pF
R146 24.9
R59 10
CR9 *
CR10 *
R51 1.5K NOM
R147 10
CR16 *
R43 392
CR15 *
CR14 *
R44 39.2
R61 27.4
R45 150
R60 200
R63 100K
R46 10K
R47 2K
R48 30.1K
-12VADJ
F05 B5
C42 .1

* DIODE SET 5082-2811.

NOTE: UNLESS OTHERWISE SPECIFIED

SINE BUFFER

TP11 AGND
+12V
R68 301
R70 301
C102 NOM
C46 .1
CR17 1N5282
Q3 2N5771
R74 15
Q4 2N2369A
+12V
R64 100K
R65 15K
-12V
CR23 1N751A
R79 200
SIN1
C5 F01
TP13 SINCO
Q5 AD812
TP10 SIN
R75 392
R77 40.2
R128 100
SIN3
C8 F02
R208 500
R67 165
R71 15
R69 15
R76 165
R78 NOM
R80 1.21K
R81 1.21K
R210 1K-500 K
C51 NOM
C53 .1
R72 2K
R73 2K
-12V
-12V

0103-00-3003 E

REMOVE ALL BURRS AND BREAK SHARP EDGES	DRAWN M.KINGSLEY	DATE 3-18-88	WAVETEK SAN DIEGO, CALIFORNIA
MATERIAL	CHECKED		TITLE: SCHEMATIC PHASE LOCK LOOP
	PROJ. ENGR.		
FINISH WAVETEK PROCESS	RELEASE APPROV.		
DO NOT SCALE DRAWING	UNLESS OTHERWISE SPECIFIED DIMENSIONS ARE IN INCHES TOLERANCES ARE. FRACTIONS DECIMALS ANGLES ± XX ± XXX ± ±		SIZE D · FSCM NO. 23338 · DWG. NO. 0103-00-3003 · REV E · SCALE NONE · MODEL 1288 · SHEET 4 OF 5

THIS DOCUMENT CONTAINS PROPRIETARY INFORMATION AND DESIGN RIGHTS BELONGING TO WAVETEK AND MAY NOT BE REPRODUCED FOR ANY REASON EXCEPT CALIBRATION, OPERATION, AND MAINTENANCE WITHOUT WRITTEN AUTHORIZATION.

REV	ECO	BY	DATE	APP

REFERENCE DESIGNATORS	PART DESCRIPTION	ORIG-MFGR-PART-NO	MFGR	WAVETEK NO.	QTY/PT
NONE	SCHEMATIC, PHASE LOCK PCB	0103-00-3003	WVTK	0103-00-3003	1
NONE	PCA SUB ASSY, PLL BOARD 1288/288			1208-00-3003	1
3	CAN, SYNTHESIZER	1400-02-3443	WVTK	1400-02-3443	1
2	PC BD EJECTOR	87-2-C	BRIT	2800-07-0032	2

WAVETEK PARTS LIST | TITLE: ASSY, PHASE LOCK BD | ASSEMBLY NO. 1100-00-3003 | REV J | PAGE 1

REFERENCE DESIGNATORS	PART DESCRIPTION	ORIG-MFGR-PART-NO	MFGR	WAVETEK NO.	QTY/PT
R8	RES, CFLM 4.7 OHM 5% 1/4W	5043CX4R700J	MEPCO	116.9471	1
C40 C71	CAP, CER, 10PF, 100V, AXIAL	CAC02C0G100J100A	CORNG	1500-01-0006	2
C100	CAP, CER, 100PF, 100V, AXIAL	CAC02C0G101J100A	CORNG	1500-01-0106	1
C1 C10 C101 C13 C14 C15 C16 C17 C18 C19 C30 C32 C33 C34 C36 C39 C41 C42 C46 C53 C58 C60 C61 C62 C64 C65 C66 C67 C68 C8 C9	CAP, CER, MON, .1MF, 50V, AXIAL	CAC03Z5U104Z050A	CORNG	1500-01-0405	31
C43	CAP, CER, 15PF, 100V, AXIAL	CAC02C0G150J100A	CORNG	1500-01-5006	1
C73	CAP, CER, .0015MF, 1KV	DD-152 LONG LEAD	CRL	1500-01-5201	1
C51T	CAP, CER, 27PF, 5%, C0G, 100V, AXIAL	CAC02C0G270J100A	CORNG	1500-02-7006	1
C102T	CAP CER MON 2.7PF 50V	CCD2R7DNP0	ARCO	1500-02-7505	1
C70	CAP, CER, 82PF, 100V, 5%, C0G, AXIAL	SA102A820JAA	AVX	1500-08-2006	1
C5 C6	CAP, ELECT, 100MF, 35V RADIAL LEAD, SP .20	NRE101M35V8X11	NIC	1500-31-0102	2
C2 C3 C4	CAP, ELECT, 100MF, 25V, RADIAL LEAD-SP SIZE	NRE101M25V6.3X11	NIC	1500-31-0122	3

WAVETEK PARTS LIST | TITLE: PCA SUB ASSY, PLL BOARD 1288/288 | ASSEMBLY NO. 1208-00-3003 | REV | PAGE 1

REFERENCE DESIGNATORS	PART DESCRIPTION	ORIG-MFGR-PART-NO	MFGR	WAVETEK NO.	QTY/PT
TP11 TP4	TEST POINT, BLK, PC	TP-104-01-00	COMPO	2100-04-0054	2
TP1 TP10 TP12 TP13 TP2 TP3 TP7 TP8 TP9	TEST POINT, RED, PC	TP-104-01-02	COMPO	2100-04-0055	9
FB1 FB2 FB3 FB4 FB5	BALUN CORE, FERRITE, 680 OHMS	2943666671	FARIT	3100-00-0017	5
FB7	BALUN CORE, FERRITE, 82 OHMS	2743015111	FARIT	3100-00-0018	1
K1	RELAY, 1 FORMC, 5V, .312H, .296W	HD1E-M-DC5V	AROMT	4500-00-0034	1
R102 R108	POT, SIDE TRIM, 20T, 10K	68XR10K	BECK	4609-90-0009	2
R125 R64	POT, SIDE TRIM, 20T, 100K	68XR100K	BECK	4609-90-0012	2
R208	POT, SIDE TRIM, 20T, 500	68XR500	BECK	4609-90-0014	1
R97	POT, SIDE TRIM, 20T, 1K	68XR1K	BECK	4609-90-0015	1
R33	POT, SIDE TRIM, 20T, 100	68XR100	BECK	4609-90-0017	1
R16 R17 R18 R19 R21 R22	RES, MF, 1/8W, .1%, 750	RN55E-7500B	MEPCO	4701-02-7500	6
R128 R14 R20 R202 R85 R92	RES, MF, 1/8W, 1%, 100	RN55D-1000F	TRW	4701-03-1000	6
R103 R107 R110 R112 R37 R46	RES, MF, 1/8W, 1%, 10K	RN55D-1002F	TRW	4701-03-1002	6
R62 R63	RES, MF, 1/8W, 1%, 100K	RN55D-1003F	TRW	4701-03-1003	2

WAVETEK PARTS LIST | TITLE: PCA SUB ASSY, PLL BOARD 1288/288 | ASSEMBLY NO. 1208-00-3003 | REV | PAGE 3

REFERENCE DESIGNATORS	PART DESCRIPTION	ORIG-MFGR-PART-NO	MFGR	WAVETEK NO.	QTY/PT
C28 C29 C37 C38	CAP, ELECT, 22MF, 25V, RADIAL	SRA25VB22RM6X7LL	UNCON	1500-32-2002	4
C20 C25 C26	CAP, ELECT, 220MF, 20%, 16V, RADIAL	16TWSS220M	RUBY	1500-32-2104	3
C69	CAP, ELECT, 33MF, 25V RADIAL LEAD, SP .14	RLR 336RLR025M	IC	1500-33-3002	1
C11 C12 C21 C31 C55 C56 C57 C59	CAP, ELECT, 4.7MF/50V RADIAL LEAD, SP .10	ECEA1HV4R7SC	PANAS	1500-34-7903	8
C74	CAP, MET POLY, .1PP, 160V	171-104J160D	WEST	1500-41-0434	1
C22 C24	CAP, MYLAR, 1MF, 100V, RADIAL	PMT2R1.0K100	ITT	1500-41-0524	2
C23	CAP, MYLAR, .022MF100V	225P22391WD3	SPRAG	1500-42-2314	1
C27	CAP, MYLAR, .047MF100V	225P47391WD3	SPRAG	1500-44-7314	1
1	PCB, PHASE LOCK LOOP	1700-00-3003	WVTK	1700-00-3003	1
J9	CONN, HEADER, 24 PIN, RECPT, 2X12, .1 CTR, PCMT	102585-7	AMP	2100-02-0255	1
J8	CONN, HEADER, 40 PIN, RECPT, 2X20, .1 CTR PCMT	1-102585-2	AMP	2100-02-0256	1

WAVETEK PARTS LIST | TITLE: PCA SUB ASSY, PLL BOARD 1288/288 | ASSEMBLY NO. 1208-00-3003 | REV | PAGE 2

REFERENCE DESIGNATORS	PART DESCRIPTION	ORIG-MFGR-PART-NO	MFGR	WAVETEK NO.	QTY/PT
R25 R26	RES, MF, 1/8W, 1%, 1M	RN55D-1004F	TRW	4701-03-1004	2
R147 R206 R27 R36 R53 R56 R59	RES, MF, 1/8W, 1%, 10	5043ED10R100F	MEPCO	4701-03-1009	7
R29	RES, MF, 1/8W, 1%, 110K	RN55D-1103F	TRW	4701-03-1103	1
R76	RES, MF, 1/8W, 1%, 121	RN55D-1210F	TRW	4701-03-1210	1
R121 R80 R81	RES, MF, 1/8W, 1%, 1.21K	RN55D-1211F	TRW	4701-03-1211	3
R94 R98	RES, MF, 1/8W, 1%, 12.1K	RN55D-1212F	TRW	4701-03-1212	2
R200	RES, MF, 1/8W, 1%, 124	RN55D-1240F	TRW	4701-03-1240	1
R120	RES, MF, 1/8W, 1%, 140	RN55D-1400F	TRW	4701-03-1400	1
R123 R124 R40 R45	RES, MF, 1/8W, 1%, 150	RN55D-1500F	TRW	4701-03-1500	4
R109 R49T R51T R6	RES, MF, 1/8W, 1%, 1.5K	RN55D-1501F	TRW	4701-03-1501	4
R65	RES, MF, 1/8W, 1%, 15K	RN55D-1502F	TRW	4701-03-1502	1
R154 R69 R71 R74	RES, MF, 1/8W, 1%, 15	RN55D-15R0F	TRW	4701-03-1509	4
R15 R67	RES, MF, 1/8W, 1%, 165	RN55D-1650F	TRW	4701-03-1650	2
R114 R2 R52 R60 R79	RES, MF, 1/8W, 1%, 200	RN55D-2000F	TRW	4701-03-2000	5
R101 R205 R38 R47 R72 R73 R96	RES, MF, 1/8W, 1%, 2K	RN55D-2001F	TRW	4701-03-2001	7
R34 R57 R58	RES, MF, 1/8W, 1%, 21.5	RN55D-21R5F	TRW	4701-03-2159	3

WAVETEK PARTS LIST | TITLE: PCA SUB ASSY, PLL BOARD 1288/288 | ASSEMBLY NO. 1208-00-3003 | REV | PAGE 4

NOTE: UNLESS OTHERWISE SPECIFIED

REMOVE ALL BURRS AND BREAK SHARP EDGES	DRAWN	DATE	WAVETEK SAN DIEGO, CALIFORNIA
MATERIAL	CHECKED		TITLE: PARTS LIST PHASE LOCK BOARD
	PROJ. ENGR.		
	RELEASE APPROV.		
FINISH WAVETEK PROCESS	UNLESS OTHERWISE SPECIFIED DIMENSIONS ARE IN INCHES TOLERANCES ARE: FRACTIONS ± DECIMALS .XX ± .XXX ± ANGLES ±		SIZE D | FSCM NO. 23338 | DWG. NO. 1100-00-3003 | REV J
DO NOT SCALE DRAWING			SCALE | MODEL 288 | SHEET 1 OF 2

THIS DOCUMENT CONTAINS PROPRIETARY INFORMATION AND DESIGN RIGHTS BELONGING TO WAVETEK AND MAY NOT BE REPRODUCED FOR ANY REASON EXCEPT CALIBRATION, OPERATION, AND MAINTENANCE WITHOUT WRITTEN AUTHORIZATION.

REV	ECO	BY	DATE	APP
A02	ECL NO. 0002	MK	2-3-88	
A03	ECL NO. 0032	MK	3-7-88	
A04	ECL NO. 0044	MK	3-24-88	
B	ERO NO. 9717 RERELEASE NO CHANGE FROM A04	MK	5-2-88	
C	ECO NO. 9772	MK	6-24-88	
D	9805	MS	7/15/88	RBG
E	ECO # 9914	MS	10/14/88	
F	ECO 9973	BG	10/28/88	
G	ECO #89-017	MS	1/27/89	
H	ECO 89-261	BG	7/25/89	

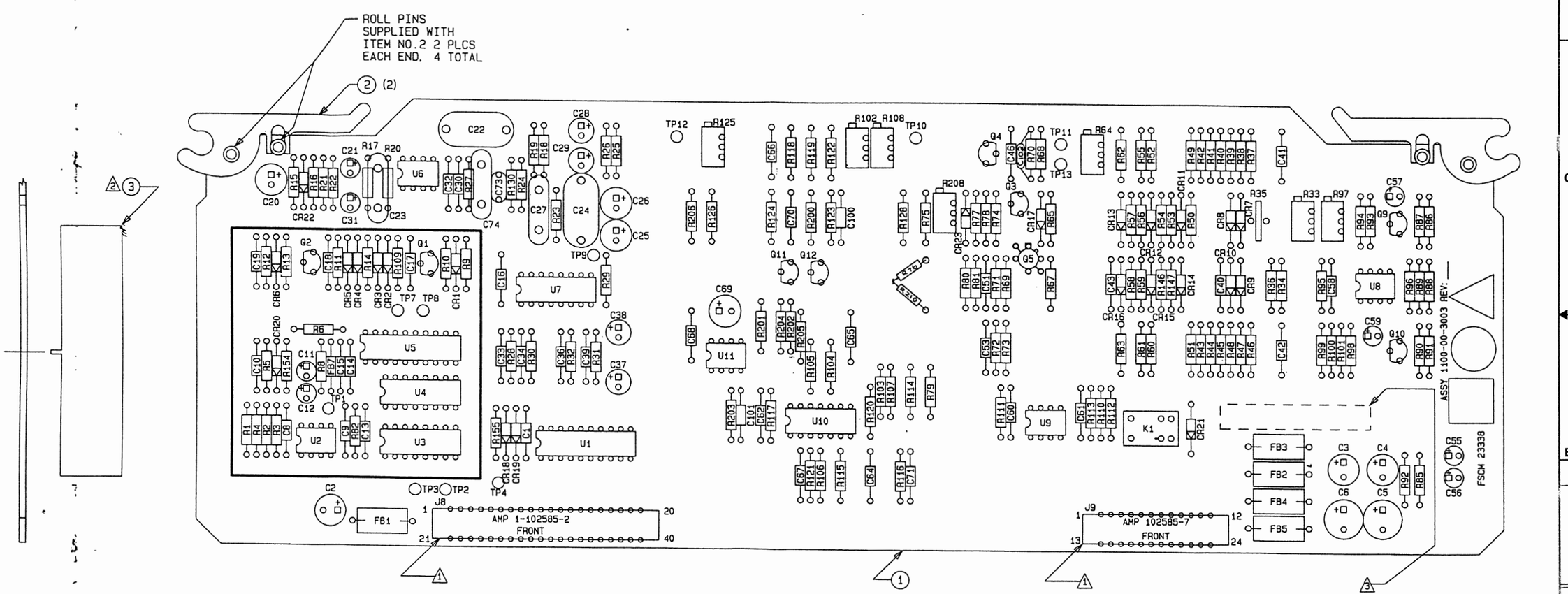

3 INSTALL SERIAL NO. LABEL APPROXIMATELY WHERE SHOWN.

2 INSTALL CAN FLUSH TO COMPONENT SIDE OF PC BOARD. SOLDER TABS ON CIRCUIT SIDE.

1 MANUFACTURER'S MARKING INDICATES CORRECT ORIENTATION OF CONNECTOR.

NOTE: UNLESS OTHERWISE SPECIFIED

REMOVE ALL BURRS AND BREAK SHARP EDGES	DRAWN MKINGSLEY	DATE	WAVETEK SAN DIEGO, CALIFORNIA
MATERIAL	CHECKED		TITLE: PCA PHASE LOCK LOOP
	PROJ. ENGR.	7-11-88	
	RELEASE APPROV. RBG	7/11/88	
FINISH WAVETEK PROCESS	UNLESS OTHERWISE SPECIFIED DIMENSIONS ARE IN INCHES TOLERANCES ARE: FRACTIONS DECIMALS ANGLES ± XX ± .020 XXX ± .010 ±1°		SIZE D; FSCM NO. 23338; DWG. NO. 1100-00-3003; REV H
DO NOT SCALE DRAWING			SCALE 2:1; MODEL 1288; SHEET 1 OF 1

THIS DOCUMENT CONTAINS PROPRIETARY INFORMATION AND DESIGN RIGHTS BELONGING TO WAVETEK AND MAY NOT BE REPRODUCED FOR ANY REASON EXCEPT CALIBRATION, OPERATION, AND MAINTENANCE WITHOUT WRITTEN AUTHORIZATION.

REV	ECO	BY	DATE	APP
A	ERO 9896	MB	3-25-88	[illegible]
B	89-261	BG	7-25-89	KA
C	89-424	BG	7-25-89	KA

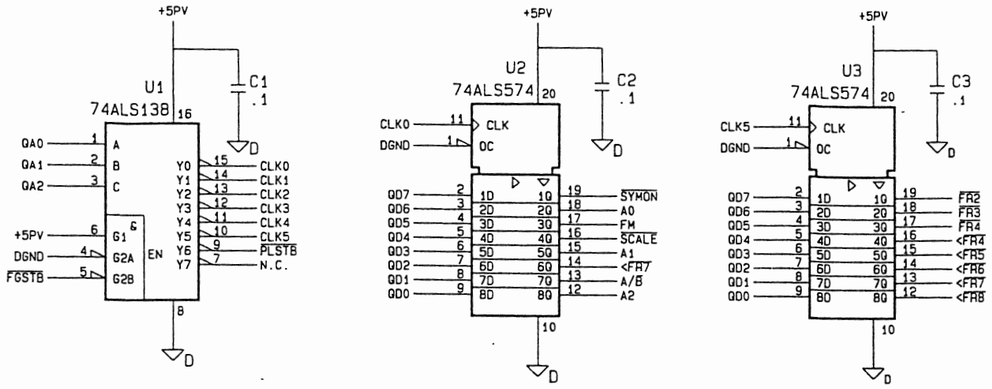

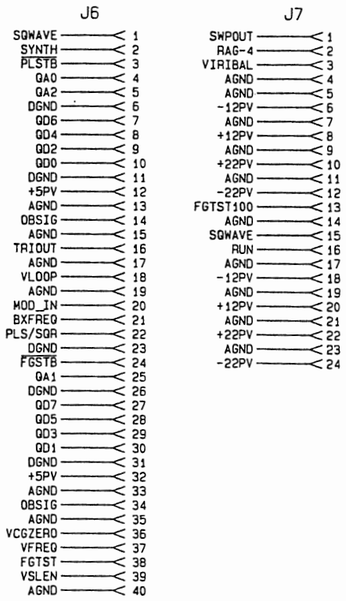

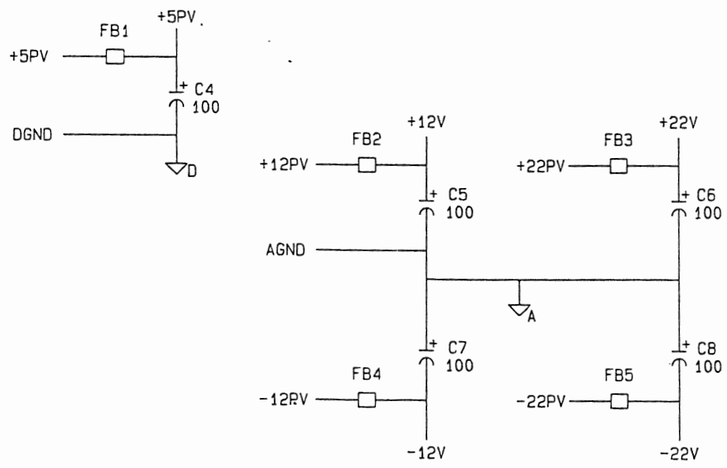

4. ⏚A ANALOG GROUND SYMBOL.
3. ⏚D DIGITAL GROUND SYMBOL.
2. ALL CAPACITORS ARE IN MICROFARADS.
1. ALL RESISTORS ARE IN OHMS, 1/8W, 1%, MF.

NOTE: UNLESS OTHERWISE SPECIFIED

REFERENCE DESIGNATORS LAST USED	REFERENCE DESIGNATORS NOT USED
R141, C96, Q27, U29, K4, TP16, FB5, CR44,	R88, C46, C47, C68, C89, Q5, Q6, Q7, Q10 CR7-CR10, U19, U20

REMOVE ALL BURRS AND BREAK SHARP EDGES
MATERIAL
FINISH WAVETEK PROCESS
DO NOT SCALE DRAWING

DRAWN M. KINGSLEY 1-18-88
CHECKED 3-22-88
PROJ. ENGR. 3-25-88
RELEASE APPROV. 3-25-88

UNLESS OTHERWISE SPECIFIED DIMENSIONS ARE IN INCHES TOLERANCES ARE:
FRACTIONS ± DECIMALS .XX ± .XXX ± ANGLES ±

WAVETEK SAN DIEGO, CALIFORNIA

TITLE
SCHEMATIC
FUNCTION GENERATOR

SIZE	FSCM NO.	DWG. NO.	REV
D	23338	0103-00-3004	C

SCALE NONE | MODEL 1288 | SHEET 1 OF 7

0103-00-3004 C

THIS DOCUMENT CONTAINS PROPRIETARY INFORMATION AND DESIGN RIGHTS BELONGING TO WAVETEK AND MAY NOT BE REPRODUCED FOR ANY REASON EXCEPT CALIBRATION, OPERATION, AND MAINTENANCE WITHOUT WRITTEN AUTHORIZATION.

REV	ECO	BY	DATE	APP

REFERENCE DESIGNATORS	PART DESCRIPTION	DRIG-MFGR-PART-NO	MFGR	WAVETEK NO.	QTY/PT
R104	RES, MF, 1/8W, 1%, 221	RN55D-2210F	TRW	4701-03-2210	1
R111 R203 R23 R28 R3 R30 R31 R32 R95	RES, MF, 1/8W, 1%, 2.49K	RN55D-2491F	TRW	4701-03-2491	9
R146 R54	RES, MF, 1/8W, 1%, 24.9	RN55D-24R9F	TRW	4701-03-2499	2
R55 R61	RES, MF, 1/8W, 1%, 27.4	RN55D-27R4F	TRW	4701-03-2749	2
R1 R118 R119 R68 R70	RES, MF, 1/8W, 1%, 301	RN55D-3010F	TRW	4701-03-3010	5
R11	RES, MF, 1/8W, 1%, 3.01K	RN55D-3011F	TRW	4701-03-3011	1
R39 R48	RES, MF, 1/8W, 1%, 30.1K	RN55D-3012F	TRW	4701-03-3012	2
R126 R201	RES, MF, 1/8W, 1%, 301K	RN55D-3013F	TRW	4701-03-3013	2
R122 R155 R4 R42 R43 R75 R78T	RES, MF, 1/8W, 1%, 392	RN55D-3920F	TRW	4701-03-3920	7
R41 R44	RES, MF, 1/8W, 1%, 39.2	RN55D-39R2F	TRW	4701-03-3929	2
R77	RES, MF, 1/8W, 1%, 40.2	RN55D-40R2F	TRW	4701-03-4029	1
R115	RES, MF, 1/8W, 1%, 453	RN55D-4530	TRW	4701-03-4530	1
R106 R116	RES, MF, 1/8, 1%, 499	RN55D-4990F	TRW	4701-03-4990	2
R204 R82 R86 R87 R88 R89 R90 R91	RES, MF, 1/8W, 1%, 4.99K	RN55D-4991F	TRW	4701-03-4991	8
R105	RES, MF, 1/8W, 1%, 49.9	RN55D-49R9F	CORNO	4701-03-4999	1

WAVETEK PARTS LIST | TITLE: PCA SUB ASSY, PLL BOARD 1288/288 | ASSEMBLY NO. 1208-00-3003 | REV

REFERENCE DESIGNATORS	PART DESCRIPTION	DRIG-MFGR-PART-NO	MFGR	WAVETEK NO.	QTY/PT
Q1 Q11 Q12 Q3	TRANS 2N5771 PNP SWITCH TO-92	2N5771	NSC	4901-05-7710	4
R35	THERMISTER, 10, 0000HMS, 25%, CUST, COATED	155-180FAK-B01	FENWL	5300-00-0002	1
R210 R50	THERMISTER, 50 OHM, +-10%, @ 25 DEG C	1K-500-K	MCI	5300-00-0013	2
Q5	TRANS, MONO, DUAL, NPN	LS312-52	LINSY	7000-08-1200	1
U2	COMPARATOR, ULTRA FAST, 10NS	LT1016CN8	LINTE	7000-10-1600	1
U10	MULTIPLIER, WIDEBAND MONOLITHIC, 4 QUAD	MC1595L	MOT	7000-15-9500	1
U6	OP AMP, HI SLEW RTE, WIDEBND, JFET, STD	MC34081P	MOT	7003-40-8100	1
U11 U9	OP AMP, HI SLEW RTE, WIDEBND, JFET, PRIME	MC34081AP	MOT	7003-40-8101	2
U8	OP AMP, HI SLEW RTE, WIDEBND, JFET DUAL	MC34082P	MOT	7003-40-8200	1
U7	SW, QUAD ANALOG, CMOS	DG211CJ	SLCON	8000-02-1100	1
U3	MUX/SEL, DUAL 1 OF 4 DATA, 3/STATE	SN74ALS253N	TI	8007-42-5300	1
U4	COUNTER, DUAL 4B BCD,	74LS390PC	FAIR	8007-43-9010	1

WAVETEK PARTS LIST | TITLE: PCA SUB ASSY, PLL BOARD 1288/288 | ASSEMBLY NO. 1208-00-3003 | REV

REFERENCE DESIGNATORS	PART DESCRIPTION	DRIG-MFGR-PART-NO	MFGR	WAVETEK NO.	QTY/PT
R117	RES, MF, 1/8W, 1%, 604	RN55D-6040F	TRW	4701-03-6040	1
R5	RES, MF, 1/8W, 1%, 681	RN55D-6810F	TRW	4701-03-6810	1
R100 R99	RES, MF, 1/8W, 1%, 6.81K	RN55D-6811F	TRW	4701-03-6811	2
R10 R113 R12 R13 R130 R24 R9	RES, MF, 1/8W, 1%, 750	RN55D-7500F	TRW	4701-03-7500	7
R93	RES, MF, 1/8W, 1%, 8.87K	RN55D-8871F	TRW	4701-03-8871	1
CR20 CR22 CR23	DIODE, ZENOR, 5.1V, 500MW, GIB, IN751A	1N751A	FAIR	4801-01-0751	3
CR1 CR17 CR18 CR19 CR2 CR21 CR3 CR4 CR5 CR6	DIODE, HIGH CONDUCTANCE, ULTRA FAST	1N5282	FAIR	4801-01-5282	10
CR10 11 12 13 14 15 16 7 8 9	DIODE SET, 5082-2811 QTY: 10: 4809-02-2811	4898-00-0015	KLG	4898-00-0015	1
Q4	TRANS, SILICON, PLANAR, EPITAXIAL, NPN, TO-18	2N2369A	MOT	4901-02-3691	1
Q2	TRANS, NPN, TO-92	2N3563	FAIR	4901-03-5630	1
Q9	TRANS 2N3904 NPN GENERAL PURPOSE TO-92	2N3904	FAIR	4901-03-9040	1
Q10	TRANS, GENERAL PURPOSE, PNP, TO-92	2N4122	NSC	4901-04-1220	1

WAVETEK PARTS LIST | TITLE: PCA SUB ASSY, PLL BOARD 1288/288 | ASSEMBLY NO. 1208-00-3003 | REV

REFERENCE DESIGNATORS	PART DESCRIPTION	DRIG-MFGR-PART-NO	MFGR	WAVETEK NO.	QTY/PT
U1	TTL FLIP-FLOP, OCTAL D	SN74ALS574N	TI	8007-45-7450	1
U5	PAL, PROG USES 1 EA 8000-16-8000	8600-00-0497	WVTK	8600-00-0497	1

WAVETEK PARTS LIST | TITLE: PCA SUB ASSY, PLL BOARD 1288/288 | ASSEMBLY NO. 1208-00-3003 | REV

NOTE: UNLESS OTHERWISE SPECIFIED

REMOVE ALL BURRS AND BREAK SHARP EDGES	DRAWN	DATE	WAVETEK SAN DIEGO, CALIFORNIA
MATERIAL	CHECKED		TITLE: PARTS LIST PHASE LOCK BOARD
	PROJ. ENGR		
	RELEASE APPROV.		
FINISH WAVETEK PROCESS	UNLESS OTHERWISE SPECIFIED DIMENSIONS ARE IN INCHES TOLERANCES ARE: FRACTIONS DECIMALS ANGLES ± XX ± XXX ± °		SIZE D | FSCM NO. 23338 | DWG. NO. 1100-00-3003 | REV J
DO NOT SCALE DRAWING			SCALE | MODEL 288 | SHEET 2 OF 2

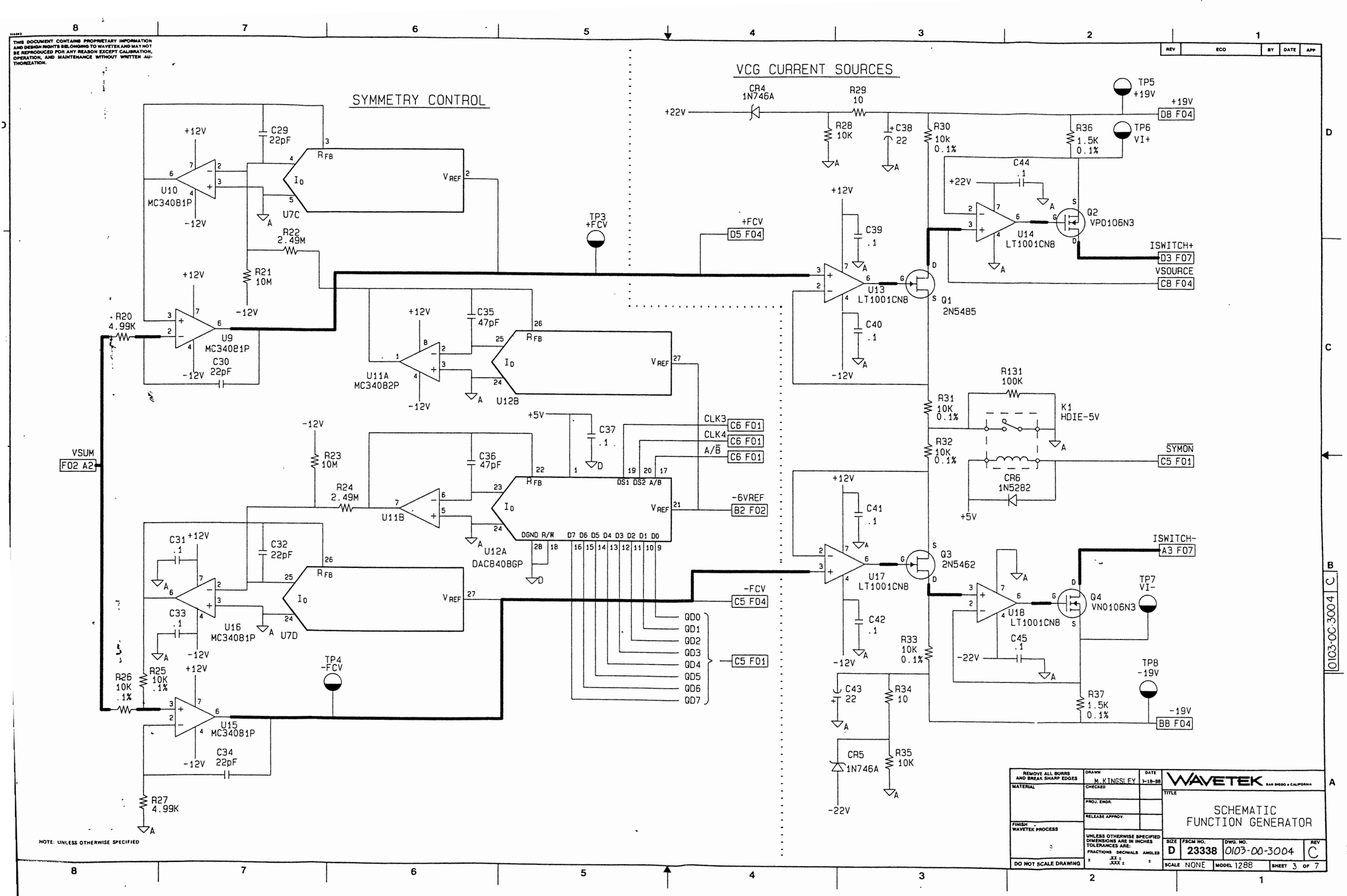

THIS DOCUMENT CONTAINS PROPRIETARY INFORMATION AND DESIGN RIGHTS BELONGING TO WAVETEK AND MAY NOT BE REPRODUCED FOR ANY REASON EXCEPT CALIBRATION, OPERATION, AND MAINTENANCE WITHOUT WRITTEN AUTHORIZATION.
SYMMETRY CONTROL
VCG CURRENT SOURCES
U10 MC34081P
U7C
U9 MC34081P
U11A MC34082P
U12B
U11B
U12A DAC8408GP
U16 MC34081P
U7D
U15 MC34081P
U13 LT1001CN8
U14 LT1001CN8
U17 LT1001CN8
U18 LT1001CN8
Q1 2N5485
Q2 VP0106N3
Q3 2N5462
Q4 VN0106N3
CR4 1N746A
CR5 1N746A
CR6 1N5282
K1 HDIE-5V
TP3 +FCV
TP4 -FCV
TP5 +19V
TP6 VI+
TP7 VI-
TP8 -19V
+FCV D5 F04
+19V D8 F04
ISWITCH+ D3 F07
VSOURCE C8 F04
SYMON C5 F01
ISWITCH- A3 F07
-19V B8 F04
VSUM F02 A2
CLK3 C6 F01
CLK4 C6 F01
A/B̄ C6 F01
-6VREF B2 F02
-FCV C5 F04
QD0 QD1 QD2 QD3 QD4 QD5 QD6 QD7 C5 F01
NOTE: UNLESS OTHERWISE SPECIFIED
REMOVE ALL BURRS AND BREAK SHARP EDGES
MATERIAL
FINISH WAVETEK PROCESS
DO NOT SCALE DRAWING
DRAWN M. KINGSLEY
DATE 3-18-88
CHECKED
PROJ. ENGR.
RELEASE APPROV.
UNLESS OTHERWISE SPECIFIED DIMENSIONS ARE IN INCHES TOLERANCES ARE:
FRACTIONS DECIMALS ANGLES
WAVETEK SAN DIEGO • CALIFORNIA
TITLE
SCHEMATIC FUNCTION GENERATOR
SIZE D
FSCM NO. 23338
DWG. NO. 0103-00-3004
REV C
SCALE NONE
MODEL 1288
SHEET 3 OF 7
0103-00-3004 C

THIS DOCUMENT CONTAINS PROPRIETARY INFORMATION AND DESIGN RIGHTS BELONGING TO WAVETEK AND MAY NOT BE REPRODUCED FOR ANY REASON EXCEPT CALIBRATION, OPERATION, AND MAINTENANCE WITHOUT WRITTEN AUTHORIZATION.

REV	ECO	BY	DATE	APP

VCG SUMMING AMPLIFIER

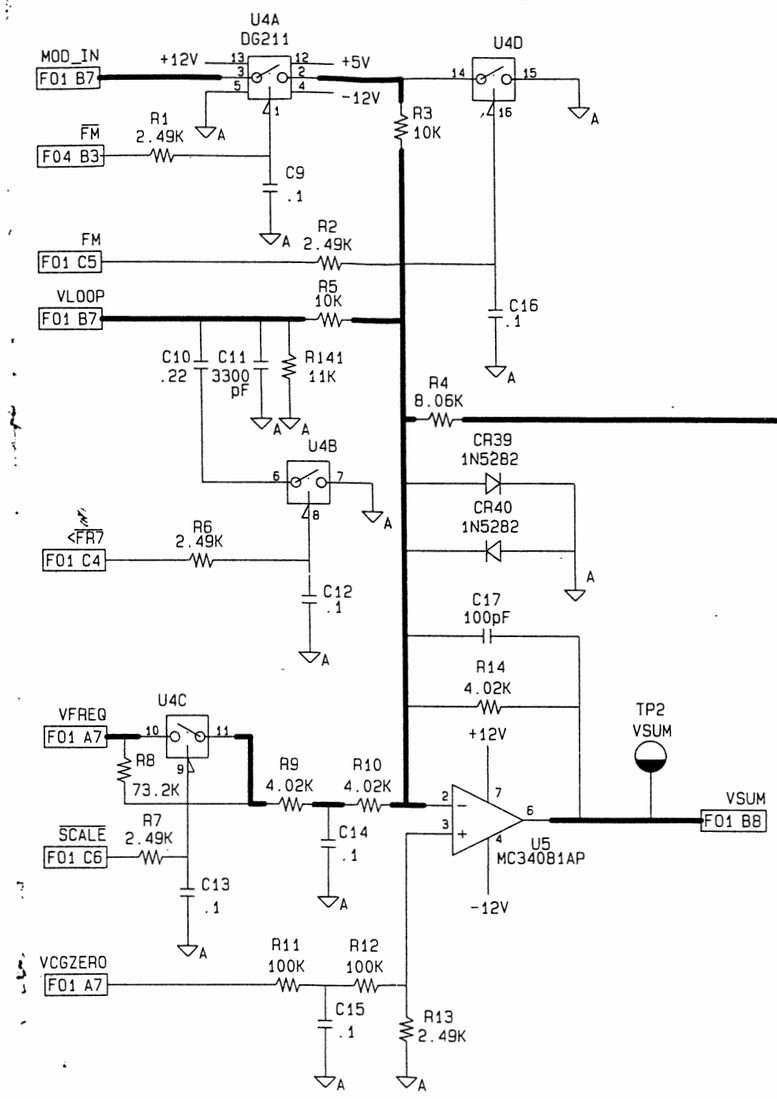

SWEEP GENERATOR

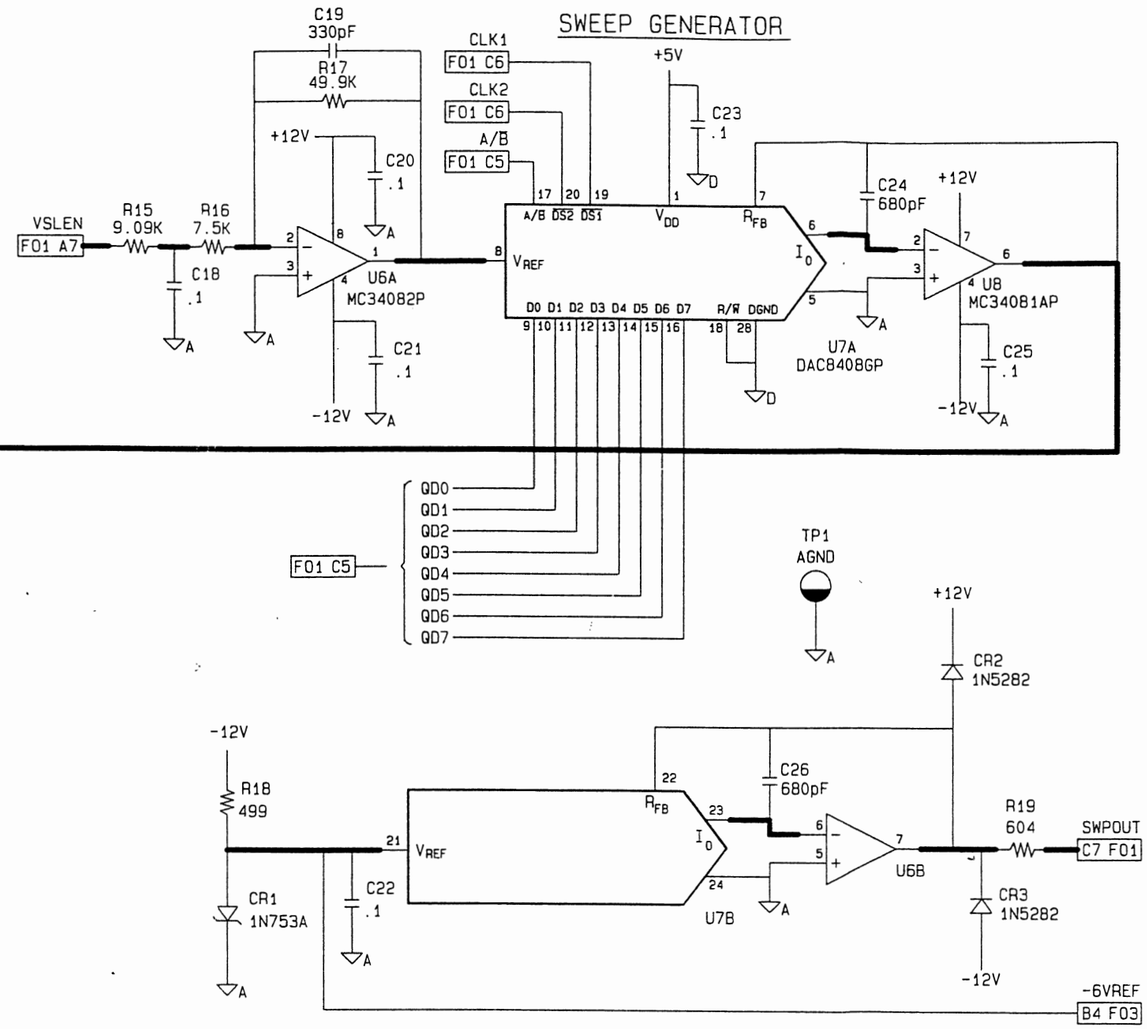

NOTE: UNLESS OTHERWISE SPECIFIED

REMOVE ALL BURRS AND BREAK SHARP EDGES	DRAWN M. KINGSLEY	DATE 5-10-88	WAVETEK SAN DIEGO, CALIFORNIA
MATERIAL	CHECKED		TITLE: SCHEMATIC FUNCTION GENERATOR
	PROJ. ENGR.		
FINISH WAVETEK PROCESS	RELEASE APPROV.		
DO NOT SCALE DRAWING	UNLESS OTHERWISE SPECIFIED DIMENSIONS ARE IN INCHES TOLERANCES ARE: FRACTIONS ± DECIMALS .XX ± .XXX ± ANGLES ±		SIZE D · FSCM NO. 23338 · DWG. NO. 0103-00-3004 · REV C · SCALE NONE · MODEL 1288 · SHEET 2 OF 7

0103-00-3004 C

THIS DOCUMENT CONTAINS PROPRIETARY INFORMATION AND DESIGN RIGHTS BELONGING TO WAVETEK AND MAY NOT BE REPRODUCED FOR ANY REASON EXCEPT CALIBRATION, OPERATION, AND MAINTENANCE WITHOUT WRITTEN AUTHORIZATION.

REV	ECO	BY	DATE	APP

FREQUENCY RANGE SWITCHES

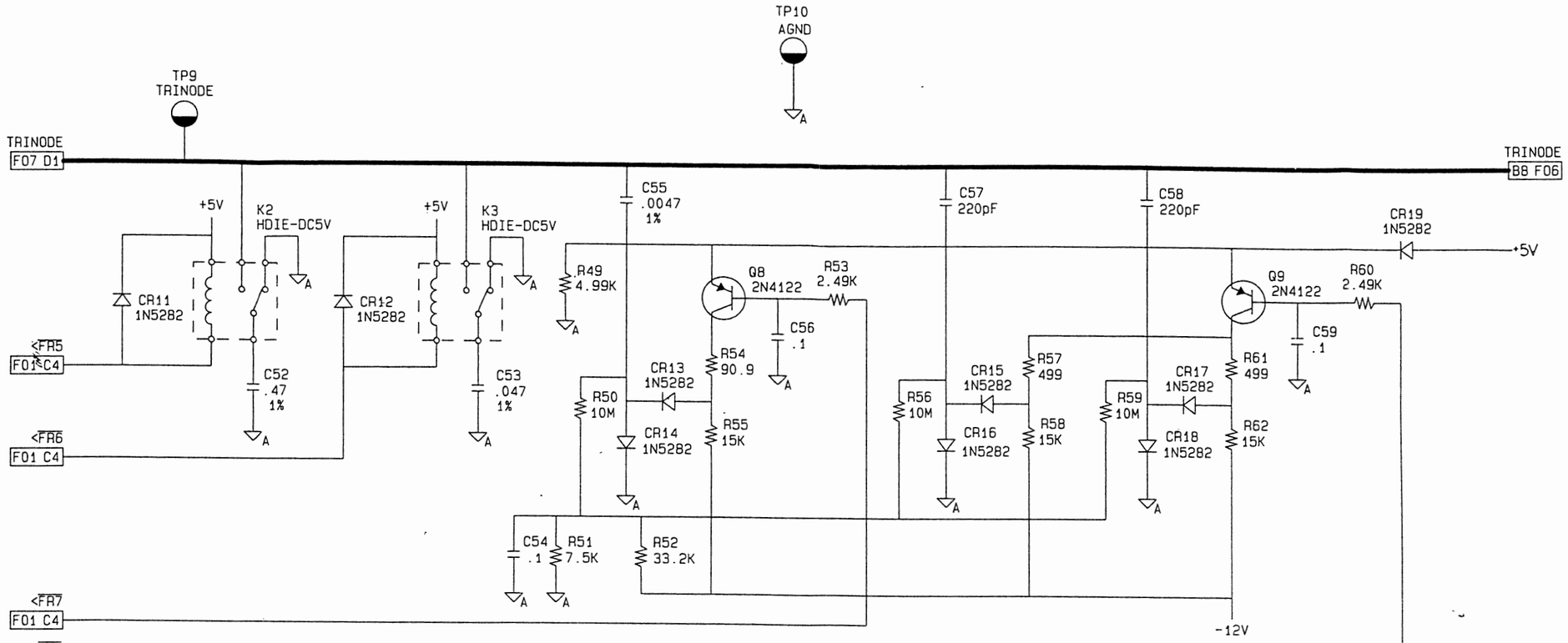

NOTE: UNLESS OTHERWISE SPECIFIED

REMOVE ALL BURRS AND BREAK SHARP EDGES	DRAWN M.KINGSLEY	DATE 1-18-88	WAVETEK SAN DIEGO, CALIFORNIA
MATERIAL	CHECKED		TITLE: SCHEMATIC FUNCTION GENERATOR
	PROJ. ENGR.		
FINISH WAVETEK PROCESS	RELEASE APPROV.		
DO NOT SCALE DRAWING	UNLESS OTHERWISE SPECIFIED DIMENSIONS ARE IN INCHES TOLERANCES ARE: FRACTIONS DECIMALS ANGLES ± .XX ± .XXX ± ±		SIZE D · FSCM NO. 23338 · DWG. NO. 0103-00-3004 · REV C · SCALE NONE · MODEL 1288 · SHEET 5 OF 7

0103-00-3004 C

THIS DOCUMENT CONTAINS PROPRIETARY INFORMATION AND DESIGN RIGHTS BELONGING TO WAVETEK AND MAY NOT BE REPRODUCED FOR ANY REASON EXCEPT CALIBRATION, OPERATION, AND MAINTENANCE WITHOUT WRITTEN AUTHORIZATION.

REV	ECO	BY	DATE	APP

TRIGGER BASELINE COMPENSATION

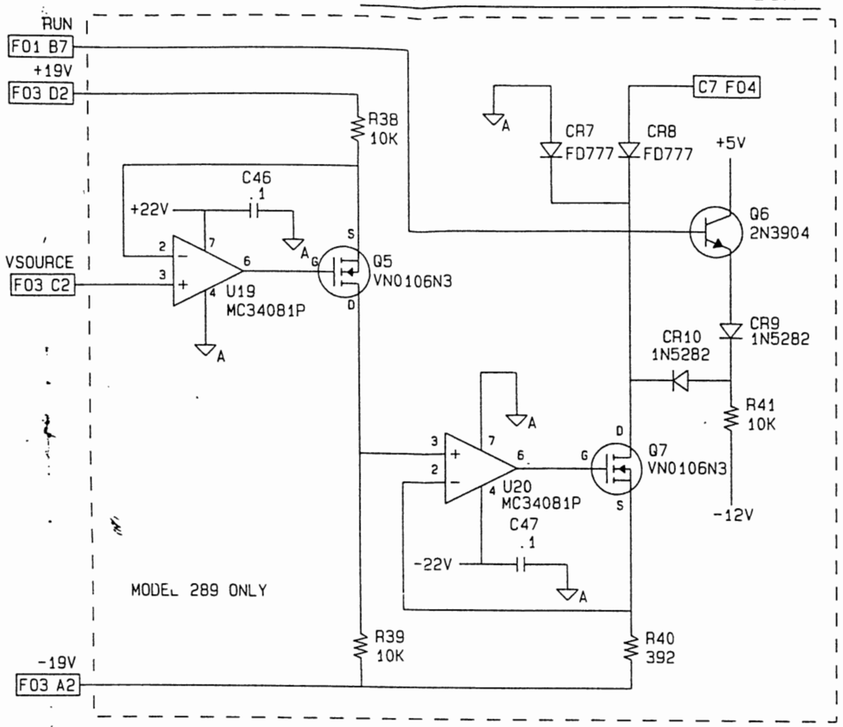

HIGH FREQUENCY COMPENSATION

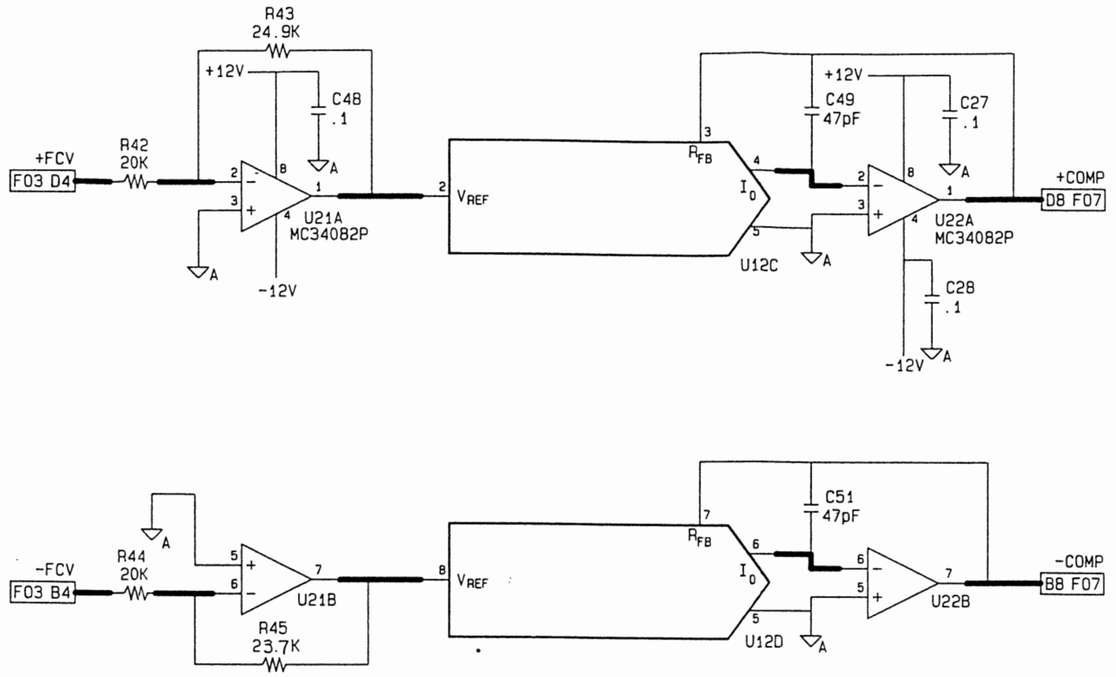

AUTO CALIBRATION

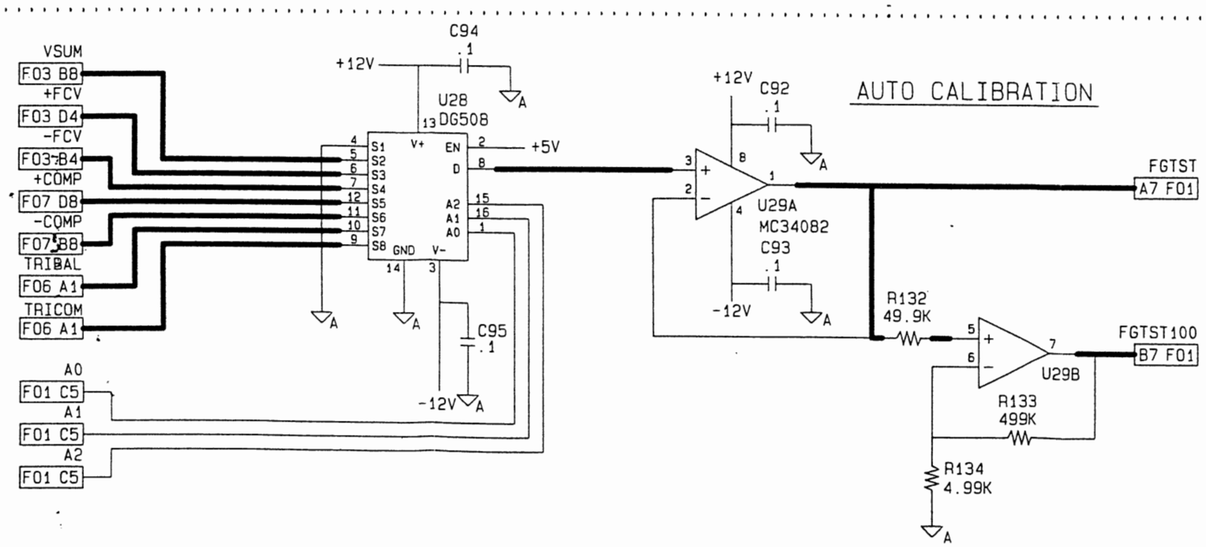

NOTE: UNLESS OTHERWISE SPECIFIED

REMOVE ALL BURRS AND BREAK SHARP EDGES	DRAWN M.KINGSLEY	DATE 1-19-88	WAVETEK SAN DIEGO, CALIFORNIA
MATERIAL	CHECKED		TITLE: SCHEMATIC FUNCTION GENERATOR
	PROJ. ENGR.		
FINISH WAVETEK PROCESS	RELEASE APPROV.		
DO NOT SCALE DRAWING	UNLESS OTHERWISE SPECIFIED DIMENSIONS ARE IN INCHES TOLERANCES ARE: FRACTIONS ± DECIMALS .XX ± .XXX ± ANGLES ±		SIZE D · FSCM NO. 23338 · DWG. NO. 0103-00-3004 · REV C · SCALE NONE · MODEL 1288 · SHEET 4 OF 7

0103-00-3004 C

THIS DOCUMENT CONTAINS PROPRIETARY INFORMATION AND DESIGN RIGHTS BELONGING TO WAVETEK AND MAY NOT BE REPRODUCED FOR ANY REASON EXCEPT CALIBRATION, OPERATION, AND MAINTENANCE WITHOUT WRITTEN AUTHORIZATION.

CAPACITANCE MULTIPLIER

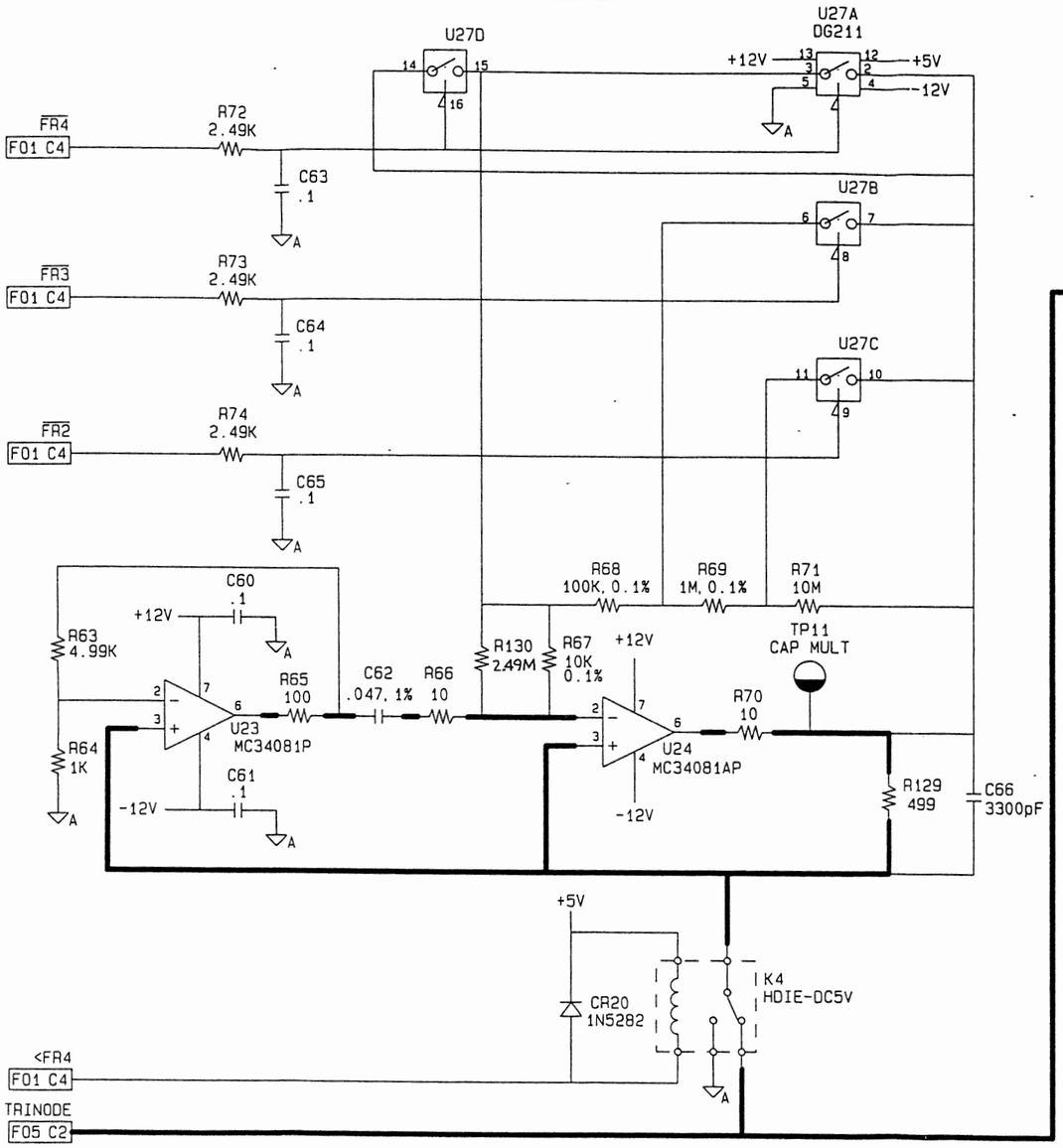

TRIANGLE BUFFER

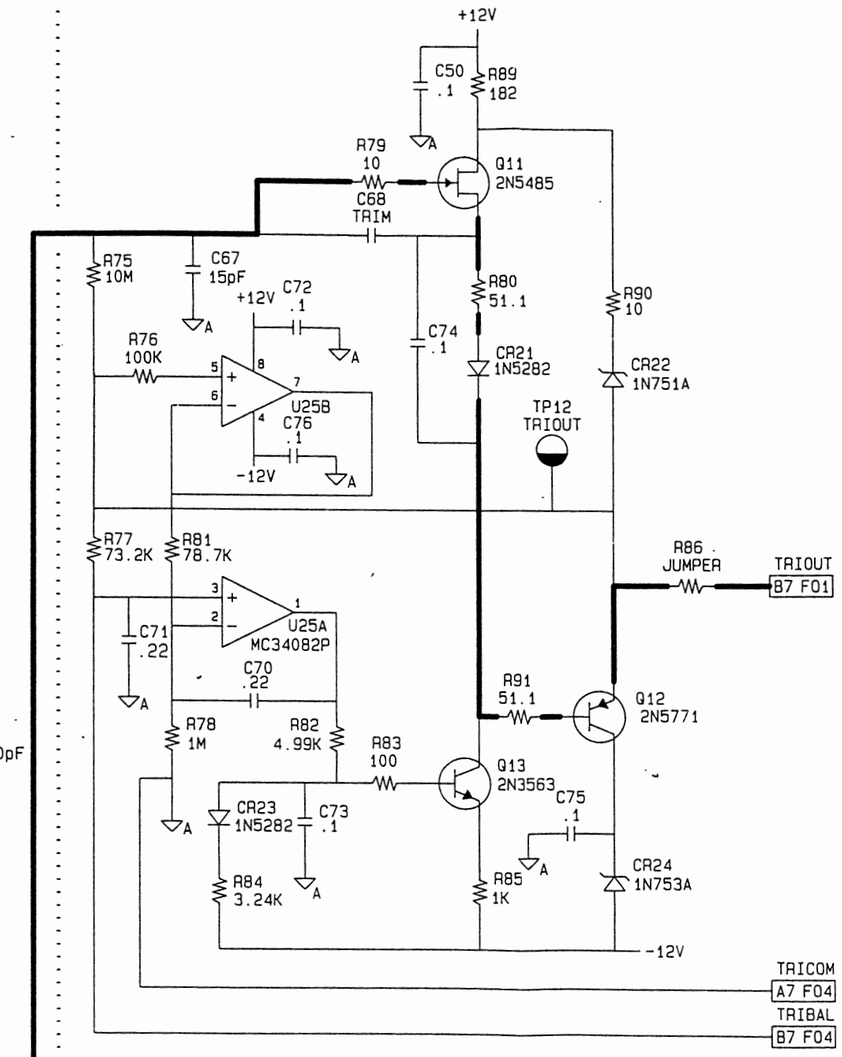

NOTE: UNLESS OTHERWISE SPECIFIED

REMOVE ALL BURRS AND BREAK SHARP EDGES	DRAWN M KINGSLEY	DATE 1-18-88	WAVETEK SAN DIEGO, CALIFORNIA
MATERIAL	CHECKED		TITLE: SCHEMATIC FUNCTION GENERATOR
FINISH WAVETEK PROCESS	PROJ. ENGR.		
	RELEASE APPROV.		
DO NOT SCALE DRAWING	UNLESS OTHERWISE SPECIFIED DIMENSIONS ARE IN INCHES TOLERANCES ARE: FRACTIONS DECIMALS ANGLES ± XX ± XXX ± ±		SIZE D · FSCM NO. 23338 · DWG. NO. 0103-00-3004 · REV C · SCALE NONE · MODEL 1288 · SHEET 6 OF 7

0103-00-3004 C

THIS DOCUMENT CONTAINS PROPRIETARY INFORMATION AND DESIGN RIGHTS BELONGING TO WAVETEK AND MAY NOT BE REPRODUCED FOR ANY REASON EXCEPT CALIBRATION, OPERATION, AND MAINTENANCE WITHOUT WRITTEN AUTHORIZATION.

REV	ECO	BY	DATE	APP

+12V
-12V
ISWITCH+ F03 C2
ISWITCH- F03 B2
+COMP F04 D1
-COMP F04 C1
VTRIBAL F01 C7
TRIOUT F07 B1
TRINODE C7 F05
SQWAVE C7 F01
R93 1.1K
R95 1.1K
R101 9.09K
R107 750
C80 .1
R109 249
CR33 1N753A
R138 4.99K
R111 249
R119 33.2
C87 .1
R112 33.2
R118 2.87K
R123 4.64K
C77 .1
R100 2.37K
U26B
Q17 2N4122
R110 21.5
Q19 2N5771
C84 .1
R113 10
Q21 2N3563
Q25 2N5462
R124 7.5K
C86 .1
CR25 FD777
CR26 FD777
Q20 2N5771
R94 1K
R120 825
Q24 2N3563
R125 27.4
TP13 REF SQR
CR27 1N5282
CR28 1N5282
CR43 1N5282
R137 316
R121 182
TP14 SWSQR
CR35 FD777
CR36 FD777
TP15 SQWAVE
C90 1.5pF
R140 39.2
R126 78.7
Q14 2N2369A
C79 .1
Q15 2N2369A
R99 9.09K
R92 100
CR37 FD777
CR38 FD777
CR41 FD777
CR42 FD777
C96 120pF
R87 10
C98 10pF
R102 100
R103 2.87K
C81 330pF
CR29 1N5282
CR30 1N5282
CR44 1N5282
R135 10K
R96 100
R136 10K
R115 301
TP16 AGND
R104 2.37K
Q18 2N3904
U26A MC34082P
R114 10
Q22 2N5771
Q26 2N5485
Q16 2N3563
R97 78.7
R46 33.2
Q23 2N3563
R127 7.5K
C88 .1
R122 2K
C82 .1
R105 1K
C89 TRIM
C78 .1
CR31 1N5282
R116 33.2
C85 .1
R106 9.09K
R98 1K
R108 750
CR32 1N753A
R117 392
R139 4.99K
CR34 1N753A
R128 4.64K
C83 .1
C91 .1

NOTE: UNLESS OTHERWISE SPECIFIED

REMOVE ALL BURRS AND BREAK SHARP EDGES	DRAWN M.KINGSLEY	DATE 5-18-88	WAVETEK SAN DIEGO, CALIFORNIA
MATERIAL	CHECKED		TITLE: SCHEMATIC FUNCTION GENERATOR
	PROJ. ENGR.		
FINISH WAVETEK PROCESS	RELEASE APPROV.		
DO NOT SCALE DRAWING	UNLESS OTHERWISE SPECIFIED DIMENSIONS ARE IN INCHES TOLERANCES ARE: FRACTIONS ± DECIMALS .XX ± .XXX ± ANGLES ±		SIZE D · FSCM NO. 23338 · DWG. NO. 0103-00-3004 · REV C · SCALE NONE · MODEL 1288 · SHEET 7 OF 7

0103-00-3004 C

DOCUMENT CONTAINS PROPRIETARY INFORMATION
DESIGN RIGHTS BELONGING TO WAVETEK AND MAY NOT
BE REPRODUCED FOR ANY REASON EXCEPT CALIBRATION,
OPERATION, AND MAINTENANCE WITHOUT WRITTEN AU-
THORIZATION.

REV	ECO	BY	DATE	APP

REFERENCE DESIGNATORS	PART DESCRIPTION	ORIG-MFGR-PART-NO	MFGR	WAVETEK NO.	QTY/PT
NONE	SCHEMATIC, FUNCTION GENERATOR	0103-00-3004	WVTK	0103-00-3004	1
NONE	PCA SUB ASSY, FUNCTION GEN BD 1288/288			1208-00-3004	1
2	PC BD EJECTOR	87-2-C	BRIT	2800-07-0032	2

WAVETEK PARTS LIST | TITLE: ASSY, FUNCTION GENERATOR BD | ASSEMBLY NO. 1100-00-3004 | REV G
PAGE 1

REFERENCE DESIGNATORS	PART DESCRIPTION	ORIG-MFGR-PART-NO	MFGR	WAVETEK NO.	QTY/PT
CR1 CR24 CR32 CR33 CR34	SL ZR 6.2V 5% 400MW (1N753A)	1N753A	ROHM	131.9620	5
C98	CAP, CER. 10PF, 100V, AXIAL	CAC02CD0100J100A	CORNG	1500-01-0006	1
C17	CAP, CER, 100PF, 100V, AXIAL	CAC02CD0101J100A	CORNG	1500-01-0106	1
C1 C12 C13 C14 C15 C16 C18 C2 C20 C21 C22 C23 C25 C27 C28 C3 C31 C33 C37 C39 C40 C41 C42 C44 C45 C48 C50 C54 C56 C59 C60 C61 C63 C64 C65 C72 C73 C74 C75 C76 C77 C78 C79 C80 C82 C83 C84 C85 C86 C87 C88 C9 C91 C92 C93 C94 C95	CAP, CER, MON, .1MF, 50V, AXIAL	CAC03Z5U104Z050A	CORNG	1500-01-0405	57
C96	CAP, CER, 120PF, 100V, 5%, AXIAL	CAC02C00121J100A	CORNG	1500-01-2106	1
C67	CAP, CER, 15PF, 100V, AXIAL	CAC02CD0150J100A	CORNG	1500-01-5006	1
C90	CAP, CER. 1.5PF, 100V, AXIAL	CAC02CD01R5J100A	CORNG	1500-01-5906	1
C29 C30 C32 C34	CAP, CER, 22PF, 100V, AXIAL	CAC02CD0220J100A	CORNG	1500-02-2006	4
C57 C58	CAP, CER. 220PF, 100V, AXIAL	CAC02CD0221J100A	CORNG	1500-02-2106	2

WAVETEK PARTS LIST | TITLE: PCA SUB ASSY, FUNCTION GEN BD 1288/288 | ASSEMBLY NO. 1208-00-3004 | REV A
PAGE 1

REFERENCE DESIGNATORS	PART DESCRIPTION	ORIG-MFGR-PART-NO	MFGR	WAVETEK NO.	QTY/PT
J7	CONN, HEADER, 24 PIN, RECPT, 2X12, .1 CTR, PCMT	102585-7	AMP	2100-02-0255	1
J6	CONN, HEADER, 40 PIN, RECPT, 2X20, .1 CTR PCMT	1-102585-2	AMP	2100-02-0256	1
TP1 TP10 TP16	TEST POINT, BLK, PC	TP-104-01-00	COMPO	2100-04-0054	3
TP11 TP12 TP13 TP14 TP15 TP2 TP3 TP4 TP5 TP6 TP7 TP8 TP9	TEST POINT, RED, PC	TP-104-01-02	COMPO	2100-04-0055	13
FB1 FB2 FB3 FB4 FB5	BALUN CORE, FERRITE, 680 OHMS	2943666671	FARIT	3100-00-0017	5
K1 K2 K3 K4	RELAY, 1 FORMC, 5V, .312H, .296W	HD1E-M-DC5V	ARDMT	4500-00-0034	4
R25 R26 R30 R31 R32 R33 R67	RES, MF, 1/8W, .1%, 10K	RN55E-1002B	MEPCO	4701-02-1002	7
R68	RES, MF, 1/8W, .1%, 100K	RN55E-1003B	MEPCO	4701-02-1003	1
R69	RES, MFLM, 1/8W, 0.1%, 1.0M	CMF-55-1004BT-9	DALE	4701-02-1004	1
R36 R37	RES, MF, 1/8W, .1%, 1.5K	RN55E-1501B	CORNG	4701-02-1501	2
R102 R65 R83 R92 R96	RES, MF, 1/8W, 1%, 100	RN55D-1000F	TRW	4701-03-1000	5
R105 R64 R85 R94 R98	RES, MF, 1/8W, 1%, 1K	RN55D-1001F	TRW	4701-03-1001	5

WAVETEK PARTS LIST | TITLE: PCA SUB ASSY, FUNCTION GEN BD 1288/288 | ASSEMBLY NO. 1208-00-3004 | REV A
PAGE 3

REFERENCE DESIGNATORS	PART DESCRIPTION	ORIG-MFGR-PART-NO	MFGR	WAVETEK NO.	QTY/PT
C10 C70 C71	CAP, CER, .22MF, 25V	CW30C224K	CRL	1500-02-2409	3
C19 C81	CAP, CER, 330PF, 100V, AXIAL	CAC02CD0331J100A	CORNG	1500-03-3106	2
C11 C66	CAP, CER, 3300PF, 100V, 20%, AXIAL	CAC02X7R332M100A	CORNG	1500-03-3206	2
C35 C36 C49 C51	CAP, CER. 47PF, 100V, AXIAL	CAC02CD0470J100A	CORNG	1500-04-7006	4
C55	CAP, CER, 4700PF, 50V, 2%	592CCD04720050E	SPRAG	1500-04-7213	1
C24 C26	CAP, CER, 680PF, 100V, AXIAL	CAC02CD0681J100A	CORNG	1500-06-8106	2
C6 C8	CAP, ELECT, 100MF, 35V RADIAL LEAD, SP .20	NRE101M35V8X11	NIC	1500-31-0102	2
C4 C5 C7	CAP, ELECT, 100MF, 25V, RADIAL LEAD-SP SIZE	NRE101M25V6.3X11	NIC	1500-31-0122	3
C38 C43	CAP, ELECT. 22MF, 25V, RADIAL	SRA25VB22RM6X7LL	UNCON	1500-32-2002	2
C53 C62	CAP, MYLR, .047MF, 50V	C5R473F	ELPAC	1500-44-7303	2
C52	CAP, MYLR, .47MF, 50V	C5R474F	ELPAC	1500-44-7403	1
1	PCB, FUNCTION GENERATOR BD	1700-00-3004	WVTK	1700-00-3004	1

WAVETEK PARTS LIST | TITLE: PCA SUB ASSY, FUNCTION GEN BD 1288/288 | ASSEMBLY NO. 1208-00-3004 | REV A
PAGE 2

REFERENCE DESIGNATORS	PART DESCRIPTION	ORIG-MFGR-PART-NO	MFGR	WAVETEK NO.	QTY/PT
R135 R136 R28 R3 R35 R47 R5	RES, MF, 1/8W, 1%, 10K	RN55D-1002F	TRW	4701-03-1002	7
R11 R12 R131 R48 R76	RES, MF, 1/8W, 1%, 100K	RN55D-1003F	TRW	4701-03-1003	5
R78	RES, MF, 1/8W, 1%, 1M	RN55D-1004F	TRW	4701-03-1004	1
R21 R23 R50 R56 R59 R71 R75	RES, MF, 1/8W, 10M	5033YD10M000F	MEPCO	4701-03-1005	7
R113 R114 R29 R34 R66 R70 R79 R87 R90	RES, MF, 1/8W, 1%, 10	5043ED10R100F	MEPCO	4701-03-1009	9
R93 R95	RES, MF, 1/8W, 1%, 1.1K	RN55D-1101F	TRW	4701-03-1101	2
R141	RES, MF, 1/8W, 1%, 11K	RN55D-1102F	TRW	4701-03-1102	1
R55 R58 R62	RES, MF, 1/8W, 1%, 15K	RN55D-1502F	TRW	4701-03-1502	3
R121 R89	RES, MF, 1/8W, 1%, 182	RN55D-1820F	TRW	4701-03-1820	2
R122	RES, MF, 1/8W, 1%, 2K	RN55D-2001F	TRW	4701-03-2001	1
R42 R44	RES, MF, 1/8W, 1%, 20K	RN55D-2002F	TRW	4701-03-2002	2
R110	RES, MF, 1/8W, 1%, 21.5	RN55D-21R5F	TRW	4701-03-2159	1
R100 R104	RES, MF, 1/8W, 1%, 2.37K	RN55D-2371F	TRW	4701-03-2371	2
R45	RES, MF, 1/8W, 1%, 23.7K	RN55D-2372F	TRW	4701-03-2372	1
R109 R111	RES, MF, 1/8W, 1%, 249	RN55D-2490F	TRW	4701-03-2490	2
R1 R13 R2 R53 R6 R60 R7 R72 R73 R74	RES, MF, 1/8W, 1%, 2.49K	RN55D-2491F	TRW	4701-03-2491	10

WAVETEK PARTS LIST | TITLE: PCA SUB ASSY, FUNCTION GEN BD 1288/288 | ASSEMBLY NO. 1208-00-3004 | REV A
PAGE 4

NOTE: UNLESS OTHERWISE SPECIFIED

REMOVE ALL BURRS AND BREAK SHARP EDGES	DRAWN	DATE	WAVETEK SAN DIEGO, CALIFORNIA
MATERIAL	CHECKED		TITLE: PARTS LIST FUNCTION GENERATOR BOARD
WAVETEK PROCESS	PROJ. ENGR.		
DO NOT SCALE DRAWING	RELEASE APPROV.		SIZE D · FSCM NO. 23338 · DWG. NO. 1100-00-3004 · REV G
	UNLESS OTHERWISE SPECIFIED DIMENSIONS ARE IN INCHES TOLERANCES ARE: FRACTIONS ± · DECIMALS .XX ± .XXX ± · ANGLES ±		SCALE · MODEL 288 · SHEET 1 OF 2

THIS DOCUMENT CONTAINS PROPRIETARY INFORMATION AND DESIGN RIGHTS BELONGING TO WAVETEK AND MAY NOT BE REPRODUCED FOR ANY REASON EXCEPT CALIBRATION, OPERATION, AND MAINTENANCE WITHOUT WRITTEN AUTHORIZATION.

REV	ECO	BY	DATE
A02	ECL 0001	MG	2-3-88
A03	ECL 0005	MG	3-8-88
A04	ECL 0013	MK	3-7-88
A05	ECL 0043	MK	3-28-88
B	ERO 9718 RERELEASE ONLY NO CHANGE FROM A05	MK	5-2-88 MG
C	ECL # 9780	MK	6-22-88
D	ECO # 9913	MS	9/14/89
E	ECO# 89-090	BG	2/27/89
F	89-261	BG	7/25/89
G	89-424	BG	7/25/89

REF ROLL PINS SUPPLIED WITH ITEM NO. , 2PLCS EACH END, 4 TOTAL

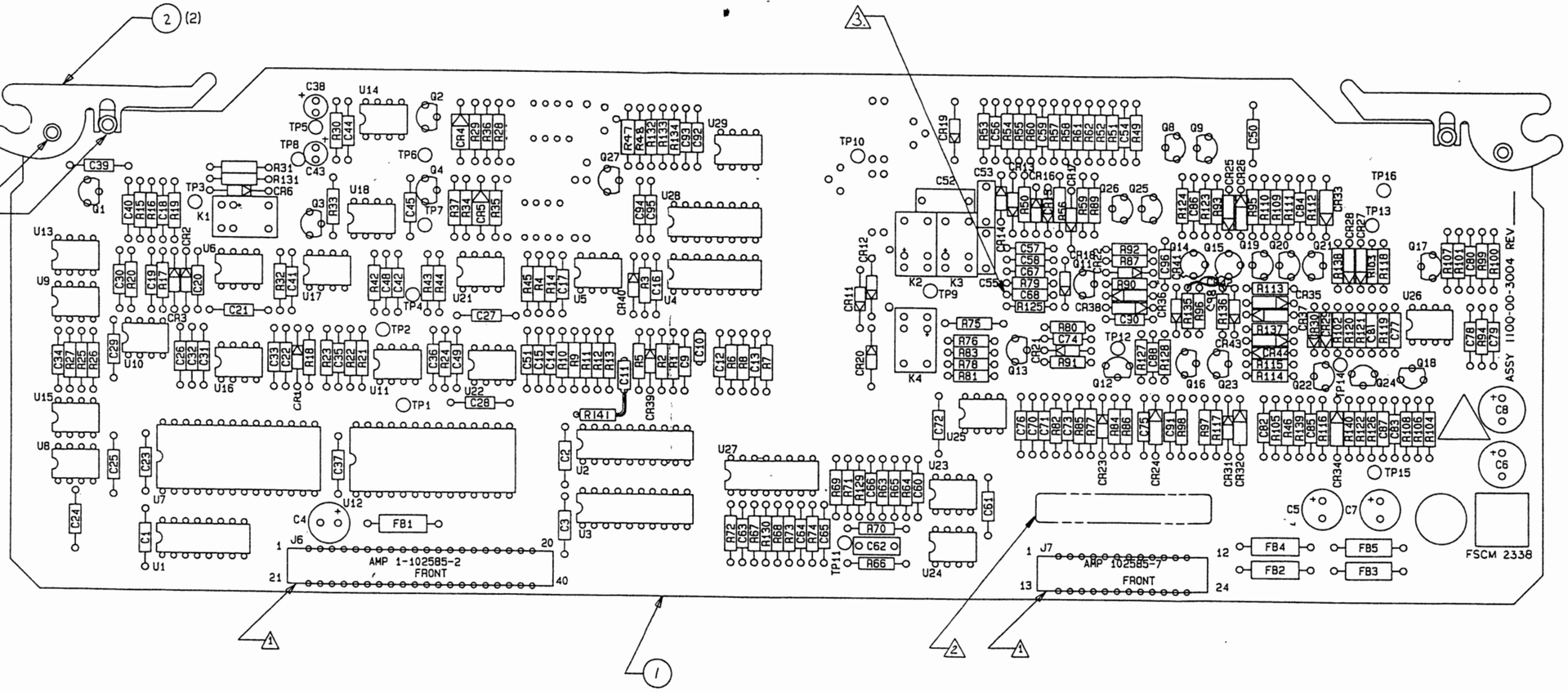

3 C68 IS A TRIM VALUE.

2 INSTALL SERIAL NO. LABLE WHERE SHOWN.

1 MANUFACTURER'S MARKING INDICATES CORRECT ORIENTATION OF CONNECTOR.

NOTE: UNLESS OTHERWISE SPECIFIED

SEE SEPARATE PARTS LIST PL1100-00-3004

REMOVE ALL BURRS AND BREAK SHARP EDGES	DRAWN M. KINGSLET	DATE 11-25-88	WAVETEK SAN DIEGO, CALIFORNIA
MATERIAL	CHECKED	6/1/89	TITLE ASSEMBLY FUNCTION GENERATOR BOARD
	PROJ. ENGR.	6/2/89	
FINISH WAVETEK PROCESS	RELEASE APPROV. R86	6/3/89	
DO NOT SCALE DRAWING	UNLESS OTHERWISE SPECIFIED DIMENSIONS ARE IN INCHES TOLERANCES ARE: FRACTIONS DECIMALS ANGLES .XX ±.02 .XXX ±.010 ±1°		SIZE D · FSCM NO. 23338 · DWG. NO. 1100-00-3004 · REV G · SCALE 2:1 · MODEL 1288 · SHEET 1 OF 1

1100-00-3004 F

THIS DOCUMENT CONTAINS PROPRIETARY INFORMATION WITH DESIGN RIGHTS BELONGING TO WAVETEK AND MAY NOT BE REPRODUCED FOR ANY REASON EXCEPT CALIBRATION, OPERATION, AND MAINTENANCE WITHOUT WRITTEN AUTHORIZATION

REV	ECO	BY	DATE	APP
01	ECL CONTROL	MG	2-10-88	
02	ECL # 0008	MG	2-17-88	
03	ECL # 0021	MG	2-22-88	
04	ECL # 0027	SC	3-14-88	
06	ECL# 0037	SC	3-14-88	
A	RELEASE ONLY NO CHANGE ERO # 9703	J.C. 9/14/88	4/3/89	
B	ECO # 9845	M.S.	11/15/89	

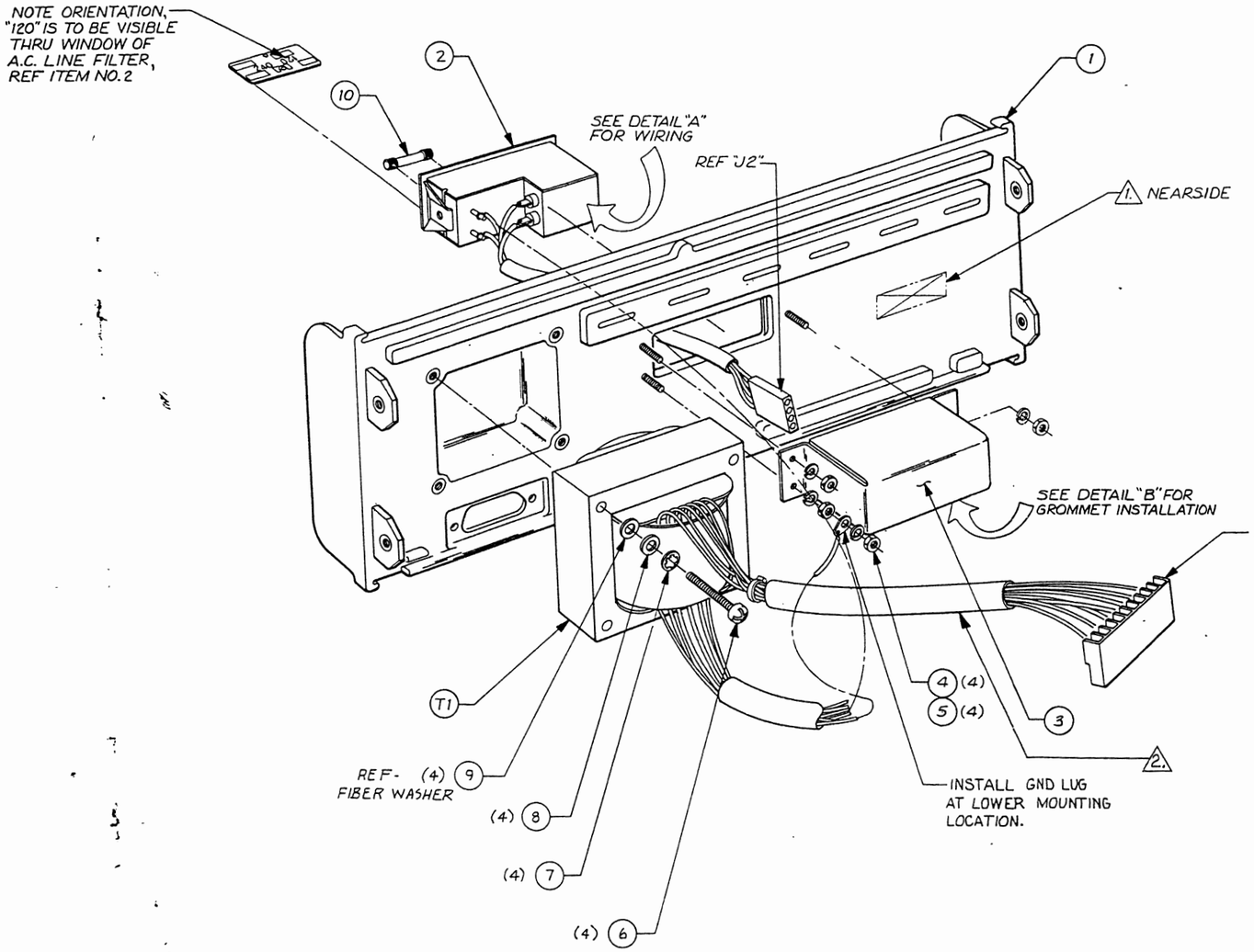

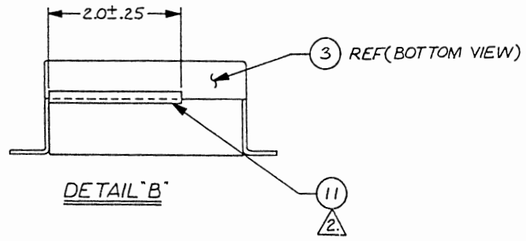

DETAIL "B"

WIRE LIST

XFMR WIRE COLOR	LINE FILTER TERM. MARKING
VIOLET	A
BLACK	C
GRAY	D
WHT/BLK	E
WHT/GRAY	F

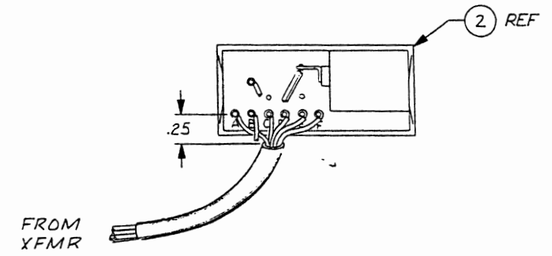

DETAIL "A"
XFMR WIRE HOOKUP

INSTALL GROMMET 3200-06-0079 (LESIG PART 924) OR 3200-06-0053 MINOR RUBBER PART NO. ZX-4064) OR EQUIV. TO SHIELD (ITEM 3) WITH ADHESIVE 1600-03-0013 (LOCTITE PART NO. 414) OR EQUIV.

MARK ASSEMBLY NO. "1101-00-3007", LATEST REV, FSCM 23338, PER-MIL-STD-130, APPROX WHERE SHOWN.

NOTE: UNLESS OTHERWISE SPECIFIED

SEE SEPARATE PARTS LIST

REMOVE ALL BURRS AND BREAK SHARP EDGES	DRAWN CHERMACK	DATE 11-11-87	WAVETEK SAN DIEGO, CALIFORNIA
MATERIAL	CHECKED	2-17-88	TITLE: ASSEMBLY, REAR PANEL
	PROJ. ENGR.	2-17-88	
FINISH WAVETEK PROCESS	RELEASE APPROV.	2/22/88	
DO NOT SCALE DRAWING	UNLESS OTHERWISE SPECIFIED DIMENSIONS ARE IN INCHES TOLERANCES ARE: FRACTIONS ± DECIMALS .XX ± .XXX ± ANGLES ±		SIZE D; FSCM NO. 23338; DWG. NO. 1101-00-3007; REV B; SCALE NONE; MODEL 1288; SHEET 1 OF 1

THIS DOCUMENT CONTAINS PROPRIETARY INFORMATION AND DESIGN RIGHTS BELONGING TO WAVETEK AND MAY NOT BE REPRODUCED FOR ANY REASON EXCEPT CALIBRATION, OPERATION, AND MAINTENANCE WITHOUT WRITTEN AUTHORIZATION.

REV	ECO	BY	DATE

REFERENCE DESIGNATORS	PART DESCRIPTION	ORIG-MFGR-PART-NO	MFGR	WAVETEK NO.	QTY/PT
R43	RES, MF, 1/8W, 1%, 24.9K	RN55D-2492F	TRW	4701-03-2492	1
R130 R22 R24	RES, MFLM, 1/8W, 2.49M, 1%	CMF-552494F T-8	DALE	4701-03-2494	3
R125	RES, MF, 1/8W, 1%, 27.4	RN55D-27R4F	TRW	4701-03-2749	1
R103 R118	RES, MF, 1/8W, 1%, 2.87K	RN55D-2871F	TRW	4701-03-2871	2
R115	RES, MF, 1/8W, 1%, 301	RN55D-3010F	TRW	4701-03-3010	1
R137	RES, MF, 1/8W, 1%, 316	RN55D-3160F	TRW	4701-03-3160	1
R84	RES, MF, 1/8W, 1%, 3.24K	RN55D-3241F	TRW	4701-03-3241	1
R32	RES, MF, 1/8W, 1%, 33.2K	RN55D-3322F	TRW	4701-03-3322	1
R112 R116 R119 R46	RES, MF, 1/8W, 1%, 33.2	RN55D-33R2F	TRW	4701-03-3329	4
R117	RES, MF, 1/8W, 1%, 392	RN55D-3920F	TRW	4701-03-3920	1
R140	RES, MF, 1/8W, 1%, 39.2	RN55D-39R2F	TRW	4701-03-3929	1
R10 R14 R9	RES, MF, 1/8W, 1%, 4.02K	RN55D-4021F	TRW	4701-03-4021	3
R123 R128	RES, MF, 1/8W, 1%, 4.64K	RN55D-4641F	TRW	4701-03-4641	2
R129 R18 R57 R61	RES, MF, 1/8, 1%, 499	RN55D-4990F	TRW	4701-03-4990	4
R134 R138 R139 R20 R27 R49 R63 R82	RES, MF, 1/8W, 1%, 4.99K	RN55D-4991F	TRW	4701-03-4991	8

WAVETEK PARTS LIST | TITLE: PCA SUB ASSY, FUNCTION GEN BD 1288/288 | ASSEMBLY NO. 1208-00-3004 | REV A

REFERENCE DESIGNATORS	PART DESCRIPTION	ORIG-MFGR-PART-NO	MFGR	WAVETEK NO.	QTY/PT
CR22	DIODE, ZENOR, 5.1V, 500MW, QIB, IN751A	1N751A	FAIR	4801-01-0751	1
CR11 CR12 CR13 CR14 CR15 CR16 CR17 CR18 CR19 CR2 CR20 CR21 CR23 CR27 CR28 CR29 CR3 CR30 CR31 CR39 CR40 CR43 CR44 CR6	DIODE, HIGH CONDUCTANCE, ULTRA FAST	1N5282	FAIR	4801-01-5282	24
CR25 CR26 CR35 CR36 CR37 CR38 CR41 CR42	DIODE, ULTRA FAST	FD777	FAIR	4807-02-0777	8
Q14 Q15	TRANS, SILICON, PLANAR, EPITAXIAL, NPN, TO-18	2N2369A	MOT	4901-02-3691	2
Q13 Q16 Q21 Q23 Q24	TRANS, NPN, TO-92	2N3563	FAIR	4901-03-5630	5
Q18 Q27	TRANS 2N3904 NPN GENERAL PURPOSE TO-92	2N3904	FAIR	4901-03-9040	2
Q17 Q8 Q9	TRANS, GENERAL PURPOSE, PNP, TO-92	2N4122	NSC	4901-04-1220	3
Q25 Q3	TRANS, P-CHANNEL JFETS	2N5462	MOT	4901-05-4620	2
Q1 Q11 Q26	TRANS, N-CHANNEL JFETS	2N5485	MOT	4901-05-4850	3
Q12 Q19 Q20 Q22	TRANS 2N5771 PNP SWITCH TO-92	2N5771	NSC	4901-05-7710	4
Q4	TRANS, FET N CHANNEL	VN0106N3	SUPER	4902-01-0600	1

WAVETEK PARTS LIST | TITLE: PCA SUB ASSY, FUNCTION GEN BD 1288/288 | ASSEMBLY NO. 1208-00-3004 | REV A

REFERENCE DESIGNATORS	PART DESCRIPTION	ORIG-MFGR-PART-NO	MFGR	WAVETEK NO.	QTY/PT
R132 R17	RES, MF, 1/8W, 1%, 49.9K	RN55D-4992F	TRW	4701-03-4992	2
R133	RES, MF, 1/8W, 1%, 499K	RN55D-4993F	TRW	4701-03-4993	1
R80 R91	RES, MF, 1/8W, 1%, 51.1	RN55D-51R1F	TRW	4701-03-5119	2
R19	RES, MF, 1/8W, 1%, 604	RN55D-6040F	TRW	4701-03-6040	1
R107 R108	RES, MF, 1/8W, 1%, 750	RN55D-7500F	TRW	4701-03-7500	2
R124 R127 R16 R51	RES, MF, 1/8W, 1%, 7.5K	RN55D-7501F	TRW	4701-03-7501	4
R81	RES, MF, 1/8W, 1%, 78.7K	RN55D-7872F	TRW	4701-03-7872	1
R126 R97	RES, MF, 1/8W, 1%, 78.7	RN55D-78R7F	TRW	4701-03-7879	2
R4	RES, MF, 1/8W, 1%, 8.06K	RN55D-8061F	TRW	4701-03-8061	1
R120	RES, MF, 1/8W, 1%, 825	RN55D-8250F	TRW	4701-03-8250	1
R101 R106 R15 R99	RES, MF, 1/8W, 1%, 9.09K	RN55D-9091F	TRW	4701-03-9091	4
R54	RES, MF, 1/8W, 1%, 90.9	RN55D-90R9F	TRW	4701-03-9099	1
R86	RES, 0 OHM JUMPER	JP02T68Q	ROHM	4799-00-0087	1
R77 R8	RES, MFLM, 1/8W, 1%, 73.2K	5033RE7322F	MEPCO	4799-00-0234	2
CR4 CR5	DIODE, ZENER, 3.3V, 5% TOL, 500MW, Q/B, IN746A	1N746A	FAIR	4801-01-0746	2

WAVETEK PARTS LIST | TITLE: PCA SUB ASSY, FUNCTION GEN BD 1288/288 | ASSEMBLY NO. 1208-00-3004 | REV A

REFERENCE DESIGNATORS	PART DESCRIPTION	ORIG-MFGR-PART-NO	MFGR	WAVETEK NO.	QTY/PT
Q2	TRANS, FET P CHANNEL	VP0106N3	SUPER	4902-01-0601	1
U28	MUX, CMOS, D 4C, 8 CHAN/DUAL 4 CHAN ANAL	DG508ACJ	SLCON	7000-05-0800	1
U13 U14 U17 U18	OP AMP, LOW DRIFT, LOW OFFSET	LT1001CN8	LINTE	7000-10-0180	4
U12 U7	DAC, QUAD 8 BIT, MULT W/MEM, CMOS	DAC8408GP	PMI	7000-84-0800	2
U10 U15 U16 U23 U9	OP AMP, HI SLEW RTE, WIDEBND, JFET, STD	MC34081P	MOT	7003-40-8100	5
U24 U5 U8	OP AMP, HI SLEW RTE, WIDEBND, JFET, PRIME	MC34081AP	MOT	7003-40-8101	3
U11 U21 U22 U25 U26 U29 U6	OP AMP, HI SLEW RTE, WIDEBND, JFET DUAL	MC34082P	MOT	7003-40-8200	7
U27 U4	SW, QUAD ANALOG, CMOS	DG211CJ	SLCON	8000-02-1100	2
U1	DECODER/DEMUX, 3 TO 8 LINE	SN74ALS138N	TI	8007-41-3800	1
U2 U3	FLIP-FLOP, OCTAL D	SN74ALS574N	TI	8007-45-7450	2

WAVETEK PARTS LIST | TITLE: PCA SUB ASSY, FUNCTION GEN BD 1288/288 | ASSEMBLY NO. 1208-00-3004 | REV A

NOTE UNLESS OTHERWISE SPECIFIED

REMOVE ALL BURRS AND BREAK SHARP EDGES	DRAWN	DATE	WAVETEK SAN DIEGO, CALIFORNIA
MATERIAL	CHECKED		TITLE: PARTS LIST FUNCTION GENERATOR BOARD
	PROJ. ENGR.		
FINISH WAVETEK PROCESS	RELEASE APPROV.		
DO NOT SCALE DRAWING	UNLESS OTHERWISE SPECIFIED DIMENSIONS ARE IN INCHES TOLERANCES ARE: FRACTIONS ± DECIMALS XX ± XXX ± ANGLES ±		SIZE D | FSCM NO. 23338 | DWG. NO. 1100-00-3004 | REV G; SCALE | MODEL 288 | SHEET 2 OF 2

THIS DOCUMENT CONTAINS PROPRIETARY INFORMATION AND DESIGN RIGHTS BELONGING TO WAVETEK AND MAY NOT BE REPRODUCED FOR ANY REASON EXCEPT CALIBRATION, OPERATION, AND MAINTENANCE WITHOUT WRITTEN AUTHORIZATION.

REV	ECO	BY	DATE	APP

REFERENCE DESIGNATORS	PART DESCRIPTION	DRIG-MFGR-PART-NO	MFGR	WAVETEK NO.	QTY/PT
T1	TRANSFORMER ASSEMBLY	1204-00-3009	WVTK	1204-00-3009	1
2	CABLE ASSY, LINE FILTER	1207-00-3011	WVTK	1207-00-3011	1
1	PANEL, REAR, PAINTED	1400-02-3242	WVTK	1400-02-3242	1
3	SHIELD, AC CONN	1400-02-3463	WVTK	1400-02-3463	1
10	FUSE, 3/4A, 250V, S-B	313-750	LITFU	2400-05-0011	1
4	NUT, HEX, 4-40	MS35649-244	COML	2800-14-4100	4
9	WASHER, #8 FIBER BIN 470	#8 FIBER WASHER	CMRCL	2800-28-8000	4
5	WASHER, LOCK REG, S/S #4	MS 35338-135	CMRCL	2800-45-4000	4
8	WASHER, #8, FLT, SS, THK .050, ID .174, OD .375	2800-46-8000	CMRCL	2800-46-8000	4
6	SCREW, 8-32 X 1 5/8, UNC2A, PHLP, PH, SS	2800-48-8126	CMRCL	2800-48-8126	4
7	WASHER, #8, INT TOOTH, LOCK, SS	2800-56-0002	CMRCL	2800-56-0002	4
11	EXTRU, RUBBER, U CHNL, 1/16 INSIDE, 1/8 OUTSIDE	924	LESIG	3200-06-0079	2

WAVETEK PARTS LIST	TITLE: ASSY, REAR PANEL	ASSEMBLY NO. 1101-00-3007	REV B

PAGE 1

NOTE: UNLESS OTHERWISE SPECIFIED

REMOVE ALL BURRS AND BREAK SHARP EDGES	DRAWN	DATE	WAVETEK SAN DIEGO, CALIFORNIA
MATERIAL	CHECKED		TITLE: PARTS LIST REAR PANEL
	PROJ. ENGR.		
FINISH WAVETEK-PROCESS	RELEASE APPROV.		
DO NOT SCALE DRAWING	UNLESS OTHERWISE SPECIFIED DIMENSIONS ARE IN INCHES TOLERANCES ARE: FRACTIONS DECIMALS ANGLES = .XX ± .XXX ± ±		SIZE D | FSCM NO. 23338 | DWG. NO. 1101-00-3007 | REV B; SCALE | MODEL 288 | SHEET 1 OF 1