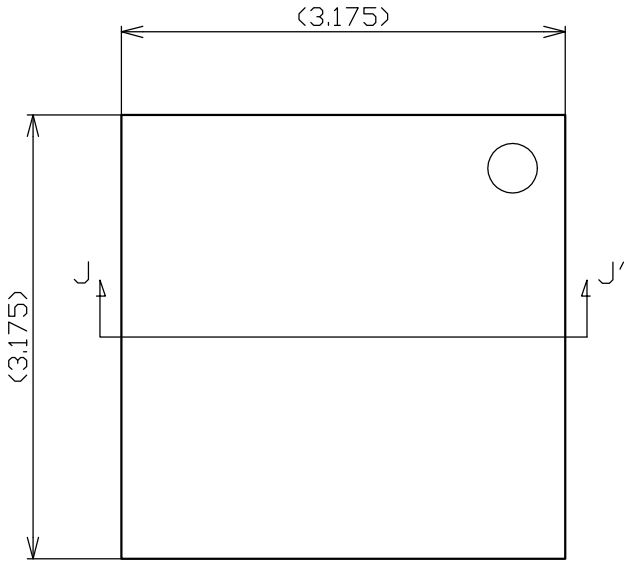

TOP VIEW

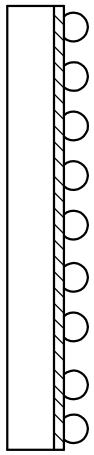

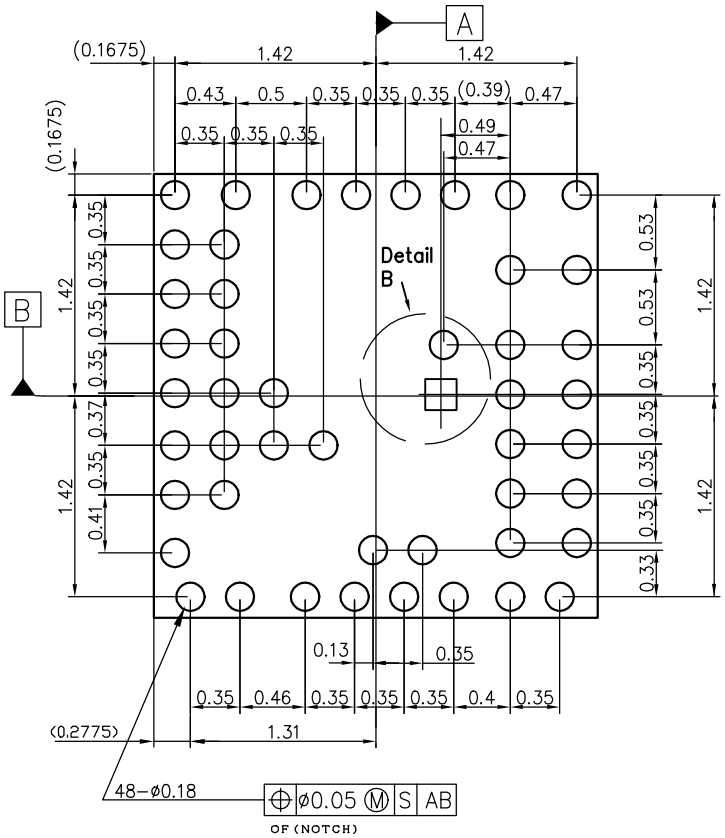

BOTTOM VIEW

J-J' Cross section

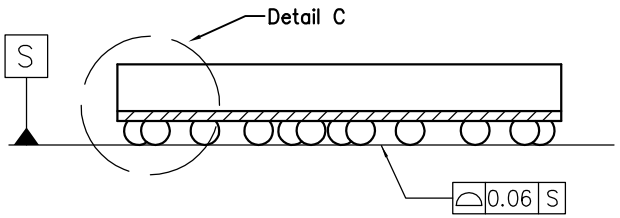

DETAIL B

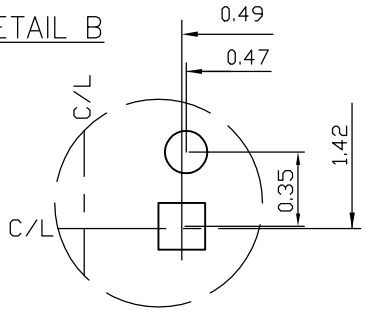

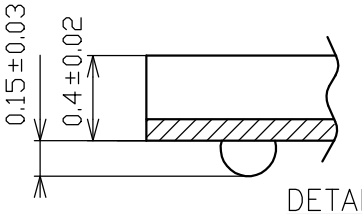

DETAIL C

Note
1. Terminal pitch is defined by terminal center to center value.
2. Outer dimension is defined by center lines between scribe lines.
3. Referenced Casio Micronics Co., Ltd. Dwg. # 050527-01.

-DRAWING NOT TO SCALE-

DALLAS SEMICONDUCTOR MAXIM

TITLE: PACKAGE OUTLINE, WLP (MAX 2160)			
APPROVAL	DOCUMENT CONTROL NO. 21-0173	REV. A	1/1