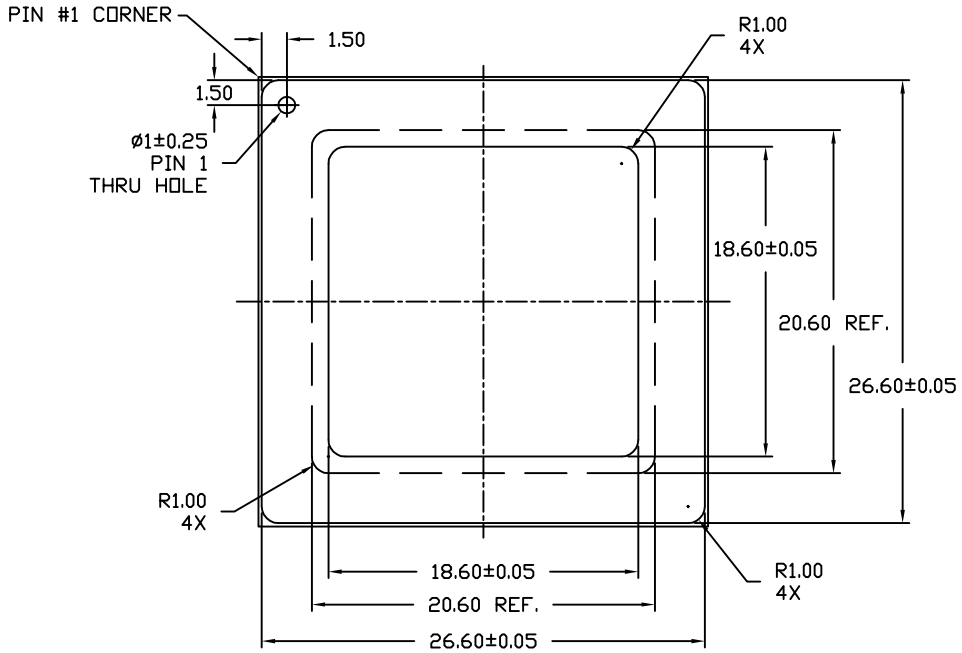

TOP VIEW

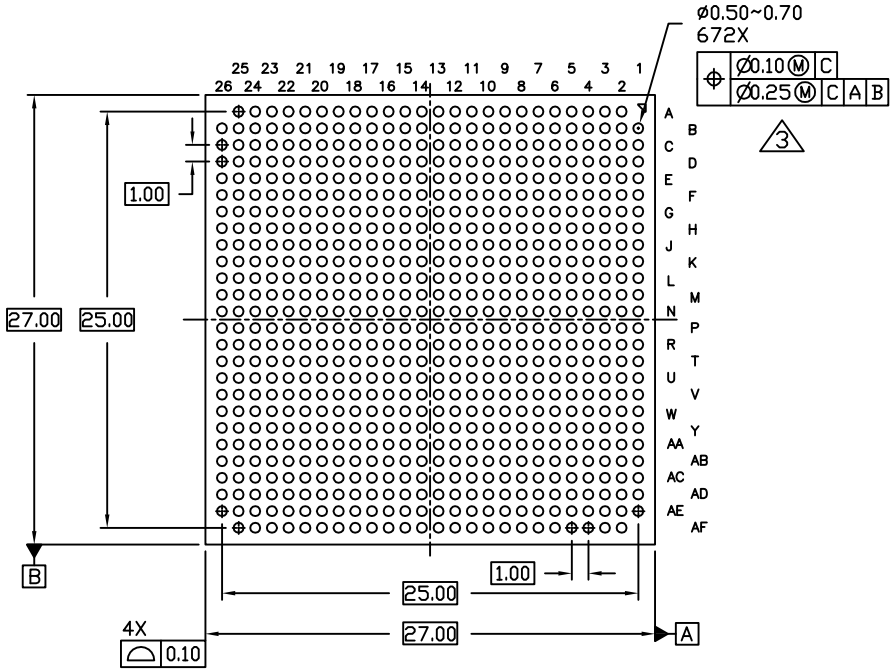

BOTTOM VIEW

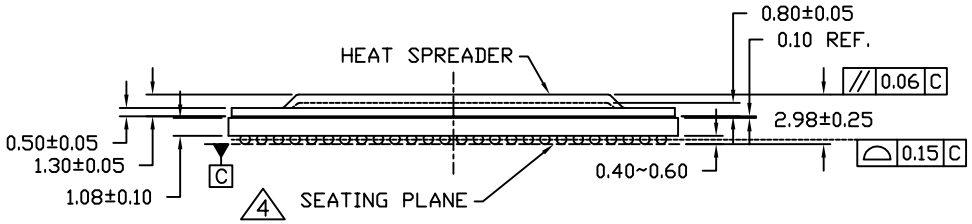

NOTES:

1. ALL DIMENSIONS ARE IN MILLIMETERS UNLESS OTHERWISE SPECIFIED.
2. ALL DIMENSIONS AND TOLERANCES CONFORM TO ANSI Y14.5M-1982.
3. DIMENSION "b" IS MEASURED AT THE MAXIMUM SOLDER BALL DIAMETER, PARALLEL TO PRIMARY DATUM 'C'.
4. PRIMARY DATUM 'C' AND SEATING PLANE ARE DEFINED BY THE SPHERICAL CROWNS OF THE SOLDER BALLS.
5. MATERIAL MUST COMPLY WITH BANNED AND RESTRICTED SUBSTANCES SPEC #10-0131.
6. ALL DIMENSIONS APPLY TO PbFREE (+) PKG. CODE.
7. PACKAGE CODE: X67277F-1

—DRAWING NOT TO SCALE—

MAXIM

TITLE:
PACKAGE OUTLINE, 672 BALLS HSBGAF, 27x27x2.98mm, 1.0mm PITCH, 6 LAYER

APPROVAL	DOCUMENT CONTROL NO.	REV.	
	21-0609	B	1/1