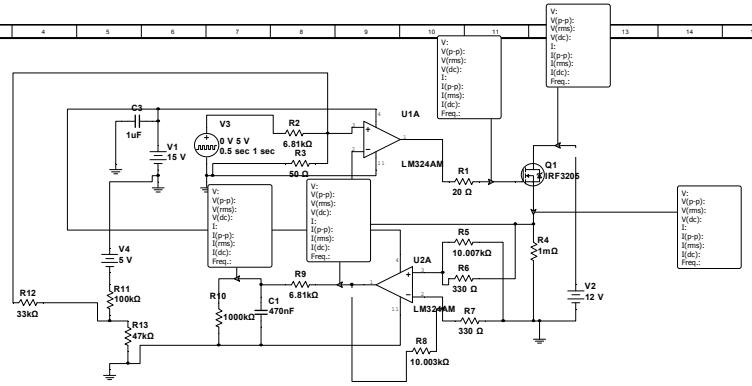
C3
1uF
V1
15 V
V3
0 V 5 V
0.5 sec 1 sec
R2
6.81kΩ
R3
50 Ω
U1A
LM324AM
R1
20 Ω
Q1
IRF3205
V:
V(p-p):
V(rms):
V(dc):
I:
I(p-p):
I(rms):
I(dc):
Freq.:
V4
5 V
R12
33kΩ
R11
100kΩ
R13
47kΩ
R10
1000kΩ
C1
470nF
R9
6.81kΩ
U2A
LM324AM
R5
10.007kΩ
R6
330 Ω
R7
330 Ω
R8
10.003kΩ
R4
1mΩ
V2
12 V