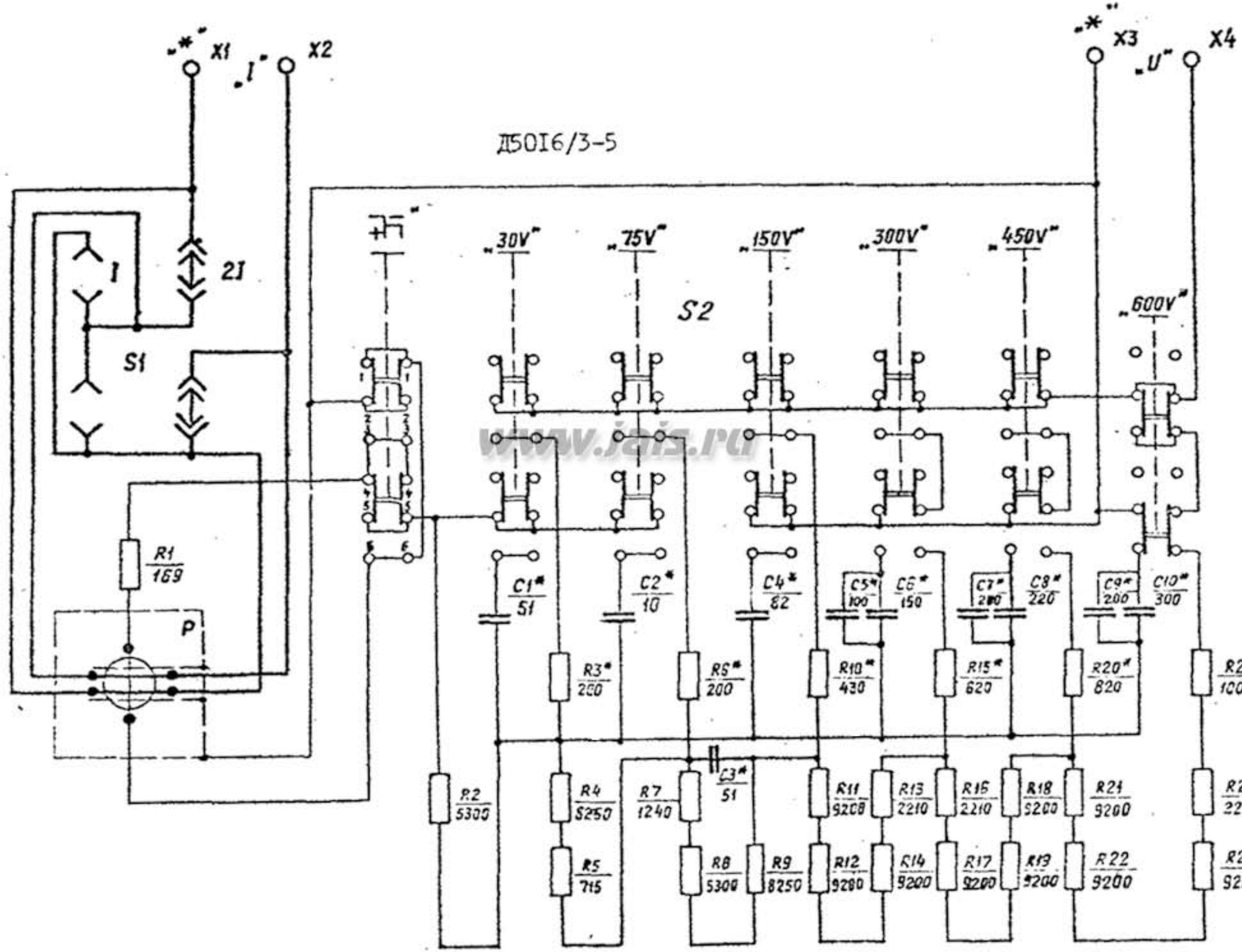

Д50I6/3-5
"*" X1
"I" X2
"*" X3
"U" X4
I
2I
S1
R1 169
P
"+-"
"30V"
"75V"
"150V"
"300V"
"450V"
"600V"
S2
C1* 51
C2* 10
C4* 82
C5* 100
C6* 150
C7* 200
C8* 220
C9* 200
C10* 300
R3* 200
R6* 200
R10* 430
R15* 620
R20* 820
R23* 1000
R2 5300
R4 5250
R7 1240
C3* 51
R11 9200
R13 2210
R16 2210
R18 9200
R21 9200
R24 2210
R5 715
R8 5300
R9 8250
R12 9200
R14 9200
R17 9200
R19 9200
R22 9200
R25 9200

www.jais.ru