Automotive Adaptive Front-lighting System Reference Design

Renton Ma *System Application Engineering/MCU*

ABSTRACT

The Adaptive Front-lighting System (AFS) is one part of the active safety system of a middle-high end passenger car, providing an optimized vision to the driver during night time and other poor-sight conditions of the road by adapting the headlight angle and intensity, and judging the speed of the car, the steering wheel angle, the weather condition, and yaw and tilt rate of the car.

To facilitate a user's development of such a system and to demonstrate the performance of TI's automotive MCU family, a reference design of AFS is developed.

This article describes the functions of the reference design, as well as the implementation. Furthermore, it states the guidelines for manipulating the demonstration of the reference design.

Contents

1 Functions of Adaptive Front-lighting System 3
1.1 Major Functions 3
1.2 Functions of the Reference Design 4
1.3 System Architecture 5
1.4 AFS Controller 7
1.5 AFS Slave 7
1.6 Control Panel 8
2 Implementation of the Reference Design 8
2.1 Implementation of the AFS Controller 8
2.1.1 Power Supply 8
2.1.2 Operation Modes 10
2.1.3 Light Modes 12
2.1.4 CAN Communication 15
2.1.5 Driving the Lamps With PWM (HET) 17
2.2 Implementation of the AFS Slave 18
2.2.1 Stepper Motor Control 18
2.2.2 LIN Communication 22
3 Operation of the Demo Set 23
3.1.1 Connections 23
3.1.2 Operation of the Control Panel 26
3.1.3 Starting the Demo 31
4 References 32
A.1 Schematics 33
A.1.1 AFS Controller Schematics 33
A.1.2 AFS Slave Schematics 38

List of Figures

Figure 1. Light Modes 4
Figure 2. Automotive Network Structure 5
Figure 3. System Architecture of the Reference Design 6
Figure 4. Control Board of the AFS Controller 8
Figure 5. Power Supply Circuit of the AFS Controller 9
Figure 6. TLE4275 Schematic 10
Figure 7. Operation Modes of the AFS Controller 11
Figure 8. Horizontal lighting range 13
Figure 9. Vertical Lighting Range 14
Figure 10. Driving the Lamps With PWM 17
Figure 11. Control Board of the AFS Slave 18
Figure 12. DRV8823 Driver Schematic 19
Figure 13. Current Waveform on One Bridge 20
Figure 14. AFS Demo Set 23
Figure 15. Harness 24
Figure 16. Headlight Connector 25
Figure 17. Receptacles on Control Boards 25
Figure 18. Control Panel 26
Figure 19. LCD Screen Display 31

1 Functions of Adaptive Front-lighting System

An adaptive front-lighting system is defined as in ECE324-R123 as “a lighting device, providing beams with differing characteristics for automatic adaptation to varying conditions of use of the dipped-beam (passing beam) and, if it applies, the main-beam (driving-beam) with a minimum functional content; such systems consist of the "system control", one or more "supply and operating device(s)", if any, and the "installation units" of the right and of the left side of the vehicle” (refer to ECE324, Addendum 122: Regulation No. 123).

1.1 Major Functions

Basically, an AFS provides the following functions:

- Town passing beam (Class V)
- Basic/Country passing beam (Class C)
- Motorway passing beam (Class E)
- Wet-road passing beam (Class W)
- Static cornering light
- Dynamic swivel/level lighting

Town passing beam (Class V): At speeds below 50 km/h, town light provides a wider light distribution at reduced range, helping drivers to more clearly see pedestrians on the edge of the road.

Basic/Country passing beam (Class C): The basic light illuminates the left- and right-hand edges of the road more brightly and widely than the conventional low beam. It is usually activated at speeds between 50 and 100 km/h.

Motorway passing beam (Class E): Motorway light improves vision on highways and expressways. From 100 km/h, this beam illuminates the roadway significantly further ahead and focuses more on the left-hand edge of the road. The motorway light switches on automatically at speeds greater than 100 km/h.

Wet-road passing beam (Class W): This beam is activated when the rain sensor detects precipitation or the windshield wipers are on for 2 minutes or more. The edges of the road are more strongly illuminated for better orientation to the guiding lines.

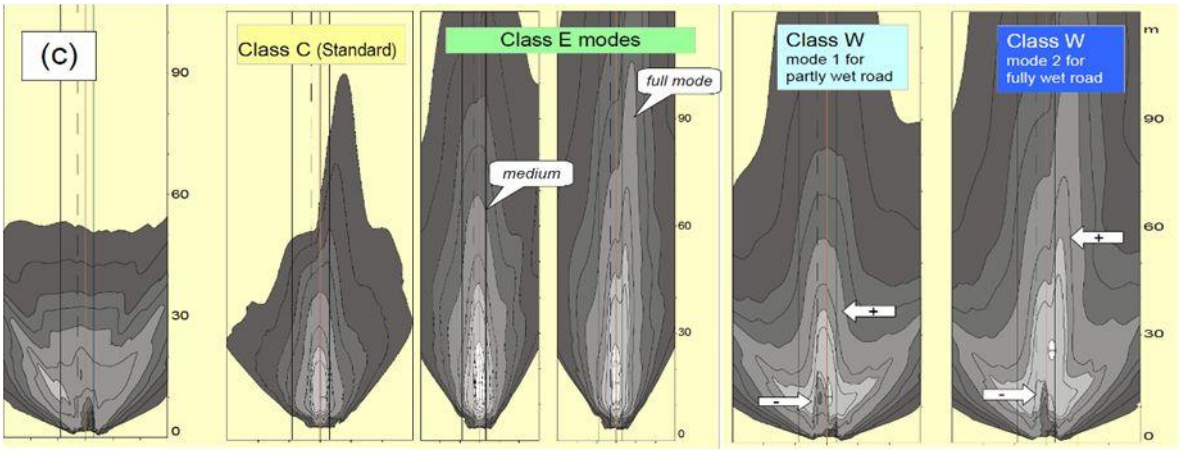

Class V Class C Class E Class W

Figure 1. Light Modes

Static cornering light: Static cornering light helps during maneuvers in dark access roads. At speeds of up to 40 km/h, one additional cornering light comes on when the indicator is actuated or the steering wheel turned through about 90 degrees to the right or left.

Dynamic swiveling and leveling:

- Leveling: The AFS adjusts the direction of the headlight (projector) vertically according to the front and rear chassis height sensors. Adjusting the pitch angle of the headlight according to static vehicle load transfer (occupant numbers, luggage) is called *static leveling*, while adjusting headlight pitch angle according to dynamic vehicle load transfer (acceleration, deceleration) is known as *dynamic leveling*.
- Swiveling: The AFS swivels the headlights horizontally by judging the input from the steering angle sensor and the speed of the car. The system provides a curve rate at up to 15 degrees; obstacles become more easily visible.

1.2 Functions of the Reference Design

The reference design of the AFS provides the light mode switching functions as mentioned previously. This is done by judging the vehicle speed sent through the CAN bus. All four classes of light modes are supported by the reference design.

By checking the light mode, vehicle speed as well as the steering wheel position, the reference design provides the static cornering light function. With the information of the steering wheel and the tilt level of the car through the CAN bus, the reference design can also perform leveling and swiveling of the passing beam.

In addition, the turning indicator, parking light, and high beam are also implemented in the reference design for a better demonstration.

This design considers the general automotive operation conditions like electrical disturbances (ISO7637), environmental conditions (ISO16750), and other existing industrial standards.

To better demonstrate the functions of the reference design, a demonstration set is also built with an automotive headlight product as the target load. To generate command signals as car speed, steering angle, and so on, a control panel is built for this demonstration set.

1.3 System Architecture

Figure 2 shows the AFS in an automotive network structure.

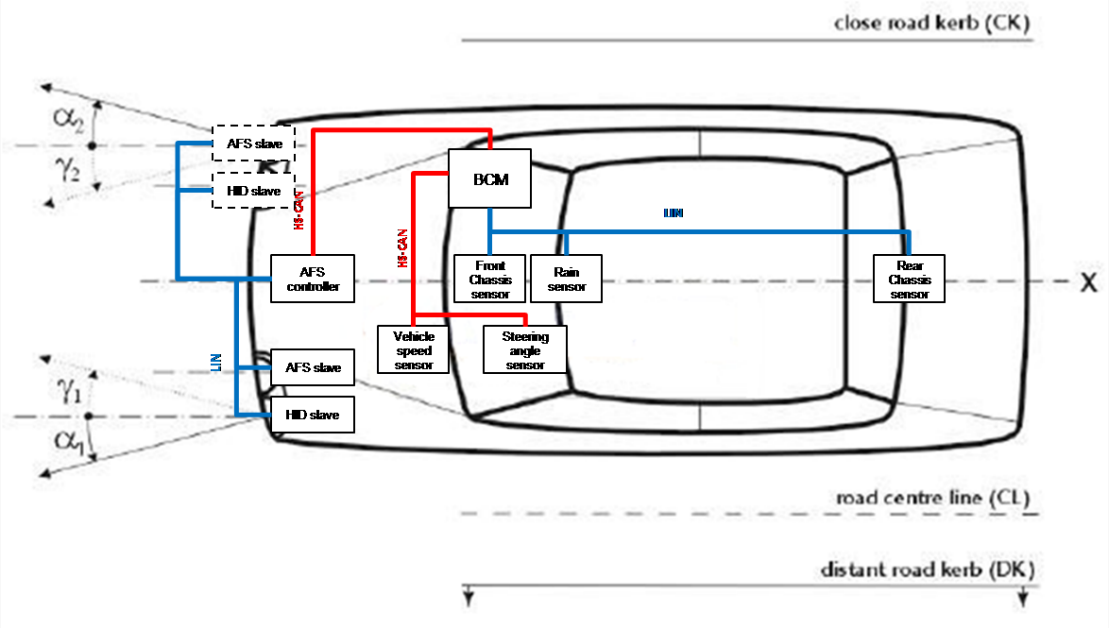

Figure 2. Automotive Network Structure

This is a concept structure of the network connection for all components in the vehicle that are concerned in the AFS.

Sensors in different positions around the vehicle are connected to BCM through the CAN or LIN bus. Front and rear chassis sensors detect the height of the vehicle and are connected through the LIN to BCM or through HS-CAN to the chassis system. In the latter case, information about the height of the vehicle is transferred to BCM through a CAN bus gateway unit.

Rain sensors are usually implemented in the wiper or washer subsystem of the body or comfort system. This subsystem is then connected to an intelligent wiper controller through the LIN, and the wiper controller sends the weather condition information back to BCM through LS-CAN as the body or comfort system; or it is connected directly with the BCM through the LIN bus as shown in Figure 2.

Vehicle speed sensor is usually located and connected in the power train system of a car through HS-CAN. The steering angle sensor is likely connected with the EPS, and the ESP subsystem belongs to the chassis system through HS-CAN. Here, their connections are simplified to a direct connection to BCM through HS-CAN.

The AFS controller receives the significant sensor information from BCM through LS-CAN of the body system or HS-CAN of the chassis system. After processing on these sensor inputs, the AFS controller sends commands through the LIN bus to the AFS slave and the HID slave to perform the operation on both left and right headlights.

Figure 3 shows the system architecture of the reference design.

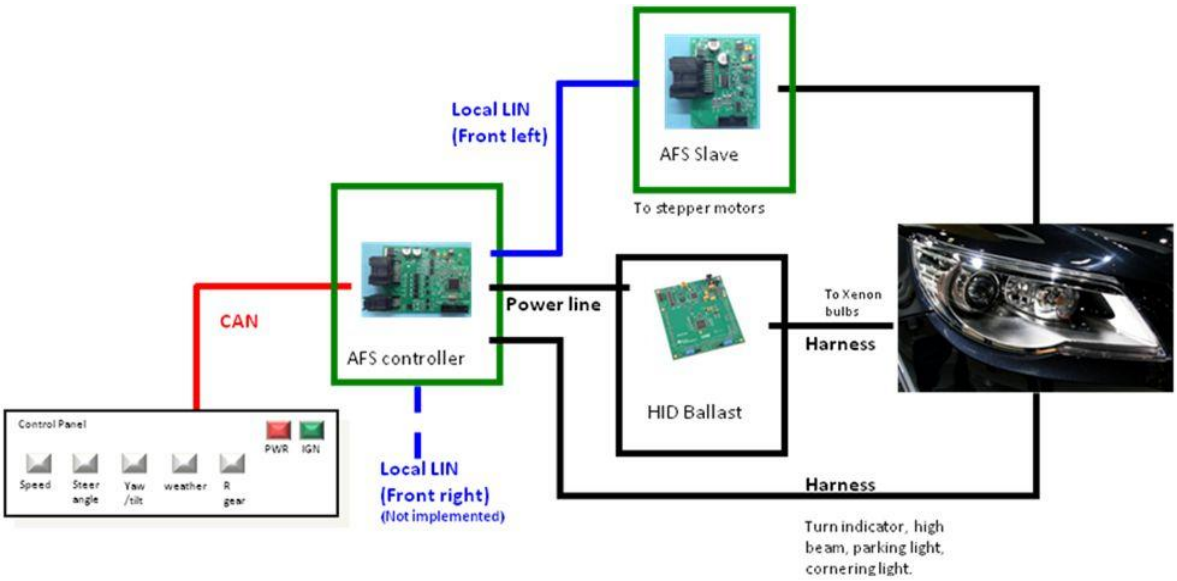

Figure 3. System Architecture of the Reference Design

The following three modules are implemented:

- Control panel (for demo)
- AFS controller
- AFS slave

The control panel provides interface to the demonstrator/user with buttons, switches, and displays. The control panel collects the commands of input and transfers them into pseudo sensor signals. These signals are sent to the AFS controller through HS-CAN.

The AFS controller acts as the central controller of the light. It receives and analyzes the sensor signals from the CAN bus, and make the judgment to determine the movement and light intensity of the headlight. The AFS controller sends commands through the LIN to the AFS slave for lamp movement and turns on and off all the lamps in the headlight.

The AFS slave controls the stepper motors equipped with the headlight projector and achieves the movement of the light according to the commands sent by the AFS controller.

1.4 AFS Controller

The AFS controller is the main control unit of the system. In the reference design, the AFS controller performs the following operations:

- Checks and sets the operation mode of the entire system
- Switches the light mode according to the vehicle speed and steering wheel position
- Communicates with the host through the CAN bus
- Sends commands to both the AFS slaves on the left and right headlights through the LIN bus to adjust the position of the lamp
- Drives the parking light, HID, high beam, cornering light, and the turn indicator for demonstration purpose

A TMS470MF03107 MCU is implemented on the AFS controller to achieve the expected performance. This MCU belongs to the TI Hercules MCU family.

The TMS470M safety microcontroller family is based on the widely adopted ARM® Cortex™-M3 CPU running at 80 MHz. This family offers several flash memory and RAM options and a wide range of connectivity and control peripherals, such as CAN, LIN and high-end timer (HET) for PWM generation. Built-in safety features like CPU and RAM self-test (BIST) engines, ECC, and parity checking enable the TMS470M device to support applications that meet the IEC61508 safety standard. The TMS470M safety microcontrollers are AEC-Q100-qualified and are the correct fit for safety and transportation applications with lower performance needs.

The TMS470MF03107 MCU has 256KB of code flash and 64KB of data flash for EEPROM emulation (320KB of flash in total), and a 100-pin QFP package.

1.5 AFS Slave

ECE324-R123 mentions that any combination of moving the lamp or light source array can be implemented to achieve an adaptive front light. In this reference design, movement of the HID projector is used to perform the passing beam adaption.

The movement of the lamp is performed by the AFS slave in the system by controlling two stepper motors equipped in the headlight. In a practical automotive system, there is one such control unit on both the right and left headlight units.

An MSP430F2272 device is implemented on the AFS slave to control the stepper motors. This device is equipped with a 16-bit high-performance CPU core with 32KB of flash, which is sufficient for controlling the motor and communication with the LIN master.

The MSP430F2272 device is also chosen because it is a very small 40-pin, QFN package UART module with LIN support and ultra-low power consumption.

1.6 Control Panel

For better demonstration, a control panel with buttons and switches as well as display is built with the reference design. The functions of the control panel are explained in the operation guide section.

2 Implementation of the Reference Design

2.1 Implementation of the AFS Controller

Figure 4 shows the control board of the AFS controller.

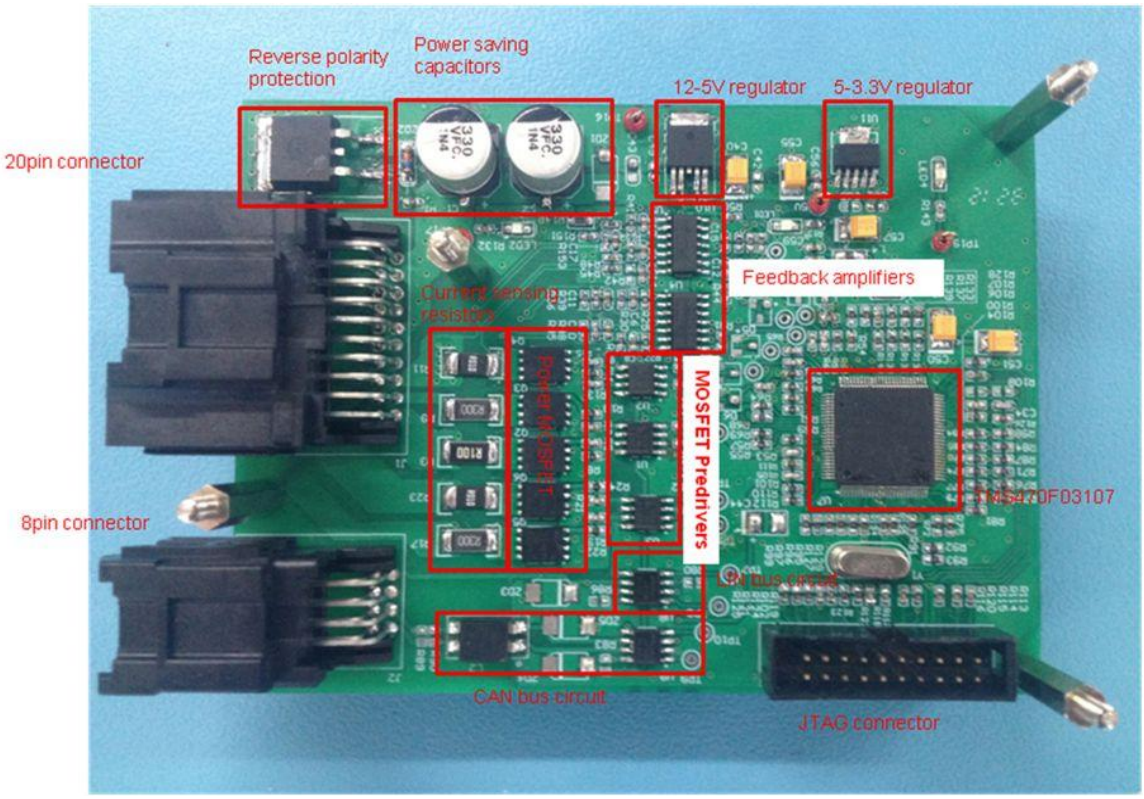

Figure 4. Control Board of the AFS Controller

The following sections explain the major design and implementation considerations of the AFS controller.

2.1.1 Power Supply

There are several requirements for power supply circuit in the automotive applications requested by ISO7637-2 and ISO16750-2. The most important requirements are reverse battery polarity protection, momentary supply drop, and load dump voltage protection.

For reverse battery polarity protection, a power MOSFET is implemented in our reference solution to provide lower power loss than a serial diode during normal operation mode and better endurance during reverse battery mode, as shown in Figure 5.

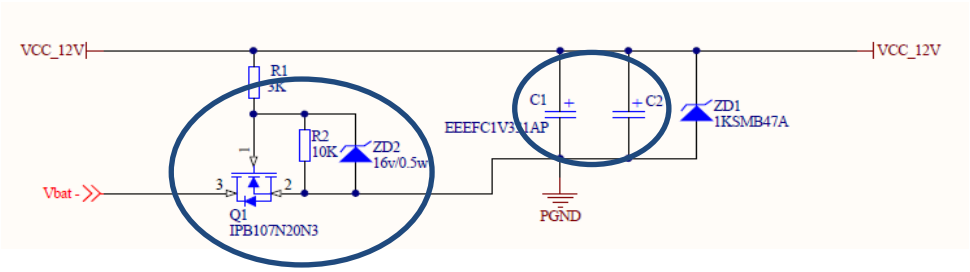

Figure 5. Power Supply Circuit of the AFS Controller

Because the AFS controller in this reference design must drive several lamps as its load with roughly a 30-A maximum current, a power MOSFET with a relatively larger current driving capability is chosen here. To reduce cost, an N-channel power MOSFET is chosen and implemented into the circuit on the ground line for easier circuit design.

As for the momentary power supply drop, two pieces of 330-µF capacitors are added to the power circuit to improve the power-saving capability.

Load dump voltage is a common concern in automotive applications. Load dump voltage occurs if a discharged battery is disconnected when the alternator is generating charging current and other loads remain on the alternator circuit.

Usually, car makers implement suppressors in the alternator side so that the load dump is suppressed to 45 V, as mentioned by ISO7637-2.

To survive the load dump voltage, a TLE4275 12- to 5-V LDO is used in this reference solution.

TI's TLE4275 LDO provides the capability to sustain a load dump voltage of up to 45 V in an automotive application, thus making the design of the power supply circuit much easier.

Figure 6 shows the connection of the TLE4275 LDO in the schematic of the reference solution.

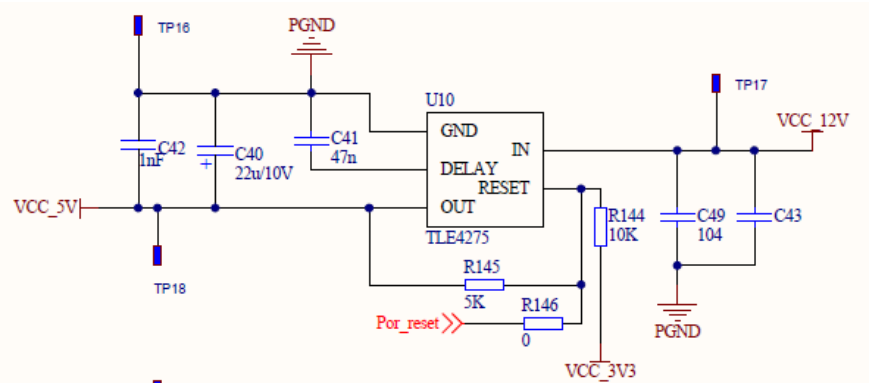

Figure 6. TLE4275 Schematic

CAUTION:

When RESET output of the TLE4275 LDO is to be used by TMS470MF03107, populate R144 and R146 and unpopulate R145. When RESET is not used by the MCU, populate R145 and unpopulate R144 and R146. Do not populate R144/R146 and R145 at same time.

2.1.2 Operation Modes

The AFS controller works in different operation modes, depending on the command through the CAN bus and the error status.

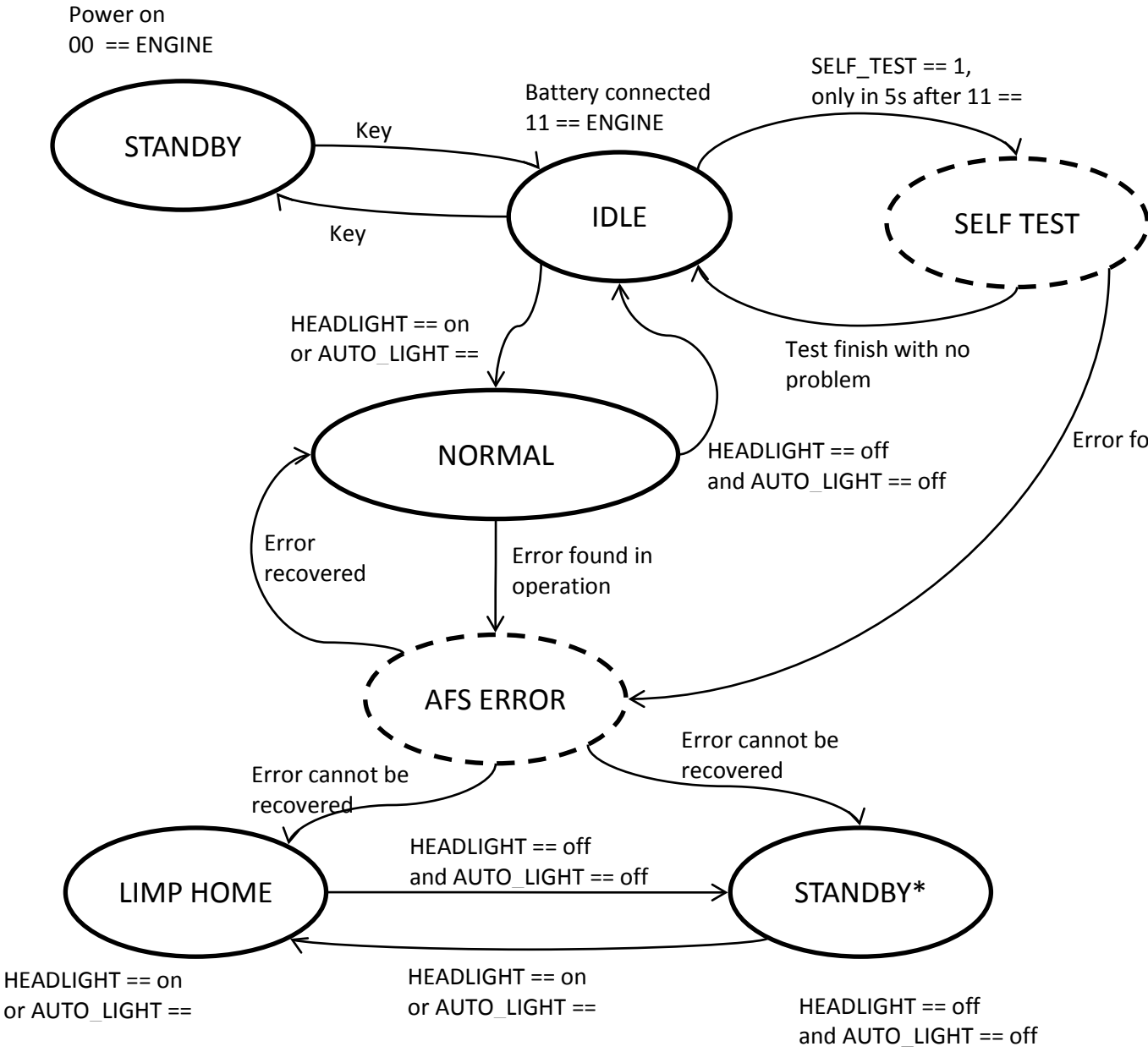

Figure 7. Operation Modes of the AFS Controller

The AFS controller stays in STANDBY mode when powered up and waits for the **key on** command from the CAN bus. This is the command that user can take as the Ignition or KL15/KL30 signal of an automotive system. In this reference design, **key on** signal is sent by the control panel with the CAN signal named ENGINE.

In STANDBY mode, only CAN communication is monitored. None of the lighting operation is functional. The user can set the controller to lower power mode, which is not implemented for demonstration.

When the **key on** command is received, the AFS controller enters IDLE mode. In this mode, the AFS controller turns on the parking light to indicate its operation mode and waits for headlight operation commands. The AFS controller responds to the turning command and the hazard command in IDLE mode and flashes the indicator.

Either the HEADLIGHT on (low beam or high beam) command or the AUTO_LIGHT on command can trigger the mode switch from IDLE to NORMAL operation mode.

In NORMAL operation mode, the parking light is turned off. Low beam is on according to the status of the HEADLIGHT command. If the AUTO_LIGHT command is off, then low beam is always on in NORMAL operation mode. The high beam can be triggered by the high beam command.

In this operation mode, the AFS controller checks the information on the CAN bus and determines the light mode. It sends commands to the slave through the LIN bus to perform proper movement of the lamp.

If the headlight is switched off, both HEAD_LIGHT and AUTO_LIGHT are off, AFS controller goes back to IDLE mode.

The AFS controller can be set to SELF TEST mode when the system first time enters IDLE, and the SELF TEST command is received within 5 seconds after IDLE mode is entered.

In SELF TEST mode, the AFS controller orders the lamps to turn on and off in sequence and moves the lamp to check whether there is a problem of the headlight components.

This procedure lasts for approximately 5 seconds, and the AFS controller returns to IDLE mode.

> **NOTE:** SELF TEST mode can be entered only once in the normal operation procedure. SELF TEST mode can be entered multiple times only when AUTO DEMO is activated for demonstration purpose.

AFS ERROR mode is entered whenever an error is detected in the system. The AFS controller tries to recover the error and return to the previous operation mode. If the error cannot be recovered, the AFS controller enters either LIMP HOME mode or STANDBY mode.

LIMP HOME mode provides the fundamental lighting function without any movement of the lamp. The AFS controller tries to restore the position of the projector and always turn it on. This occurs mainly when force limp home signal is received or CAN communication is lost for a certain period of time (typically, 5 seconds).

2.1.3 Light Modes

Lighting mode is decided by the AFS controller according to vehicle speed and weather conditions.

Town passing beam (Class V):

At speeds of less than 50 km/h, town light provides a wider light distribution at reduced range, thus helping drivers more clearly see pedestrians on the edge of the road. The headlight is swiveled left and right to provide larger sight range. The headlight is swiveled for an 8-degree angle toward each side.

No dynamic swiveling is to be performed in this lighting mode.

Leveling is performed in this lighting mode.

Basic/Country passing beam (Class C):

The basic light illuminates the left- and right-hand edges of the road more brightly and widely than does the conventional low beam. The basic light is activated at speeds between 50 and 100 km/h. To activate the light mode, vehicle speed must be kept in this range for at least 5 seconds. (The user can set the time according to application; for demonstration purposes, this value is set to 5 seconds.)

The headlight keeps a straight position of the neutral position axis ($\Delta\varphi = 0°$) and swivels according to the steering angle of the vehicle within the range of αmax and γmax (see Figure 8).

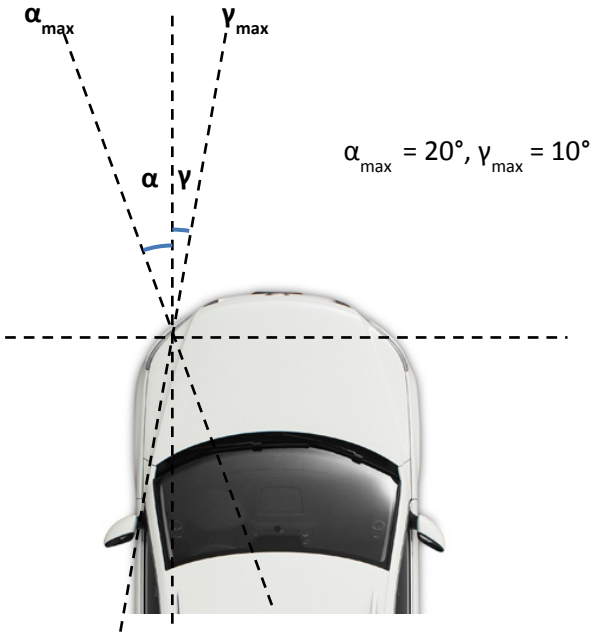

Figure 8. Horizontal lighting range

Leveling is performed in this lighting mode.

Motorway passing beam (Class E):

Motorway light improves vision on highways and expressways: from a speed of 100 km/h, motorway light illuminates the roadway significantly further ahead and focuses more on the left-hand edge of the road. Vehicle speed must be kept in this range for at least 5 seconds to activate the light mode. (The user can set the time according to application; for demonstration purposes, this value is set to 5 seconds.)

The headlight keeps a straight position of the neutral position axis ($\Delta\varphi = 0°$) and swivels according to the steering angle of the vehicle within the range of α_{max} and γ_{max}.

Leveling is performed in this lighting mode.

Wet-road passing beam (Class W):

This beam is activated when the rain sensor detects precipitation or the windshield wipers are on for 2 seconds or more in basic passing beam (Class C) mode and motorway passing beam (Class E) lighting mode. The edges of the road are more strongly illuminated for better orientation to the guiding lines. The light cone is somewhat shorter on the left-hand side, moderating light reflection on the wet, reflective road surface.

The neutral position axis of the headlight is swiveled for an angle of $\Delta\varphi$ (5 degrees) toward each side, as shown in Figure 9. Horizontal swivel range is also changed based on the axis shift by $\Delta\varphi$ (5 degrees).

Leveling is performed in this lighting mode.

An additional 2 degrees downward of the headlight is applied in this mode.

Figure 9. Vertical Lighting Range

2.1.4 CAN Communication

The AFS controller communicates with the control panel through a 250-Kbps CAN bus compliant with ISO11898.

The following commands are sent by the control panel:

ID_Name	ID	Byte_No.	Byte_Function	Bit	Function	Control Panel	AFS Controller	Cycle Time in ms	Cycle Time when standby in ms	Description	Remark
Hlight_CMD	531h	0	Sys_Ctrl_0	0...1	ENGINE	T	R	10	1000	Ignition status: 00 = engine off, 11 = engine on, 01 = 10 = Reserved	In case ACC mode is to be added, more status would be needed.
Hlight_CMD	531h	0	Sys_Ctrl_0	2	LOW_VOLT	T	R	10	1000	Low power: 0 = off, 1 = on	
Hlight_CMD	531h	0	Sys_Ctrl_0	3...7	OP_VOLT	T	R	10	1000	AFS subsystem operation voltage value: from 0 to 26 volt. (For demo, only from 0 to 9V)	
Hlight_CMD	531h	1	Sys_Ctrl_1	0	AUTO_DEMO	T	R	10	1000	Auto demo status: 0 = off (manual), 1 = on (auto)	
Hlight_CMD	531h	1	Sys_Ctrl_1	1	DEMO_RST	T	R	10	1000	Demo is reseting itself: 0 = no, 1 = yes	
Hlight_CMD	531h	1	Sys_Ctrl_1	2	HEADLIGHT	T	R	10	1000	Headlight is switched on **manually**: 0 = no, 1 = yes	
Hlight_CMD	531h	1	Sys_Ctrl_1	3	AUTO_LIGHT	T	R	10	1000	Auto headlight is switched on: 0 = no, 1 = yes	AUTO_LIGHT has higher priority than HEADLIGHT
Hlight_CMD	531h	1	Sys_Ctrl_1	4	HIGH_BEAM	T	R	10	1000	High beam is switched on: 0 = no, 1 = yes	
Hlight_CMD	531h	1	Sys_Ctrl_1	5	WEATHER	T	R	10	1000	Rain condition: 0 = dry, 1 = rainy/wet	
Hlight_CMD	531h	1	Sys_Ctrl_1	6	SELF_TEST	T	R	10	1000	Self test is switched on: 0 = no, 1 = yes	Only valid in 4s window after power (engine) on.
Hlight_CMD	531h	1	Sys_Ctrl_1	7	HAZARD	T	R	10	1000	Hazard signal is switched on: 0 = no, 1 = yes	
Hlight_CMD	531h	2	Sys_Ctrl_2	0	LIMP_HOME	T	R	10	1000	Limp home is switched on: 0 = no, 1 = yes	The function of this bit is actually performed by cutting off the communication.
Hlight_CMD	531h	2	Sys_Ctrl_2	1...2	TURN	T	R	10	1000	Turn indicator position: 00 = off/middle, 01 = turn left, 10 = turn right, 11 = Reserved.	
Hlight_CMD	531h	2	Sys_Ctrl_2	3...7	RESERVED	T	R	10	1000	Reserved bits, default = 00000;	All reserved bit are set dominant to keep the bus.
Hlight_CMD	531h	3	Steering_0	0...1	STR_DIR	T	R	10	1000	Steering wheel direction: 00 = neutral/middle 01 = left, 10 = right, 11 = reserved	
Hlight_CMD	531h	3	Steering_0	2...5	RESERVED	T	R	10	1000	Reserved bits, default = 0000;	All reserved bit are set dominant to keep the bus.
Hlight_CMD	531h	3	Steering_0	6...7	STR_AGL_H	T	R	10	1000	Highest 2 bits of steering angle	Total 10 bits for steering angle, a value of 0~720 degrees is to be put here.
Hlight_CMD	531h	4	Steering_1	0...7	STR_AGL_L	T	R	10	1000	Low 8 bits of steering angle	
Hlight_CMD	531h	5	Speed	0...7	SPEED	T	R	10	1000	8 bit speed information in KM/H.	A value of 0~200KM/H is to be put here.
Hlight_CMD	531h	6	Tilt	0...1	TILT_STAT	T	R	10	1000	Tilt status: 00 = Neutral, 01 = Front lower, 10 = Back lower, 11 = Reserved	
Hlight_CMD	531h	6	Tilt	2...7	TILT_AGL	T	R	10	1000	Tilt angle: from 0~45 degree.	Maxium 45 degree tilt to be demonstrated.
Hlight_CMD	531h	7	Ambient light	0...7	LIGHT_LVL	T	R	10	1000	Ambient light level in percentage: 1~100%	Reserved function, real action may not be implemented.

Feedback from the AFS controller to the control panel:

ID_Name	ID	Byte_No.	Byte_Function	Bit	Function	Control Panel	AFS Controller	Cycle Time in ms	Cycle Time when standby in ms	Description	Remark
AFS_FDBK	551h	0	AFS_status_0	0..3	AFS_STAT	R	T	30	1000	Operating status of the AFS system: 0000 = Normal 0001 = Limp home (lost CAN communication) 0010 = Low voltage (Lower than 9V) 0011 = AFS system error 0100 = Standby 0101 = Self test in progress Others = reserved	16 status options reserved in this field.
AFS_FDBK	551h	0	AFS_status_0	4..6	LIGHT_MOD	R	T	30	1000	Current lighting mode of the AFS system: 00 = Basic/Country passing beam (Class C) 01 = Town passing beam (Class V) 10 = Motorway passing beam (Class E) 11 = Wet-road pass beam (Class W)	No valid unless LOW_BEAM == 1.
AFS_FDBK	551h	0	AFS_status_0	7	LOW_BEAM	R	T	30	1000	Low beam is turned on: 0 = no, 1 = yes	
AFS_FDBK	551h	1	AFS_status_1	0	HIGH_BEAM	R	T	30	1000	High beam is turned on: 0 = no, 1 = yes	
AFS_FDBK	551h	1	AFS_status_1	1..3	RESERVED	R	T	30	1000	Reserved bits, default = 000;	All reserved bit are set dominant to keep the bus.
AFS_FDBK	551h	1	AFS_status_1	4..7	L_POS_V	R	T	30	1000	Vertical position of the light.	4bit position value between -5 to +5 degree. (Max -8 to +8 degree)
AFS_FDBK	551h	2	AFS_status_2	0..5	L_POS_H	R	T	30	1000	Horizontal position of the light	6bit position value between -8 to +16 degree. (Max -32 to +32 degree)
AFS_FDBK	551h	2	AFS_status_2	6..7	RESERVED	R	T	30	1000	Reserved bits, default = 00;	All reserved bit are set dominant to keep the bus.
AFS_FDBK	551h	3	AFS_ERR_0	0..3	CTRL_ERR	R	T	30	1000	Error code of the AFS controller: 0000 = No error 0001 = CAN communication error 0010 = LIN communication error 0011 = Error command received from control panel 0100 = Over voltage protection 0101 = Low voltage protection others reserved.	To be added during design
AFS_FDBK	551h	3	AFS_ERR_0	4..7	SLAVE_ERR	R	T	30	1000	Error code of the AFS slave: 0000 = No error 0001 = LIN communication error 0010 = Stepper motor error (step loss overflow) 0011 = Stepper motor error (stall detection failed) others reserved	To be added during design
AFS_FDBK	551h	4	AFS_ERR_1	0..3	HID_ERR	R	T	30	1000	Reserved, default = 0000;	Reserved for future updates.
AFS_FDBK	551h	4	AFS_ERR_1	4..7	RESERVED	R	T	30	1000	Reserved bits, default = 0000;	All reserved bit are set dominant to keep the bus.

2.1.5 Driving the Lamps With PWM (HET)

Because light control in a car is usually isolated from the cabin and the operation voltage is 12 V (typical), low-side switches are normally used for light control.

The lamps are driven by N-ch power MOSFET CSD16325Q5 from TI with 33-A driving capability because the transient current of the lamp is usually around 10 A and some could exceed 15 A. CSD16325Q5 provides a very wide operation range for such applications.

To control the MOSFET, a predriver device TPS2811 is used. This two-channel. high-speed MOSFET driver with an internal regulator makes the circuit board more compact and cost-competitive.

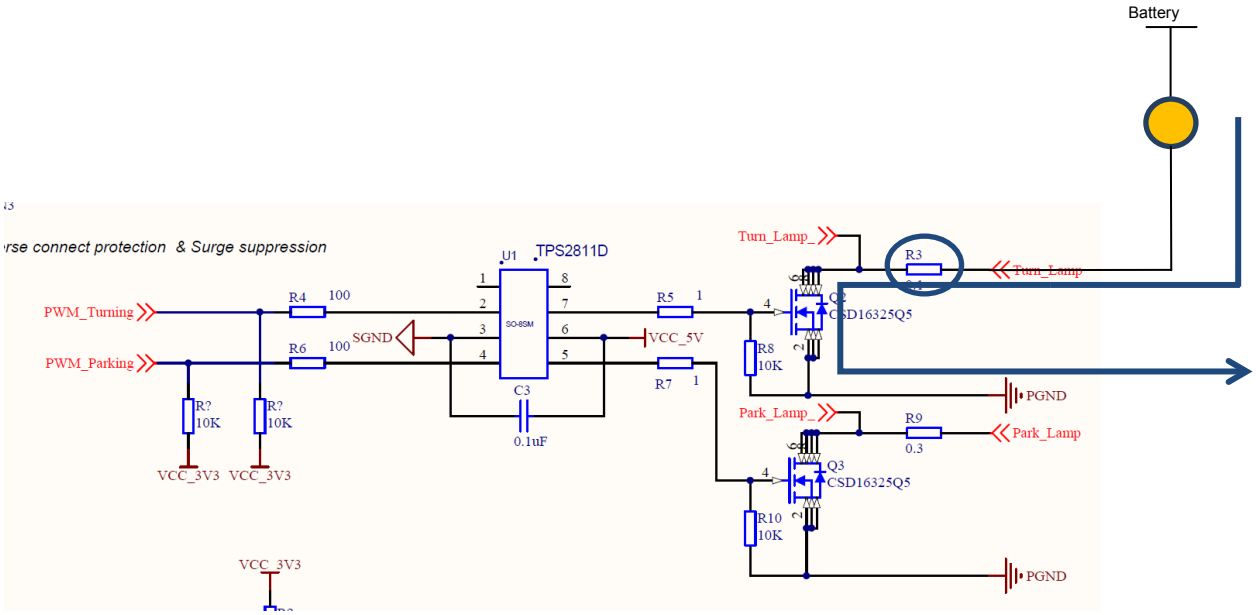

Figure 10. Driving the Lamps With PWM

To control the lamp, a 1-kHz PWM signal generated by the TMS470MF03107 is used here. The device is equipped with a powerful timer unit called the high-end timer (HET), which can output up to 44 channels of PWM signals (5 channels are used here).

The PWM output function of the device can be configured with a code generator with a graphic user interface called the HALCoGen. (http://www.ti.com/tool/halcogen)

To limit the power consumption of the lamp for demonstration purpose, a maximum 60% duty cycle is selected for this reference design.

All the lamps are turned on and off with soft starting and stopping by PWM duty.

The operation current of the lamps are monitored by sampling the voltage over the shunt resistor. When a short or disconnection occurs, the AFS controller can detect the problem and operate accordingly.

2.2 Implementation of the AFS Slave

Figure 11 shows the control board of the AFS slave.

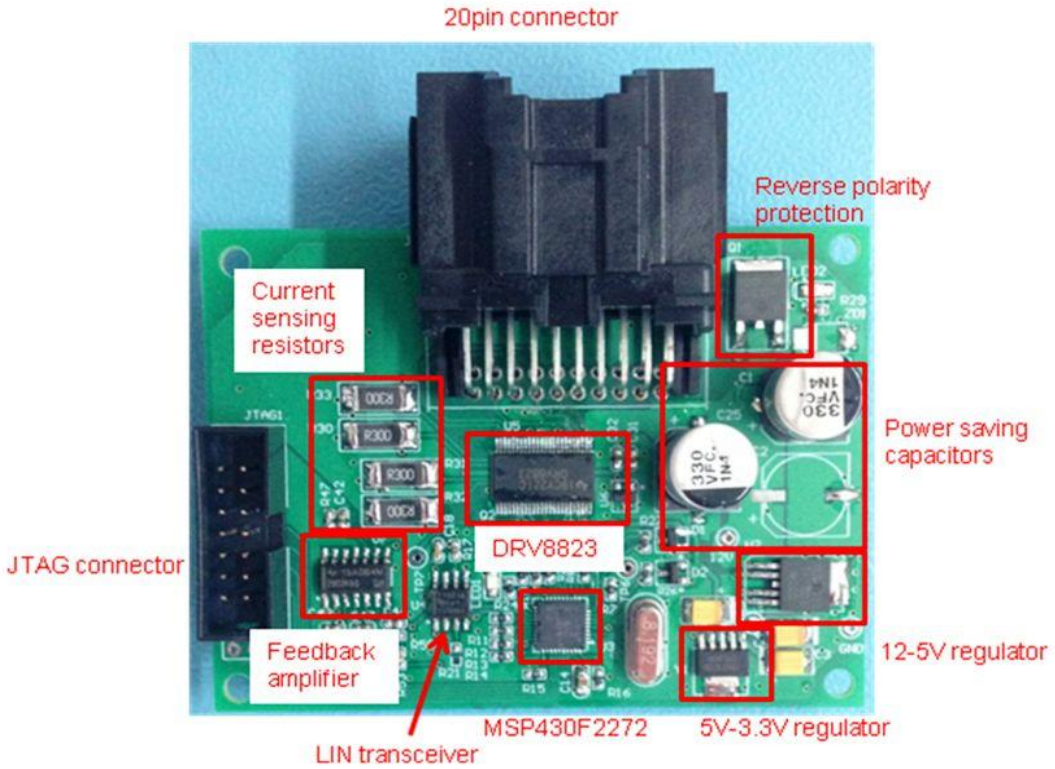

Figure 11. Control Board of the AFS Slave

The following sections explain the major design and implementation considerations of the AFS slave.

2.2.1 Stepper Motor Control

In most of the AFSs, stepper motors are used to move the position of the projector. In this reference design, two stepper motors are used: one for vertical movement and the other for horizontal movement.

The stepper motor for vertical movement is a 24-step linear stepper motor with12-V operation voltage and 1-A driving current. The stepper motor for horizontal movement is a 24-step permanent magnetic motor, also with 12-V operation voltage and 1-A driving current.

To drive these motors, a 4-bridge serial interface motor driver from TI, DRV8823, is used.

The DRV8823 driver provides the capability to drive two bipolar stepper motors at the same time with up to 1.5-A current on each winding, eight current levels for microstepping, selectable slow or mixed decay mode, and has internal reference for 3.3 V.

The previously mentioned features of the DRV8823 driver make it the correct device for this reference design.

Figure 12 shows the connection of the DRV8823 in the AFS slave system.

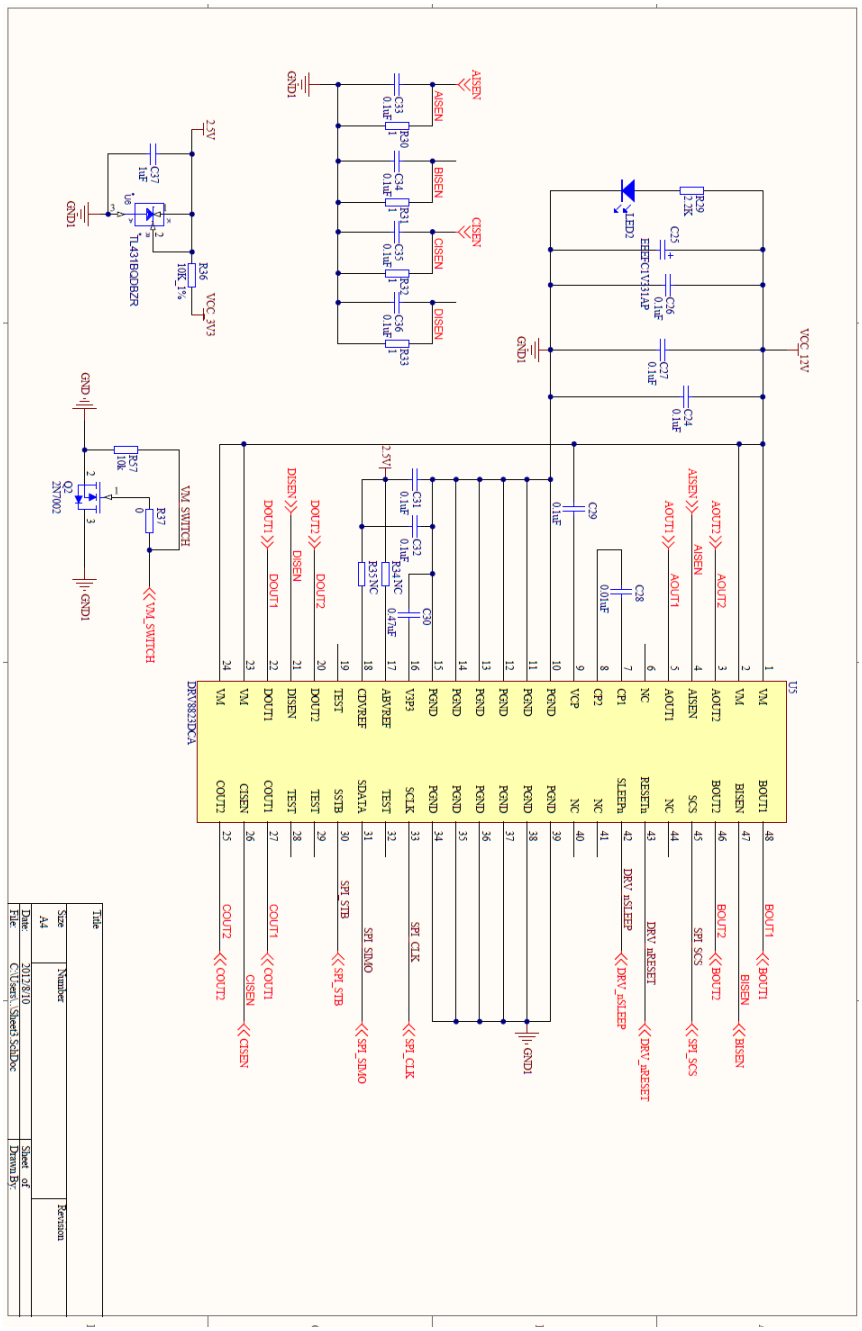

Figure 12. DRV8823 Driver Schematic

With the DRV8823 driver, the user can easily perform 8-step microstepping to control both stepper motors.

Because the DRV8823 driver operates based on the commands it receives from the SPI interface, the MCU must update the chopping current ratio to achieve the stepping.

Table 1 lists the available chopping current ratio provided by the DRV8823 driver.

Table 1. Chopping Current and Command Bit Set

xI2	xI1	xI0	Relative Current (% full-scale chopping current)
0	0	0	20
0	0	1	38
0	1	0	56
0	1	1	71
1	0	0	83
1	0	1	92
1	1	0	98
1	1	1	100

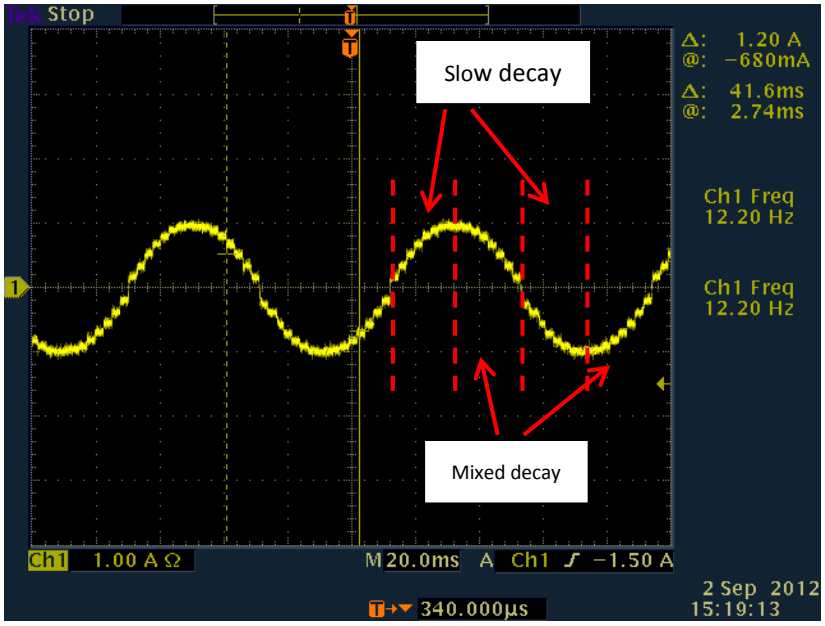

Figure 13. Current Waveform on One Bridge

Because PM motors have self-inductance, proper decay of the current must be applied to the driving method. In an AFS slave application, slow decay is performed in charging phases, and mixed decay is performed for the discharge phases to make the rotation smooth. See Figure 13.

The serial command to be sent to the DRV8823 driver is organized in the following code:

```
const unsigned int SerialBuffer[4] =
{
    /* PA = 0, PB = 0   */
    0x0000  |(0x0 << 12U)    /* ADDR     :4  */
            |(0x0 << 11U)    /* BDecay   :1  */
            |(0x7 << 8U)     /* BChop    :3  */
            |(0x0 << 7U)     /* BPhase   :1  */
            |(0x1 << 6U)     /* BEnable  :1  */
            |(0x0 << 5U)     /* ADecay   :1  */
            |(0x7 << 2U)     /* AChop    :3  */
            |(0x0 << 1U)     /* APhase   :1  */
            |(0x1 << 0U),    /* AEnable  :1  */

    /* PA = 0, PB = 1   */
    0x0000  |(0x0 << 12U)    /* ADDR     :4  */
            |(0x0 << 11U)    /* BDecay   :1  */
            |(0x7 << 8U)     /* BChop    :3  */
            |(0x1 << 7U)     /* BPhase   :1  */
            |(0x1 << 6U)     /* BEnable  :1  */
            |(0x0 << 5U)     /* ADecay   :1  */
            |(0x7 << 2U)     /* AChop    :3  */
            |(0x0 << 1U)     /* APhase   :1  */
            |(0x1 << 0U),    /* AEnable  :1  */

    /* PA = 1, PB = 1   */
    0x0000  |(0x0 << 12U)    /* ADDR     :4  */
            |(0x0 << 11U)    /* BDecay   :1  */
            |(0x7 << 8U)     /* BChop    :3  */
            |(0x1 << 7U)     /* BPhase   :1  */
            |(0x1 << 6U)     /* BEnable  :1  */
            |(0x0 << 5U)     /* ADecay   :1  */
            |(0x7 << 2U)     /* AChop    :3  */
            |(0x1 << 1U)     /* APhase   :1  */
            |(0x1 << 0U),    /* AEnable  :1  */

    /* PA = 1, PB = 0   */
    0x0000  |(0x0 << 12U)    /* ADDR     :4  */
            |(0x0 << 11U)    /* BDecay   :1  */
            |(0x7 << 8U)     /* BChop    :3  */
            |(0x0 << 7U)     /* BPhase   :1  */
            |(0x1 << 6U)     /* BEnable  :1  */
            |(0x0 << 5U)     /* ADecay   :1  */
            |(0x7 << 2U)     /* AChop    :3  */
            |(0x1 << 1U)     /* APhase   :1  */
            |(0x1 << 0U)     /* AEnable  :1  */
};
```

2.2.2 LIN Communication

The AFS slave communicates with the AFS controller through a LIN bus as a slave node with a 20-Kbps baud rate following the LIN2.0 protocol specification.

The LIN communication commands are as follows:

ID (hex without Parity)	ID (dec without Parity)	ID-Field (hex with Parity) ID7 .. ID0	length of message (Byte)	frame-name	Byte-Nr.	Bit	Function	Remark
0x30	48	0xF0	4	AFS_Master_CMD	0	0…6	Stepper motor (Horizontal) Target position	in Hsteps
		0B11110000				7	Set Hstep 0	When this bit == 1, Master is requesting the slave to take the current position as the Hstep=0. (for calibration and self-test)
					1	0…6	Stepper motor (Vertical) Target position	in Vsteps
						7	Set Vstep 0	When this bit == 1, Master is requesting the slave to take the current position as the Vstep=0. (for calibration and self-test)
					2	0	Go-to-Standby	Standby command, 1 == go to standby mode after update the current status. 0 == stay in normal operation mode.
						1	Clear Error	Clear Error command from master, AFS slave shall ignore current error and reset itself. 1 == clear error, 0 == do not care.
						2	Clear step loss count	1 == clears the step loss count to 0. 0 == do not care.
						3…7	Reserved	
					3	0…7	Reserved	
0x31	49	0xB1	5	AFS_Slave_RES	0	0…6	Stepper motor (Horizontal) current position	in Hsteps
		0B10110001				7	Reserved	
					1	0…6	Stepper motor (Vertical) current position	in Vsteps
						7	Reserved	
					2	0…1	Operation mode	00 == Normal operation mode 01 == (Entering)Standby mode 10 == Error mode 11 == Reserved
						2…3	Reserved	
						4…7	Step loss count	Counts the step loss times in overall operation time.
					3	0…2	Error code	000 == No error 001 == Step loss overflow (≥5) 010 == Stall detection error (motor stalled) 011 == IC protected (OCP, TSD, UVLO) 100 == LIN communication error 101 == over voltage error 110 == low voltage error
						3…7	Reserved	
0x3C	60	0x3C	8	DiagReq	0…7		Reserved	
0x3D	61	0x7D	8	DiagResp	0…7		Reserved	

3 Operation of the Demo Set

Figure 14 shows the demo set of the AFS reference design.

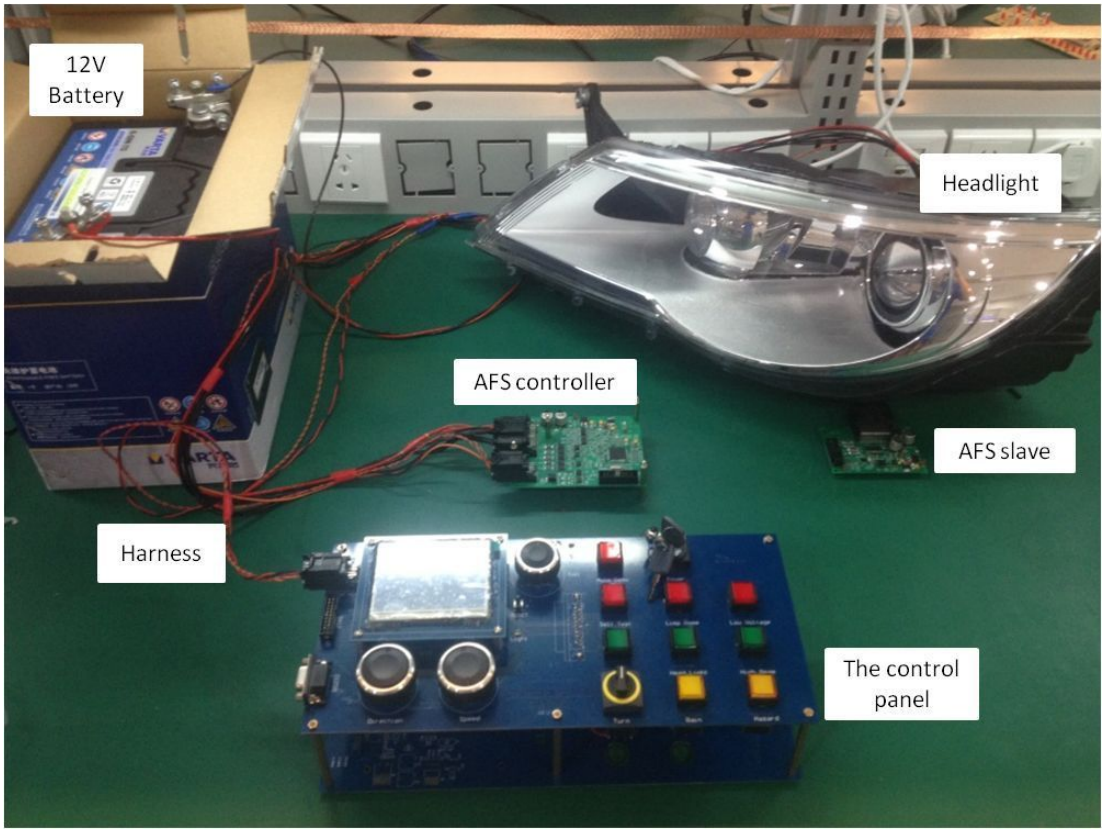

Figure 14. AFS Demo Set

3.1.1 Connections

To set up the demonstration system, each component of the system must be connected properly with the harness. Figure 15 shows the terminals of the harness.

1. 8-pin terminal; communication connector for the AFS controller
2. 20-pin terminal; power and control signal of the AFS controller
3. 8-pin terminal; communication and power of the control panel
4. 14-pin terminal; communication, power, and control signals of the headlight unit
5. Power clipper to 12-V battery positive
6. Ground clipper to 12-V battery negative
7. 20-pin terminal; connection between headlight unit and the AFS slave

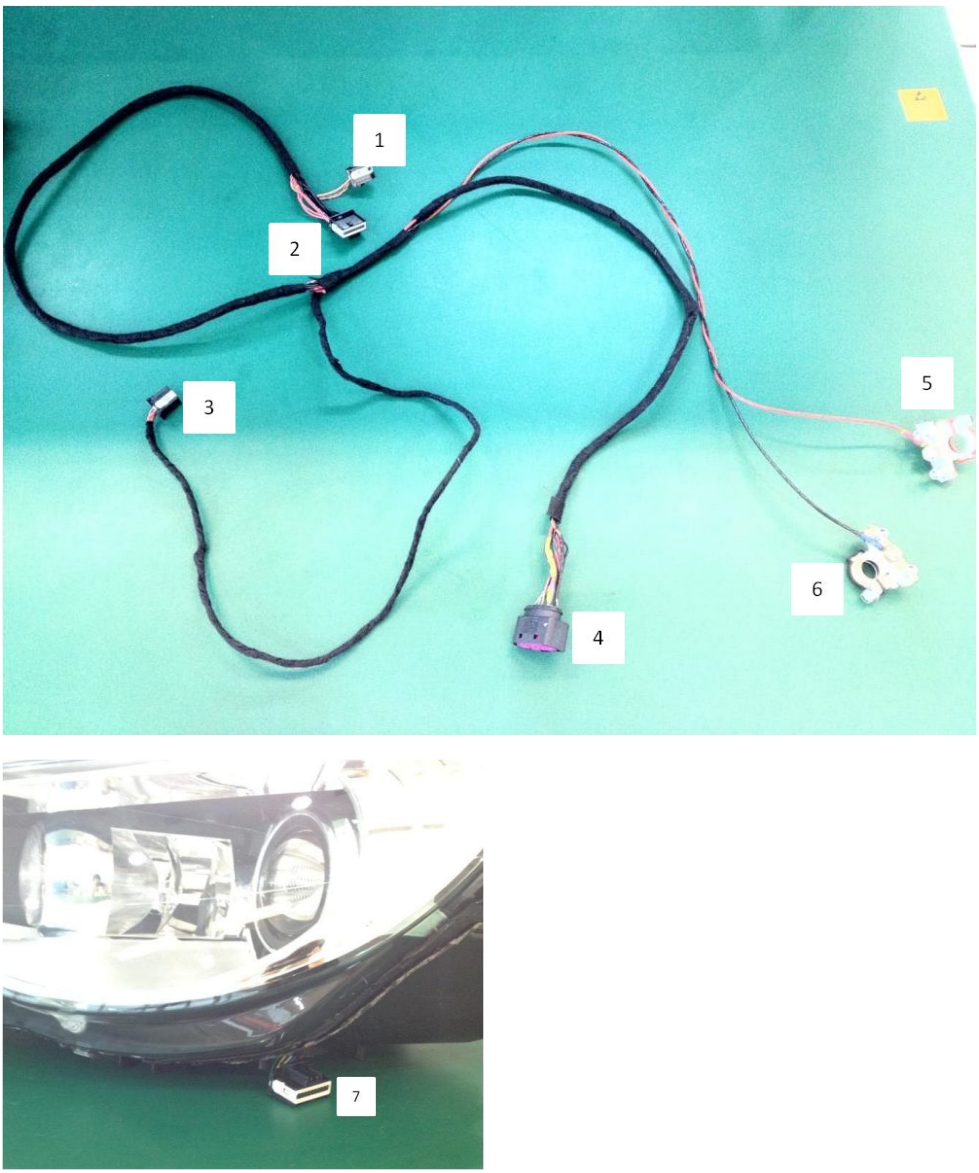

Figure 15. Harness

Perform the following the steps to set up the system:

1. Connect terminal 4 to the headlight unit. The receptacle of terminal 4 is at the back side of the light near the bottom. This is an antireverse connector. The user can plug the terminal into the receptacle until a click is heard.

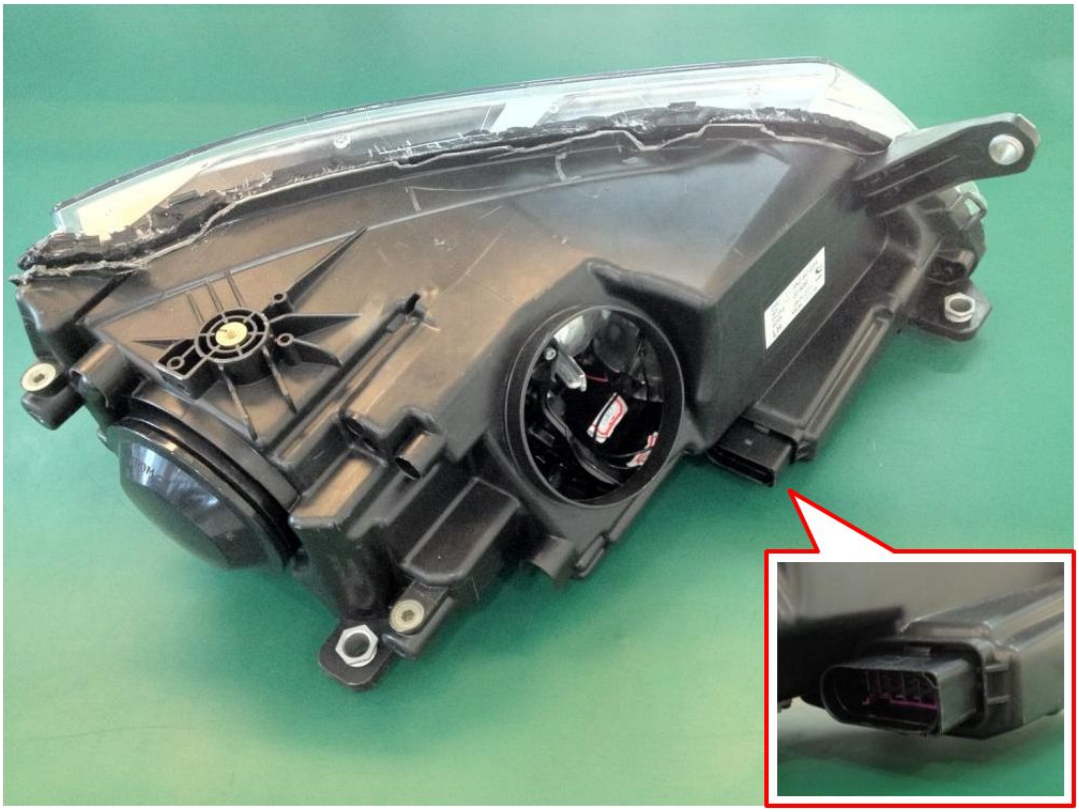

Figure 16. Headlight Connector

2. Place terminals 1 and 2 to the receptacles on the AFS controller, terminal 3 to the receptacle on the control panel, and terminal 7 to the receptacle on the AFS slave. These connectors are also designed with an antireverse feature. The user can plug these connectors into the receptacles until a click is heard.

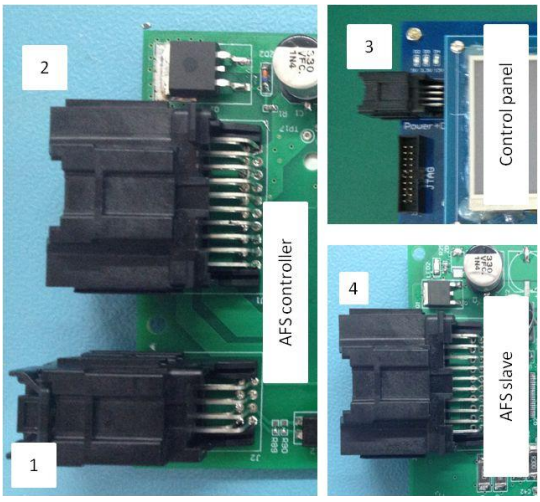

Figure 17. Receptacles on Control Boards

3. Connect terminal 5 to the positive pole of a 12-V battery, and connect terminal 6 to the negative pole.

CAUTION:

When DC voltage source is to be used instead of a battery, make sure the DC source is capable of more than 200-W power output.

3.1.2 Operation of the Control Panel

The control panel is the human machine interface for the demonstration set. Figure 18 shows the control panel.

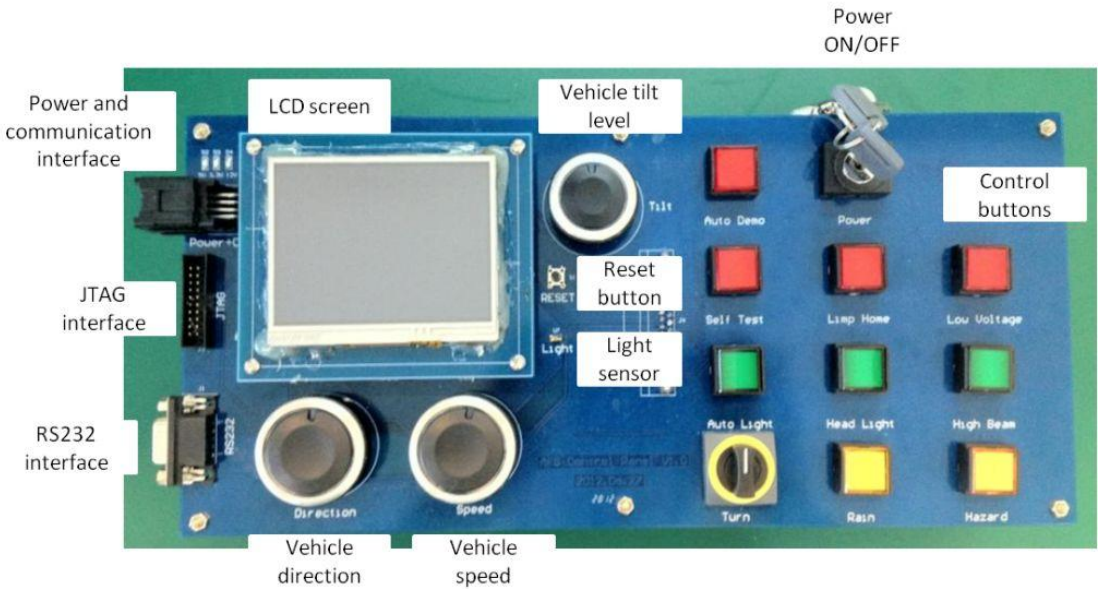

Figure 18. Control Panel

The control panel is powered by the 12-V battery through the 8-pin connector. Once the control panel is powered, the user can turn it on or off with the Power key switch.

When the control panel is switched on, the LCD screen is lighted with the TI logo. All buttons with an LED flash once.

There are nine LED buttons, one 3-direction switch, three tuners, and one light sensor on the control board as inputs to the system. All inputs are effective only when the Power key switch is switched on.

There is an SMT-type (RESET) switch on the board; this switch is a reset signal to the MCU on the control panel.

The nine LED buttons are as follows:

Auto Demo: This is a toggle-type button. When it is activated, LED backlight on the button is turned on. The system enters automatic demo mode. The system ignores all other inputs of the LED buttons, tuners, light sensor, and switch.

Automatic demo is performed with the sequence represented in the following flow chart:

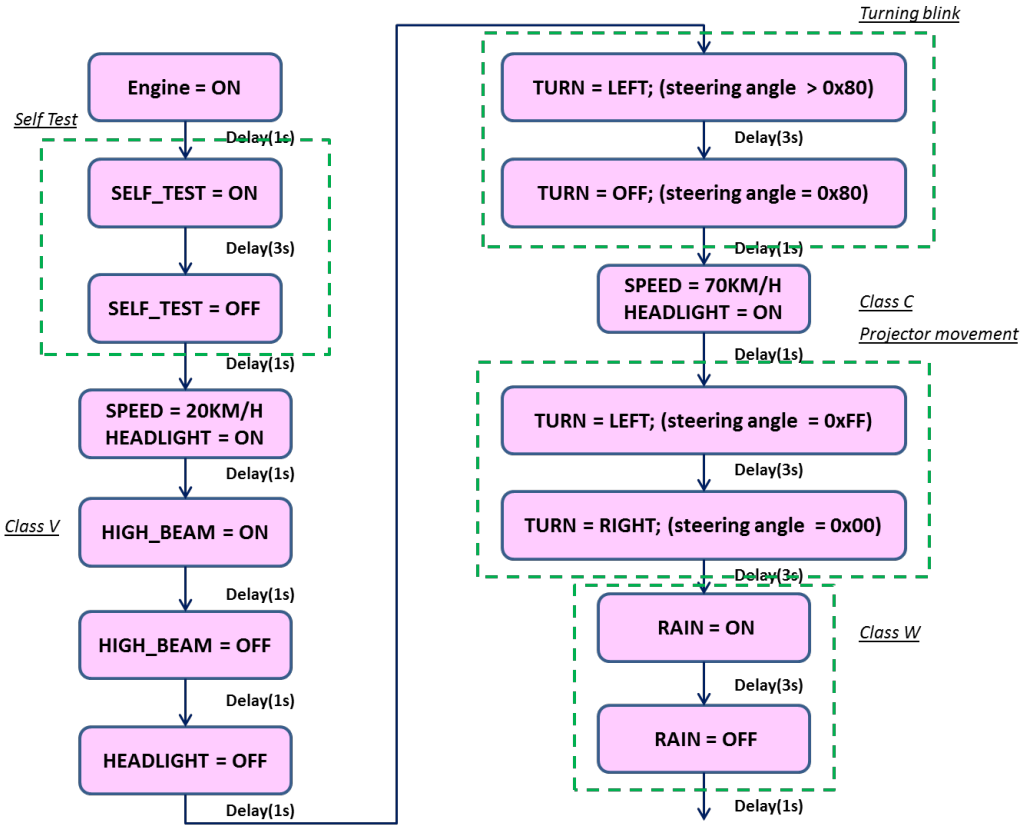
Engine = ON
Self Test
Delay(1s)
SELF_TEST = ON
Delay(3s)
SELF_TEST = OFF
Delay(1s)
SPEED = 20KM/H
HEADLIGHT = ON
Delay(1s)
Class V
HIGH_BEAM = ON
Delay(1s)
HIGH_BEAM = OFF
Delay(1s)
HEADLIGHT = OFF
Delay(1s)
Turning blink
TURN = LEFT; (steering angle > 0x80)
Delay(3s)
TURN = OFF; (steering angle = 0x80)
Delay(1s)
SPEED = 70KM/H
HEADLIGHT = ON
Class C
Projector movement
Delay(1s)
TURN = LEFT; (steering angle = 0xFF)
Delay(3s)
TURN = RIGHT; (steering angle = 0x00)
Delay(3s)
RAIN = ON
Class W
Delay(3s)
RAIN = OFF
Delay(1s)

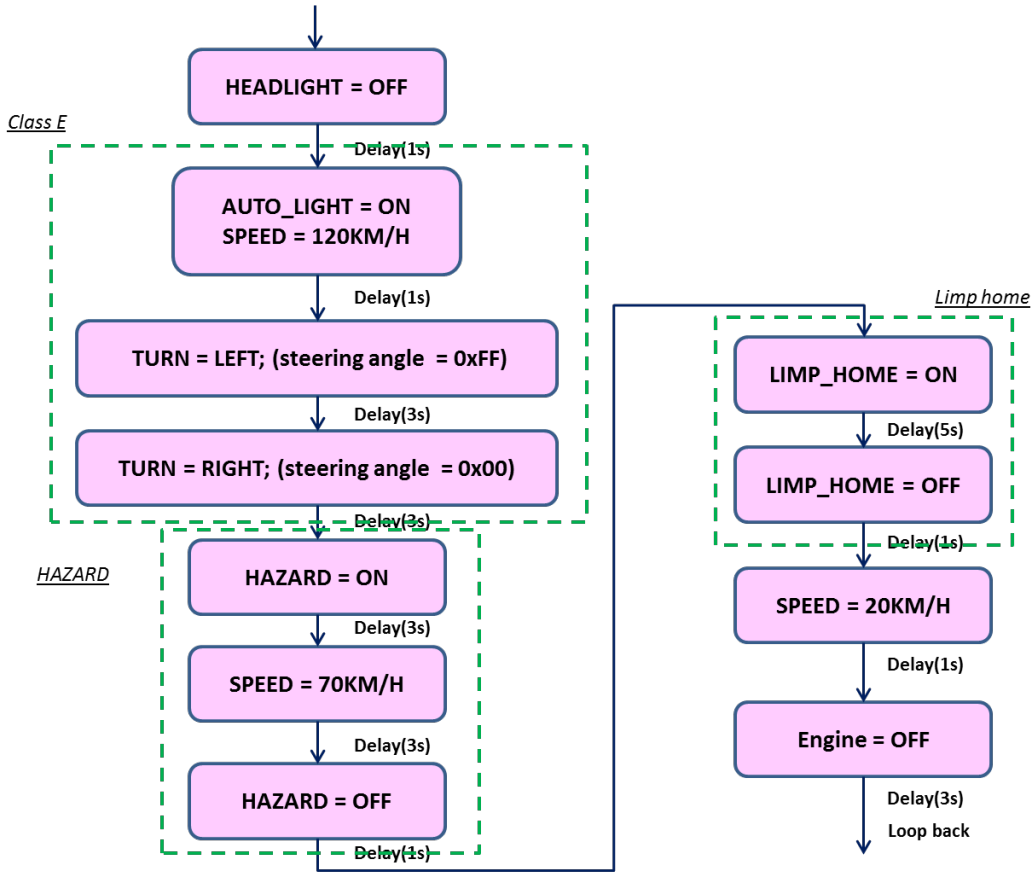

Self Test: This is a push-type button. When pressed, the LED backlight is turned on. It sends a self-test command to the AFS controller. To activate the self-test process, the **Self Test** button must be pressed within 5 seconds after the **Power** key switch is turned on.

The self-test sequence is performed with the sequence represented in the following flow chart:

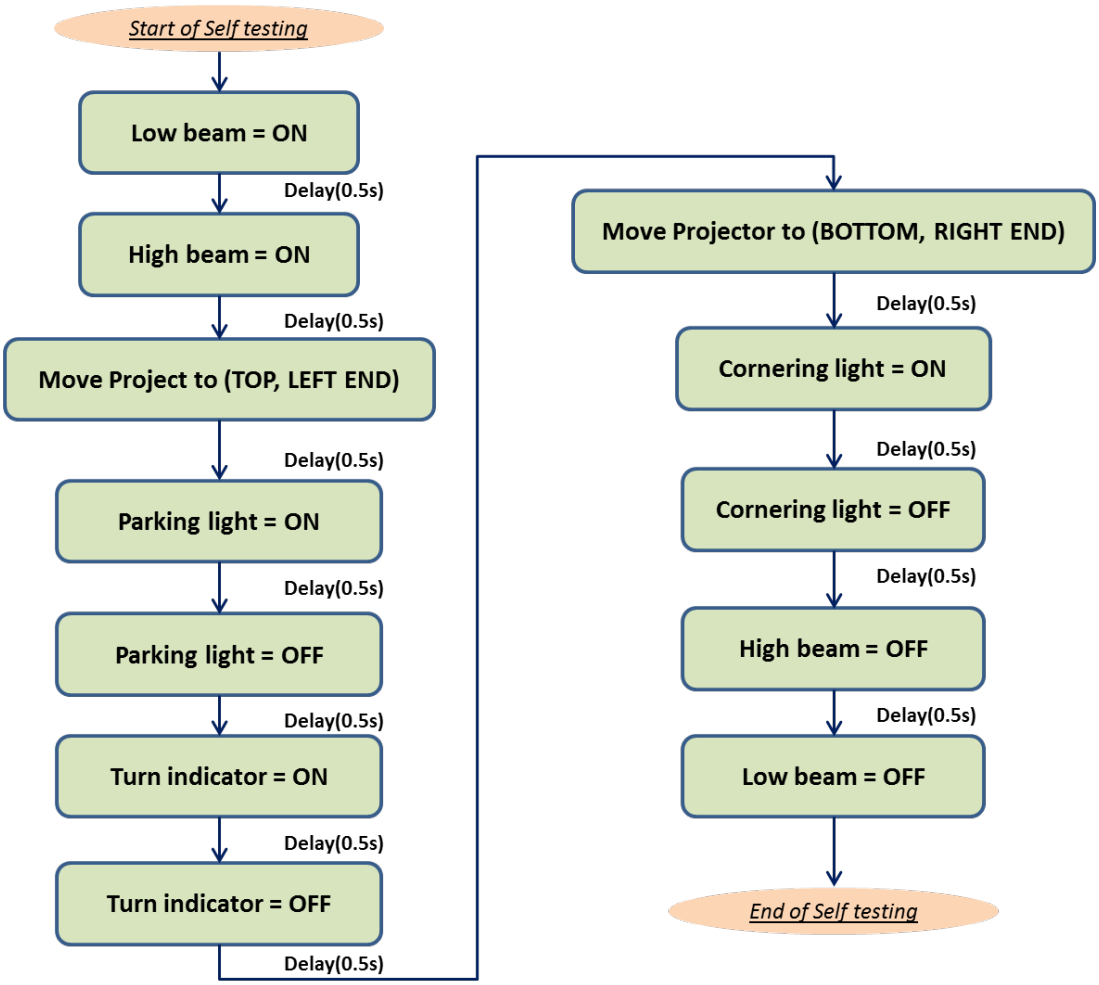

Limp Home: This is a push-type button. When pressed, the LED back light is turned on. It sends a limp home command to the AFS controller.

For a limp home function, the headlight is turned on with fixed (neutral) position. No adaption is performed.

Low Voltage: This is a push-type button. When pressed, the LED backlight is turned on. It sends a low-voltage command to the AFS controller.

This is a force command that indicates the battery in the vehicle is low. The AFS must perform status recording and go to sleep (standby).

Auto Light: This is a push-type button. When pressed, the LED backlight is turned on. It sends an automatic light command to the AFS controller.

When automatic light function is activated, the control panel sends the ambient light level data to the AFS controller through the CAN bus according to the light sensor equipped on the control panel. AFS controller detects the vehicle speed and the light level and determines whether to turn on the low beam or to turn it off.

Head Light: This is a push-type button. When pressed, the LED backlight is turned on. It sends a headlight command to the AFS controller.

This button activates and deactivates the low beam on the headlight unit.

High Beam: This is a push-type button. When pressed, the LED backlight is turned on. It sends a high-beam command to the AFS controller.

This button activates and deactivates the high beam on the headlight unit. When **High Beam** is activated, low beam is automatically activated. (In fact, high-beam control is performed only by turning on and off the high-beam shield.)

Rain: This is a push-type button. When pressed, the LED backlight is turned on. It sends a rain command to the AFS controller.

The rain signal is effective only in Class C and Class E light mode.

Hazard: This is a push-type button. When pressed, the LED backlight is turned on. It sends a hazard command to the AFS controller.

In the demonstration, Hazard has same function as “turn left”.

Turn switch: This is a 3-direction switch that indicates the left and right turn of the vehicle representing the steering column.

The three tuners are as follows:

Direction: This tuner is connected with a potentiometer on the control panel. The value represents the angle of the steering wheel of a car.

Speed: This tuner is connected with a potentiometer on the control panel. The value represents the speed of a car.

Tilt: This tuner is connected with a potentiometer on the control panel. The value represents the tilt level of a car.

The RS232 interface on the control panel is a component that is reserved for future use.

Display on the LCD screen of the control panel:

The LCD screen on the control panel displays the status of the AFS.

When the control panel is powered on, the TI logo and **AFS Demo** are displayed.

A few seconds after starting up, the main screen displays, as shown in Figure 19:

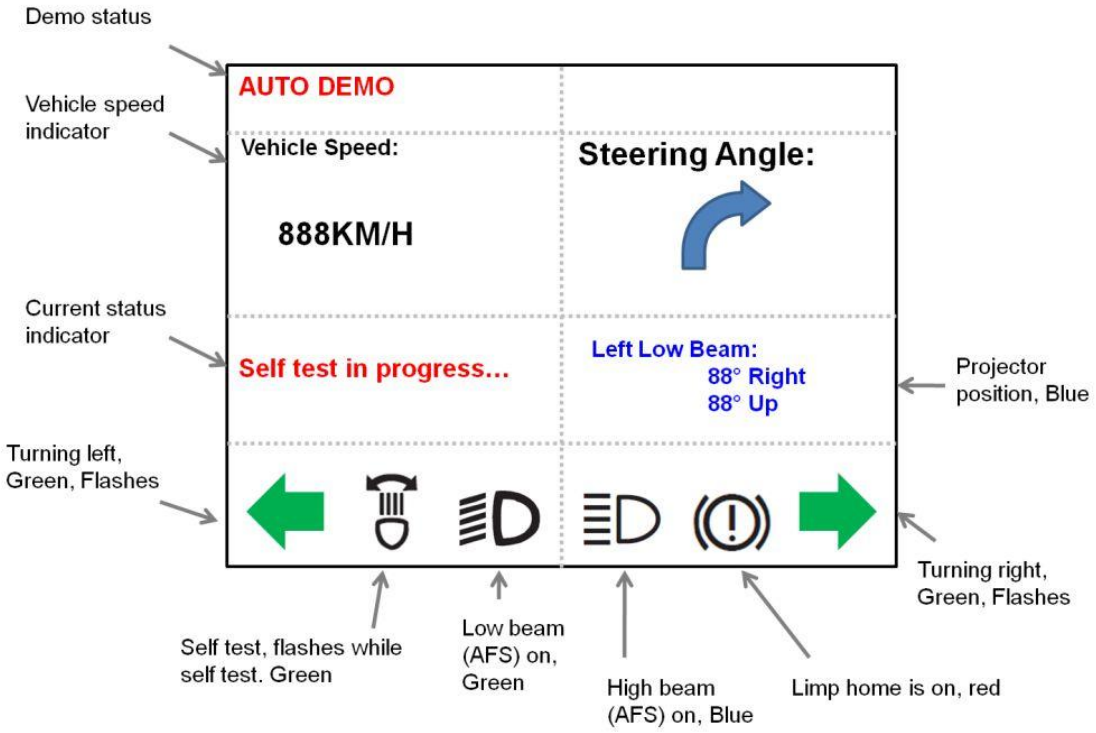

Figure 19. LCD Screen Display

Three LEDs are mounted on the control panel to indicate the status of 12-V, 5-V, and 3.3-V power supply.

3.1.3 Starting the Demo

When the demo is powered for the first time, the projector is moved to each end of the position range and comes back to the neutral position.

The recommended operation sequence follows:

1. Power the demo, and wait for the position of the projector to reset.
2. Turn on the **Power** key switch. The parking light is automatically on.
3. Activate **Self Test** within 5 seconds and check the self-test operation of the system.
4. Deactivate **Self Test** and rotate the **Turn** switch left, or press **Hazard** and check the operation of the turning indicator.
5. Deactivate the turning indicator.
6. Turn on **Head Light**, and the low beam is on. Project adjusts its position as in Class V (speed is less than 50 km/h.)
7. Keep vehicle speed less than 40 km/h and turn the steering wheel (**Direction**) to left. Cornering light is on automatically.

8. Turn **Direction** back to straight and accelerate to a speed between 50 and 100 km/h. Project adjusts its position as in Class C.
9. Turn **Direction** to left or right to see the movement of the projector.
10. Turn **Tilt** up or down to see the movement of the projector.
11. Accelerate the speed to a value greater than 120 km/h, and the projector adjusts its position as in Class E.
12. Turn on **Rain** so that the projector adjusts its position as in Class W.
13. Turn on and off **High Beam** to check the operation of the high-beam shield.
14. Set the speed back to a value between 50 to 100 km/h.
15. Turn off high beam and low beam, then turn on **Auto Light**.

    To turn off low beam, set car speed lower than 100 km/h and light up the light sensor (for example, by a flash light) at the same time and wait for 5 seconds.
16. Cover the light sensor to check the low beam turning on automatically, or raise the speed to a value greater than 100 km/h.
17. Activate **Limp Home** to check that the projector goes to a neutral position and being turned on.
18. Activate **Auto Demo** to check the automatic demo sequence.
19. Turn off the **Power** key switch.
20. Disconnect the demo from the battery. (Even when the demo is turned off by the **Power** key switch, all control boards are in STANDBY mode but not powered off.)

4 References

1. *UNIFORM PROVISIONS CONCERNING THE APPROVAL OF ADAPTIVE FRONT-LIGHTING SYSTEMS (AFS) FOR MOTOR VEHICLES*, E/ECE/324, Regulation No.123. 2 February 2007
2. ISO7637, part 2. *Road vehicles — Electrical disturbances from conduction and coupling. Part 2: Electrical transient conduction along supply lines only*. Second Edition, 1 July 2007
3. ISO16750, part 1 and part 2. *Road vehicles — Environmental conditions and testing for electrical and electronic equipment.* Part 1: General, Part 2: Electrical Load. Second Edition, 1 August 2006
4. GB21259-2007, *Headlamps equipped with gas-discharge light sources for motor vehicle*. 1 June 2008
5. *A Hardware and Software Framework for Automotive Intelligent Lighting.* Marko Heiko Hörter and Christoph Stiller, 2009

A.1 Schematics

A.1.1 AFS Controller Schematics

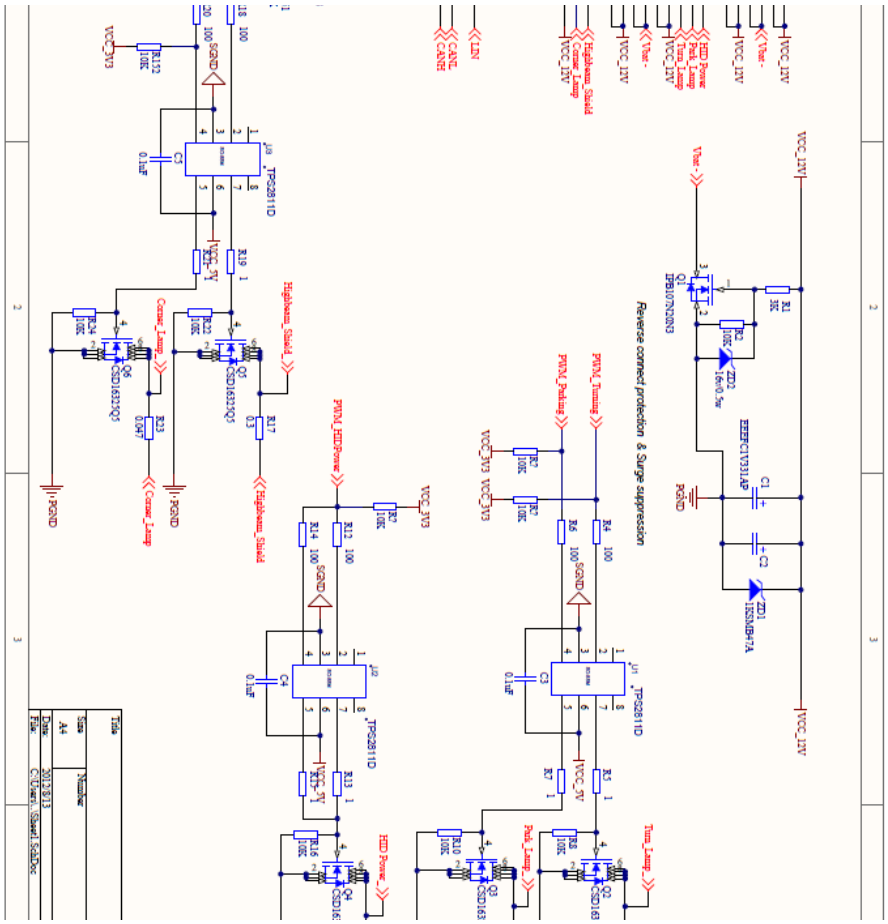

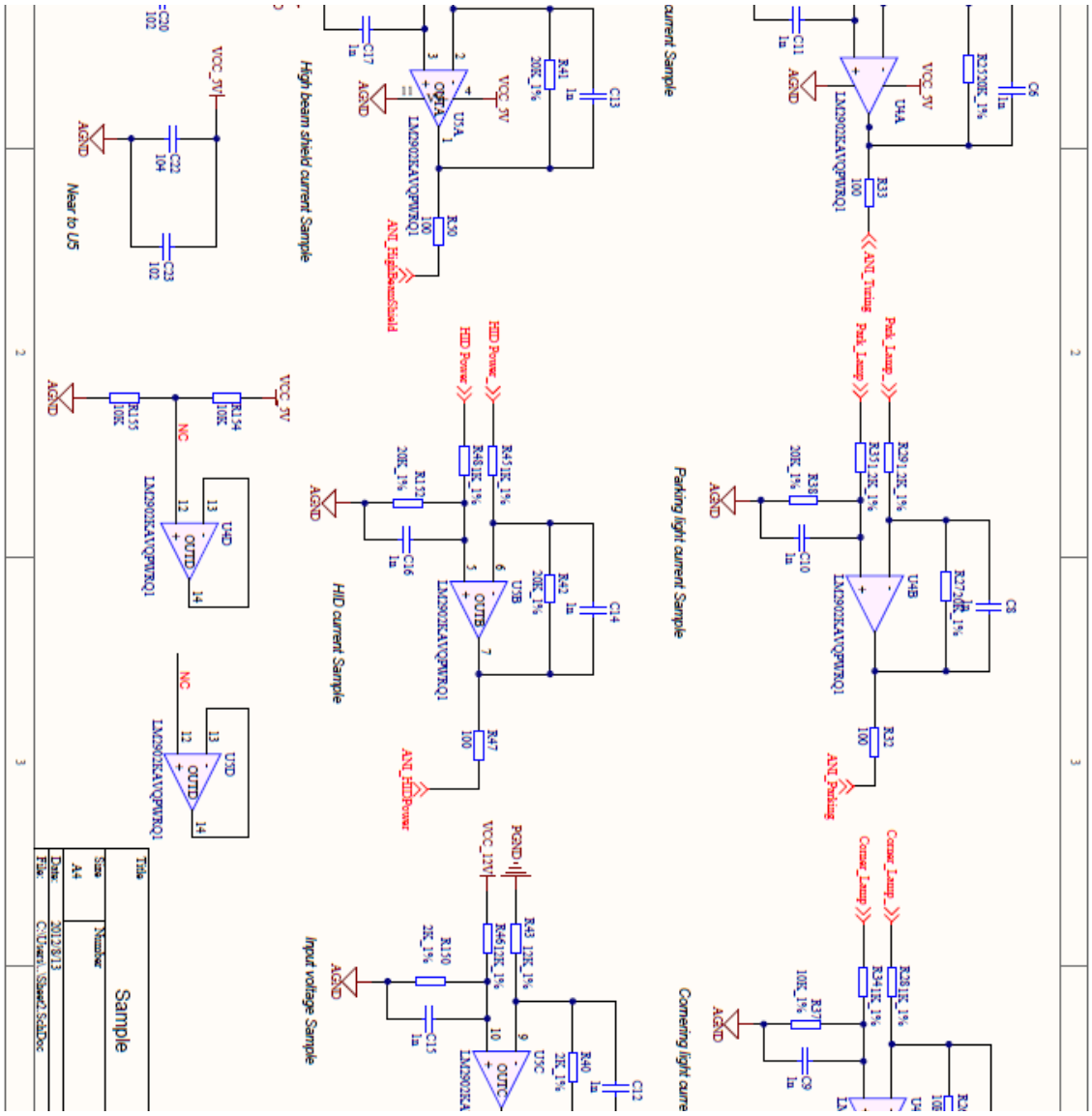
Parking light current Sample
Cornering light current Sample
High beam shield current Sample
HID current Sample
Input voltage Sample
Near to U5
Sample

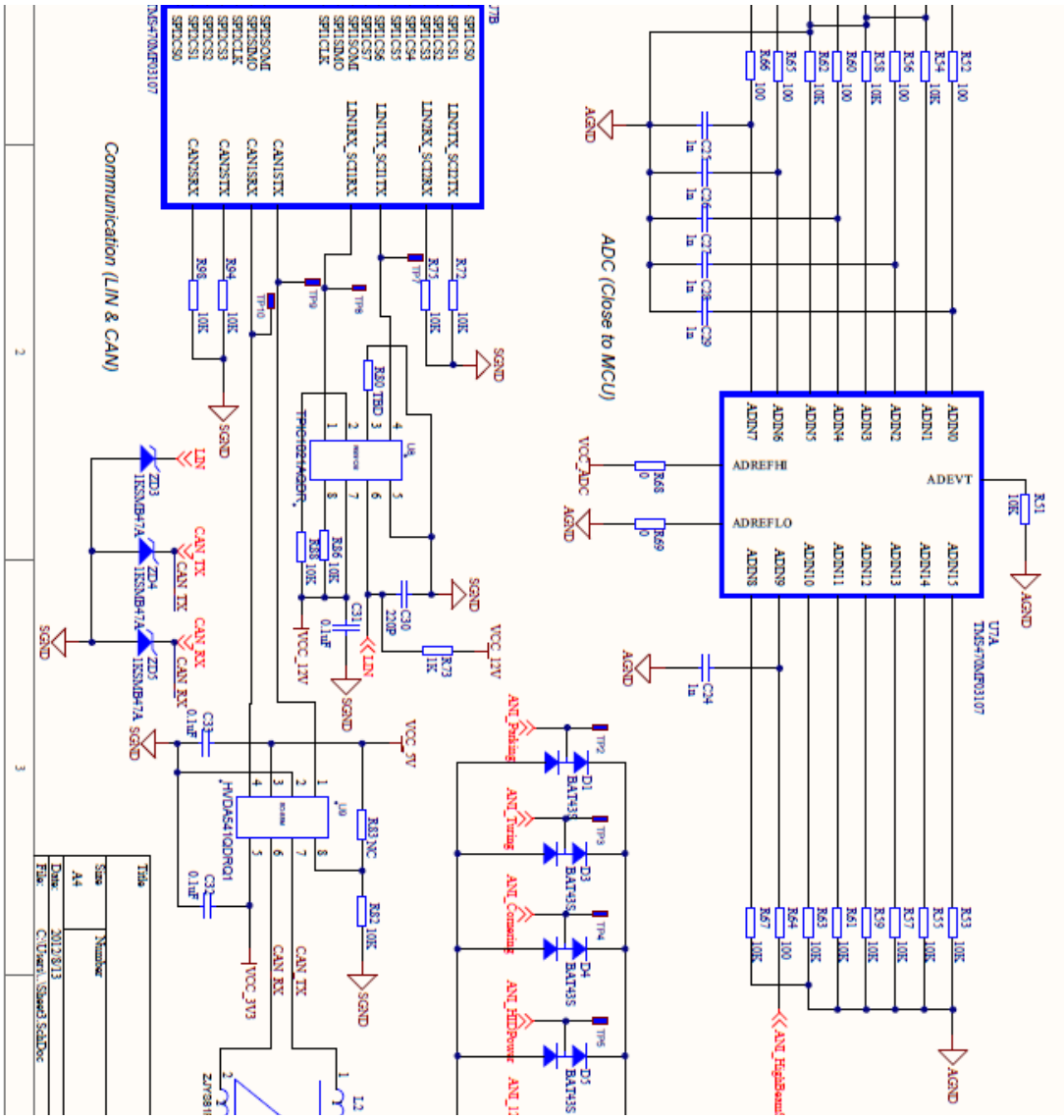
Communication (LIN & CAN)
ADC (Close to MCU)
U7A
TMS470MF03107
ADREFHI
ADREFLO
ADEVT
AGND
SGND
VCC_ADC
VCC_12V
VCC_5V
VCC_3V3
LIN
CAN_TX
CAN_RX
ANI_Parking
ANI_Turing
ANI_Cornering
ANI_HIDPower
ANI_HighBeam

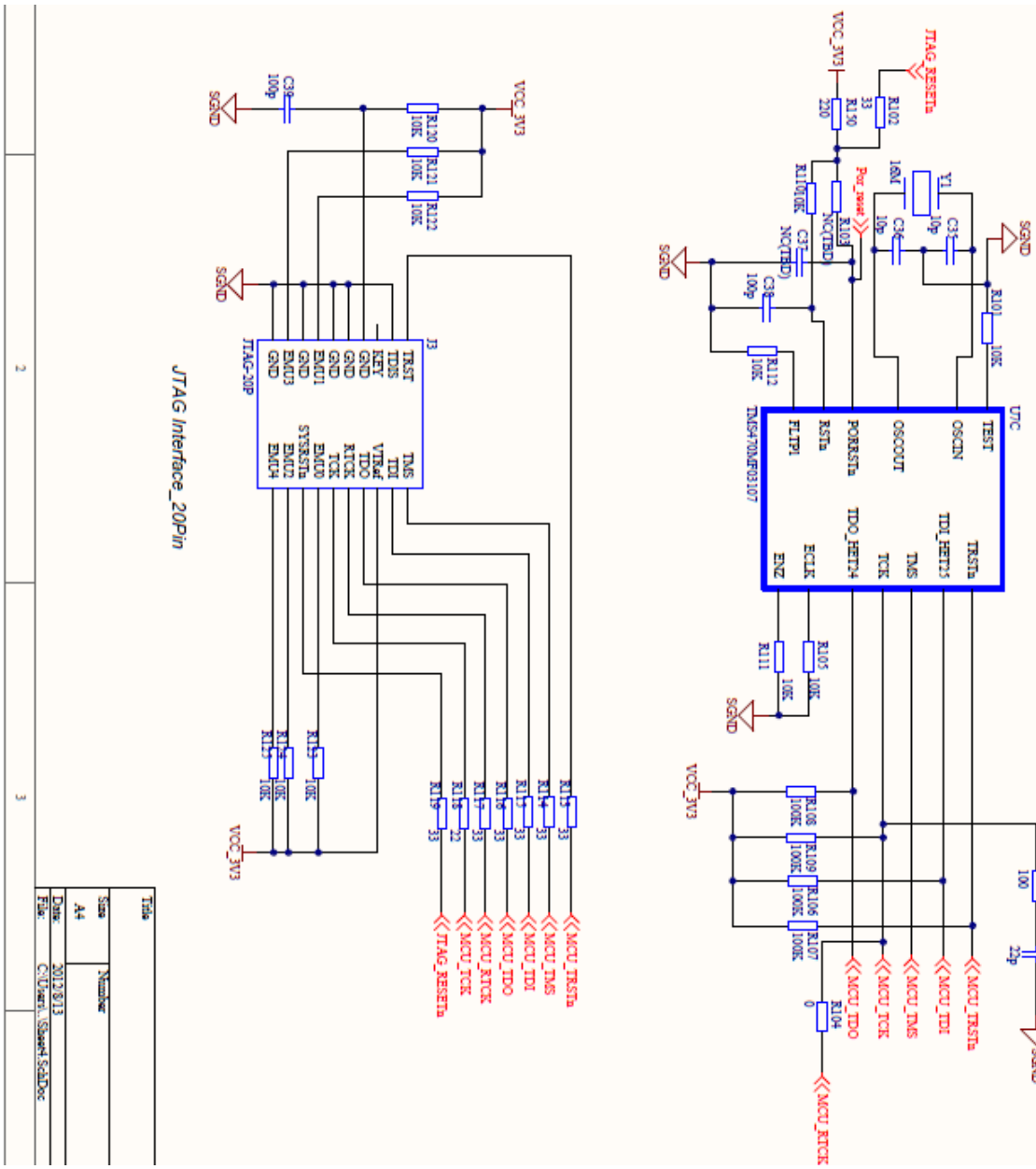
JTAG Interface_20Pin
J3
JTAG-20P
U7C
TMS470MF03107
VCC_3V3
SGND
JTAG_RESETn
MCU_TRSTn
MCU_TMS
MCU_TDI
MCU_TDO
MCU_RTCK
MCU_TCK
Title
Size
Number
A4
Date:
2012/8/13
File:
C:\Users\...\Sheet4.SchDoc

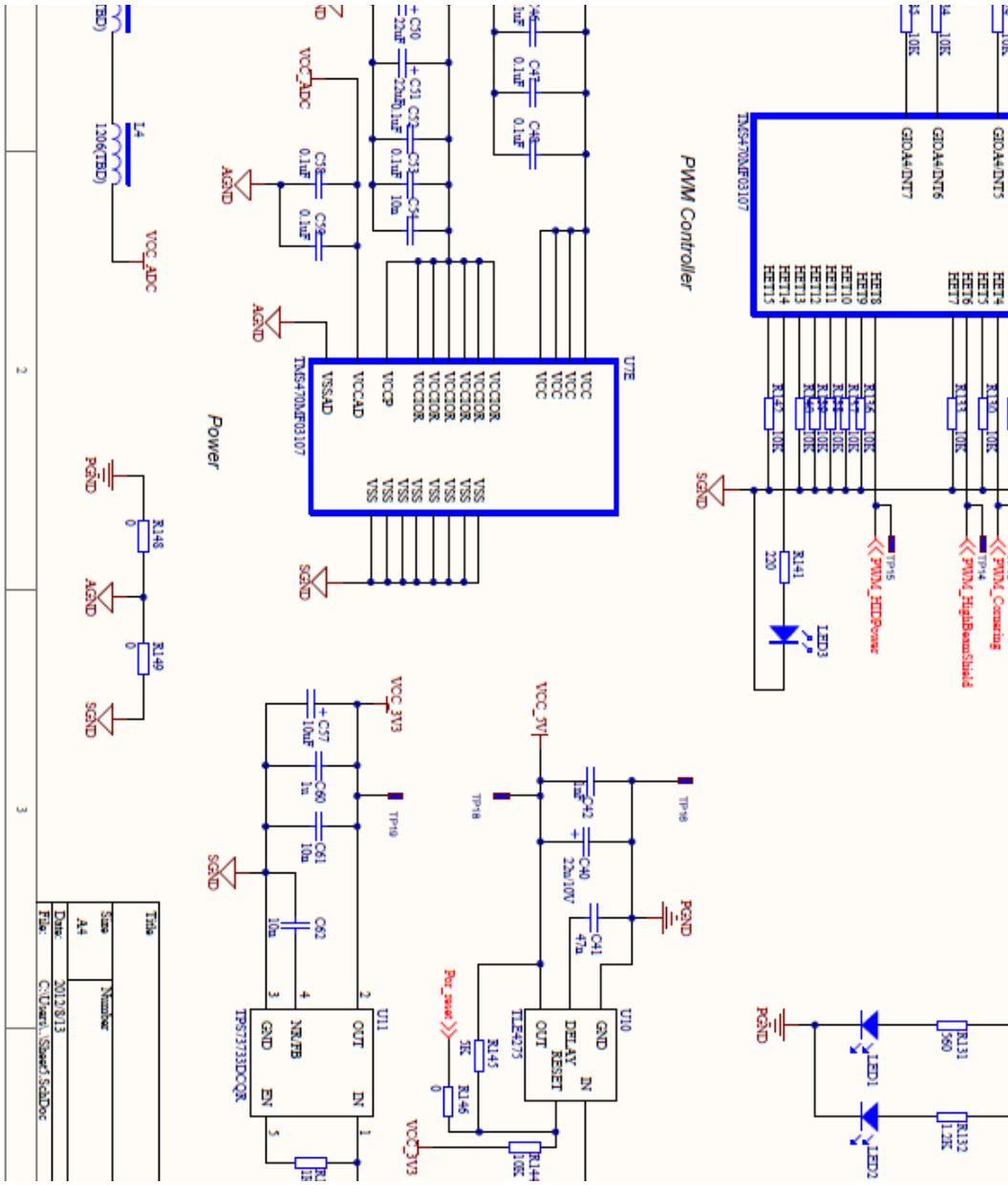
PWM Controller
Power
TMS470MF03107
U7E
U10
U11
TLE4275
TPS73733DCQR
PWM_HIDPower
PWM_HighBeamShield
PWM_Cornering
Title
Size
Number
A4
Date:
2012/8/13
File:
C:\Users\...\Sheet5.SchDoc

A.1.2 AFS Slave Schematics

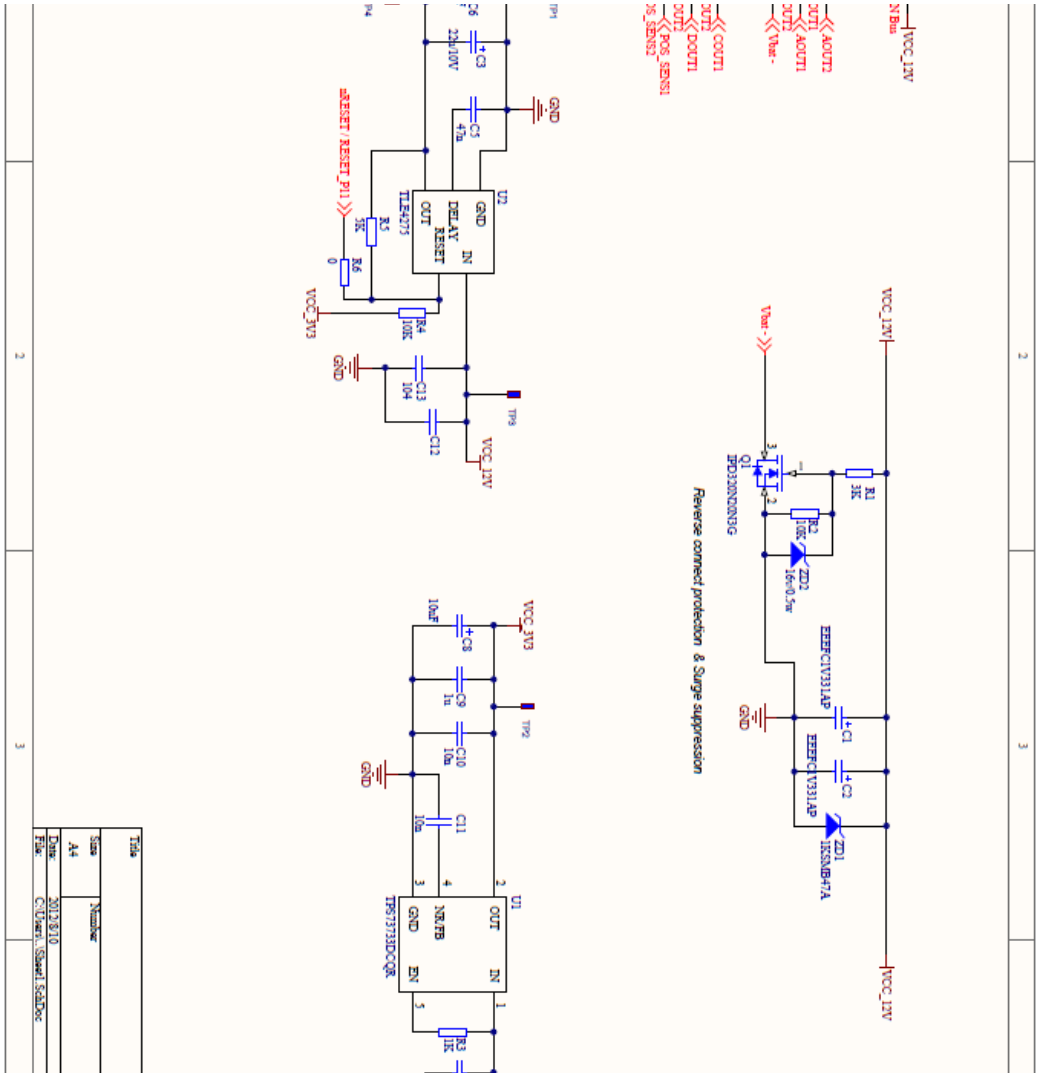

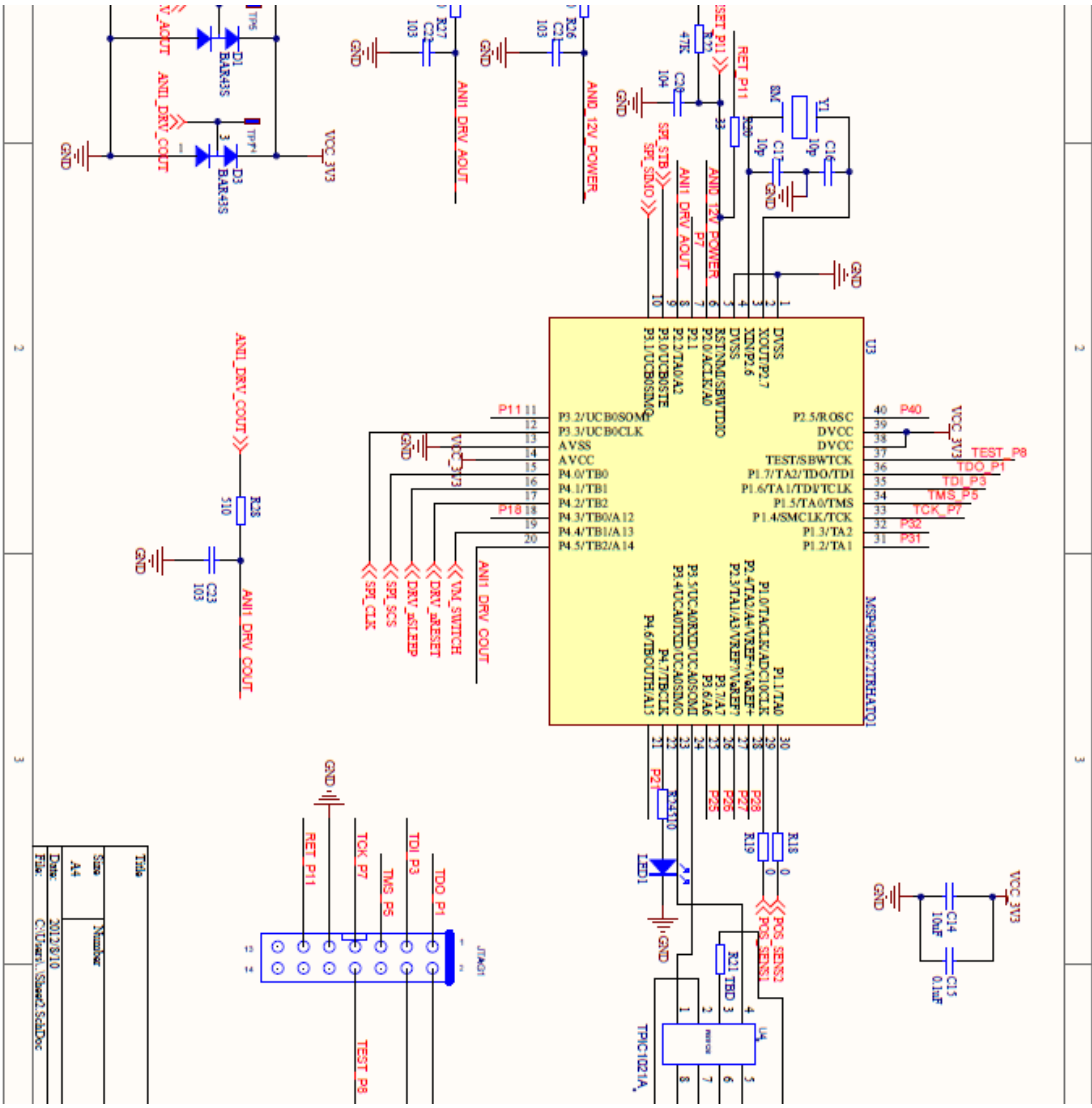
U3
MSP430F2272TRHATQ1
P3.2/UCB0SOMI
P3.3/UCB0CLK
AVSS
AVCC
P4.0/TB0
P4.1/TB1
P4.2/TB2
P4.3/TB0/A12
P4.4/TB1/A13
P4.5/TB2/A14
P2.5/ROSC
DVCC
DVCC
TEST/SBWTCK
P1.7/TA2/TDO/TDI
P1.6/TA1/TDI/TCLK
P1.5/TA0/TMS
P1.4/SMCLK/TCK
P1.3/TA2
P1.2/TA1
ANI1_DRV_AOUT
ANI1_DRV_COUT
AND_12V_POWER
VCC_3V3
TEST_P8
TDO_P1
TDI_P3
TMS_P5
TCK_P7
RET_P11
TPIC1021A
JTAG1
Title
Size
A4
Number
Date:
2012/8/10
File:
C:\Users\...\Sheet2.SchDoc

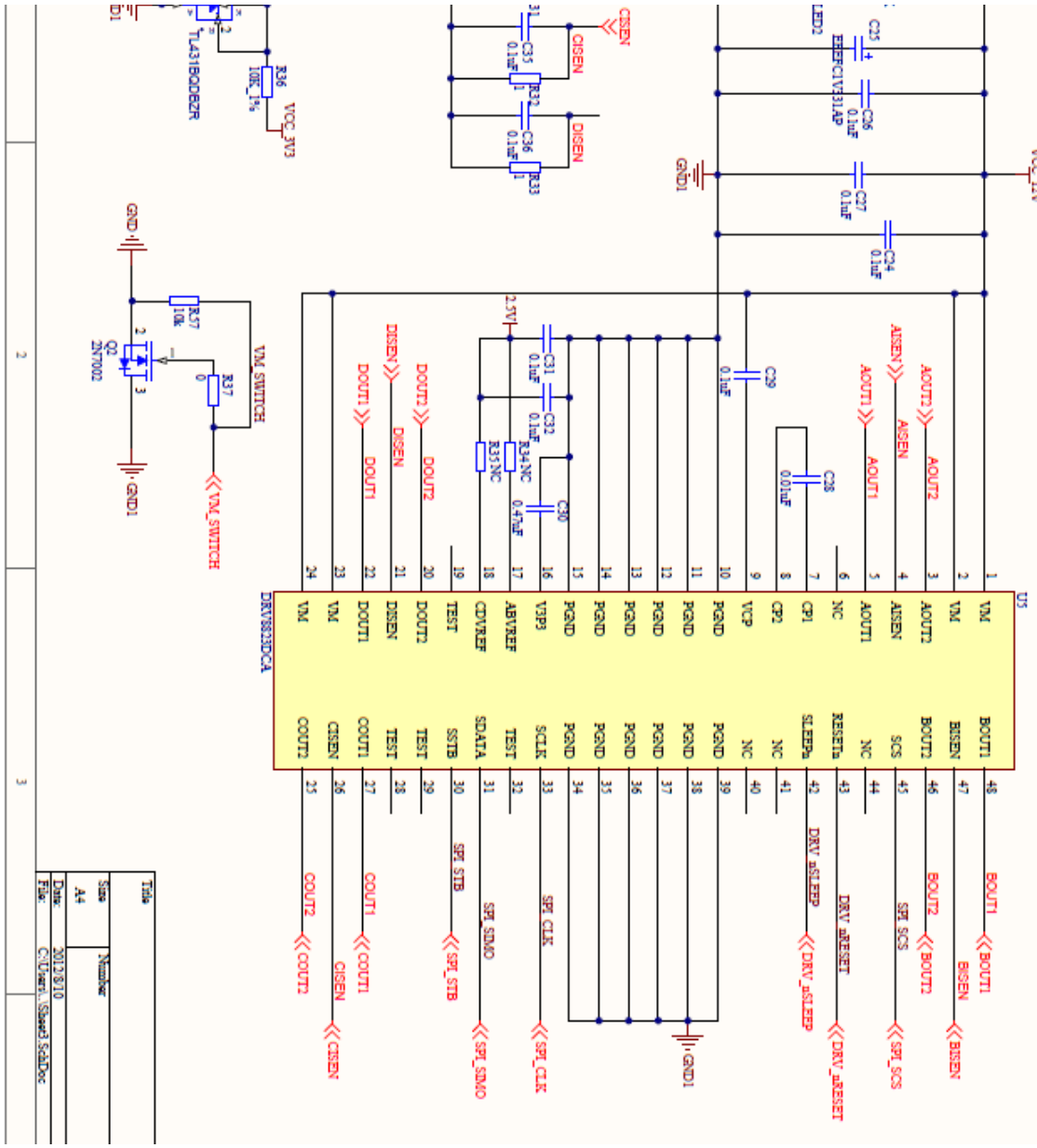
U5
DRV8823DCA
VM
BOUT1
BISEN
BOUT2
SCS
NC
RESETn
SLEEPn
CP1
CP2
VCP
PGND
AOUT1
AISEN
AOUT2
DOUT1
DISEN
DOUT2
TEST
CDVREF
ABVREF
V3P3
SDATA
SSTB
SCLK
COUT1
COUT2
CISEN
SPI_STB
SPI_SIMO
SPI_CLK
DRV_nSLEEP
DRV_nRESET
SPI_SCS
GND1
VCC_3V3
VM_SWITCH
Q2
2N7002
TL431BQDBZR
Title
Size
Number
A4
Date:
2012/8/10
File:
C:\Users\...\Sheet3.SchDoc

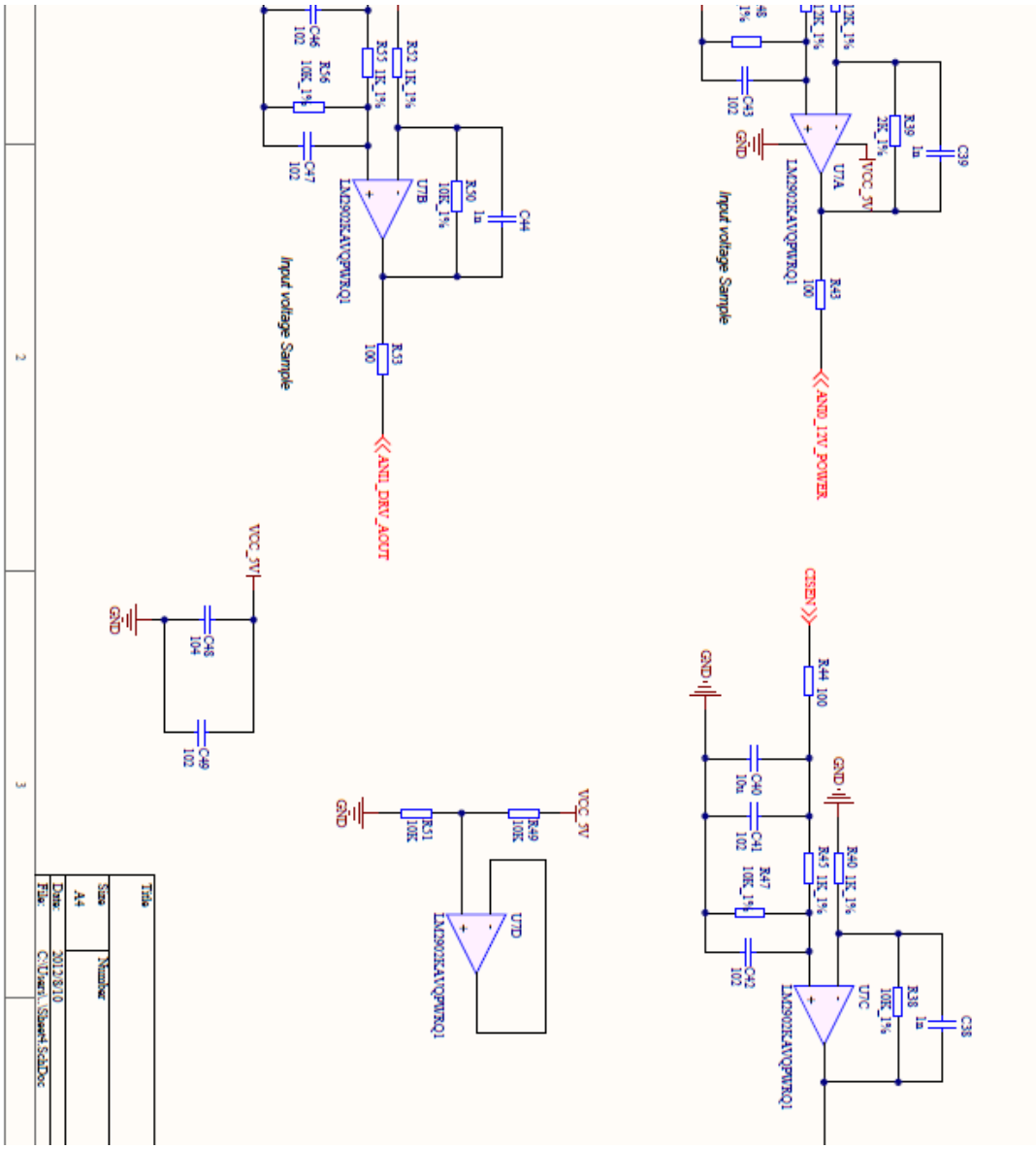
Input voltage Sample
Input voltage Sample
LM2902KAVQPWRQ1
LM2902KAVQPWRQ1
LM2902KAVQPWRQ1
LM2902KAVQPWRQ1
LM2902KAVQPWRQ1
ANI1_DRV_AOUT
ANI0_12V_POWER
CISEN
VCC_5V
GND
Title
Size
A4
Number
Date:
File:

IMPORTANT NOTICE

Texas Instruments Incorporated and its subsidiaries (TI) reserve the right to make corrections, enhancements, improvements and other changes to its semiconductor products and services per JESD46, latest issue, and to discontinue any product or service per JESD48, latest issue. Buyers should obtain the latest relevant information before placing orders and should verify that such information is current and complete. All semiconductor products (also referred to herein as “components”) are sold subject to TI’s terms and conditions of sale supplied at the time of order acknowledgment.

TI warrants performance of its components to the specifications applicable at the time of sale, in accordance with the warranty in TI’s terms and conditions of sale of semiconductor products. Testing and other quality control techniques are used to the extent TI deems necessary to support this warranty. Except where mandated by applicable law, testing of all parameters of each component is not necessarily performed.

TI assumes no liability for applications assistance or the design of Buyers’ products. Buyers are responsible for their products and applications using TI components. To minimize the risks associated with Buyers’ products and applications, Buyers should provide adequate design and operating safeguards.

TI does not warrant or represent that any license, either express or implied, is granted under any patent right, copyright, mask work right, or other intellectual property right relating to any combination, machine, or process in which TI components or services are used. Information published by TI regarding third-party products or services does not constitute a license to use such products or services or a warranty or endorsement thereof. Use of such information may require a license from a third party under the patents or other intellectual property of the third party, or a license from TI under the patents or other intellectual property of TI.

Reproduction of significant portions of TI information in TI data books or data sheets is permissible only if reproduction is without alteration and is accompanied by all associated warranties, conditions, limitations, and notices. TI is not responsible or liable for such altered documentation. Information of third parties may be subject to additional restrictions.

Resale of TI components or services with statements different from or beyond the parameters stated by TI for that component or service voids all express and any implied warranties for the associated TI component or service and is an unfair and deceptive business practice. TI is not responsible or liable for any such statements.

Buyer acknowledges and agrees that it is solely responsible for compliance with all legal, regulatory and safety-related requirements concerning its products, and any use of TI components in its applications, notwithstanding any applications-related information or support that may be provided by TI. Buyer represents and agrees that it has all the necessary expertise to create and implement safeguards which anticipate dangerous consequences of failures, monitor failures and their consequences, lessen the likelihood of failures that might cause harm and take appropriate remedial actions. Buyer will fully indemnify TI and its representatives against any damages arising out of the use of any TI components in safety-critical applications.

In some cases, TI components may be promoted specifically to facilitate safety-related applications. With such components, TI’s goal is to help enable customers to design and create their own end-product solutions that meet applicable functional safety standards and requirements. Nonetheless, such components are subject to these terms.

No TI components are authorized for use in FDA Class III (or similar life-critical medical equipment) unless authorized officers of the parties have executed a special agreement specifically governing such use.

Only those TI components which TI has specifically designated as military grade or “enhanced plastic” are designed and intended for use in military/aerospace applications or environments. Buyer acknowledges and agrees that any military or aerospace use of TI components which have ***not*** been so designated is solely at the Buyer's risk, and that Buyer is solely responsible for compliance with all legal and regulatory requirements in connection with such use.

TI has specifically designated certain components as meeting ISO/TS16949 requirements, mainly for automotive use. In any case of use of non-designated products, TI will not be responsible for any failure to meet ISO/TS16949.

Products		**Applications**	
Audio	www.ti.com/audio	Automotive and Transportation	www.ti.com/automotive
Amplifiers	amplifier.ti.com	Communications and Telecom	www.ti.com/communications
Data Converters	dataconverter.ti.com	Computers and Peripherals	www.ti.com/computers
DLP® Products	www.dlp.com	Consumer Electronics	www.ti.com/consumer-apps
DSP	dsp.ti.com	Energy and Lighting	www.ti.com/energy
Clocks and Timers	www.ti.com/clocks	Industrial	www.ti.com/industrial
Interface	interface.ti.com	Medical	www.ti.com/medical
Logic	logic.ti.com	Security	www.ti.com/security
Power Mgmt	power.ti.com	Space, Avionics and Defense	www.ti.com/space-avionics-defense
Microcontrollers	microcontroller.ti.com	Video and Imaging	www.ti.com/video
RFID	www.ti-rfid.com		
OMAP Applications Processors	www.ti.com/omap	**TI E2E Community**	e2e.ti.com
Wireless Connectivity	www.ti.com/wirelessconnectivity		

Mailing Address: Texas Instruments, Post Office Box 655303, Dallas, Texas 75265
Copyright © 2013, Texas Instruments Incorporated